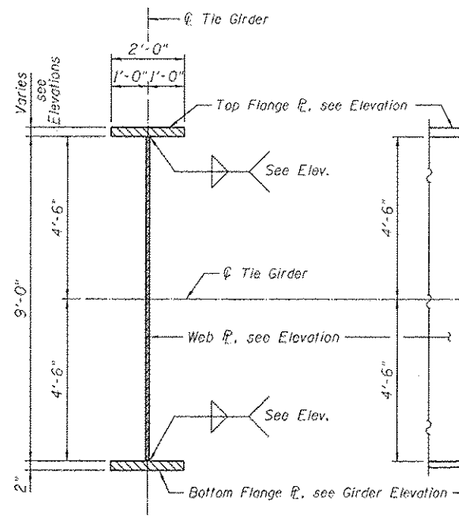

TYPICAL SECTION THRU TIE GIRDER

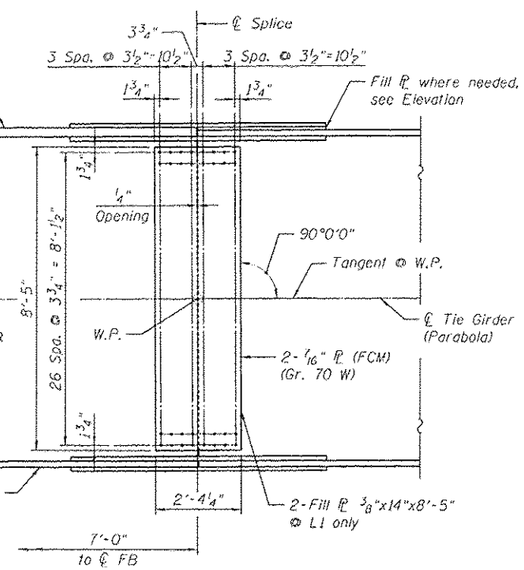

TYPICAL WEB SPLICE PLATE DETAIL

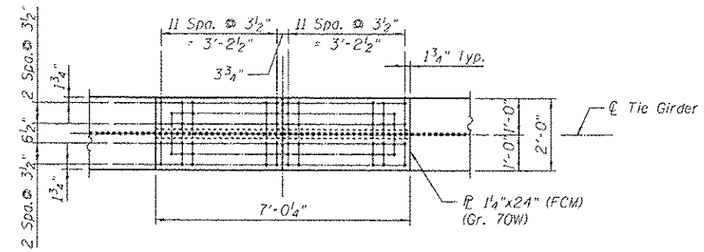

TYPICAL OUTER FLANGE SPLICE PLATE DETAIL

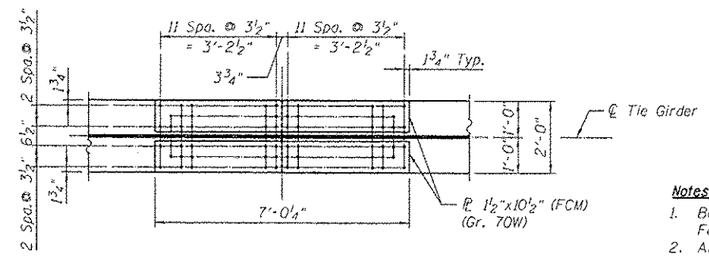

TYPICAL INNER FLANGE SPLICE PLATE DETAIL

Notes:

1. Bolts 1 in. ϕ. holes 1 1/16 in. ϕ. unless otherwise noted. Faying surfaces shall be Class B.
2. All structural steel shall be AASHTO M 270 Grade 50 except steel plates indicated (Gr. 70W) which shall be AASHTO M 270 Grade HPS 70W.
3. "FCM" denotes Fracture Critical Member or Member Component.
4. Load carrying components designated "NTR" shall conform to the Impact Testing Requirement, Zone 2.
5. For Hanger connection details, see Sht. S-79.
6. For Floor Beam to Tie Girder connection detail, see Sht. S-86.
7. For Lateral Bracing connection details, see Sht. S-91.

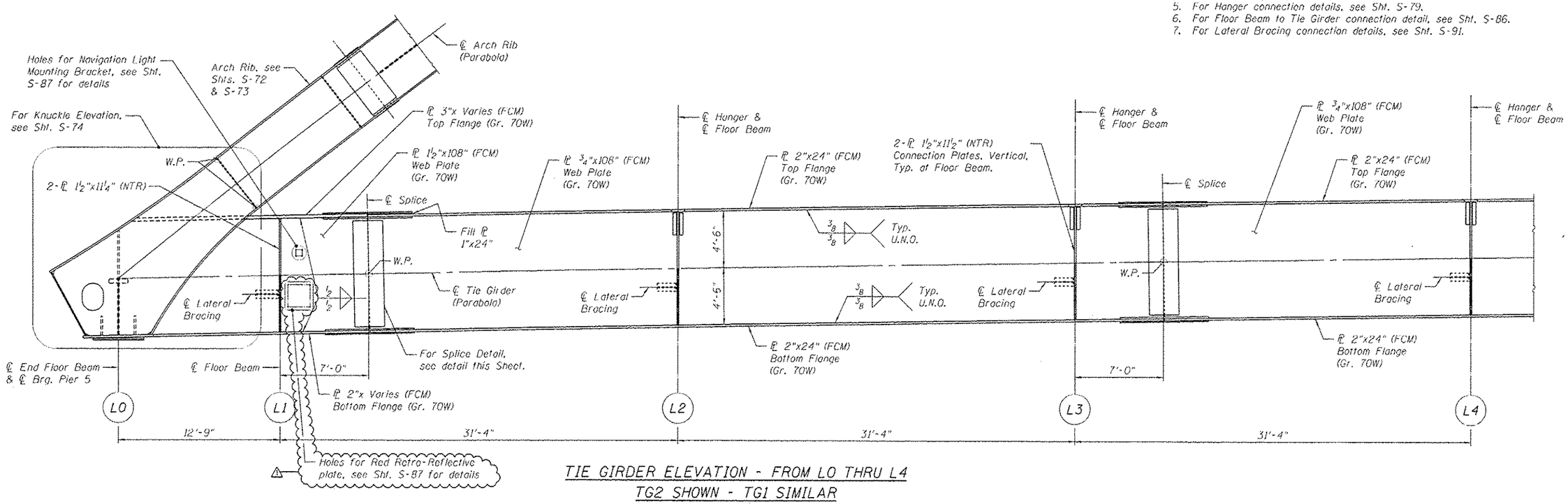

TIE GIRDER ELEVATION - FROM L0 THRU L4
TG2 SHOWN - TG1 SIMILAR

FILE NAME =	USER NAME =	DESIGNED - CCE	REVISED - ⚠ ADDENDUM NO. 1, 11/25/2014	STATE OF ILLINOIS DEPARTMENT OF TRANSPORTATION	TIE GIRDER ELEVATION 1 OF 2	F.A.P. RTE.	SECTION	COUNTY	TOTAL SHEETS / SHEET NO.
exp U.S. Services Inc. Chicago, IL BUILDINGS-EARTH & ENVIRONMENT-ENERGY INDUSTRIAL-INFRASTRUCTURE-SUSTAINABILITY	DATE - 11/25/2014	CHECKED - RSN	REVISED -			745	123B-2	MORGAN	782 / 451
	PLOT SCALE =	DRAWN - HBJ	REVISED -			SN 069-0525		CONTRACT NO. 72B58	
	PLOT DATE =	CHECKED - RSN	REVISED -		SHEET NO. S-70 OF 146 SHEETS	ILLINOIS FED. AID PROJECT			

-\\69\0525-72B58-222-STEELDETAIL.DGN, \\69\0525-72B58-222-STEELDETAIL.DGN, \\DALLSNJM-72B58-221-BORDER.DGN 11-17-2014, 1:14:53 PM STAGARS \\FS-B24A\MSVALL_TD-FNAVS_E7\PROJH\00121241-B2\STRUCT\CADD\72B58\069\0525\SHEET\069\0525-72B58-223-STEELDETAIL_SHT.DGN