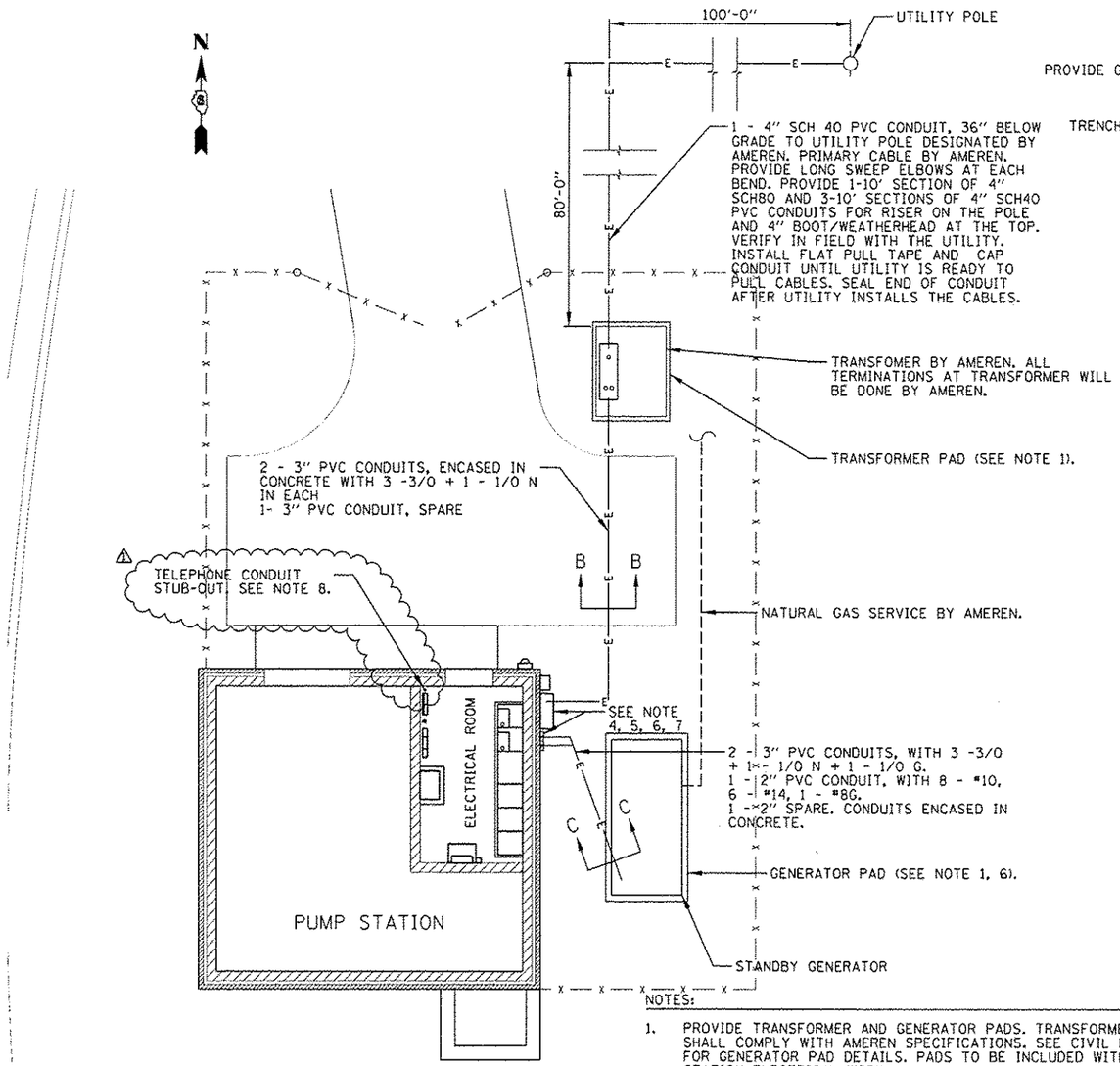

ELECTRICAL SITE PLAN

SCALE: 1" = 5'-0"

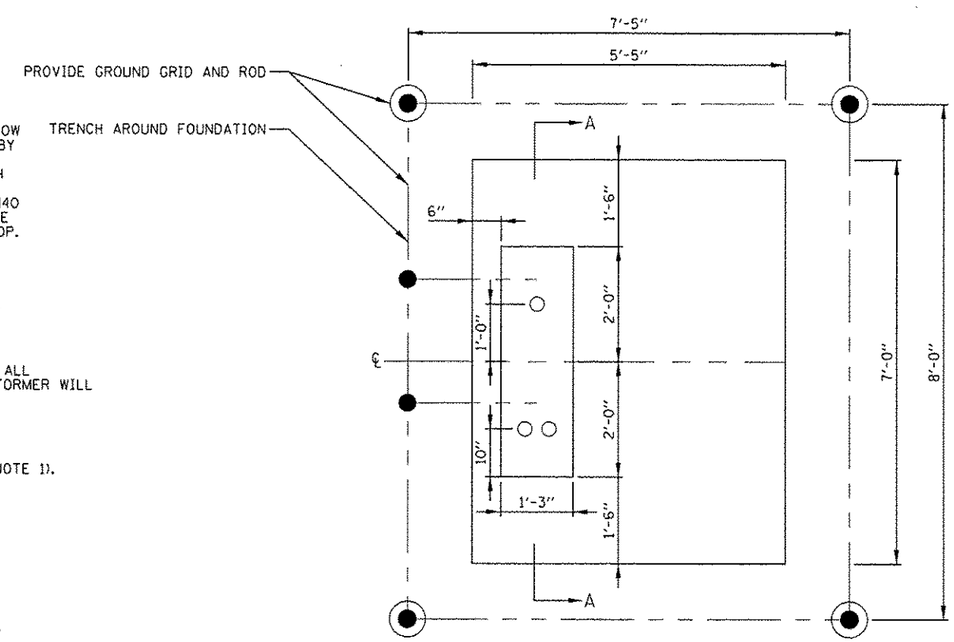

AMEREN TRANSFORMER PAD DETAIL

SCALE: NOT TO SCALE

NOTES:

1. SEE E-17 FOR GROUNDING CABLE CONNECTION DETAILS

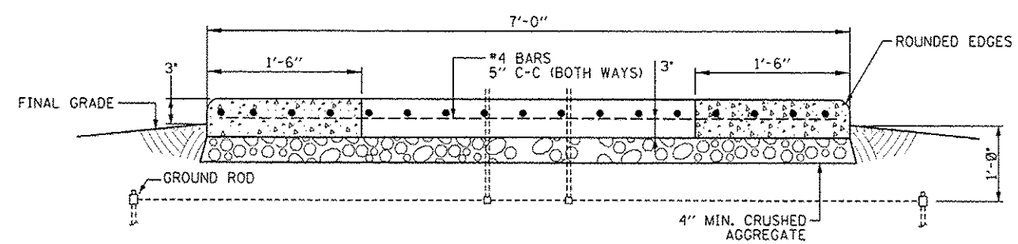

SECTION A-A

SCALE: NOT TO SCALE

NOTES:

1. PROVIDE TRANSFORMER AND GENERATOR PADS. TRANSFORMER PAD SHALL COMPLY WITH AMEREN SPECIFICATIONS. SEE CIVIL PLANS FOR GENERATOR PAD DETAILS. PADS TO BE INCLUDED WITH PUMP STATION ELECTRICAL WORK.
2. SEE E-17 & E-18 FOR GROUNDING PLANS AND DETAILS.
3. SEE E-16 FOR CT, PT, AND METER WIRING AND LAYOUT, AND WALL PENETRATION DETAILS.
4. PROVIDE CT, PT, AND METER CABINETS AND LB TYPE CONDUIT BODIES FOR GENERATOR FEEDERS AND CONTROL WIRING. COORDINATE THEIR LOCATION WITH THE SERVICE ENTRANCE EQUIPMENT IN MCC.
5. EXTEND CONDUITS TO MAIN & GEN COMPARTMENT, ATS, AP-1, AND CONTROL PANEL. PROVIDE CONDUIT SEALS IN THE WALL. SEE E-16 FOR DETAILS.
6. SEAL INSIDE OF CONDUITS WITH STEEL WOOL AND FLEXIBLE PUTTY TO PREVENT MICE INFESTATION.
7. STUB UP AND CAP SPARE CONDUITS AT BOTH ENDS.
8. COORDINATE WITH TELEPHONE COMPANY AND PROVIDE 2" PVC COATED RIGID STEEL DIRECT BURIED CONDUIT FROM THE UTILITY POLE SHOWN TO PUMP STATION.

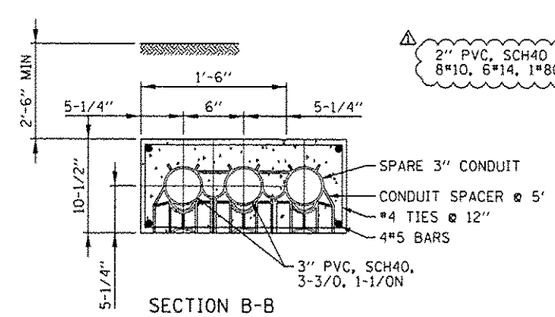

SECTION B-B

SCALE: NOT TO SCALE

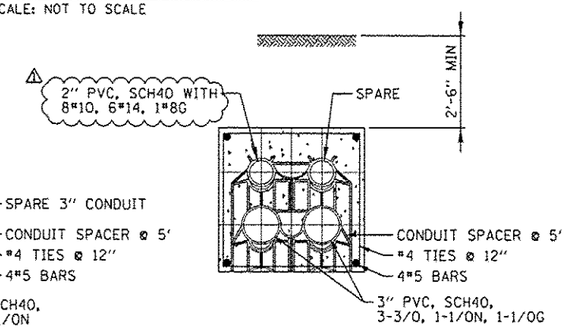

SECTION C-C

SCALE: NOT TO SCALE

FILE NAME = E-2.dgn	USER NAME = joburto	DESIGNED - RV	REVISED - ADDENDUM NO. 1 11/25/2014	STATE OF ILLINOIS DEPARTMENT OF TRANSPORTATION
		DRAWN - RV	REVISED -	
	PLOT SCALE = AS SHOWN	CHECKED - JC	REVISED -	
	PLOT DATE = 10/31/2014	APPROVED - JZ	REVISED -	

MILHOUSE ENGINEERING & CONSTRUCTION

IL-104 PUMP STATION
ELECTRICAL SITE PLAN AND DETAILS

F.A. RTE.	SECTION	COUNTY	TOTAL SHEETS	SHEET NO.
745	123B-2	MORGAN	782	631
		CONTRACT NO. 72B58		

SCALE: | SHEET NO. E-2 OF 18 SHEETS | STA. TO STA. | FED. ROAD DIST. NO. | ILLINOIS | FED. AID PROJECT