F.A.I. RTE.	SECTION	COUNTY	TOTAL SHEETS	SHEET NO.
80	FAI 80 21 VLS	WILL	467	1
	ILLINOIS	CONTRACT NO. 62R19		

02–27–2026 LETTING ITEM 005

STATE OF ILLINOIS
DEPARTMENT OF TRANSPORTATION

PROPOSED HIGHWAY PLANS

FAI ROUTE 80 (INTERSTATE 80)
RIDGE RD TO WHEELER AVE & GARDNER ST TO I–355
SECTION FAI 80 21 VLS
PROJECT NHPP–846T(970)
MISCELLANEOUS
VARIOUS COUNTIES

C–91–106–22

FOR INDEX OF SHEETS, SEE SHEET NO. 3

DESIGN DESIGNATION

I–80 – PRINCIPLE ARTERIAL SYSTEM INTERSTATE
4040(30) INTERSTATE 134.3 (CRC–20)

TRAFFIC DATA

I–80 (RIDGE RD TO I–55)
EXISTING ADT: 49,400 (2019)
DESIGN ADT: 69,600 (2040)

I–80 (I–55 TO HOUBOLT RD)
EXISTING ADT: 65,200 (2019)
DESIGN ADT: 93,900 (2040)

I–80 (HOUBOLT RD TO LARKIN AVE)
EXISTING ADT: 67,430 (2019)
DESIGN ADT: 90,100 (2040)

I–80 (LARKIN AVE TO CENTER ST)
EXISTING ADT: 83,640 (2019)
DESIGN ADT: 118,200 (2040)

I–80 (CHICAGO ST TO RICHARDS ST)
EXISTING ADT: 85,160 (2019)
DESIGN ADT: 130,500 (2040)

I–80 (RICHARDS ST TO BRIGGS ST)
EXISTING ADT: 79,480 (2019)
DESIGN ADT: 123,400 (2040)

I–80 (BRIGGS ST TO US 30)
EXISTING ADT: 75,700 (2019)
DESIGN ADT: 114,300 (2040)

I–80 (US 30 TO I–355)
EXISTING ADT: 64,700 (2024)

I–80 POSTED SPEED LIMIT (RIDGE RD TO LARKIN AVE): 70 MPH
I–80 POSTED SPEED LIMIT (LARKIN AVE TO US 30): 55 MPH
I–80 POSTED SPEED LIMIT (US 30 TO I–355): 65 MPH

D-91-205-19

LOCATION OF SECTION INDICATED THUS: –

PROJECT IS LOCATED IN VILLAGES OF SHOREWOOD, MINOOKA, ROCKDALE, NEW LENOX, AND CITY OF JOLIET

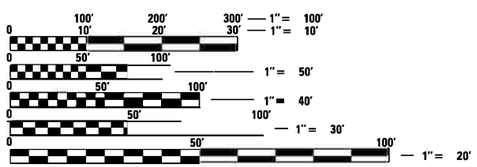

FULL SIZE PLANS HAVE BEEN PREPARED USING STANDARD ENGINEERING SCALES. REDUCED SIZED PLANS WILL NOT CONFORM TO STANDARD SCALES. IN MAKING MEASUREMENTS ON REDUCED PLANS, THE ABOVE SCALES MAY BE USED.

J.U.L.I.E.
JOINT UTILITY LOCATION INFORMATION FOR EXCAVATION
1-800-892-0123
OR 811

MEADE ELECTRIC CO.
DISTRICT ONE ELECTRICAL MAINTENANCE CONTRACTOR FOR LOCATING IDOT ELECTRICAL EQUIPMENT AND UNDERGROUND CABLES
773-287-7672

RANGE 8E TO 11E, 3RD PRINCIPAL MERIDIAN

ITS INFRASTRUCTURE OMISSION

N

TWP 35N

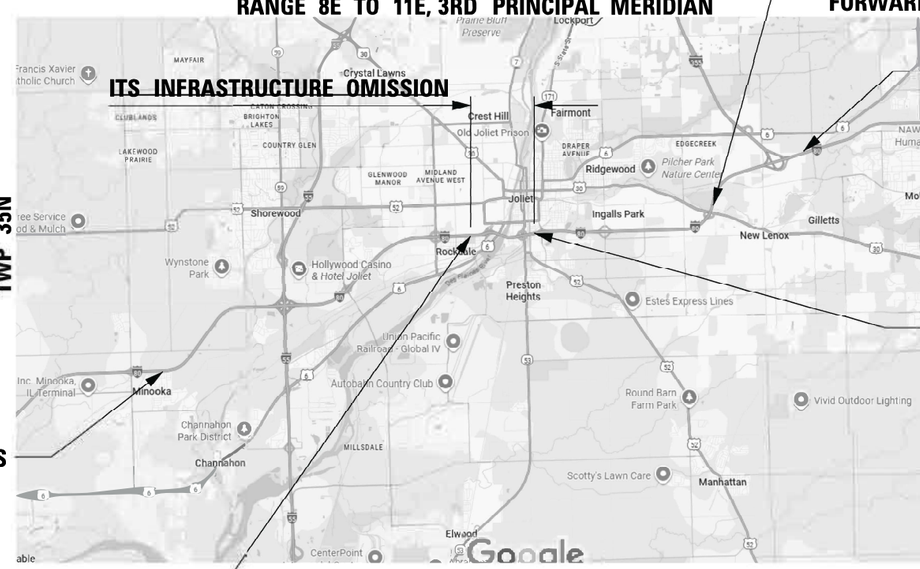

STATION EQUATION:
BACK STA. 969 + 98.08 =
FORWARD STA. 1706 + 89.75

I–80 WORK ENDS
STA. 1832 + 10.00

I–80 WORK BEGINS
STA. 719 + 00.00

I–80 WORK BEGINS
STA. 158 + 60.00

I–80 WORK ENDS
STA. 634 + 50.00

SCALE 1″ = 10,000′

GROSS LENGTH = 96,107 FT. = 18.20 MILES
NET LENGTH = 87,518 FT. = 16.58 MILES

exp.

ATLAS
ATLAS TECHNICAL CONSULTANTS, LLC
100 S. WACKER DRIVE, SUITE 400
CHICAGO, IL 60606

STATE OF ILLINOIS
DEPARTMENT OF TRANSPORTATION

SUBMITTED March 11th 2025 JR
REGIONAL ENGINEER

January 23 2026
ENGINEER OF DESIGN AND ENVIRONMENT

January 23 2026
DIRECTOR OF HIGHWAYS PROJECT IMPLEMENTATION

PROJECT ENGINEER: SUNG BYUN (847) 705–4288
PROJECT MANAGER: KIM HARVEY (847) 705–4055

CONTRACT NO. 62R19

PRINTED BY THE AUTHORITY OF THE STATE OF ILLINOIS

REV-SEP

FAI ROUTE 80 (INTERSTATE 80)
RIDGE AVE TO WHEELER AVE &
GARDNER ST TO I–355
SECTION FAI 80 21 VLS
PROJECT NHPP–846T(970)
MISCELLANEOUS
VARIOUS COUNTIES

C–91–106–22

THOMAS M. HOUGH
062.053719
LICENSED PROFESSIONAL ENGINEER OF ILLINOIS

SEAL

SIGNATURE: Thomas M. Hough

DATE SIGNED: 10–15–2025

LICENSE EXPIRATION DATE: 11–30–2027

THIS SEAL APPLIES TO SHEETS:
1 – 138, 142 – 146, 221 – 224, 253 – 301, 456, 465 – 467

DANIEL J. MEIER
062.068291
LICENSED PROFESSIONAL ENGINEER OF ILLINOIS

SEAL

SIGNATURE: Dan Meier

DATE SIGNED: 10–15–2025

LICENSE EXPIRATION DATE: 11–30–2027

THIS SEAL APPLIES TO SHEETS:
139 – 141, 147 – 220, 225 – 252, 321 – 455, 457 – 459, 461 – 462

WILLIAM D. STERMER
062.060936
LICENSED PROFESSIONAL ENGINEER OF ILLINOIS

SEAL

SIGNATURE: William D. Stermer

DATE SIGNED: 10–15–2025

LICENSE EXPIRATION DATE: 11–30–2027

THIS SEAL APPLIES TO SHEETS:
302 – 320, 460, 463 – 464

INDEX OF SHEETS

SHEET	DESCRIPTION
1	COVER SHEET
2	PROFESSIONAL SEALS
3	INDEX OF SHEETS AND STANDARDS
4	GENERAL NOTES
5 - 11	SUMMARY OF QUANTITIES
12 - 39	ALIGNMENT, TIES, AND BENCHMARKS
40 - 41	EROSION AND SEDIMENT CONTROL GENERAL NOTES & SCHEDULES
42 - 46	EROSION AND SEDIMENT CONTROL PLANS
47	EROSION AND SEDIMENT CONTROL DETAILS
48	SUGGESTED STAGING AND TRAFFIC CONTROL GENERAL NOTES
49	MAINTENANCE OF TRAFFIC OVERVIEW
50 - 138	SUE UTILITIES
139	ITS LEGEND & ABBREVIATIONS
140 - 141	ITS SHEET LAYOUT MAP
142 - 146	ITS REMOVAL PLANS
147 - 148	ITS DEVICE SCHEDULES
149 - 218	ITS PLANS
219 - 252	ITS DETAILS
253 - 301	DMS SIGN STRUCTURES - FOR INFORMATION ONLY
302 - 304	POWER SINGLE LINE DIAGRAMS
305 - 314	SERVICE METER PEDESTAL DETAILS
315 - 316	LIGHTING CONTROLLER DETAILS
317 - 320	DISCONNECT SWITCH DETAILS
321 - 324	COMMUNICATION NETWORK OVERVIEW
325 - 338	SINGLE LINE DIAGRAMS
339 - 407	TYPICAL SPLICE DETAILS
408 - 455	FIBER ASSIGNMENTS
456	ITS COMMUNICATIONS HUT SITE PLAN
457 - 465	ITS COMMUNICATIONS HUT DETAILS
466 - 467	ITS CROSS SECTIONS

HIGHWAY STANDARDS

STD	DESCRIPTION
000001-09	STANDARD SYMBOLS, ABBREVIATIONS AND PATTERNS
001006	DECIMAL OF AN INCH AND OF A FOOT
280001-07	TEMPORARY EROSION CONTROL SYSTEMS
664001-02	CHAIN LINK FENCE
701001-02	OFF-RD OPERATIONS, 2L, 2W, MORE THAN 15' (4.5 M) AWAY
701006-05	OFF-RD OPERATIONS, 2L, 2W, 15' (4.5 M) TO 24" (600 MM) FROM PAVEMENT EDGE
701101-05	OFF-RD OPERATIONS, MULTILANE, 15' (4.5 M) TO 24" (600 MM) FROM PAVEMENT EDGE
701106-02	OFF-RD OPERATIONS, MULTILANE, MORE THAN 15' (4.5 M) AWAY
701400-12	APPROACH TO LANE CLOSURE, FREEWAY/ EXPRESSWAY
701401-13	LANE CLOSURE, FREEWAY/ EXPRESSWAY
701428-01	TRAFFIC CONTROL SETUP AND REMOVAL FREEWAY/ EXPRESSWAY
701446-11	TWO/LANE CLOSURE, FREEWAY/EXPRESSWAY
701901-11	TRAFFIC CONTROL DEVICES
814001-03	HANDHOLES
838001-01	BREAKAWAY DEVICES
878001-11	CONCRETE FOUNDATION DETAILS

IDOT DISTRICT ONE DETAILS

DETAIL	DESCRIPTION
BE-220	ELECTRIC SERVICE INSTALLATION AERIAL, REMOTE DISCONNECT
TC-08	ENTRANCE AND EXIT RAMP CLOSURE DETAILS
TC-09	TRAFFIC CONTROL DETAILS FOR FREEWAY SINGLE & MULTI-LANE WEAVE
TC-17	TRAFFIC CONTROL DETAILS FOR FREEWAY SHOULDER CLOSURES AND PARTIAL RAMP CLOSURES

GENERAL NOTES

1. THE CONTRACTOR WILL NOT BE ALLOWED TO SET UP A YARD OR FIELD OFFICE ON STATE PROPERTY WITHOUT WRITTEN PERMISSION FROM THE DEPARTMENT.

2. IT SHALL BE THE CONTRACTOR'S RESPONSIBILITY TO VERIFY ALL DIMENSIONS AND CONDITIONS EXISTING IN THE FIELD PRIOR TO CONSTRUCTION AND ORDERING OF MATERIALS.

3. THE CONTRACTOR SHALL CONTACT THE DISTRICT ONE TRAFFIC CONTROL SUPERVISOR, AT (847) 705-4470 (ARTERIAL) (847) 705-4151 (EXPRESSWAYS) A MINIMUM OF 72 HOURS IN ADVANCE OF BEGINNING WORK.

4. CONTACT THE ROADSIDE DEVELOPMENT UNIT AT 847-705-4171 AT LEAST TWO (2) WEEKS IN ADVANCE OF WEED CONTROL AND FORESTRY WORK TO IDENTIFY & MARK TREES TO SAVE WITHIN CLEARING AREAS.

5. ALL ELEVATIONS IN THE PLANS ARE BASED UPON THE NORTH AMERICAN VERTICAL DATUM OF 1988 (NAVD88), UNLESS OTHERWISE NOTED.

6. DO NOT SCALE PLANS FOR CONSTRUCTION DIMENSIONS.

7. SEVENTY-TWO (72) HOURS BEFORE STARTING EXCAVATION, THE CONTRACTOR SHALL CALL JULIE AT 1-800-892-0123 OR 811 TO HAVE THE LOCATION OF EXISTING UNDERGROUND UTILITIES MARKED IN THE FIELD.

8. IDOT FACILITIES ARE NOT LOCATED BY JULIE OR DIGGER. IDOT ELECTRICAL FACILITIES INCLUDING ROADWAY LIGHTING, FIBER OPTIC, ITS EQUIPMENT, TRAFFIC SIGNAL FACILITIES ARE LOCATED BY THE DEPARTMENT'S ELECTRICAL MAINTENANCE CONTRACTOR. AS OF THE LETTING DATE, CONTACT MEADE ELECTRIC COMPANY AT 773-287-7672.

9. EXISTING SURFACE DISTURBED DURING EXCAVATION FOR FOUNDATIONS AND PUSH PITS SHALL BE RESTORED TO THE LIMITS OF CONDITION SPECIFIED BY THE ENGINEER OR AS SHOWN ON THE PLANS. UNLESS NOTED OTHERWISE ON THE PLANS, THE REMOVAL AND RESTORATION SHALL BE INCLUDED IN THE CONTRACT.

10. EXISTING UNDERGROUND AND ABOVE-GROUND FACILITIES, STRUCTURES AND UTILITIES HAVE BEEN PLOTTED ON THESE CONTRACT DOCUMENTS BASED UPON THE INFORMATION AND SURVEYS AVAILABLE AT THE TIME OF DRAWING PREPARATION. THE LOCATION OF THESE FACILITIES MUST, THEREFORE, MUST BE CONSIDERED APPROXIMATE ONLY. IN ADDITION, THERE MAY BE OTHER FACILITIES, STRUCTURES, AND UTILITIES WHICH DID NOT EXIST OR THE EXISTENCE OF WHICH WAS NOT KNOWN AT THE TIME OF DRAWING PREPARATION. IT IS THE SOLE RESPONSIBILITY OF CONTRACTOR(S) TO HAVE ALL THE EXISTING FACILITIES, STRUCTURES, AND UTILITIES LOCATED IN THE FIELD PRIOR TO ANY EXCAVATION OR CONSTRUCTION ACTIVITY; AND TO PROTECT ALL SUCH EXISTING FEATURES DURING CONSTRUCTION. ANY UTILITY THAT IS DAMAGED DURING CONSTRUCTION SHALL BE REPAIRED OR REPLACED TO THE SATISFACTION OF THE ENGINEER. THIS WORK WILL BE AT THE CONTRACTOR'S EXPENSE.

11. AFTER THE INITIAL LOCATE OF IDOT FACILITIES, THE CONTRACTOR WILL BE RESPONSIBLE FOR LOCATING EXISTING IDOT ELECTRICAL FACILITIES AT HIS/HER OWN EXPENSE. THE CONTRACTOR SHALL ALSO BE LIABLE FOR ANY DAMAGE TO IDOT FACILITIES RESULTING FROM INACCURATE LOCATING.

12. THE CONTRACTOR SHALL LOCATE AND WORK AROUND EXISTING UTILITIES AS NECESSARY, INCLUDING POTHOLING, UNCOVERING, AND HAND DIGGING AROUND THE UTILITIES. THE COST OF THIS WORK WILL NOT BE PAID FOR SEPARATELY BUT WILL BE CONSIDERED INCLUDED IN THE BID PRICE OF THE ITEM BEING CONSTRUCTED.

13. THE CONTRACTOR SHALL VERIFY ADEQUATE CLEARANCE OVER/UNDER EXISTING AND PROPOSED FACILITIES BEFORE INSTALLING DUCTS, CONDUIT AND CABLES. WHERE THE CONTRACTOR'S EXCAVATION MEETS AN OBSTRUCTION, THE CONTRACTOR SHALL NOTIFY THE ENGINEER FOR DIRECTION IN WRITING PRIOR TO EXCAVATION.

14. CONDUIT OR DUCT CROSSING OVER/UNDER OTHER UTILITIES SHALL MAINTAIN A SEPA RATION OF AT LEAST 18 INCHES OR AS SPECIFIED BY OWNING UTILITY.

15. CONDUITS AND DUCT SHALL BE POSITIONED IN THE FIELD TO AVOID CONFLICT WITH ROADWAY UNDERDRAINS AND OTHER EXISTING AND PROPOSED UTILITIES.

16. NO ADDITIONAL COMPENSATION SHALL BE ALLOWED FOR PLACING CONDUIT AT GREATER THAN MINIMUM DEPTH TO AVOID OBSTACLES SUCH AS UNDERGROUND UTILITIES AND STRUCTURES SPECIFIED OR TO ENTER COMMUNICATIONS VAULTS OR HANDHOLES.

17. THE CONTRACTOR SHALL AVOID TRENCHING THROUGH WETLAND AREA, ROADSIDE DITCHES AND DETENTION PONDS.

18. IDOT MICRODUCT SHALL ONLY ENTER IDOT COMMUNICATIONS VAULTS OR JUNCTION BOXES.

19. THIRD PARTY MICRODUCT SHALL ONLY ENTER THIRD PARTY COMMUNICATIONS VAULTS OR JUNCTION BOXES.

20. ROCK EXCAVATION IS EXPECTED TO BE REQUIRED FOR ITS INFRASTRUCTURE CONSTRUCTION, INCLUDING, BUT NOT LIMITED TO, CONDUIT, INTERDUCT, HANDHOLE, AND FOUNDATION CONSTRUCTION.

21. NON-REGULATED SURPLUS MATERIALS SHALL BE REMOVED AND DISPOSED OF IN ACCORDANCE WITH ARTICLE 202.03 OF THE STANDARD SPECIFICATIONS. THIS WORK WILL BE PAID FOR AS REMOVAL AND DISPOSAL OF UNSUITABLE MATERIAL.

22. ELECTRICAL WORK SHALL CONFORM WITH NATIONAL, STATE, AND LOCAL CODES.

23. ELECTRICAL HANDHOLE COVER LEGEND SHALL BE "IDOT ITS".

24. ITS SYMBOLS ARE OVERSIZED ON THE PLANS FOR CLARITY. CONTRACTOR SHALL USE STATIONS AND OFFSETS TO ACCURATELY LOCATE EQUIPMENT.

25. TEMPORARY BLANK SIGN PANELS WERE ATTACHED TO THE EXISTING DMS OVERHEAD SIGN STRUCTURES IN PREVIOUS CONTRACTS. THE EXISTING SIGN PANELS SHALL BE REMOVED AND DISPOSED OF WITHOUT DAMAGING THE SIGN STRUCTURE AND A PERMANENT CONNECTION OF THE DMS CABINET TO THE STRUCTURE SHALL BE MADE. REUSE OF ANY EXISTING SIGN PANEL CONNECTION ELEMENTS IS PERMISSIBLE WITH THE APPROVAL OF THE ENGINEER AND PROVIDED THE ELEMENTS ARE NOT DAMAGED IN ANY WAY. THE DMS CABINET CONNECTION TO THE EXISTING SIGN STRUCTURE SHALL MEET ALL REQUIREMENTS AS SHOWN IN THE OVERHEAD SIGN STRUCTURE PLANS. THE COST FOR THIS WORK SHALL BE INCLUDED WITH DYNAMIC MESSAGE SIGN, WALK-IN ACCESS, FULL MATRIX, COLOR, NTCIP 1203.

26. LOCATIONS, DIMENSIONS, AND DETAILS OF THE EXISTING ITS INFRASTRUCTURE SHOWN IN THE PLANS HAVE BEEN TAKEN FROM EXISTING PLANS AND ARE SUBJECT TO NOMINAL CONSTRUCTION VARIATIONS. THE CONTRACTOR SHALL SURVEY THE EXISTING ITS INFRASTRUCTURE (INCLUDING ALL HANDHOLES, VAULTS, JUNCTION BOXES, AND FOUNDATIONS) PRIOR TO WORK. REFER TO SPECIAL PROVISION "SURVEY OF EXISTING ITS INFRASTRUCTURE" FOR FURTHER INFORMATION.

27. THE CONTRACTOR SHALL COMPLETE LOCALIZED GRADING, AS REQUIRED, TO TIE PROPOSED FACILITIES, INCLUDING SERVICE PADS, FOUNDATIONS, HANDHOLES, AND ALL OTHER PROPOSED UNDERGROUND FACILITIES INSTALLED UNDER THIS CONTRACT, INTO THE EXISTING GRADING. THIS WORK WILL NOT BE PAID FOR SEPARATELY BUT WILL BE CONSIDERED IN THE CONTRACT UNIT BID PRICE FOR THE RESPECTIVE PAY ITEM BEING CONSTRUCTED.

28. SEEDING SHALL BE DONE ON ALL AREAS THAT ARE DISTURBED BY CONSTRUCTION OPERATIONS AS DIRECTED BY THE ENGINEER, SEEDING SHALL BE PAID FOR ONLY WITHIN THE PROPOSED CONSTRUCTION LIMITS, RIGHT-OF-WAY, OR EASEMENT LIMITS. ALL AREAS DISTURBED BY THE CONTRACTOR OUTSIDE THE PROPOSED CONSTRUCTION LIMITS SHALL BE SEEDED AS DIRECTED BY THE ENGINEER AT THE CONTRACTOR'S EXPENSE.

COMMITMENTS:

1. TO AVOID AND MINIMIZE IMPACTS TO THE INDIANA BAT NORTHERN LONG-EARED BAT, NO TREE CLEARING SHALL OCCUR FROM APRIL 1 TO OCTOBER 31.

2. A PROJECT SPECIFIC DUST CONTROL PLAN WILL BE DEVELOPED PRIOR TO CONSTRUCTION AND AS PART OF THE REQUIRED PRE-CONSTRUCTION CONTRACTOR DOCUMENTS.

CODE NO.	ITEM DESCRIPTION	UNIT	URBAN TOTAL QUANTITY	ITS I-80 0021 90% FED 10% STATE	ITS I-80 3RD PARTY 0021 100% STATE
20200100	EARTH EXCAVATION	CU YD	59	59	
20200200	ROCK EXCAVATION	CU YD	695	695	
20201200	REMOVAL AND DISPOSAL OF UNSUITABLE MATERIAL	CU YD	754	754	
21101615	TOPSOIL FURNISH AND PLACE, 4"	SQ YD	7,039	7,039	
* 25000210	SEEDING, CLASS 2A	ACRE	1.75	1.75	
* 25000310	SEEDING, CLASS 4	ACRE	0.25	0.25	
* 25000400	NITROGEN FERTILIZER NUTRIENT	POUND	169	169	
* 25000600	POTASSIUM FERTILIZER NUTRIENT	POUND	169	169	
25100115	MULCH, METHOD 2	ACRE	2.00	2.00	
25100630	EROSION CONTROL BLANKET	SQ YD	5,801	5,801	
X2511630	EROSION CONTROL BLANKET (SPECIAL)	SQ YD	1,611	1,611	
28000305	TEMPORARY DITCH CHECKS	FOOT	150	150	
28000400	PERIMETER EROSION BARRIER	FOOT	789	789	
28000510	INLET FILTERS	EACH	30	30	
31100300	SUBBASE GRANULAR MATERIAL, TYPE A 4"	SQ YD	71	71	
31101100	SUBBASE GRANULAR MATERIAL, TYPE B	CU YD	695	695	

* SPECIALTY ITEM

MODEL: 2D SHEET H
FILE NAME: C:\TRANSYSTEMS\PW_LOCAL\TRANSYSTEMS-PW-01\DMS31452\62R15-SHT-SOQ-01.DGN

exp.

USER NAME = SALASL	DESIGNED - CMA	REVISED -	
	DRAWN - CMA	REVISED -	
PLOT SCALE = 0.16666667 ' / IN.	CHECKED - TMH	REVISED -	
PLOT DATE = 11/12/2025	DATE - 11/12/2025	REVISED -	

STATE OF ILLINOIS
DEPARTMENT OF TRANSPORTATION

I-80
SUMMARY OF QUANTITIES

SCALE: NTS | SHEET OF SHEETS | STA. TO STA.

F.A.I. RTE.	SECTION	COUNTY	TOTAL SHEETS	SHEET NO.
80	FAI 80 21 VLS	VARIOUS	467	5

CONTRACT NO. 62R19

ILLINOIS | FED. AID PROJECT

REV-SEP

	CODE NO.	ITEM DESCRIPTION	UNIT	URBAN TOTAL QUANTITY	ITS I-80 0021 90% FED 10% STATE	ITS I-80 3RD PARTY 0021 100% STATE
	31101400	SUBBASE GRANULAR MATERIAL, TYPE B 6"	SQ YD	83	83	
	40200900	AGGREGATE SURFACE COURSE, TYPE B	CU YD	5	5	
	42000060	WELDED WIRE REINFORCEMENT	SQ YD	71	71	
	42000100	PORTLAND CEMENT CONCRETE PAVEMENT 6"	SQ YD	71	71	
	50200400	ROCK EXCAVATION FOR STRUCTURES	CU YD	25	25	
	66400505	CHAIN LINK FENCE, 8'	FOOT	106	106	
	66409400	CHAIN LINK GATES, 8' X 12' DOUBLE	EACH	1	1	
*	66900200	NON-SPECIAL WASTE DISPOSAL	CU YD	670	670	
*	66900530	SOIL DISPOSAL ANALYSIS	EACH	2	2	
*	66901001	REGULATED SUBSTANCES PRE-CONSTRUCTION PLAN	L SUM	1	1	
*	66901003	REGULATED SUBSTANCES FINAL CONSTRUCTION REPORT	L SUM	1	1	
*	66901005	ENGINEERED BARRIER	SQ YD	510	510	
*	66901006	REGULATED SUBSTANCES MONITORING	CAL DA	40	40	
	67100100	MOBILIZATION	L SUM	1	1	
*	72400500	RELOCATE SIGN PANEL ASSEMBLY - TYPE A	EACH	2	2	
*	72800100	TELESCOPING STEEL SIGN SUPPORT	FOOT	33	33	

* SPECIALTY ITEM

MODEL: 2D SHEET H
FILE NAME: C:\TRANSYSTEMS\PW_LOCAL\TRANSYSTEMS-PW-01\DMS31452\62R19-SHT-SOQ-02.DGN

exp.

USER NAME = SALASL	DESIGNED - CMA	REVISED -	
	DRAWN - CMA	REVISED -	
PLOT SCALE = 0.16666667 ' / IN.	CHECKED - TMH	REVISED -	
PLOT DATE = 11/12/2025	DATE - 11/12/2025	REVISED -	

STATE OF ILLINOIS
DEPARTMENT OF TRANSPORTATION

I-80
SUMMARY OF QUANTITIES

SCALE: NTS | SHEET OF SHEETS | STA. TO STA.

F.A.I. RTE.	SECTION	COUNTY	TOTAL SHEETS	SHEET NO.
80	FAI 80 21 VLS	VARIOUS	467	6

CONTRACT NO. 62R19

ILLINOIS | FED. AID PROJECT

CODE NO.	ITEM DESCRIPTION	UNIT	URBAN TOTAL QUANTITY	ITS I-80 0021 90% FED 10% STATE	ITS I-80 3RD PARTY 0021 100% STATE
80400100	ELECTRIC SERVICE INSTALLATION	EACH	3	3	
80400200	ELECTRIC UTILITY SERVICE CONNECTION	L SUM	1	1	
81028200	UNDERGROUND CONDUIT, GALVANIZED STEEL, 2" DIA.	FOOT	310	310	
81028240	UNDERGROUND CONDUIT, GALVANIZED STEEL, 4" DIA.	FOOT	1,238	994	244
81028750	UNDERGROUND CONDUIT, COILABLE NONMETALLIC CONDUIT, 2" DIA.	FOOT	2,300	2,300	
81101001	CONDUIT ATTACHED TO STRUCTURE, RIGID NON-METALLIC, 2" DIA.	FOOT	229	229	
81101002	CONDUIT ATTACHED TO STRUCTURE, RIGID NON-METALLIC, 4" DIA.	FOOT	1,632	1,090	542
81300915	JUNCTION BOX, STAINLESS STEEL, ATTACHED TO STRUCTURE, 20" X 20" X 8"	EACH	2	2	
81400200	HEAVY-DUTY HANDHOLE	EACH	6	6	
81702120	ELECTRIC CABLE IN CONDUIT, 600V (XLP-TYPE USE) 1/C NO. 8	FOOT	134,684	134,684	
81702130	ELECTRIC CABLE IN CONDUIT, 600V (XLP-TYPE USE) 1/C NO. 6	FOOT	28,495	28,495	
81702140	ELECTRIC CABLE IN CONDUIT, 600V (XLP-TYPE USE) 1/C NO. 4	FOOT	143	143	
81702150	ELECTRIC CABLE IN CONDUIT, 600V (XLP-TYPE USE) 1/C NO. 2	FOOT	9,205	9,205	
81702180	ELECTRIC CABLE IN CONDUIT, 600V (XLP-TYPE USE) 1/C NO. 3/0	FOOT	429	429	
81702190	ELECTRIC CABLE IN CONDUIT, 600V (XLP-TYPE USE) 1/C NO. 4/0	FOOT	9,420	9,420	
83600352	LIGHT POLE FOUNDATION, METAL, 11 1/2" BOLT CIRCLE, 8 5/8" X 6'	EACH	2	2	

* SPECIALTY ITEM

CODE NO.	ITEM DESCRIPTION	UNIT	URBAN TOTAL QUANTITY	ITS I-80 0021 90% FED 10% STATE	ITS I-80 3RD PARTY 0021 100% STATE
83800105	BREAKAWAY DEVICE, TRANSFORMER BASE, 11.5 INCH BOLT CIRCLE	EACH	2	2	
84200804	REMOVAL OF POLE FOUNDATION	EACH	1	1	
87300901	ELECTRIC CABLE IN CONDUIT, TRACER, NO. 12 1C	FOOT	1,662	1,662	
87800100	CONCRETE FOUNDATION, TYPE A	FOOT	6	6	
87800400	CONCRETE FOUNDATION, TYPE E 30-INCH DIAMETER	FOOT	14	14	
89502350	REMOVE AND REINSTALL ELECTRIC CABLE FROM CONDUIT	FOOT	7,454	7,454	
X0320023	CLOSED CIRCUIT TELEVISION DOME CAMERA, HD	EACH	40	40	
X0323904	ILLINOIS DEPARTMENT OF TRANSPORTATION COMMUNICATIONS NODE	L SUM	1	1	
X0323917	CABINET, MODEL 334	EACH	5	5	
X0324597	CLOSED CIRCUIT TELEVISION CABINET	EACH	1	1	
X0326944	ATMS INTEGRATION	L SUM	1	1	
X0326948	CLOSED CIRCUIT TELEVISION CAMERA STRUCTURE, 50 FT. MOUNTING HEIGHT	EACH	17	17	
X0326949	CLOSED CIRCUIT TELEVISION CAMERA STRUCTURE FOUNDATION, 30" DIAMETER	FOOT	27	27	
X0326952	STEP-DOWN TRANSFORMER	EACH	29	29	
X0327120	WEED CONTROL, NATIVE LANDSCAPE ENHANCEMENT	ACRE	1.75	1.75	
X0327561	BUDGETARY ALLOWANCE FOR CCTV INTEGRATION	L SUM	1	1	

* SPECIALTY ITEM

MODEL: 2D SHEET H
FILE NAME: C:\TRANSYSTEMS\PW_LOCAL\TRANSYSTEMS-PW-01\DMS31452\62R19-SHT-SOQ-04.DGN

exp.

USER NAME = SALASL	DESIGNED - CMA	REVISED -	
	DRAWN - CMA	REVISED -	
PLOT SCALE = 0.16666667 ' / IN.	CHECKED - TMH	REVISED -	
PLOT DATE = 11/12/2025	DATE - 11/12/2025	REVISED -	

STATE OF ILLINOIS
DEPARTMENT OF TRANSPORTATION

I-80
SUMMARY OF QUANTITIES

SCALE: SHEET OF SHEETS STA. TO STA.

F.A.I. RTE.	SECTION	COUNTY	TOTAL SHEETS	SHEET NO.
80	FAI 80 21 VLS	VARIOUS	467	8

CONTRACT NO. 62R19

ILLINOIS FED. AID PROJECT

CODE NO.	ITEM DESCRIPTION	UNIT	URBAN TOTAL QUANTITY	ITS I-80 0021 90% FED 10% STATE	ITS I-80 3RD PARTY 0021 100% STATE
X0328032	BUDGETARY ALLOWANCE FOR NETWORK DESIGN AND INTEGRATION	L SUM	1	1	
X1400102	OUTDOOR RATED NETWORK CABLE	FOOT	4,055	4,055	
X1400106	WIRELESS VEHICLE DETECTION SYSTEM	EACH	33	33	
X1400211	LIGHT POLE, SPECIAL, 30'	EACH	2	2	
X1400216	LAYER II (DATALINK) SWITCH	EACH	57	57	
X1400217	TERMINATE FIBER IN CABINET	EACH	4,200	4,200	
X1400337	WIRELESS IN PAVEMENT DETECTOR	EACH	405	405	
X1400360	DIRECTIONAL BORING THROUGH ROCK	FOOT	524	390	134
X1400416	CABINET, MODEL 336S	EACH	37	37	
X1400426	MODIFY EXISTING FIBER OPTIC CABINET	EACH	1	1	
X1400438	WIRELESS VEHICLE DETECTION SOLAR REPEATER	EACH	11	11	
X1400449	MODIFY EXISTING CABINET EQUIPMENT AND APPURTENANCES	EACH	12	12	
X1400457	DMS SIGN CONTROL EQUIPMENT	EACH	5	5	
X1400460	LAYER III (NETWORK) SWITCH	EACH	4	4	
X2010350	TREE REMOVAL, ACRES (SPECIAL)	ACRE	1.75	1.75	
X2600028	DYNAMIC MESSAGE SIGN, WALK-IN ACCESS, FULL MATRIX, COLOR, NTCIP 1203	EACH	5	5	

* SPECIALTY ITEM

CODE NO.	ITEM DESCRIPTION	UNIT	URBAN TOTAL QUANTITY	ITS I-80 0021 90% FED 10% STATE	ITS I-80 3RD PARTY 0021 100% STATE
X6640638	TEMPORARY CONSTRUCTION FENCE	FOOT	596	596	
X6700410	ENGINEER'S FIELD OFFICE, TYPE A (SPECIAL)	CAL MO	30	30	
X7010216	TRAFFIC CONTROL AND PROTECTION, (SPECIAL)	L SUM	1	1	
X7011015	TRAFFIC CONTROL AND PROTECTION (EXPRESSWAYS)	L SUM	1	1	
X8101102	UNDERGROUND CONDUIT, MULTI-DUCT, 7-18MM MICRODUCTS	FOOT	15,411	10,260	5,151
X8300205	LIGHT POLE, STEEL 50 FT. WITH CAMERA LOWERING SYSTEM	EACH	20	20	
X8570100	DISCONNECT SWITCH	EACH	28	28	
X8710036	FIBER OPTIC CABLE 12 FIBERS, SINGLE MODE	FOOT	14,235	14,235	
X8710054	FIBER OPTIC TERMINATION PANEL, 12 F OR 24F	EACH	61	61	
X8710066	FIBER OPTIC CABLE, MICRO, 144 FIBERS, SINGLE MODE	FOOT	383,068	305,030	78,038
X8710082	FIBER OPTIC PATCH PANEL, 144 PORT, RACK MOUNT	EACH	24	24	
X8710304	FIBER OPTIC CABLE SPLICE - LATERAL	EACH	65	65	
X8710306	FIBER OPTIC CABLE SPLICE - MAINLINE	EACH	15	14	1
X8710318	FIBER OPTIC UTILITY MARKER	EACH	16	16	
X8710402	FIBER OPTIC INNERDUCT 1 1/4" DIA.	FOOT	1,581	1,581	
X8780107	CONCRETE FOUNDATION (SPECIAL)	FOOT	14	14	

* SPECIALTY ITEM

MODEL: 2D SHEET H
FILE NAME: C:\TRANSYSTEMS\PW_LOCAL\TRANSYSTEMS-PW-01\DMS31452\62R19-SHT-SOQ-06.DGN

exp.

USER NAME = SALASL	DESIGNED - CMA	REVISED -	
	DRAWN - CMA	REVISED -	
PLOT SCALE = 0.16666667 ' / IN.	CHECKED - TMH	REVISED -	
PLOT DATE = 11/12/2025	DATE - 11/12/2025	REVISED -	

STATE OF ILLINOIS
DEPARTMENT OF TRANSPORTATION

I-80
SUMMARY OF QUANTITIES

SCALE: NTS | SHEET OF SHEETS | STA. TO STA.

F.A.I. RTE.	SECTION	COUNTY	TOTAL SHEETS	SHEET NO.
80	FAI 80 21 VLS	VARIOUS	467	10

CONTRACT NO. 62R19

ILLINOIS | FED. AID PROJECT

	CODE NO.	ITEM DESCRIPTION	UNIT	URBAN TOTAL QUANTITY	ITS I-80 0021 90% FED 10% STATE	ITS I-80 3RD PARTY 0021 100% STATE
*	X8950130	MODIFY EXISTING LIGHTING CONTROLLER	EACH	3	3	
*	X8950425	REMOVE EXISTING TRAFFIC SURVEILLANCE EQUIPMENT	L SUM	1	1	
*	X8950510	REMOVE FIBER OPTIC CABLE FROM CONDUIT	FOOT	39,052	39,052	
	Z0013798	CONSTRUCTION LAYOUT	L SUM	1	1	
*	Z0033052	COMMUNICATIONS VAULT	EACH	21	14	7
*	X1400521	WIRELESS VEHICLE DETECTION RADIO	EACH	4	4	
*	X8710068	FIBER OPTIC CABLE 288 FIBERS, MICRO, SINGLE MODE	FOOT	39,232	39,232	
Ø	Z0076600	TRAINEES	HOUR	2500	2500	
Ø	Z0076604	TRAINEES - TRAINING PROGRAM GRADUATE	HOUR	2500	2500	

* SPECIALTY ITEM

Ø 0042

MODEL: 2D SHEET H
FILE NAME: C:\TRANSYSTEMS\IDW_LOCAL\TRANSYSTEMS-PW-01\DMS31452\62R19-SHT-SQQ-07.DGN

exp.

USER NAME = SALASL	DESIGNED - CMA	REVISED -	
	DRAWN - CMA	REVISED -	
PLOT SCALE = 0.16666667 ' / IN.	CHECKED - TMH	REVISED -	
PLOT DATE = 11/12/2025	DATE - 11/12/2025	REVISED -	

STATE OF ILLINOIS
DEPARTMENT OF TRANSPORTATION

I-80
SUMMARY OF QUANTITIES

SCALE: NTS | SHEET OF SHEETS | STA. TO STA.

F.A.I. RTE.	SECTION	COUNTY	TOTAL SHEETS	SHEET NO.
80	FAI 80 21 VLS	VARIOUS	467	11

CONTRACT NO. 62R19

ILLINOIS | FED. AID PROJECT

REV-SEP

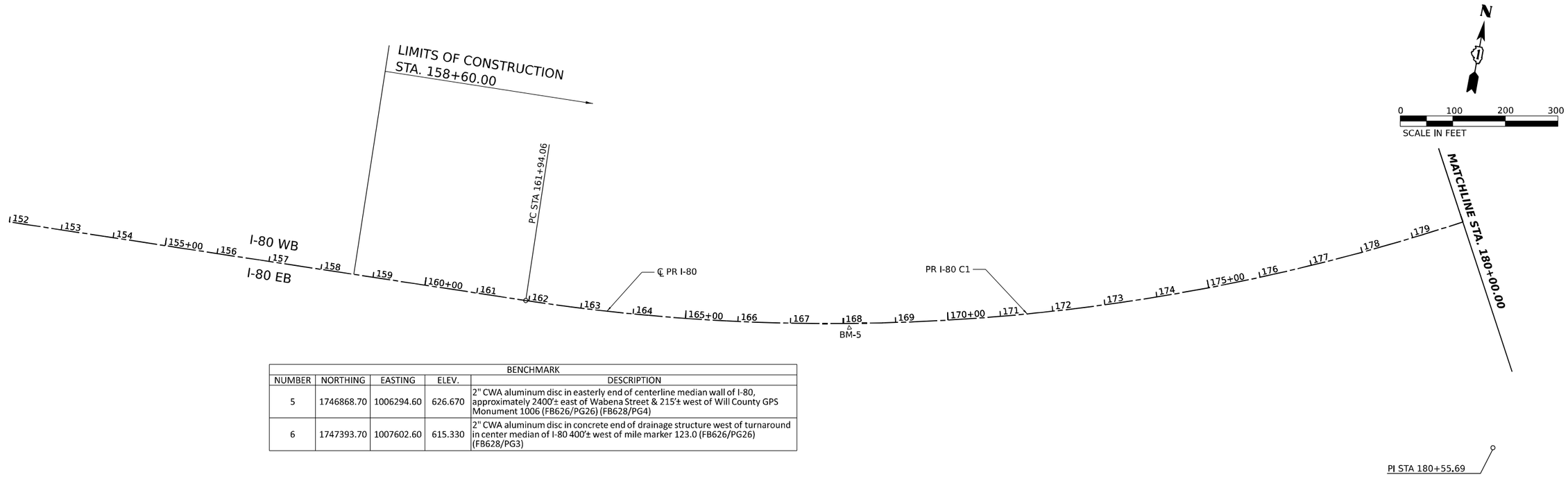

BENCHMARK				
NUMBER	NORTHING	EASTING	ELEV.	DESCRIPTION
5	1746868.70	1006294.60	626.670	2" CWA aluminum disc in easterly end of centerline median wall of I-80, approximately 2400'± east of Wabena Street & 215'± west of Will County GPS Monument 1006 (FB626/PG26) (FB628/PG4)
6	1747393.70	1007602.60	615.330	2" CWA aluminum disc in concrete end of drainage structure west of turnaround in center median of I-80 400'± west of mile marker 123.0 (FB626/PG26) (FB628/PG3)

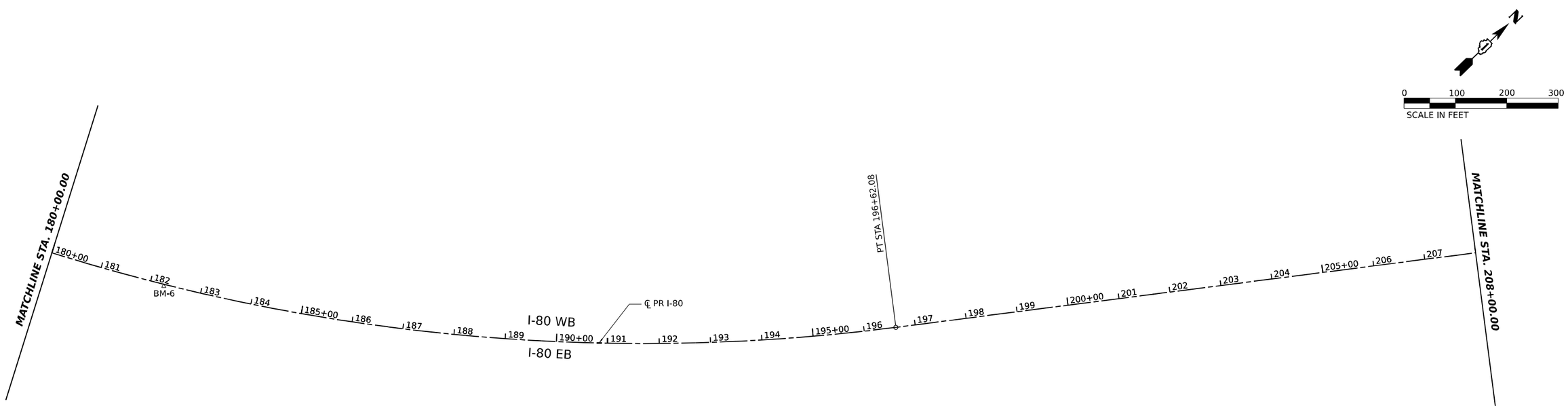

NOTE:
1. SEE SHEETS 34 THRU 39 FOR ALIGNMENT CURVE AND TANGENT DATA.

MODEL: SHEET 1 - PR I80_ALIGN
FILE NAME: C:\TRANSYSTEMS\PRV LOCAL\TRANSYSTEMS-PRV-01\DMS31452\62R19-SHT-ATB-01.DGN

exp.

USER NAME = SALASL	DESIGNED - CS	REVISED -	
	DRAWN - CS	REVISED -	
PLOT SCALE = 0.16666667 ' / IN.	CHECKED - TMH	REVISED -	
PLOT DATE = 11/12/2025	DATE - 11/12/2025	REVISED -	

STATE OF ILLINOIS
DEPARTMENT OF TRANSPORTATION

I–80
ALIGNMENT, TIES, AND BENCHMARKS

SCALE: 1"=100' | SHEET OF SHEETS | STA. TO STA.

F.A.I. RTE.	SECTION	COUNTY	TOTAL SHEETS	SHEET NO.
80	FAI 80 21 VLS	VARIOUS	467	12
		CONTRACT NO. 62R19		
	ILLINOIS	FED. AID PROJECT		

BENCHMARK				
NUMBER	NORTHING	EASTING	ELEV.	DESCRIPTION
7	1749593.50	1009622.20	599.980	2" CWA aluminum disc in concrete pier seat in southerly pier of Shepley Road bridge on south side of eastbound I-80 (FB626/PG26) (FB628/PG5)

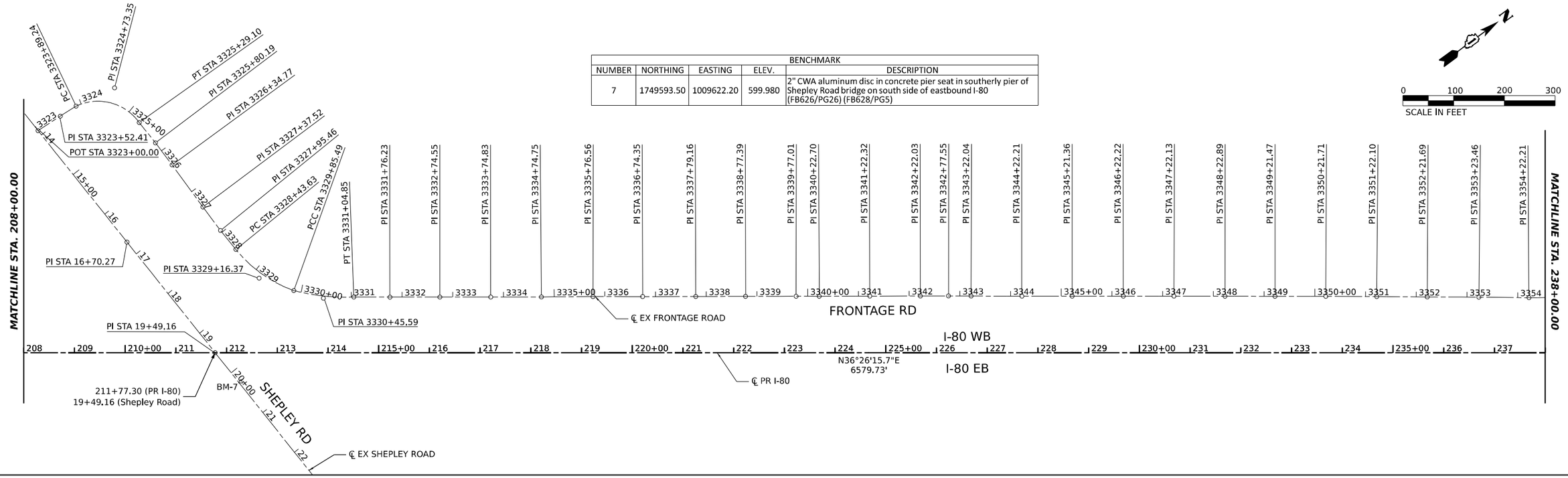

NGS PRIMARY HORIZONTAL CONTROL MONUMENTS				
NGS ID	NORTHING	EASTING	ELEV.	DESCRIPTION
PID-DH6200	1743515.79	989052.49	N/A	GRUNDY COUNTY GIS 0304
PID-AE2473	1730878.16	1006979.29	N/A	WILL COUNTY GPS 1019
PID-AE2471	1746831.74	1006506.51	619.15	WILL COUNTY GPS 1006
PID-MF1784	1767814.89	1026441.69	579.87	JOLIPORT
PID-AE2571	1764272.00	1038372.67	628.67	WILL COUNTY GPS 718
PID-AE2570	1764389.16	1053254.64	542.91	WILL COUNTY GPS 716
PID-AE2569	1764641.79	1069052.49	660.46	WILL COUNTY GPS 713

NGS PRIMARY VERTICAL CONTROL MONUMENTS				
NGS ID	NORTHING	EASTING	ELEV.	DESCRIPTION
PID-DP5481	1765290.05	1003576.05	635.16	WRI 026 (2ND ORDER)
PID-DP5482	1765111.31	998366.36	N/A	WRI 027 (2ND ORDER)
PID-MF0081	N/A	N/A	619.15	G 142 (1ST ORDER)
PID-MF0071	1766431.05	1051094.98	579.87	J142 (1ST ORDER)
PID-MF0070	1764344.99	1049387.48	628.67	K142 (1ST ORDER)
PID-ME1923	N/A	N/A	703.30	W 26 (2ND ORDER)

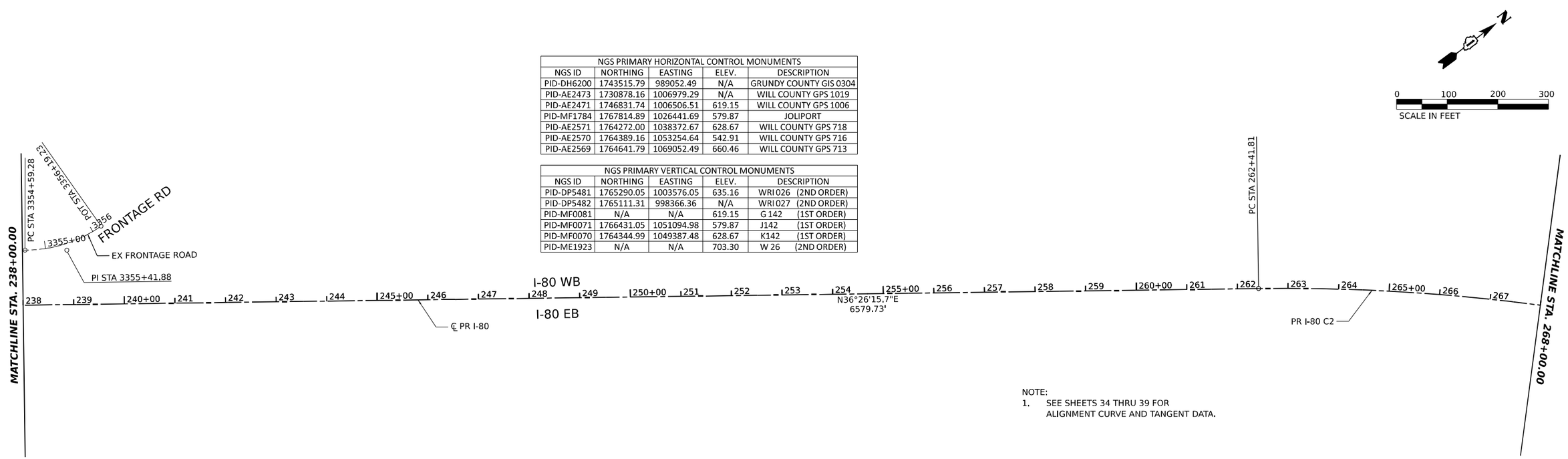

NOTE:
1. SEE SHEETS 34 THRU 39 FOR ALIGNMENT CURVE AND TANGENT DATA.

MODEL: SHEET 3 - PR I80_ALIGN
FILE NAME: C:\TRANSYSTEMS\PW_LOCAL\TRANSYSTEMS-PW-01\DMS31452\62R19-SHT-ATB-02.DGN

exp.

USER NAME = SALASL	DESIGNED - CS	REVISED -	
	DRAWN - CS	REVISED -	
PLOT SCALE = 0.16666667 ' / IN.	CHECKED - TMH	REVISED -	
PLOT DATE = 11/12/2025	DATE - 11/12/2025	REVISED -	

STATE OF ILLINOIS
DEPARTMENT OF TRANSPORTATION

I-80
ALIGNMENT, TIES, AND BENCHMARKS

SCALE: 1"=100' | SHEET OF SHEETS | STA. TO STA.

F.A.I. RTE.	SECTION	COUNTY	TOTAL SHEETS	SHEET NO.
80	FAI 80 21 VLS	VARIOUS	467	13
		CONTRACT NO. 62R19		
	ILLINOIS	FED. AID PROJECT		

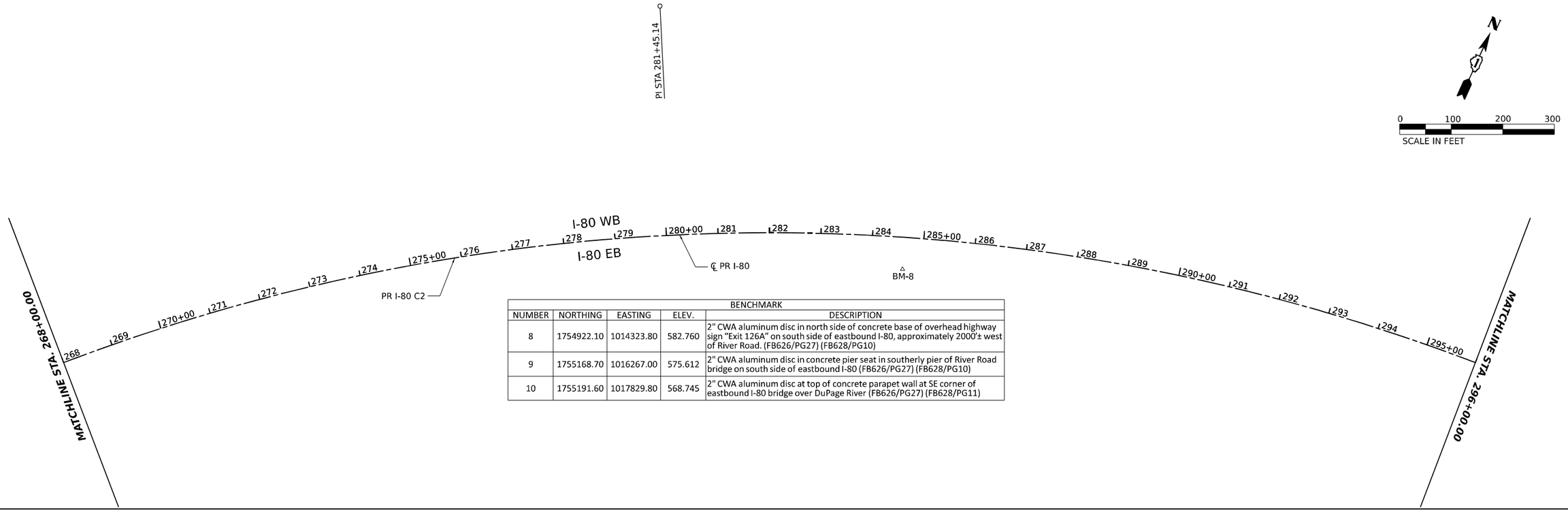

BENCHMARK				
NUMBER	NORTHING	EASTING	ELEV.	DESCRIPTION
8	1754922.10	1014323.80	582.760	2" CWA aluminum disc in north side of concrete base of overhead highway sign "Exit 126A" on south side of eastbound I-80, approximately 2000'± west of River Road. (FB626/PG27) (FB628/PG10)
9	1755168.70	1016267.00	575.612	2" CWA aluminum disc in concrete pier seat in southerly pier of River Road bridge on south side of eastbound I-80 (FB626/PG27) (FB628/PG10)
10	1755191.60	1017829.80	568.745	2" CWA aluminum disc at top of concrete parapet wall at SE corner of eastbound I-80 bridge over DuPage River (FB626/PG27) (FB628/PG11)

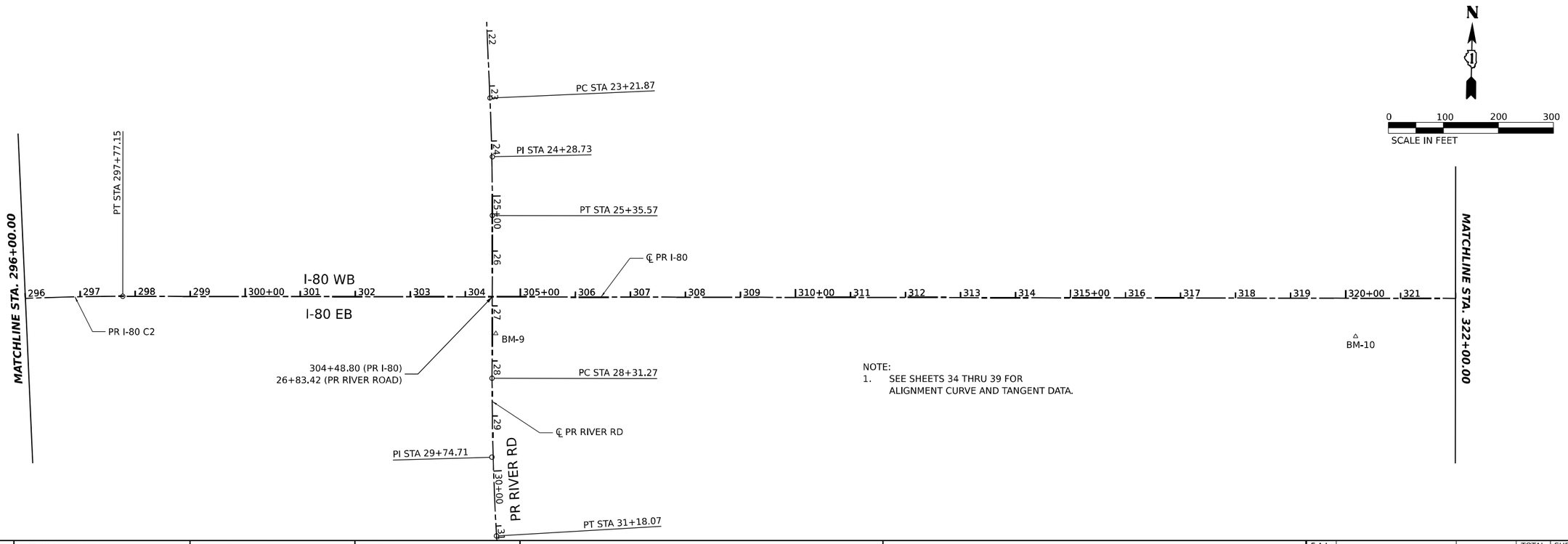

NOTE:
1. SEE SHEETS 34 THRU 39 FOR ALIGNMENT CURVE AND TANGENT DATA.

MODEL: SHEET 3 - PR I80_ALIGN
FILE NAME: C:\TRANSYSTEMS\PRV LOCAL\TRANSYSTEMS-PRV-01\DMS31452\62R19-SHT-ATB-03.DGN

exp.

USER NAME = SALASL	DESIGNED - CS	REVISED -	
	DRAWN - CS	REVISED -	
PLOT SCALE = 0.16666667 ' / IN.	CHECKED - TMH	REVISED -	
PLOT DATE = 11/12/2025	DATE - 11/12/2025	REVISED -	

STATE OF ILLINOIS
DEPARTMENT OF TRANSPORTATION

I–80
ALIGNMENT, TIES, AND BENCHMARKS

SCALE: 1"=100' | SHEET OF SHEETS | STA. TO STA.

F.A.I. RTE.	SECTION	COUNTY	TOTAL SHEETS	SHEET NO.
80	FAI 80 21 VLS	VARIOUS	467	14
		CONTRACT NO. 62R19		
		ILLINOIS	FED. AID PROJECT	

BENCHMARK				
NUMBER	NORTHING	EASTING	ELEV.	DESCRIPTION
11	1755399.50	1019771.00	606.970	2" CWA aluminum disc in northerly bridge parapet wall in west bound I-80 bridge over southwest frontage road, approximately 500'± west of mile marker 126 on north side of westbound I-80 (FB626/PG23) (FB628/PG14)
12	1755476.10	1020533.30	609.800	2" CWA aluminum disc in concrete base of light pole on north side of westbound I-80, approximately 250'± east of mile marker 126 & 950'± west of I-55 centerline. (FB626/PG26) (FB628/PG13)

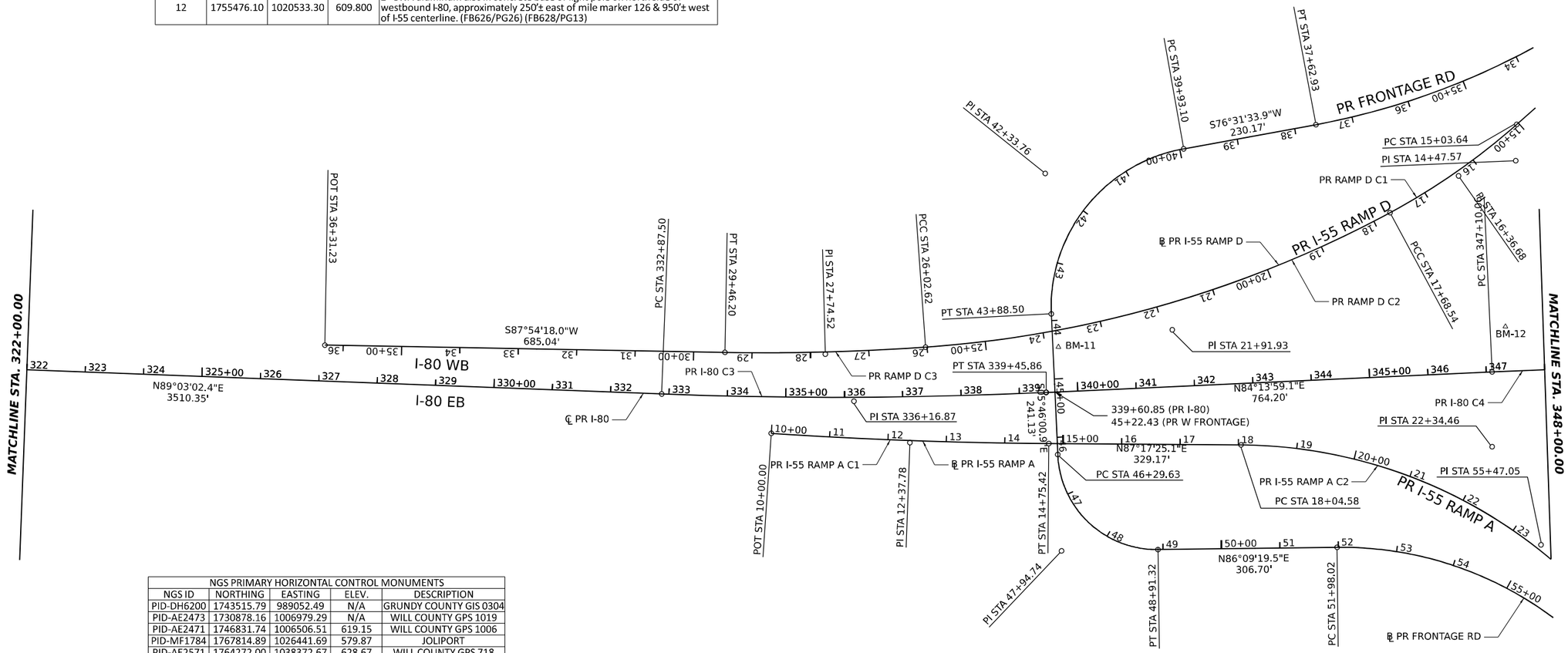

NGS PRIMARY HORIZONTAL CONTROL MONUMENTS				
NGS ID	NORTHING	EASTING	ELEV.	DESCRIPTION
PID-DH6200	1743515.79	989052.49	N/A	GRUNDY COUNTY GIS 0304
PID-AE2473	1730878.16	1006979.29	N/A	WILL COUNTY GPS 1019
PID-AE2471	1746831.74	1006506.51	619.15	WILL COUNTY GPS 1006
PID-MF1784	1767814.89	1026441.69	579.87	JOLIPORT
PID-AE2571	1764272.00	1038372.67	628.67	WILL COUNTY GPS 718
PID-AE2570	1764389.16	1053254.64	542.91	WILL COUNTY GPS 716
PID-AE2569	1764641.79	1069052.49	660.46	WILL COUNTY GPS 713

NGS PRIMARY VERTICAL CONTROL MONUMENTS				
NGS ID	NORTHING	EASTING	ELEV.	DESCRIPTION
PID-DP5481	1765290.05	1003576.05	635.16	WRI 026 (2ND ORDER)
PID-DP5482	1765111.31	998366.36	N/A	WRI 027 (2ND ORDER)
PID-MF0081	N/A	N/A	619.15	G 142 (1ST ORDER)
PID-MF0071	1766431.05	1051094.98	579.87	J142 (1ST ORDER)
PID-MF0070	1764344.99	1049387.48	628.67	K142 (1ST ORDER)
PID-ME1923	N/A	N/A	703.30	W 26 (2ND ORDER)

NOTE:
1. SEE SHEETS 34 THRU 39 FOR ALIGNMENT CURVE AND TANGENT DATA.

MODEL: SHEET 4 - PR I80_ALIGN
FILE NAME: C:\TRANSYSTEMS\PW_LOCAL\TRANSYSTEMS-PW\-010\MS31452\62R19-SHT-ATR-04.DGN

USER NAME = SALASL	DESIGNED - CS	REVISED -	
	DRAWN - CS	REVISED -	
PLOT SCALE = 0.16666667 ' / IN.	CHECKED - TMH	REVISED -	
PLOT DATE = 11/12/2025	DATE - 11/12/2025	REVISED -	

STATE OF ILLINOIS
DEPARTMENT OF TRANSPORTATION

I-80
ALIGNMENT, TIES, AND BENCHMARKS

SCALE: 1"=100' | SHEET OF SHEETS | STA. TO STA.

F.A.I. RTE.	SECTION	COUNTY	TOTAL SHEETS	SHEET NO.
80	FAI 80 21 VLS	VARIOUS	467	15
		CONTRACT NO. 62R19		
	ILLINOIS	FED. AID PROJECT		

MODEL: SHEET 5 - PR I80_ALIGN
FILE NAME: C:\TRANSYSTEMS\PW_LOCAL\TRANSYSTEMS-PW\-01\DMS31453\62R19-SHT-ATB-05.DGN

exp.

USER NAME = SALASL	DESIGNED - CS	REVISED -	
	DRAWN - CS	REVISED -	
PLOT SCALE = 0.16666667 ' / IN.	CHECKED - TMH	REVISED -	
PLOT DATE = 11/12/2025	DATE - 11/12/2025	REVISED -	

STATE OF ILLINOIS
DEPARTMENT OF TRANSPORTATION

I-80
ALIGNMENT, TIES, AND BENCHMARKS

SCALE: 1"=100' | SHEET OF SHEETS | STA. TO STA.

F.A.I. RTE.	SECTION	COUNTY	TOTAL SHEETS	SHEET NO.
80	FAI 80 21 VLS	VARIOUS	467	16
		CONTRACT NO. 62R19		
	ILLINOIS	FED. AID PROJECT		

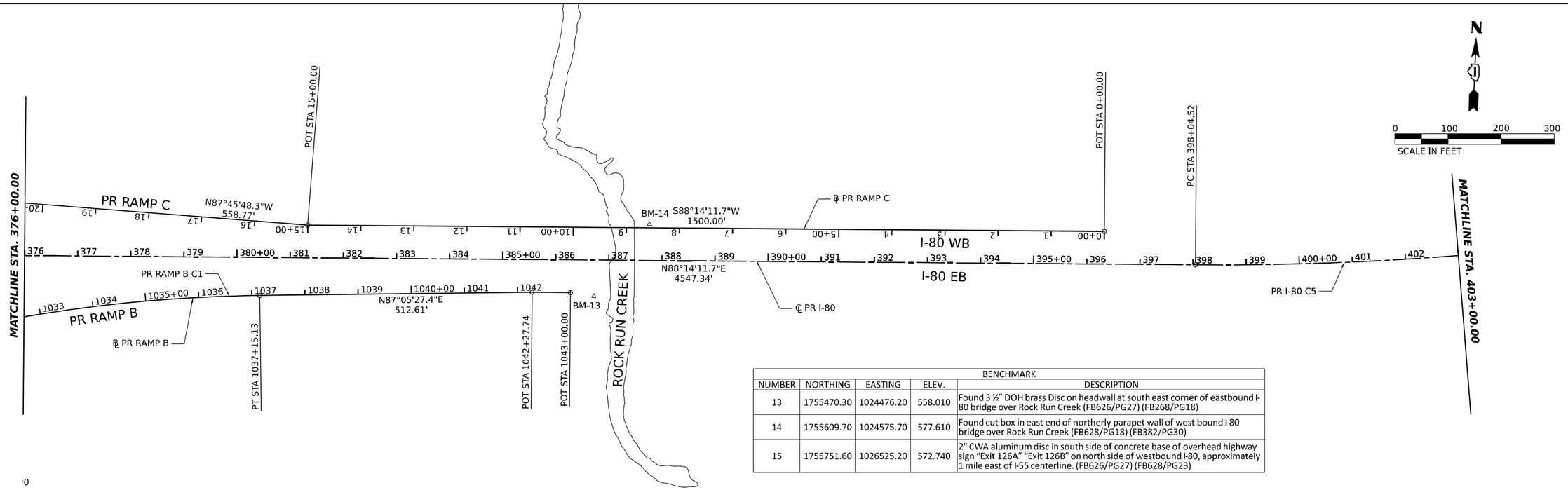

BENCHMARK				
NUMBER	NORTHING	EASTING	ELEV.	DESCRIPTION
13	1755470.30	1024476.20	558.010	Found 3 ½" DOH brass Disc on headwall at south east corner of eastbound I-80 bridge over Rock Run Creek (FB626/PG27) (FB268/PG18)
14	1755609.70	1024575.70	577.610	Found cut box in east end of northerly parapet wall of west bound I-80 bridge over Rock Run Creek (FB628/PG18) (FB382/PG30)
15	1755751.60	1026525.20	572.740	2" CWA aluminum disc in south side of concrete base of overhead highway sign "Exit 126A" "Exit 126B" on north side of westbound I-80, approximately 1 mile east of I-55 centerline. (FB626/PG27) (FB628/PG23)

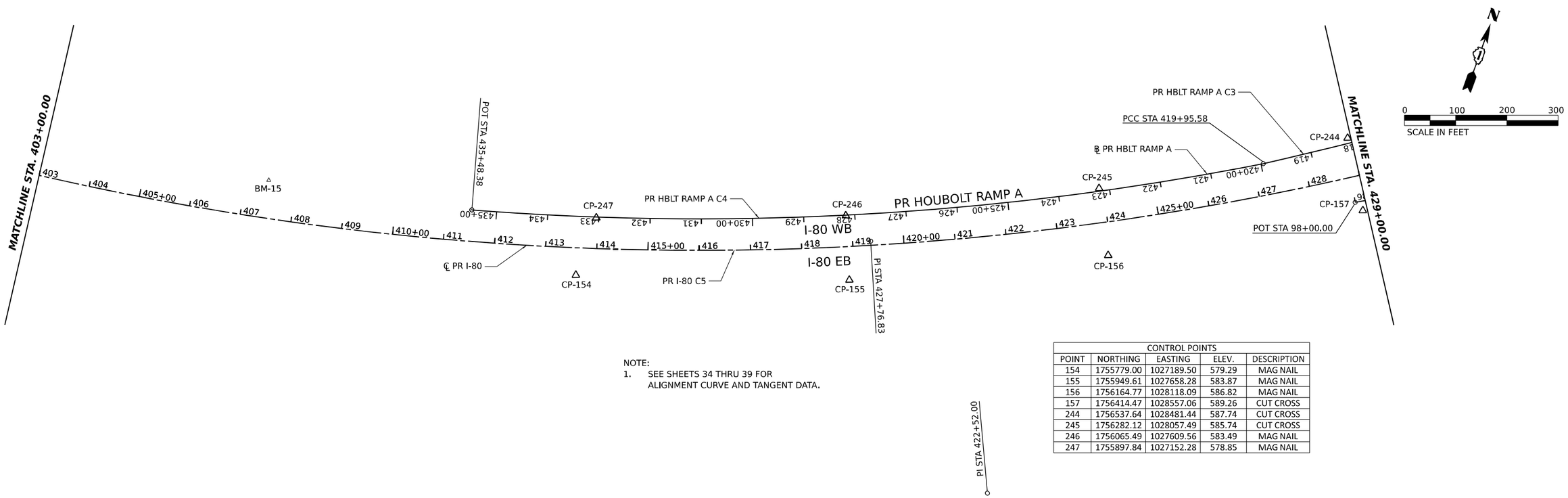

NOTE:
1. SEE SHEETS 34 THRU 39 FOR ALIGNMENT CURVE AND TANGENT DATA.

CONTROL POINTS				
POINT	NORTHING	EASTING	ELEV.	DESCRIPTION
154	1755779.00	1027189.50	579.29	MAG NAIL
155	1755949.61	1027658.28	583.87	MAG NAIL
156	1756164.77	1028118.09	586.82	MAG NAIL
157	1756414.47	1028557.06	589.26	CUT CROSS
244	1756537.64	1028481.44	587.74	CUT CROSS
245	1756282.12	1028057.49	585.74	CUT CROSS
246	1756065.49	1027609.56	583.49	MAG NAIL
247	1755897.84	1027152.28	578.85	MAG NAIL

MODEL: SHEET 6 - PR IB0_ALIGN
FILE NAME: C:\TRANSYSTEMS\PIV LOCAL\TRANSYSTEMS-PIV-01\DMS31452\62R19-SHT-ATB-06.DGN

exp.

USER NAME = SALASL	DESIGNED - CS	REVISED -	
	DRAWN - CS	REVISED -	
PLOT SCALE = 0.16666667 ' / IN.	CHECKED - TMH	REVISED -	
PLOT DATE = 11/12/2025	DATE - 11/12/2025	REVISED -	

STATE OF ILLINOIS
DEPARTMENT OF TRANSPORTATION

I–80
ALIGNMENT, TIES, AND BENCHMARKS

SCALE: 1"=100' | SHEET OF SHEETS | STA. TO STA.

F.A.I. RTE.	SECTION	COUNTY	TOTAL SHEETS	SHEET NO.
80	FAI 80 21 VLS	VARIOUS	467	17
		CONTRACT NO. 62R19		
		ILLINOIS	FED. AID PROJECT	

BENCHMARK				
NUMBER	NORTHING	EASTING	ELEV.	DESCRIPTION
16	1756836.10	1028909.50	591.589	Cut square on easterly side of concrete foundation for the overhead highway sign "Exit 126B" east of the gore at I-80 westbound and I-80 westbound on-ramp from Houbolt Road, south of the ramp on the north side of westbound I-80
17	1757031.00	1029423.10	592.424	Cut cross on top of southerly foundation bolt of the first light pole east of the gore at I-80 and I-80 off-ramp to Houbolt Road north of the ramp, on the south side of eastbound I-80
18	1757941.50	1030272.80	597.850	Cut cross on top of southerly foundation bolt of the first light pole west of the gore at I-80 east bound and I-80 on-ramp from Houbolt Road, north of the ramp, on the south side of eastbound I-80
19	1758086.60	1030108.40	595.744	Cut cross on top of northerly foundation bolt of the first light pole west of the gore at I-80 west bound and I-80 off-ramp to Houbolt Road, south of the ramp, on the north side of westbound I-80
20	1757185.60	1029983.50	579.588	Cut square in the top westerly side of concrete traffic signal foundation at the southeast quadrant of Houbolt Road and I-80 east bound on ramp
21	1757817.30	1029480.80	588.313	Cut square on top of concrete foundation for cantilevered traffic signal at the southwest quadrant of Houbolt Road and I-80 west bound on ramp
22	1757796.80	1029195.30	593.579	2" CWA aluminum disc on the top southerly side of the concrete foundation for the first light pole west of Houbolt Road on the north side of I-80 west bound on ramp

NOTE:
1. SEE SHEETS 34 THRU 39 FOR ALIGNMENT CURVE AND TANGENT DATA.

CONTROL POINTS				
POINT	NORTHING	EASTING	ELEV.	DESCRIPTION
14	1756830.63	1030231.94	569.29	SET MAG NAIL
15	1757135.88	1030004.45	578.51	SET MAG NAIL
16	1757370.26	1029847.17	582.09	SET MAG NAIL
17	1757523.74	1029744.41	583.55	SET CUT CROSS
23	1758540.89	1029411.33	593.05	SET CUT CROSS
24	1758286.23	1029392.19	591.70	SET CUT CROSS
25	1757921.53	1029485.48	588.21	SET CUT CROSS
26	1758361.21	1029320.65	591.82	SET MAG NAIL
28	1758065.06	1029354.35	593.47	SET MAG NAIL
30	1757652.48	1029119.69	587.51	SET BOAT SPIKE
31	1757128.80	1029027.56	593.55	SET 5/8" REBAR
32	1757715.05	1029535.06	587.09	SET MAG NAIL
33	1757456.81	1029687.38	584.90	SET MAG NAIL
37	1757197.68	1029915.16	580.78	SET BRASS DISC
38	1758089.69	1030105.32	594.49	SET CUT CROSS
40	1757090.88	1029938.14	578.63	SET MAG NAIL
41	1757375.05	1030182.76	579.48	SET BOAT SPIKE
42	1757745.32	1030294.16	589.95	SET 5/8" REBAR
43	1756986.66	1029587.01	582.44	SET CUT CROSS
44	1756846.01	1029235.72	590.37	SET 5/8" REBAR
46	1757263.70	1030712.76	583.89	SET CUT CROSS
47	1756464.94	1029609.34	585.12	SET CUT CROSS
49	1756824.02	1030233.06	569.01	SET PK NAIL

CONTROL POINTS				
POINT	NORTHING	EASTING	ELEV.	DESCRIPTION
158	1756675.33	1028971.09	592.07	CUT CROSS
159	1757016.52	1029337.73	598.25	CUT CROSS
160	1757365.98	1029690.54	605.16	CUT CROSS
161	1757744.82	1030033.79	603.77	CUT CROSS
240	1757831.37	1029939.80	603.70	CUT CROSS
241	1757452.90	1029598.21	604.46	CUT CROSS
242	1757100.13	1029240.58	596.92	CUT CROSS
243	1756798.40	1028877.54	590.22	CUT CROSS
1400	1756776.35	1028849.21	590.09	CUT CROSS
1401	1757148.38	1029004.69	592.65	CUT CROSS
1402	1757626.08	1029110.12	588.07	CUT CROSS
1403	1757970.17	1029631.46	583.94	CUT CROSS
1404	1758105.23	1030004.15	591.66	CUT CROSS
1406	1757601.94	1030293.98	586.49	MAG NAIL
1407	1757261.68	1030016.09	578.34	MAG NAIL
1408	1756971.23	1029518.80	585.14	MAG NAIL
1409	1758446.82	1029345.59	592.91	MAG NAIL
1410	1757973.40	1029433.87	589.19	MAG NAIL
1411	1757558.47	1029633.20	584.56	MAG NAIL
1412	1757086.29	1029949.35	577.97	MAG NAIL
1413	1756867.98	1030095.51	571.51	MAG NAIL
1414	1756925.17	1030137.89	572.05	MAG NAIL
1415	1757121.96	1030006.43	577.90	MAG NAIL
1416	1757604.42	1029683.78	583.99	MAG NAIL
1417	1758002.65	1029497.06	587.75	MAG NAIL
1418	1758447.76	1029412.60	591.78	MAG NAIL

MODEL: SHEET 7 - PR I80_ALIGN
FILE NAME: C:\TRANSYSTEMS\PW_LOCAL\TRANSYSTEMS-PW-01\DMS31452\62R19-SHT-ATB-07.DGN

exp.

USER NAME = SALASL	DESIGNED - CS	REVISED -	
	DRAWN - CS	REVISED -	
PLOT SCALE = 0.16666667 ' / IN.	CHECKED - TMH	REVISED -	
PLOT DATE = 11/12/2025	DATE - 11/12/2025	REVISED -	

STATE OF ILLINOIS
DEPARTMENT OF TRANSPORTATION

I-80
ALIGNMENT, TIES, AND BENCHMARKS

SCALE: 1"=100' | SHEET OF SHEETS | STA. TO STA.

F.A.I. RTE.	SECTION	COUNTY	TOTAL SHEETS	SHEET NO.
80	FAI 80 21 VLS	VARIOUS	467	18
		CONTRACT NO. 62R19		
		ILLINOIS FED. AID PROJECT		

CONTROL POINTS				
POINT	NORTHING	EASTING	ELEV.	DESCRIPTION
162	1758121.62	1030373.52	599.17	CUT CROSS
163	1758478.70	1030717.20	600.94	CUT CROSS
164	1758859.67	1031049.27	603.46	CUT CROSS
165	1759235.25	1031380.07	604.88	MAG NAIL
166	1759612.83	1031722.12	603.15	MAG NAIL
235	1759695.67	1031628.35	603.20	MAG NAIL
236	1759320.13	1031287.83	604.90	MAG NAIL
237	1758948.20	1030951.32	603.45	MAG NAIL
238	1758587.65	1030600.05	601.15	CUT CROSS
239	1758222.47	1030293.36	599.13	CUT CROSS
1405	1758064.49	1030406.54	597.23	MAG NAIL

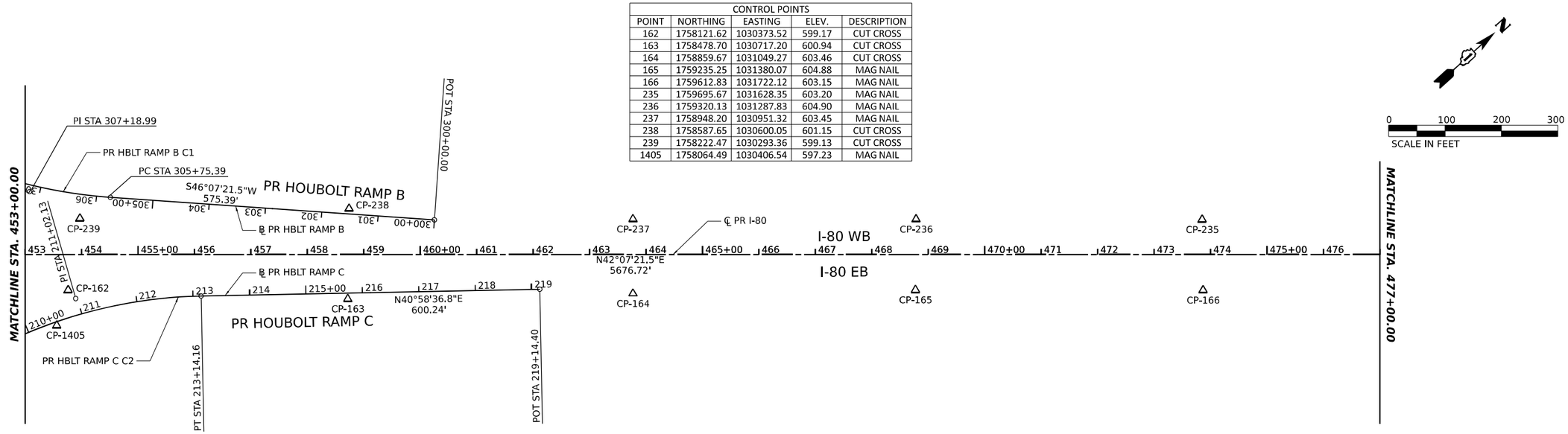

CONTROL POINTS				
POINT	NORTHING	EASTING	ELEVATION	DESCRIPTION
167	1759983.60	1032056.78	600.72	MAG NAIL
168	1760362.33	1032399.17	598.24	MAG NAIL
169	1760731.32	1032734.13	596.25	MAG NAIL
170	1761107.65	1033073.58	596.22	MAG NAIL
171	1761480.61	1033410.24	597.35	MAG NAIL
230	1761564.47	1033316.21	597.29	MAG NAIL
231	1761191.67	1032979.59	596.17	MAG NAIL
232	1760816.91	1032640.93	596.22	MAG NAIL
233	1760444.85	1032305.45	598.13	MAG NAIL
234	1760067.56	1031964.06	600.75	MAG NAIL

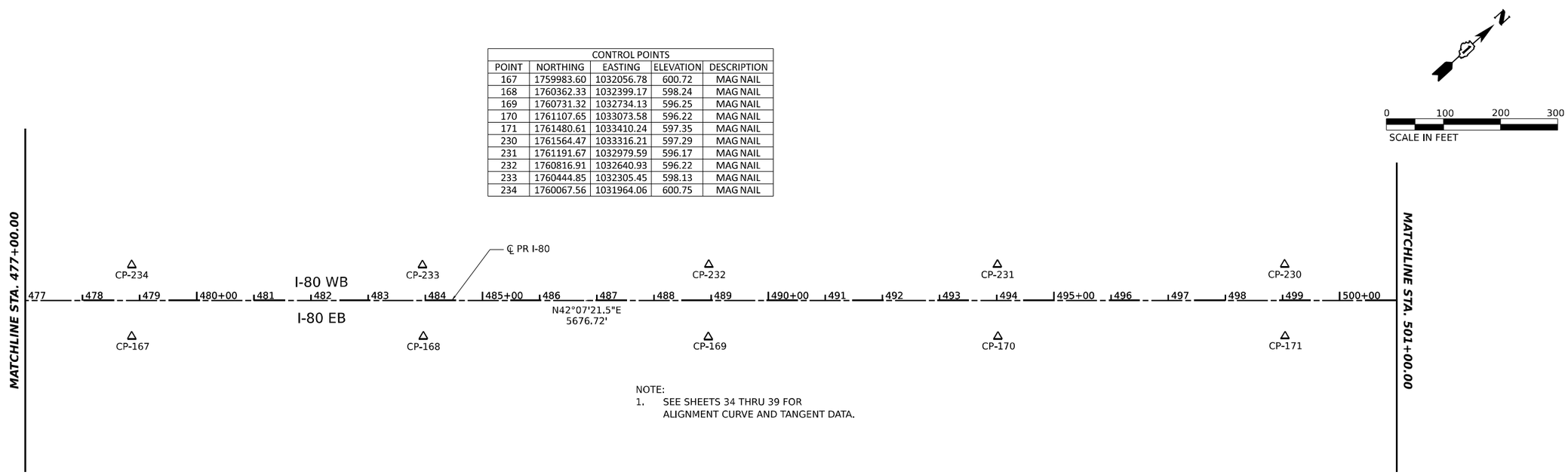

NOTE:
1. SEE SHEETS 34 THRU 39 FOR ALIGNMENT CURVE AND TANGENT DATA.

MODEL: SHEET 8 - PR IB0_ALIGN
FILE NAME: C:\TRANSYSTEMS\PIV LOCAL\TRANSYSTEMS-PIV-01\DMS31452\62R19-SHT-ATB-08.DGN

exp.

USER NAME = SALASL	DESIGNED - CS	REVISED -	
	DRAWN - CS	REVISED -	
PLOT SCALE = 0.16666667 ' / IN.	CHECKED - TMH	REVISED -	
PLOT DATE = 11/12/2025	DATE - 11/12/2025	REVISED -	

STATE OF ILLINOIS
DEPARTMENT OF TRANSPORTATION

I-80
ALIGNMENT, TIES, AND BENCHMARKS

SCALE: 1"=100' | SHEET OF SHEETS | STA. TO STA.

F.A.I. RTE.	SECTION	COUNTY	TOTAL SHEETS	SHEET NO.
80	FAI 80 21 VLS	VARIOUS	467	19
		CONTRACT NO. 62R19		
		ILLINOIS	FED. AID PROJECT	

CONTROL POINTS				
POINT	NORTHING	EASTING	ELEV.	DESCRIPTION
172	1761846.70	1033749.06	598.44	MAG NAIL
173	1762209.79	1034122.53	599.43	MAG NAIL
174	1762537.66	1034502.34	600.64	MAG NAIL
175	1762842.14	1034902.99	606.38	MAG NAIL
176	1763124.96	1035317.94	621.29	MAG NAIL
225	1763228.66	1035252.43	621.58	MAG NAIL
226	1762943.18	1034829.28	606.96	MAG NAIL
227	1762634.18	1034423.18	601.12	MAG NAIL
228	1762301.18	1034037.34	600.07	MAG NAIL
229	1761934.13	1033659.19	598.91	MAG NAIL

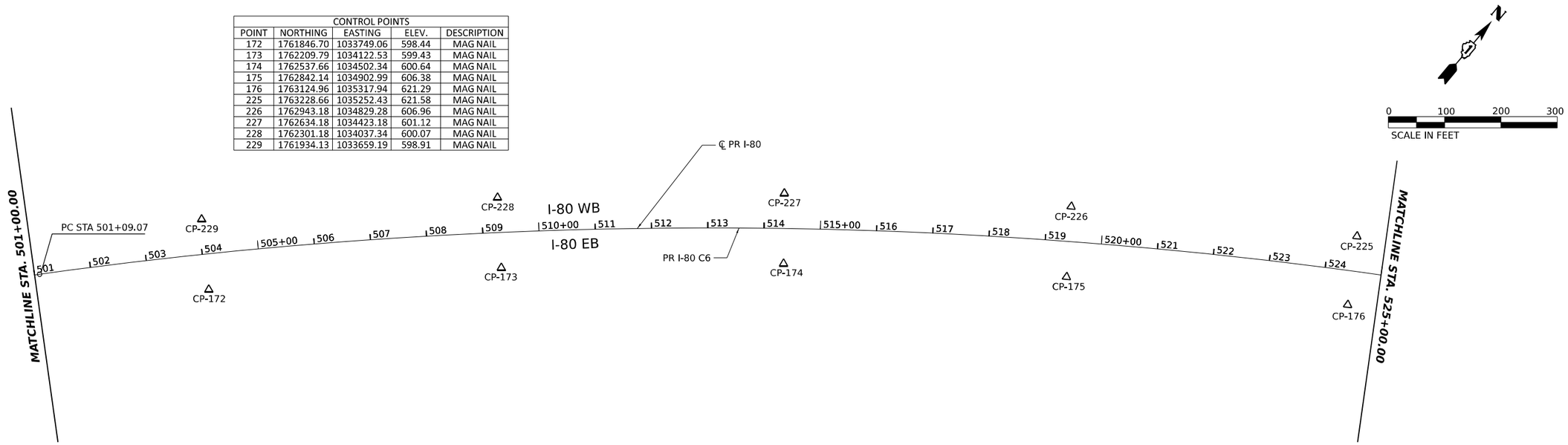

CONTROL POINTS				
POINT	NORTHING	EASTING	ELEV.	DESCRIPTION
177	1763383.39	1035755.51	633.50	MAG NAIL
178	1763571.47	1036115.36	638.71	MAG NAIL
179	1763781.84	1036581.92	639.12	MAG NAIL
180	1763963.21	1037051.08	633.75	MAG NAIL
181	1764114.46	1037529.00	624.70	MAG NAIL
220	1764234.34	1037493.50	625.11	MAG NAIL
221	1764079.89	1037011.19	634.25	MAG NAIL
222	1763896.55	1036534.78	639.59	MAG NAIL
223	1763681.66	1036061.99	639.27	MAG NAIL
224	1763490.71	1035695.63	633.89	MAG NAIL
1501	1763798.00	1037175.50	619.35	MAG NAIL
1502	1764032.42	1037524.96	622.68	MAG NAIL

BENCHMARK				
NUMBER	NORTHING	EASTING	ELEVATION	DESCRIPTION
23	1763720.30	1036133.30	641.669	Cut square on northwesterly corner of northerly bridge wall of westbound I-80 bridge over Joliet Junction bike trail

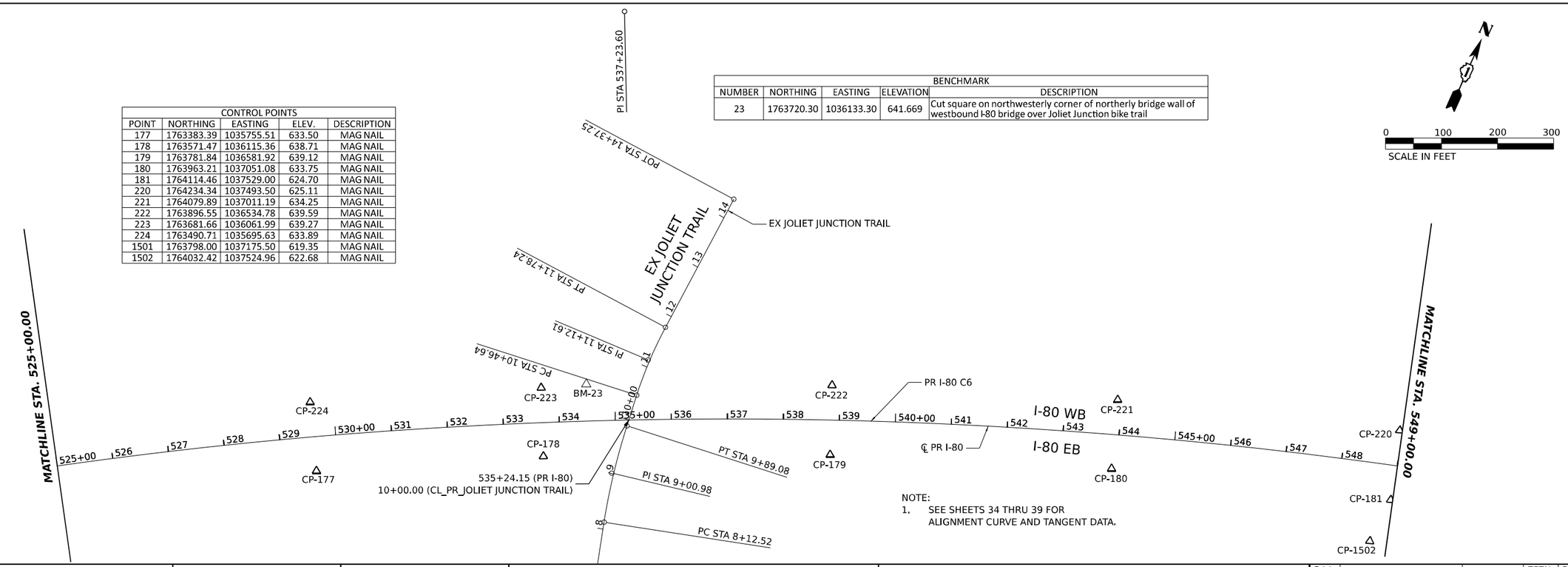

NOTE:
1. SEE SHEETS 34 THRU 39 FOR ALIGNMENT CURVE AND TANGENT DATA.

MODEL: SHEET 9 - PR IB0_ALIGN
FILE NAME: C:\TRANSYSTEMS\PRV LOCAL\TRANSYSTEMS-PRV-01\DMS31452\62R19-SHT-ATB-09.DGN

exp.

USER NAME = SALASL	DESIGNED - CS	REVISED -	
	DRAWN - CS	REVISED -	
PLOT SCALE = 0.16666667 ' / IN.	CHECKED - TMH	REVISED -	
PLOT DATE = 11/12/2025	DATE - 11/12/2025	REVISED -	

STATE OF ILLINOIS
DEPARTMENT OF TRANSPORTATION

I-80
ALIGNMENT, TIES, AND BENCHMARKS

SCALE: 1"=100' | SHEET OF SHEETS | STA. TO STA.

F.A.I. RTE.	SECTION	COUNTY	TOTAL SHEETS	SHEET NO.
80	FAI 80 21 VLS	VARIOUS	467	20
		CONTRACT NO. 62R19		
	ILLINOIS	FED. AID PROJECT		

CONTROL POINTS				
POINT	NORTHING	EASTING	ELEV.	DESCRIPTION
182	1764238.32	1038014.69	625.97	MAG NAIL
183	1764332.97	1038506.89	629.77	MAG NAIL
184	1764398.94	1039005.58	631.47	MAG NAIL
185	1764436.11	1039507.72	628.87	MAG NAIL
216	1764570.14	1039499.92	628.74	MAG NAIL
217	1764523.91	1038995.73	631.68	MAG NAIL
218	1764456.53	1038485.98	630.31	MAG NAIL
219	1764360.67	1037987.92	626.37	MAG NAIL
1503	1764163.68	1038006.24	627.36	MAG NAIL
1504	1764267.50	1038499.69	629.34	MAG NAIL
1505	1764337.66	1038998.55	630.88	MAG NAIL
1506	1764349.37	1039485.57	628.52	MAG NAIL

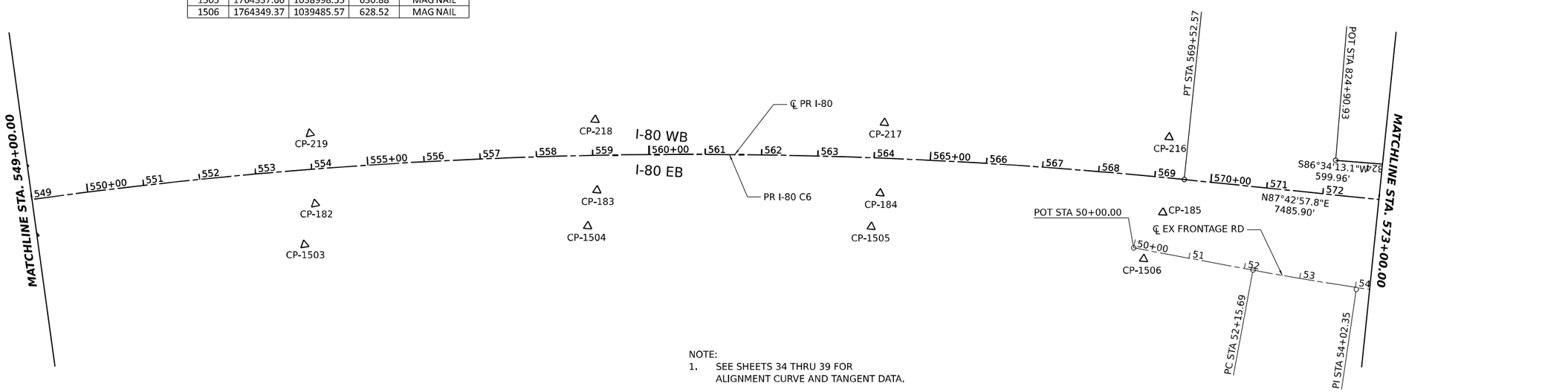

NOTE:
1. SEE SHEETS 34 THRU 39 FOR ALIGNMENT CURVE AND TANGENT DATA.

MODEL: SHEET 10 - PR I80_ALIGN
FILE NAME: C:\TRANSYSTEMS\PW_LOCAL\TRANSYSTEMS-PW-01\DMS31452\62R19-SHT-ATB-10.DGN

exp.

USER NAME = SALASL	DESIGNED - CS	REVISED -	
	DRAWN - CS	REVISED -	
PLOT SCALE = 0.16666667 ' / IN.	CHECKED - TMH	REVISED -	
PLOT DATE = 11/12/2025	DATE - 11/12/2025	REVISED -	

STATE OF ILLINOIS
DEPARTMENT OF TRANSPORTATION

I-80
ALIGNMENT, TIES, AND BENCHMARKS

SCALE: 1"=100' | SHEET OF SHEETS | STA. TO STA.

F.A.I. RTE.	SECTION	COUNTY	TOTAL SHEETS	SHEET NO.
80	FAI 80 21 VLS	VARIOUS	467	21

CONTRACT NO. 62R19

ILLINOIS | FED. AID PROJECT

BENCHMARK				
NUMBER	NORTHING	EASTING	ELEVATION	DESCRIPTION
24	1764491.70	1041444.10	634.804	Cut square on northwesterly corner of pier seat of most southerly Larkin Ave bridge pier on south side of eastbound I-80

CONTROL POINTS				
POINT	NORTHING	EASTING	ELEV.	DESCRIPTION
186	1764439.95	1040010.88	625.32	MAG NAIL
187	1764475.32	1040512.24	627.10	MAG NAIL
188	1764495.89	1041016.04	629.97	MAG NAIL
189	1764495.41	1041407.94	632.22	MAG NAIL
190	1764526.60	1041908.94	635.51	MAG NAIL
211	1764656.89	1041905.76	635.35	MAG NAIL
212	1764650.40	1041399.27	632.05	MAG NAIL
213	1764625.53	1041011.26	630.07	MAG NAIL
214	1764602.22	1040510.50	627.22	MAG NAIL
215	1764599.61	1040003.47	625.34	MAG NAIL
1507	1764341.44	1039928.07	626.56	MAG NAIL
1508	1764359.30	1040524.52	627.54	MAG NAIL
1509	1764099.28	1040903.36	631.22	MAG NAIL
1510	1763841.24	1041308.29	630.02	MAG NAIL
1513	1763743.13	1041472.11	632.71	CUT CROSS
1514	1764011.19	1041107.76	636.27	CUT CROSS
1515	1764355.11	1040737.40	628.21	MAG NAIL
1516	1764919.31	1040838.41	632.33	CUT CROSS
1517	1765187.66	1041175.01	637.41	CUT CROSS

CONTROL POINTS				
POINT	NORTHING	EASTING	ELEV.	DESCRIPTION
1520	1765360.67	1041431.44	640.27	CUT CROSS
1521	1764841.68	1041441.71	651.13	CUT CROSS
1522	1764992.90	1041317.29	643.55	CUT CROSS
1523	1764800.05	1040950.42	629.32	CUT CROSS
1524	1764365.22	1041045.25	629.69	CUT CROSS
1525	1764110.34	1041342.14	639.86	CUT CROSS
1526	1764321.80	1041445.35	649.76	CUT CROSS
1528	1763762.73	1041536.13	633.34	CUT CROSS
1529	1764100.69	1041765.04	637.40	CUT CROSS
1530	1764362.93	1042010.62	633.17	CUT CROSS
1531	1764310.06	1041524.06	649.65	CUT CROSS
1532	1764827.70	1041521.29	651.04	CUT CROSS
1533	1764816.02	1041940.73	634.77	CUT CROSS
1534	1765071.15	1041681.40	641.30	CUT CROSS
1536	1765390.72	1041506.27	640.08	CUT CROSS
1538	1765092.14	1041950.93	640.15	CUT CROSS
1539	1764765.36	1042292.31	637.34	CUT CROSS
1540	1764406.54	1042256.11	636.18	CUT CROSS
1541	1764030.22	1041946.34	635.72	CUT CROSS

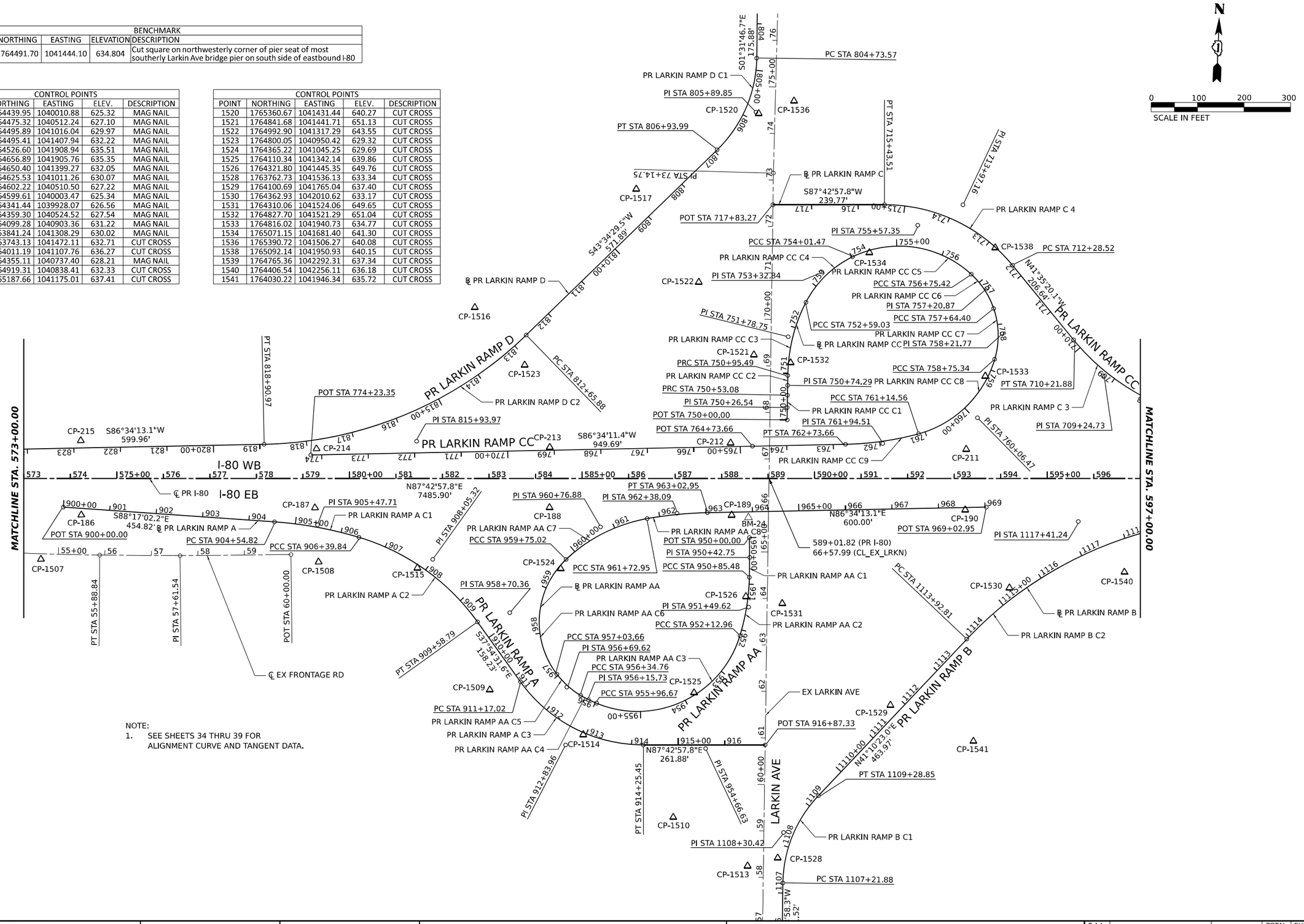

NOTE:
1. SEE SHEETS 34 THRU 39 FOR ALIGNMENT CURVE AND TANGENT DATA.

MODEL: SHEET 11 - PR I80_ALIGN
FILE NAME: C:\TRANSYSTEMS\PW_LOCAL\TRANSYSTEMS-PW-01\DMS31452\62R19-SHT-ATB-11.DGN

exp.

USER NAME = SALASL	DESIGNED - CS	REVISED -	
	DRAWN - CS	REVISED -	
PLOT SCALE = 0.16666667 ' / IN.	CHECKED - TMH	REVISED -	
PLOT DATE = 11/12/2025	DATE - 11/12/2025	REVISED -	

STATE OF ILLINOIS
DEPARTMENT OF TRANSPORTATION

I-80
ALIGNMENT, TIES, AND BENCHMARKS

SCALE: 1"=100' | SHEET OF SHEETS | STA. TO STA.

F.A.I. RTE.	SECTION	COUNTY	TOTAL SHEETS	SHEET NO.
80	FAI 80 21 VLS	VARIOUS	467	22
		CONTRACT NO. 62R19		
		ILLINOIS	FED. AID PROJECT	

CONTROL POINTS				
POINT	NORTHING	EASTING	ELEV.	DESCRIPTION
191	1764550.67	1042418.42	638.46	MAG NAIL
192	1764555.07	1042917.13	641.12	MAG NAIL
193	1764584.30	1043416.77	644.35	MAG NAIL
194	1764611.25	1043918.14	644.69	MAG NAIL
195	1764630.68	1044422.61	638.11	MAG NAIL
206	1764757.90	1044419.36	635.41	MAG NAIL
207	1764735.99	1043912.62	641.71	MAG NAIL
208	1764716.47	1043410.24	642.18	MAG NAIL
209	1764715.57	1042918.78	639.73	MAG NAIL
210	1764677.84	1042417.19	637.95	MAG NAIL
3001	1765368.87	1044090.49	611.13	MAG NAIL
3002	1764886.96	1044142.96	620.56	MAG NAIL
3003	1764448.57	1044116.95	632.95	MAG NAIL
3004	1763962.69	1044158.66	639.21	MAG NAIL

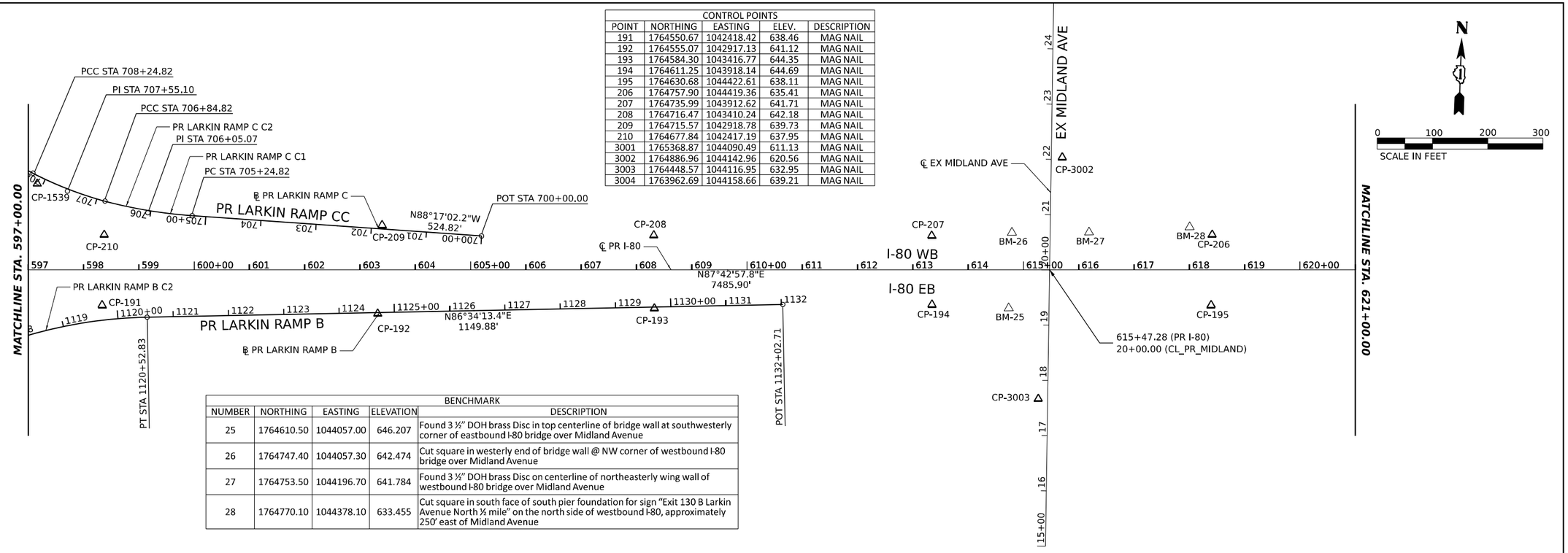

BENCHMARK				
NUMBER	NORTHING	EASTING	ELEVATION	DESCRIPTION
25	1764610.50	1044057.00	646.207	Found 3 ½" DOH brass Disc in top centerline of bridge wall at southwesterly corner of eastbound I-80 bridge over Midland Avenue
26	1764747.40	1044057.30	642.474	Cut square in westerly end of bridge wall @ NW corner of westbound I-80 bridge over Midland Avenue
27	1764753.50	1044196.70	641.784	Found 3 ½" DOH brass Disc on centerline of northeasterly wing wall of westbound I-80 bridge over Midland Avenue
28	1764770.10	1044378.10	633.455	Cut square in south face of south pier foundation for sign "Exit 130 B Larkin Avenue North ½ mile" on the north side of westbound I-80, approximately 250' east of Midland Avenue

CONTROL POINTS				
POINT	NORTHING	EASTING	ELEV.	DESCRIPTION
196	1764651.33	1044923.84	625.12	MAG NAIL
197	1764672.51	1045425.08	610.88	MAG NAIL
198	1764692.95	1045939.37	607.38	MAG NAIL
199	1764712.58	1046445.73	612.72	MAG NAIL
200	1764732.06	1046947.63	617.63	MAG NAIL
201	1764837.28	1046443.94	612.78	MAG NAIL
202	1764871.31	1046944.54	617.65	MAG NAIL
203	1764816.72	1045936.09	607.44	MAG NAIL
204	1764795.01	1045419.82	610.32	MAG NAIL
205	1764776.71	1044918.64	623.62	MAG NAIL
1601	1765457.52	1046710.54	636.94	CUT CROSS
1602	1764929.99	1046763.21	637.39	MAG NAIL
1603	1764635.88	1046770.57	635.67	MAG NAIL
1604	1764265.01	1046746.14	631.86	CUT CROSS

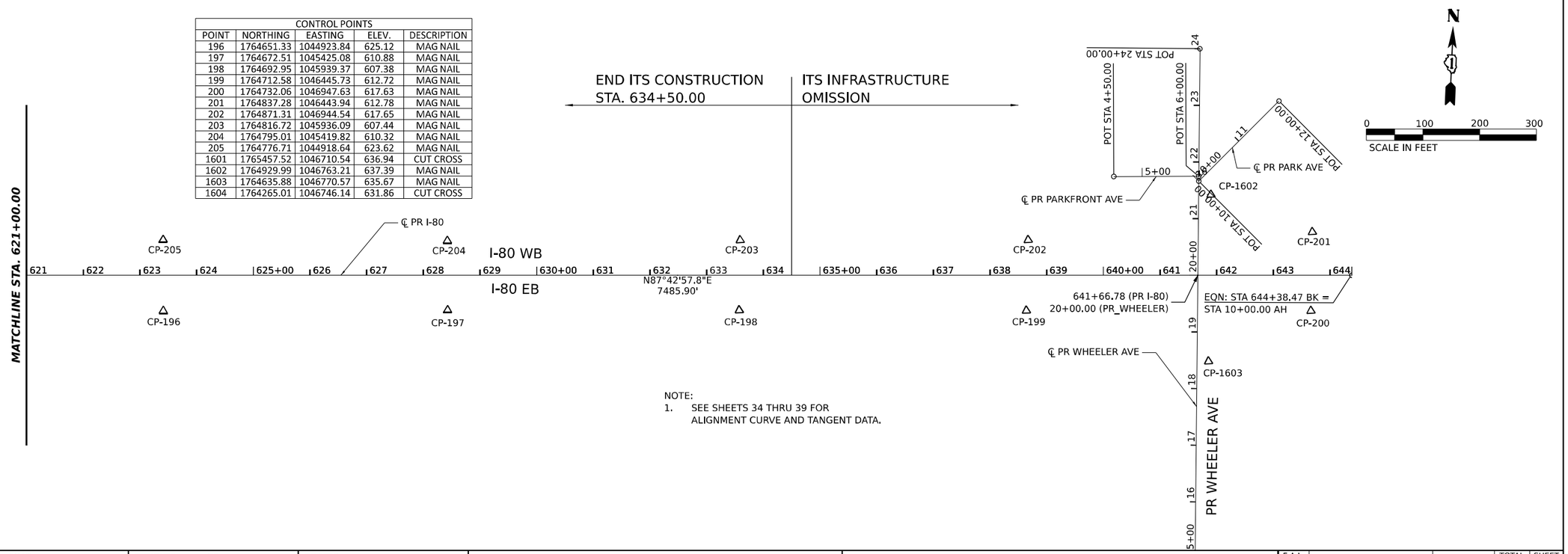

NOTE:
1. SEE SHEETS 34 THRU 39 FOR ALIGNMENT CURVE AND TANGENT DATA.

MODEL: SHEET 12 - PR I80_ALIGN
FILE NAME: C:\TRANSYSTEMS\PIV LOCAL\TRANSYSTEMS-PIV-01\DMS31452\62R19-SHT-ATB-12.DGN

exp.

USER NAME = SALASL	DESIGNED - CS	REVISED -	
	DRAWN - CS	REVISED -	
PLOT SCALE = 0.16666667 ' / IN.	CHECKED - TMH	REVISED -	
PLOT DATE = 11/12/2025	DATE - 11/12/2025	REVISED -	

STATE OF ILLINOIS
DEPARTMENT OF TRANSPORTATION

I-80
ALIGNMENT, TIES, AND BENCHMARKS

SCALE: 1"=100' | SHEET OF SHEETS | STA. TO STA.

F.A.I. RTE.	SECTION	COUNTY	TOTAL SHEETS	SHEET NO.
80	FAI 80 21 VLS	VARIOUS	467	23
		CONTRACT NO. 62R19		
	ILLINOIS	FED. AID PROJECT		

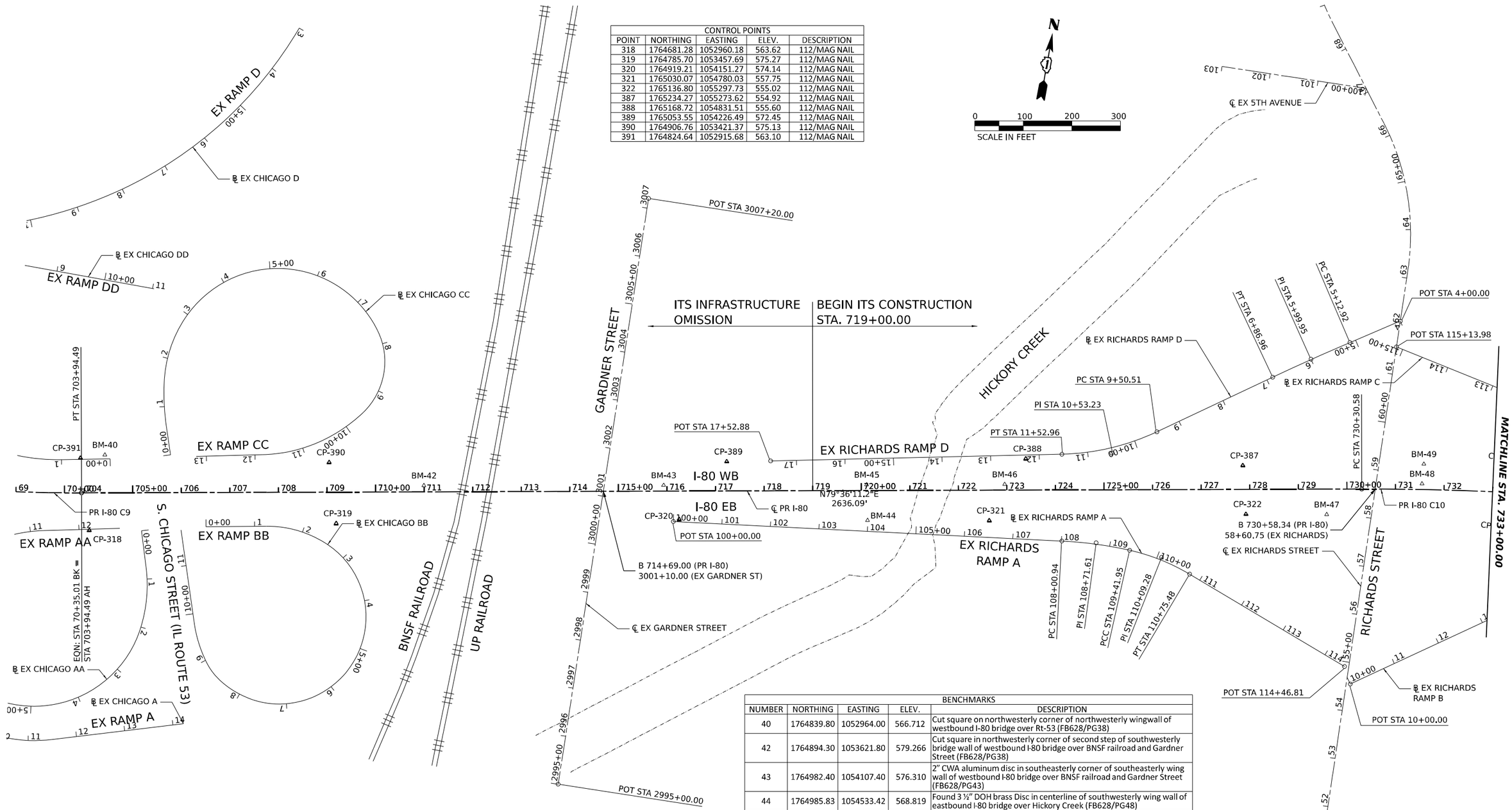

CONTROL POINTS				
POINT	NORTHING	EASTING	ELEV.	DESCRIPTION
318	1764681.28	1052960.18	563.62	112/MAG NAIL
319	1764785.70	1053457.69	575.27	112/MAG NAIL
320	1764919.21	1054151.27	574.14	112/MAG NAIL
321	1765030.07	1054780.03	557.75	112/MAG NAIL
322	1765136.80	1055297.73	555.02	112/MAG NAIL
387	1765234.27	1055273.62	554.92	112/MAG NAIL
388	1765168.72	1054831.51	555.60	112/MAG NAIL
389	1765053.55	1054226.49	572.45	112/MAG NAIL
390	1764906.76	1053421.37	575.13	112/MAG NAIL
391	1764824.64	1052915.68	563.10	112/MAG NAIL

BENCHMARKS				
NUMBER	NORTHING	EASTING	ELEV.	DESCRIPTION
40	1764839.80	1052964.00	566.712	Cut square on northwesterly corner of northwesterly wingwall of westbound I-80 bridge over Rt-53 (FB628/PG38)
42	1764894.30	1053621.80	579.266	Cut square in northwesterly corner of second step of southwesterly bridge wall of westbound I-80 bridge over BNSF railroad and Gardner Street (FB628/PG38)
43	1764982.40	1054107.40	576.310	2" CWA aluminum disc in southeasterly corner of southeasterly wing wall of westbound I-80 bridge over BNSF railroad and Gardner Street (FB628/PG43)
44	1764985.83	1054533.42	568.819	Found 3 ½" DOH brass Disc in centerline of southwesterly wing wall of eastbound I-80 bridge over Hickory Creek (FB628/PG48)
45	1765057.80	1054518.70	566.949	Cut square on southwesterly corner of southwesterly wing wall of westbound I-80 bridge over Hickory Creek (FB628/PG43)
46	1765108.94	1054798.13	558.719	Cut square on southeasterly corner of northeasterly wing wall of eastbound I-80 bridge over Hickory Creek (FB628/PG48)
47	1765165.41	1055461.70	559.001	Found 3 ½" DOH brass disc on southwesterly wing wall of eastbound I-80 bridge over Richards Street (FB628/PG48)
48	1765262.60	1055643.54	558.470	2" CWA aluminum disc in southeasterly wing wall of westbound I-80 bridge over Richards Street (FB628/PG48)
49	1765303.20	1055640.05	560.389	Found 3 ½" DOH brass disc on centerline of northeasterly wing wall of westbound I-80 bridge over Richards Street (FB628/PG48)

NOTE:
1. SEE SHEETS 34 THRU 39 FOR ALIGNMENT CURVE AND TANGENT DATA.

MODEL: SHEET 15 - PR I80_ALIGN
FILE NAME: C:\TRANSYSTEMS\PW_LOCAL\TRANSYSTEMS-PW-01\DMS31452\62R19-SHT-ATB-13.DGN

exp.

USER NAME = SALASL	DESIGNED - CS	REVISED -	
	DRAWN - CS	REVISED -	
PLOT SCALE = 0.16666667 ' / IN.	CHECKED - TMH	REVISED -	
PLOT DATE = 11/12/2025	DATE - 11/12/2025	REVISED -	

STATE OF ILLINOIS
DEPARTMENT OF TRANSPORTATION

I-80
ALIGNMENT, TIES, AND BENCHMARKS

SCALE: 1"=100' | SHEET OF SHEETS | STA. TO STA.

F.A.I. RTE.	SECTION	COUNTY	TOTAL SHEETS	SHEET NO.
80	FAI 80 21 VLS	VARIOUS	467	24
		CONTRACT NO. 62R19		
		ILLINOIS	FED. AID PROJECT	

BENCHMARKS				
NUMBER	NORTHING	EASTING	ELEV.	DESCRIPTION
50	1765373.10	1057829.40	581.791	2" CWA aluminum disc in northwest corner of southerly concrete sign foundation, for overhead sign "exit 132 Exit 133" approximately 750'± west of Rowell Avenue in the center median of I-80. (FB628/PG4)
51	1765287.46	1058477.12	609.843	Found 3 ½" DOH brass disc on centerline of southwesterly wing wall of eastbound I-80 bridge over Rowell Avenue (FB628/PG49)

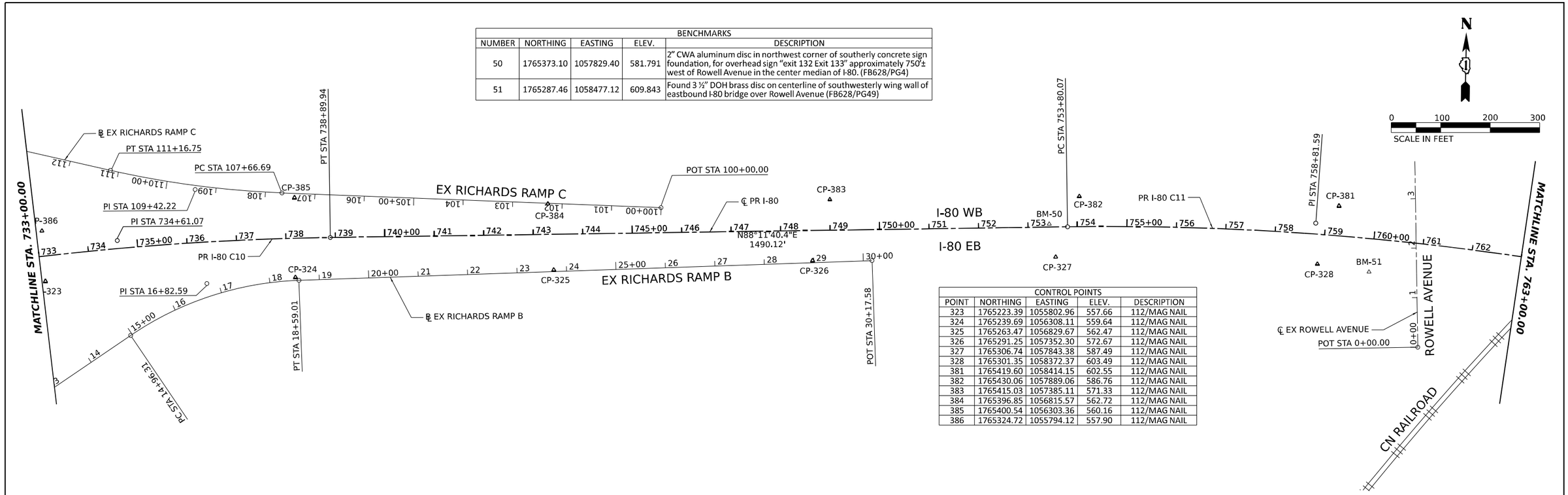

CONTROL POINTS				
POINT	NORTHING	EASTING	ELEV.	DESCRIPTION
323	1765223.39	1055802.96	557.66	112/MAG NAIL
324	1765239.69	1056308.11	559.64	112/MAG NAIL
325	1765263.47	1056829.67	562.47	112/MAG NAIL
326	1765291.25	1057352.30	572.67	112/MAG NAIL
327	1765306.74	1057843.38	587.49	112/MAG NAIL
328	1765301.35	1058372.37	603.49	112/MAG NAIL
381	1765419.60	1058414.15	602.55	112/MAG NAIL
382	1765430.06	1057889.06	586.76	112/MAG NAIL
383	1765415.03	1057385.11	571.33	112/MAG NAIL
384	1765396.85	1056815.57	562.72	112/MAG NAIL
385	1765400.54	1056303.36	560.16	112/MAG NAIL
386	1765324.72	1055794.12	557.90	112/MAG NAIL

BENCHMARKS				
NUMBER	NORTHING	EASTING	ELEV.	DESCRIPTION
52	1765221.00	1059036.47	624.833	2" CWA aluminum disc in southeasterly wing wall of east bound I-80 bridge over Rowell Avenue. (FB628/PG51)

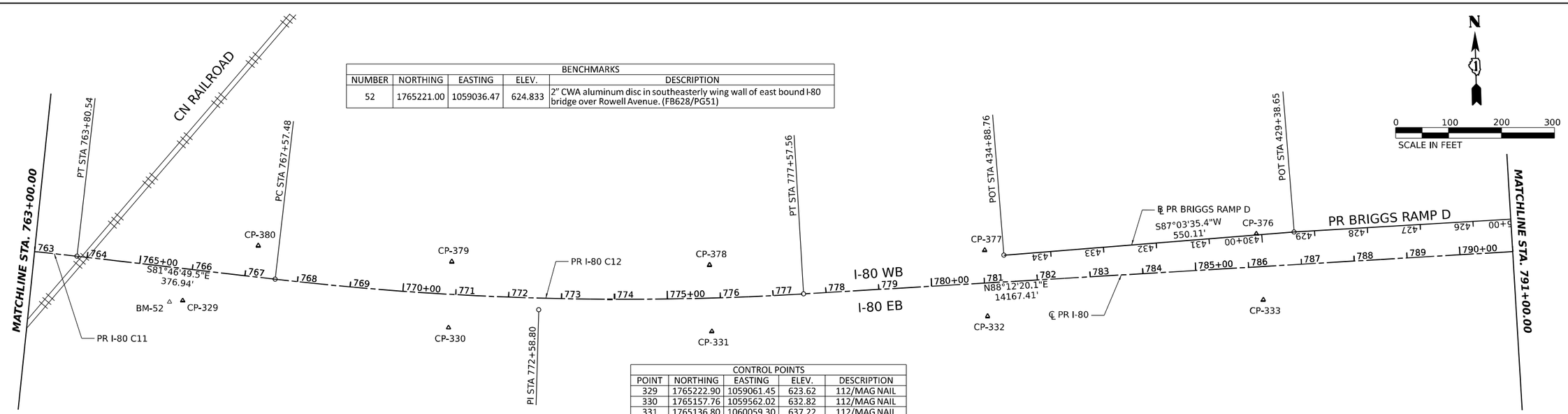

CONTROL POINTS				
POINT	NORTHING	EASTING	ELEV.	DESCRIPTION
329	1765222.90	1059061.45	623.62	112/MAG NAIL
330	1765157.76	1059562.02	632.82	112/MAG NAIL
331	1765136.80	1060059.30	637.22	112/MAG NAIL
332	1765150.86	1060580.81	641.41	112/MAG NAIL
333	1765167.02	1061102.66	645.58	112/MAG NAIL
376	1765291.84	1061092.68	645.30	112/MAG NAIL
377	1765275.59	1060578.87	641.05	112/MAG NAIL
378	1765262.33	1060058.39	636.65	112/MAG NAIL
379	1765282.42	1059571.74	631.90	112/MAG NAIL
380	1765322.75	1059207.15	625.25	112/MAG NAIL

NOTE:
1. SEE SHEETS 34 THRU 39 FOR ALIGNMENT CURVE AND TANGENT DATA.

MODEL: SHEET 16 - PR I80_ALIGN
FILE NAME: C:\TRANSYSTEMS\PIV_LOCAL\TRANSYSTEMS-PIV-01\DMS31452\62R19-SHT-ATB-14.DGN

exp.

USER NAME = SALASL	DESIGNED - CS	REVISED -	
	DRAWN - CS	REVISED -	
PLOT SCALE = 0.16666667 ' / IN.	CHECKED - TMH	REVISED -	
PLOT DATE = 11/12/2025	DATE - 11/12/2025	REVISED -	

STATE OF ILLINOIS
DEPARTMENT OF TRANSPORTATION

I-80
ALIGNMENT, TIES, AND BENCHMARKS

SCALE: 1"=100' | SHEET OF SHEETS | STA. TO STA.

F.A.I. RTE.	SECTION	COUNTY	TOTAL SHEETS	SHEET NO.
80	FAI 80 21 VLS	VARIOUS	467	25
		CONTRACT NO. 62R19		
	ILLINOIS	FED. AID PROJECT		

CONTROL POINTS				
POINT	NORTHING	EASTING	ELEV.	DESCRIPTION
334	1765183.53	1061617.55	649.20	112/MAG NAIL
335	1765198.29	1062123.78	649.26	112/MAG NAIL
336	1765202.77	1062630.82	645.33	112/MAG NAIL
337	1765230.77	1063134.10	640.89	112/MAG NAIL
338	1765247.67	1063648.25	639.68	112/MAG NAIL
339	1765263.02	1064155.47	639.78	112/MAG NAIL
370	1765387.52	1064148.01	639.76	112/MAG NAIL
371	1765371.45	1063637.64	639.65	112/MAG NAIL
372	1765355.43	1063125.41	641.01	112/MAG NAIL
373	1765354.55	1062620.28	645.68	112/MAG NAIL
374	1765327.09	1062104.08	649.20	112/MAG NAIL
375	1765307.99	1061606.59	649.05	112/MAG NAIL

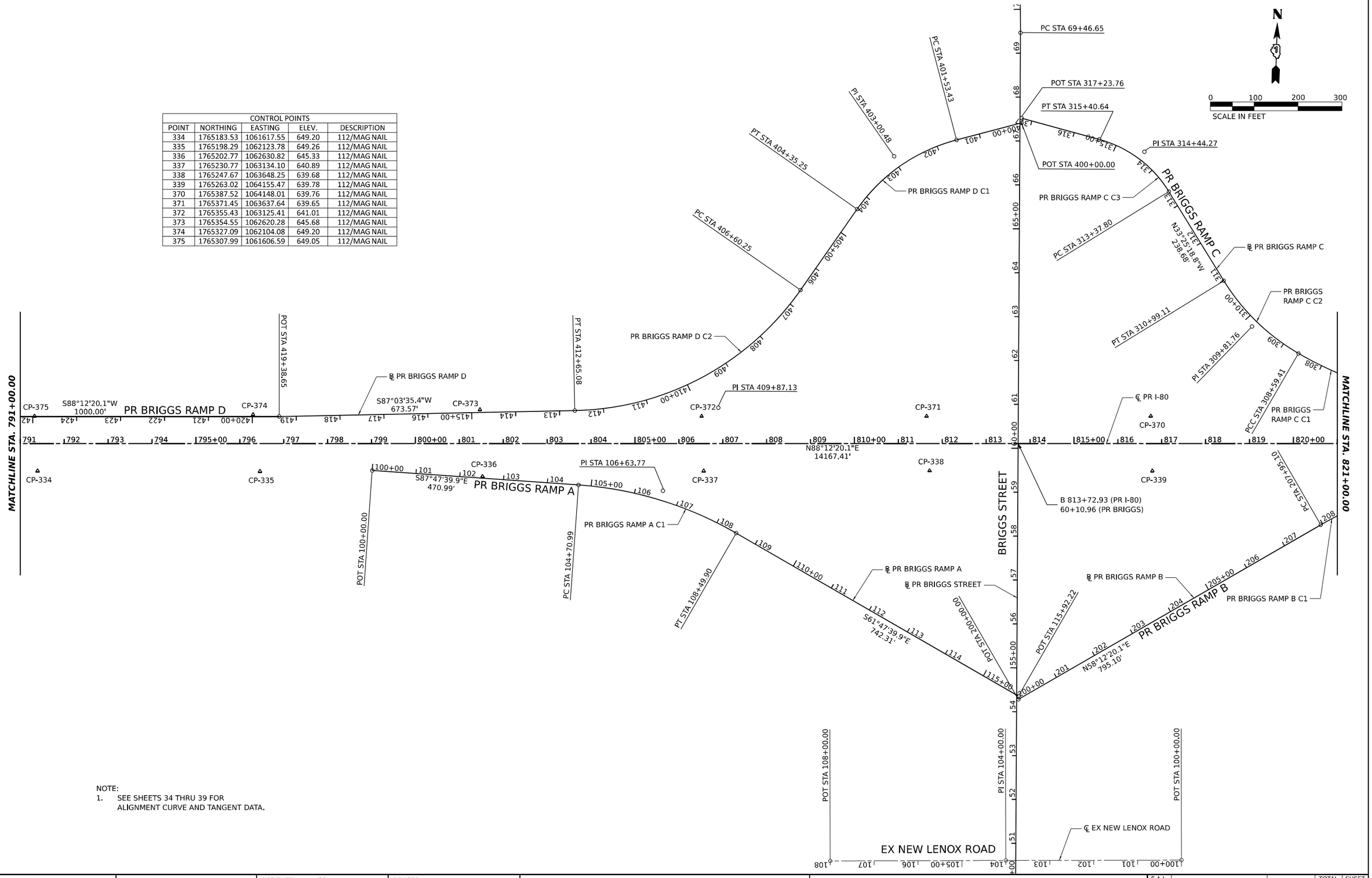

NOTE:
1. SEE SHEETS 34 THRU 39 FOR ALIGNMENT CURVE AND TANGENT DATA.

MODEL: SHEET 17 - PR I80_ALIGN
FILE NAME: C:\TRANSYSTEMS\PW_LOCAL\TRANSYSTEMS-PW-01\DMS31452\62R19-SHT-ATB-15.DGN

exp.

USER NAME = SALASL	DESIGNED - CS	REVISED -	
	DRAWN - CS	REVISED -	
PLOT SCALE = 0.16666667 ' / IN.	CHECKED - TMH	REVISED -	
PLOT DATE = 11/12/2025	DATE - 11/12/2025	REVISED -	

STATE OF ILLINOIS
DEPARTMENT OF TRANSPORTATION

I-80
ALIGNMENT, TIES, AND BENCHMARKS

SCALE: 1"=100' | SHEET OF SHEETS | STA. TO STA.

F.A.I. RTE.	SECTION	COUNTY	TOTAL SHEETS	SHEET NO.
80	FAI 80 21 VLS	VARIOUS	467	26

CONTRACT NO. 62R19

ILLINOIS | FED. AID PROJECT

N

0 100 200 300

SCALE IN FEET

CONTROL POINTS				
POINT	NORTHING	EASTING	ELEV.	DESCRIPTION
340	1765278.86	1064657.60	639.80	112/MAG NAIL
341	1765280.85	1065154.40	639.48	112/MAG NAIL
342	1765309.52	1065658.23	639.78	112/MAG NAIL
343	1765325.68	1066172.80	640.36	112/MAG NAIL
344	1765341.86	1066690.57	645.16	112/MAG NAIL
345	1765357.45	1067200.24	649.65	112/MAG NAIL
364	1765483.91	1067191.50	649.55	112/MAG NAIL
365	1765467.30	1066679.26	644.98	112/MAG NAIL
366	1765451.05	1066167.86	640.24	112/MAG NAIL
367	1765434.86	1065652.80	639.73	112/MAG NAIL
368	1765422.19	1065149.34	639.67	112/MAG NAIL
369	1765403.36	1064647.40	639.70	112/MAG NAIL

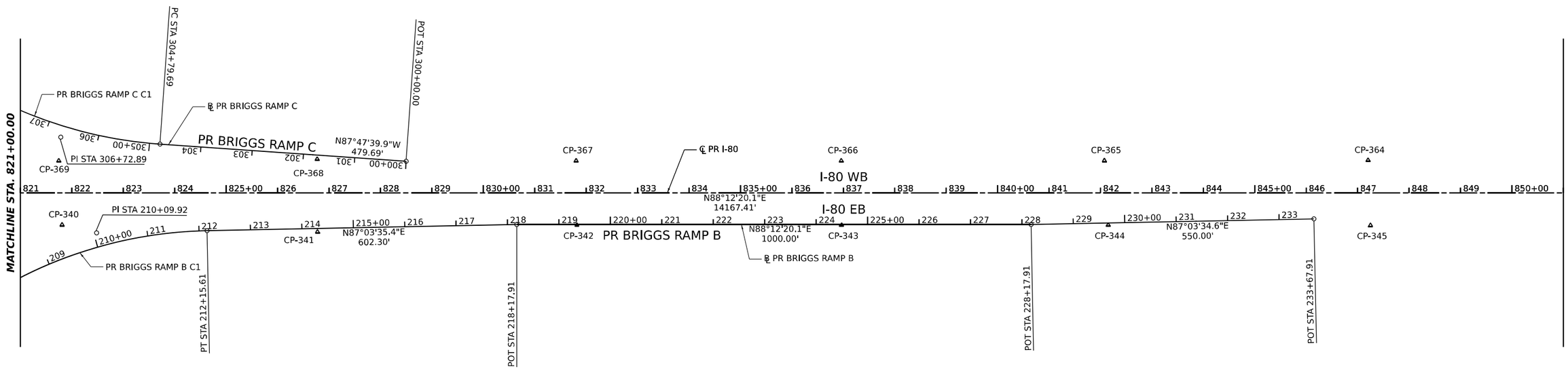

NOTE:
1. SEE SHEETS 34 THRU 39 FOR ALIGNMENT CURVE AND TANGENT DATA.

MODEL: SHEET 18 - PR I80_ALIGN
FILE NAME: C:\TRANSYSTEMS\PW_LOCAL\TRANSYSTEMS-PW-01\DMS31452\62R19-SHT-ATB-16.DGN

exp.

USER NAME = SALASL	DESIGNED - CS	REVISED -	
	DRAWN - CS	REVISED -	
PLOT SCALE = 0.16666667 ' / IN.	CHECKED - TMH	REVISED -	
PLOT DATE = 11/12/2025	DATE - 11/12/2025	REVISED -	

STATE OF ILLINOIS
DEPARTMENT OF TRANSPORTATION

I-80
ALIGNMENT, TIES, AND BENCHMARKS

SCALE: 1"=100' | SHEET OF SHEETS | STA. TO STA.

F.A.I. RTE.	SECTION	COUNTY	TOTAL SHEETS	SHEET NO.
80	FAI 80 21 VLS	VARIOUS	467	27

CONTRACT NO. 62R19

ILLINOIS | FED. AID PROJECT

BENCHMARKS				
NUMBER	NORTHING	EASTING	ELEV.	DESCRIPTION
53	1765366.75	1068348.39	647.989	2" CWA aluminum disc in southerly concrete pier foundation for overhead digital sign on south side of eastbound I-80, approximately 700'± west of Cherry Hill Road. (FB626/PG40)

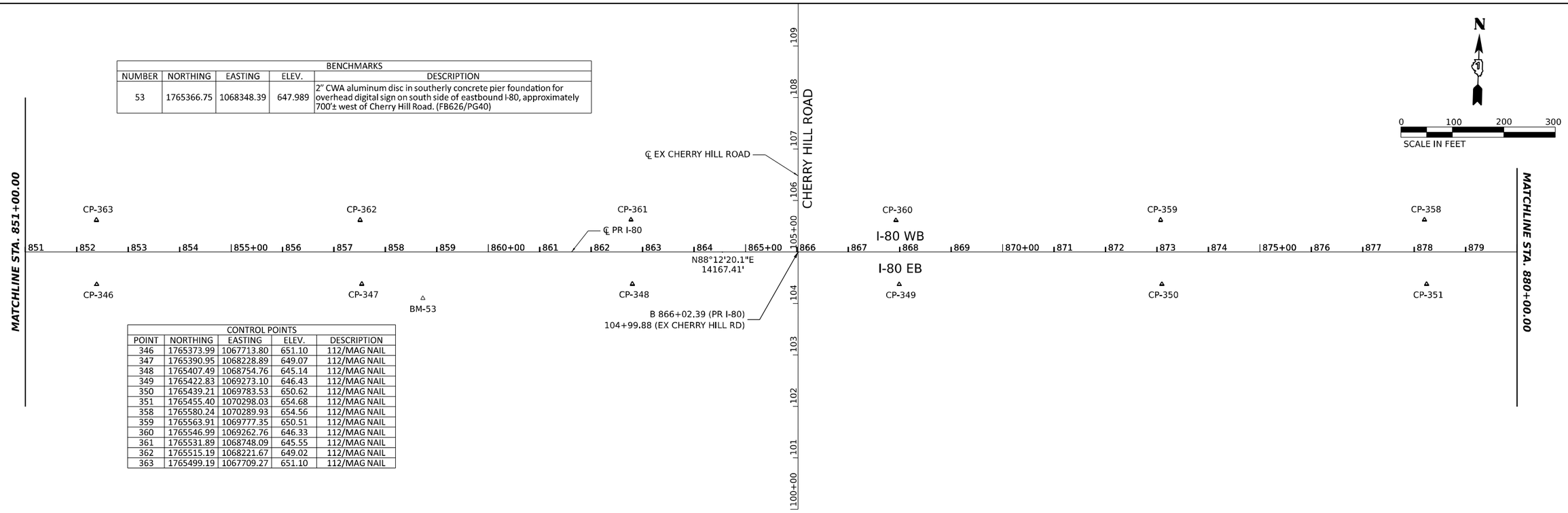

CONTROL POINTS				
POINT	NORTHING	EASTING	ELEV.	DESCRIPTION
346	1765373.99	1067713.80	651.10	112/MAG NAIL
347	1765390.95	1068228.89	649.07	112/MAG NAIL
348	1765407.49	1068754.76	645.14	112/MAG NAIL
349	1765422.83	1069273.10	646.43	112/MAG NAIL
350	1765439.21	1069783.53	650.62	112/MAG NAIL
351	1765455.40	1070298.03	654.68	112/MAG NAIL
358	1765580.24	1070289.93	654.56	112/MAG NAIL
359	1765563.91	1069777.35	650.51	112/MAG NAIL
360	1765546.99	1069262.76	646.33	112/MAG NAIL
361	1765531.89	1068748.09	645.55	112/MAG NAIL
362	1765515.19	1068221.67	649.02	112/MAG NAIL
363	1765499.19	1067709.27	651.10	112/MAG NAIL

BENCHMARKS				
NUMBER	NORTHING	EASTING	ELEV.	DESCRIPTION
54	1765492.93	1072595.01	651.559	Cut square in top of NE face of northerly concrete sign base for sign "Exit 137, RT 30, Maple St, 1 mile" on the south side of eastbound I-80, approximately 1700' west of Gougar Road & 3500' east of Cherry Hill Road. (FB626/PG41)

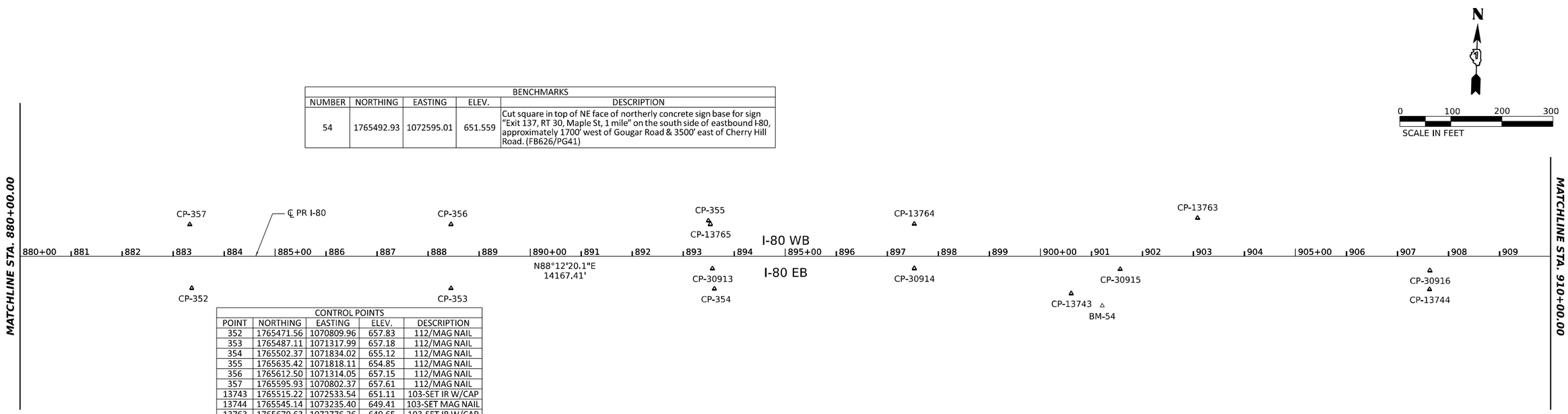

CONTROL POINTS				
POINT	NORTHING	EASTING	ELEV.	DESCRIPTION
352	1765471.56	1070809.96	657.83	112/MAG NAIL
353	1765487.11	1071317.99	657.18	112/MAG NAIL
354	1765502.37	1071834.02	655.12	112/MAG NAIL
355	1765635.42	1071818.11	654.85	112/MAG NAIL
356	1765612.50	1071314.05	657.15	112/MAG NAIL
357	1765595.93	1070802.37	657.61	112/MAG NAIL
13743	1765515.22	1072533.54	651.11	103-SET IR W/CAP
13744	1765545.14	1073235.40	649.41	103-SET MAG NAIL
13763	1765670.63	1072776.26	649.65	103-SET IR W/CAP
13764	1765641.69	1072221.60	653.32	103-SET MAG NAIL
13765	1765629.09	1071822.37	655.03	103-SET MAG NAIL
30913	1765542.04	1071828.97	654.92	103-SET IR W/CAP
30914	1765554.82	1072224.41	653.20	103-SET IR W/CAP
30915	1765565.51	1072628.13	651.88	103-SET MAG NAIL
30916	1765582.42	1073234.69	649.54	103-SET MAG NAIL

NOTE:
1. SEE SHEETS 34 THRU 39 FOR ALIGNMENT CURVE AND TANGENT DATA.

MODEL: SHEET 19 - PR I80_ALIGN
FILE NAME: C:\TRANSYSTEMS\PIV_LOCAL\TRANSYSTEMS-PIV-01\DMS31452\62R19-SHT-ATB-17.DGN

exp.

USER NAME = SALASL	DESIGNED - CS	REVISED -	
	DRAWN - CS	REVISED -	
PLOT SCALE = 0.16666667 ' / IN.	CHECKED - TMH	REVISED -	
PLOT DATE = 11/12/2025	DATE - 11/12/2025	REVISED -	

STATE OF ILLINOIS
DEPARTMENT OF TRANSPORTATION

I-80
ALIGNMENT, TIES, AND BENCHMARKS

SCALE: 1"=100' | SHEET OF SHEETS | STA. TO STA.

F.A.I. RTE.	SECTION	COUNTY	TOTAL SHEETS	SHEET NO.
80	FAI 80 21 VLS	VARIOUS	467	28
		CONTRACT NO. 62R19		
		ILLINOIS	FED. AID PROJECT	

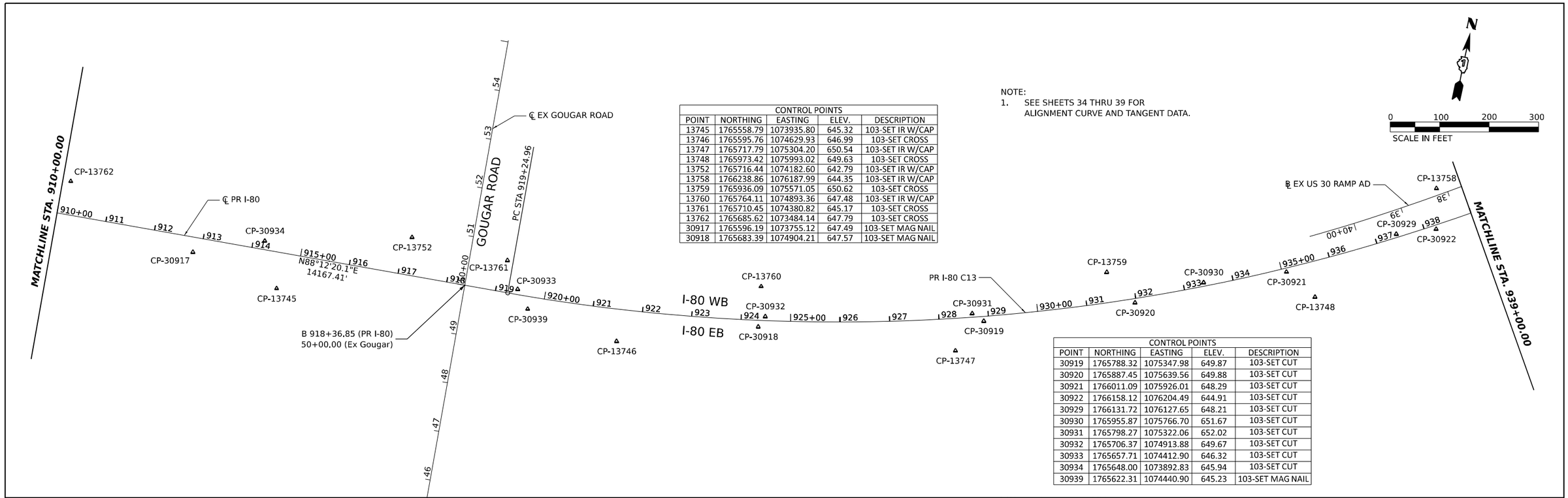

NOTE:
1. SEE SHEETS 34 THRU 39 FOR ALIGNMENT CURVE AND TANGENT DATA.

CONTROL POINTS				
POINT	NORTHING	EASTING	ELEV.	DESCRIPTION
13745	1765558.79	1073935.80	645.32	103-SET IR W/CAP
13746	1765595.76	1074629.93	646.99	103-SET CROSS
13747	1765717.79	1075304.20	650.54	103-SET IR W/CAP
13748	1765973.42	1075993.02	649.63	103-SET CROSS
13752	1765716.44	1074182.60	642.79	103-SET IR W/CAP
13758	1766238.86	1076187.99	644.35	103-SET IR W/CAP
13759	1765936.09	1075571.05	650.62	103-SET CROSS
13760	1765764.11	1074893.36	647.48	103-SET IR W/CAP
13761	1765710.45	1074380.82	645.17	103-SET CROSS
13762	1765685.62	1073484.14	647.79	103-SET CROSS
30917	1765596.19	1073755.12	647.49	103-SET MAG NAIL
30918	1765683.39	1074904.21	647.57	103-SET MAG NAIL

CONTROL POINTS				
POINT	NORTHING	EASTING	ELEV.	DESCRIPTION
30919	1765788.32	1075347.98	649.87	103-SET CUT
30920	1765887.45	1075639.56	649.88	103-SET CUT
30921	1766011.09	1075926.01	648.29	103-SET CUT
30922	1766158.12	1076204.49	644.91	103-SET CUT
30929	1766131.72	1076127.65	648.21	103-SET CUT
30930	1765955.87	1075766.70	651.67	103-SET CUT
30931	1765798.27	1075322.06	652.02	103-SET CUT
30932	1765706.37	1074913.88	649.67	103-SET CUT
30933	1765657.71	1074412.90	646.32	103-SET CUT
30934	1765648.00	1073892.83	645.94	103-SET CUT
30939	1765622.31	1074440.90	645.23	103-SET MAG NAIL

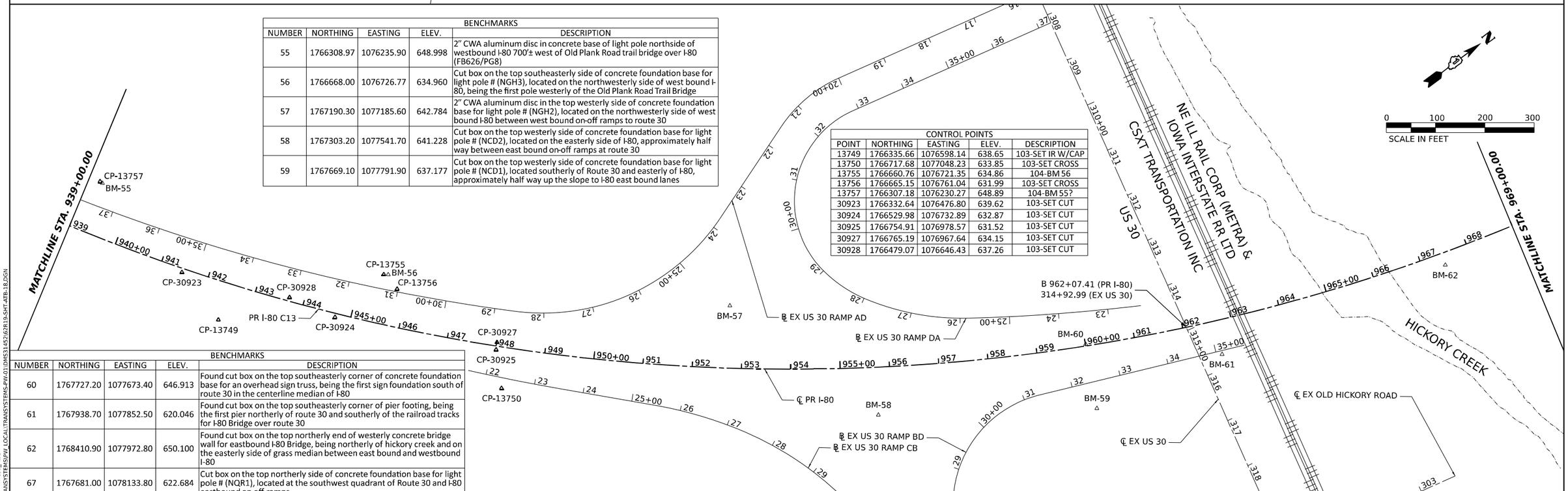

BENCHMARKS				
NUMBER	NORTHING	EASTING	ELEV.	DESCRIPTION
55	1766308.97	1076235.90	648.998	2" CWA aluminum disc in concrete base of light pole northside of westbound I-80 700'± west of Old Plank Road trail bridge over I-80 (FB626/PG8)
56	1766668.00	1076726.77	634.960	Cut box on the top southeasterly side of concrete foundation base for light pole # (NGH3), located on the northwesterly side of west bound I-80, being the first pole westerly of the Old Plank Road Trail Bridge
57	1767190.30	1077185.60	642.784	2" CWA aluminum disc in the top westerly side of concrete foundation base for light pole # (NGH2), located on the northwesterly side of west bound I-80 between west bound on-off ramps to route 30
58	1767303.20	1077541.70	641.228	Cut box on the top westerly side of concrete foundation base for light pole # (NCD2), located on the easterly side of I-80, approximately half way between east bound on-off ramps at route 30
59	1767669.10	1077791.90	637.177	Cut box on the top westerly side of concrete foundation base for light pole # (NCD1), located southerly of Route 30 and easterly of I-80, approximately half way up the slope to I-80 east bound lanes

CONTROL POINTS				
POINT	NORTHING	EASTING	ELEV.	DESCRIPTION
13749	1766335.66	1076598.14	638.65	103-SET IR W/CAP
13750	1766717.68	1077048.23	633.85	103-SET CROSS
13755	1766660.76	1076721.35	634.86	104-BM 56
13756	1766665.15	1076761.04	631.99	103-SET CROSS
13757	1766307.18	1076230.27	648.89	104-BM 55?
30923	1766332.64	1076476.80	639.62	103-SET CUT
30924	1766529.98	1076732.89	632.87	103-SET CUT
30925	1766754.91	1076978.57	631.52	103-SET CUT
30927	1766765.19	1076967.64	634.15	103-SET CUT
30928	1766479.07	1076646.43	637.26	103-SET CUT

BENCHMARKS				
NUMBER	NORTHING	EASTING	ELEV.	DESCRIPTION
60	1767727.20	1077673.40	646.913	Found cut box on the top southeasterly corner of concrete foundation base for an overhead sign truss, being the first sign foundation south of route 30 in the centerline median of I-80
61	1767938.70	1077852.50	620.046	Found cut box on the top southeasterly corner of pier footing, being the first pier northerly of route 30 and southerly of the railroad tracks for I-80 Bridge over route 30
62	1768410.90	1077972.80	650.100	Found cut box on the top northerly end of westerly concrete bridge wall for eastbound I-80 Bridge, being northerly of hickory creek and on the easterly side of grass median between east bound and westbound I-80
67	1767681.00	1078133.80	622.684	Cut box on the top northerly side of concrete foundation base for light pole # (NQR1), located at the southwest quadrant of Route 30 and I-80 eastbound on-off ramps

MODEL: SHEET 20 - PR I80_ALIGN
FILE NAME: C:\TRANSYSTEMS\PW_LOCAL\TRANSYSTEMS-PW-01\DMS31452\62R19-SHT-ATB-18.DGN

exp.

USER NAME = SALASL	DESIGNED - CS	REVISED -	
	DRAWN - CS	REVISED -	
PLOT SCALE = 0.16666667 ' / IN.	CHECKED - TMH	REVISED -	
PLOT DATE = 11/12/2025	DATE - 11/12/2025	REVISED -	

STATE OF ILLINOIS
DEPARTMENT OF TRANSPORTATION

I-80
ALIGNMENT, TIES, AND BENCHMARKS

SCALE: 1"=100' | SHEET OF SHEETS | STA. TO STA.

F.A.I. RTE.	SECTION	COUNTY	TOTAL SHEETS	SHEET NO.
80	FAI 80 21 VLS	VARIOUS	467	29

CONTRACT NO. 62R19

ILLINOIS | FED. AID PROJECT

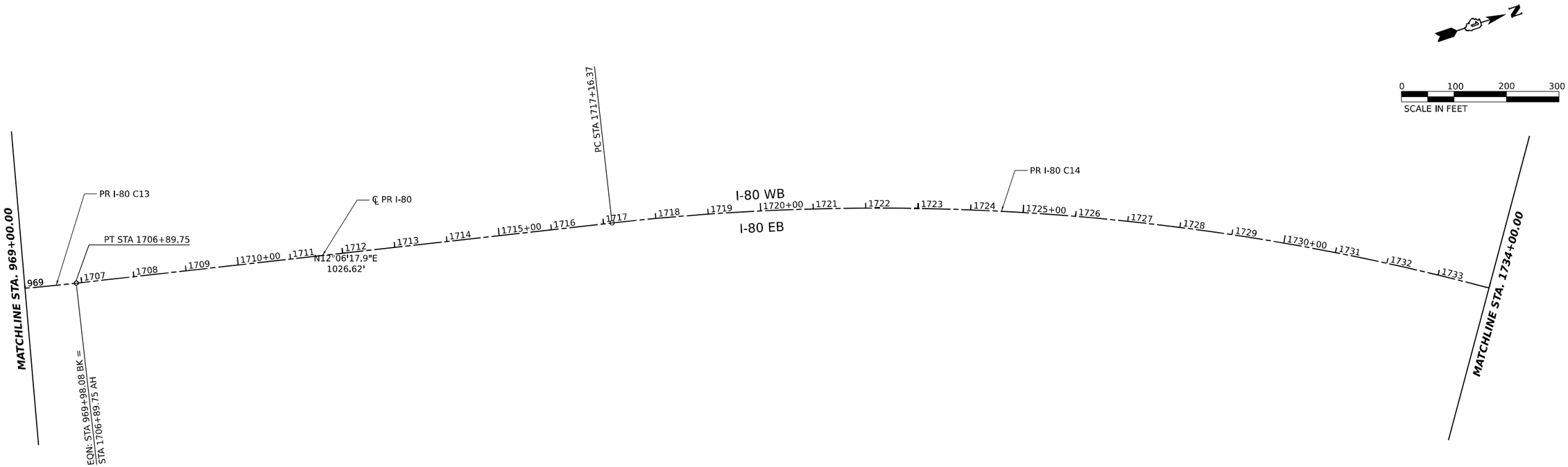

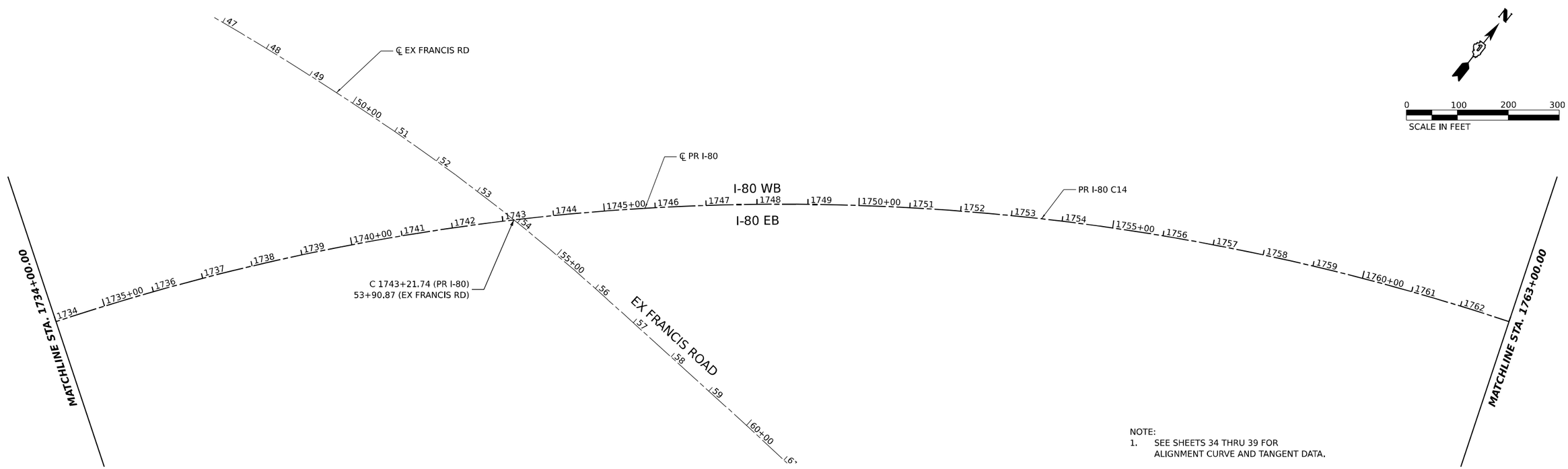

NOTE:
1. SEE SHEETS 34 THRU 39 FOR ALIGNMENT CURVE AND TANGENT DATA.

MODEL: PR I-80 - PR I80_ALIGN-31 [SHEET]
FILE NAME: C:\TRANSYSTEMS\PW_LOCAL\TRANSYSTEMS-PW-01\DMS31452\62R19-SHT-ATB-19.DGN

exp.	USER NAME = SALASL	DESIGNED - CMA	REVISED -	STATE OF ILLINOIS DEPARTMENT OF TRANSPORTATION	I–80 ALIGNMENT, TIES, AND BENCHMARKS
		DRAWN - CMA	REVISED -		
	PLOT SCALE = 0.16666667 ' / IN.	CHECKED - TMH	REVISED -		
	PLOT DATE = 11/12/2025	DATE - 11/12/2025	REVISED -		SCALE: 1"=100' SHEET OF SHEETS STA. TO STA.

F.A.I. RTE.	SECTION	COUNTY	TOTAL SHEETS	SHEET NO.
80	FAI 80 21 VLS	VARIOUS	467	30
		CONTRACT NO. 62R19		
		ILLINOIS	FED. AID PROJECT	

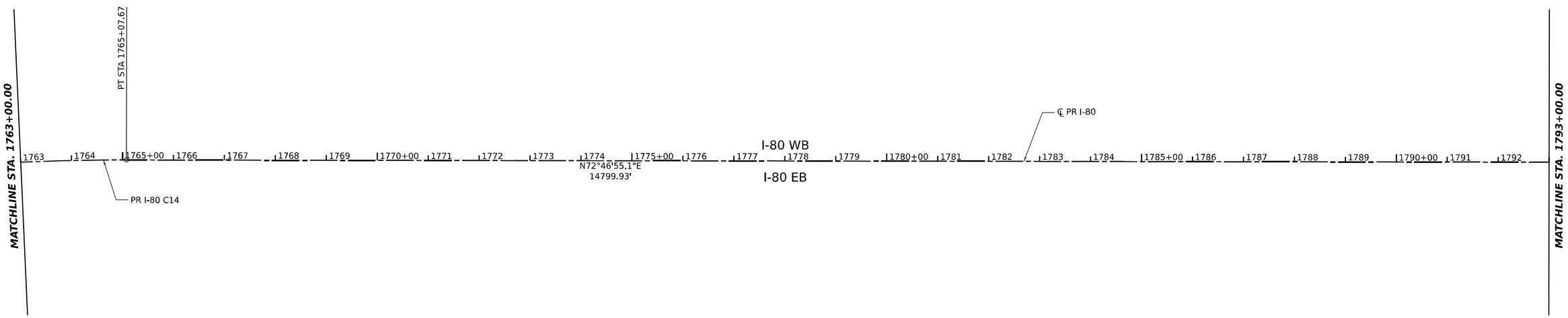

NOTE:
1. SEE SHEETS 34 THRU 39 FOR ALIGNMENT CURVE AND TANGENT DATA.

MODEL: PR I-80 - PR I80_ALIGN-33 (SHEET)
FILE NAME: C:\TRANSYSTEMS\PW_LOCAL\TRANSYSTEMS-PW-01\DMS31452\62R19-SHT-ATB-20.DGN

exp.	USER NAME = SALASL	DESIGNED - CMA	REVISED -	STATE OF ILLINOIS DEPARTMENT OF TRANSPORTATION	I–80 ALIGNMENT, TIES, AND BENCHMARKS			F.A.I. RTE.	SECTION	COUNTY	TOTAL SHEETS / SHEET NO.
		DRAWN - CMA	REVISED -					80	FAI 80 21 VLS	VARIOUS	467 / 31
	PLOT SCALE = 0.16666667 ' / IN.	CHECKED - TMH	REVISED -							CONTRACT NO. 62R19	
	PLOT DATE = 11/12/2025	DATE - 11/12/2025	REVISED -		SCALE: 1"=100'	SHEET OF SHEETS	STA. TO STA.		ILLINOIS	FED. AID PROJECT	

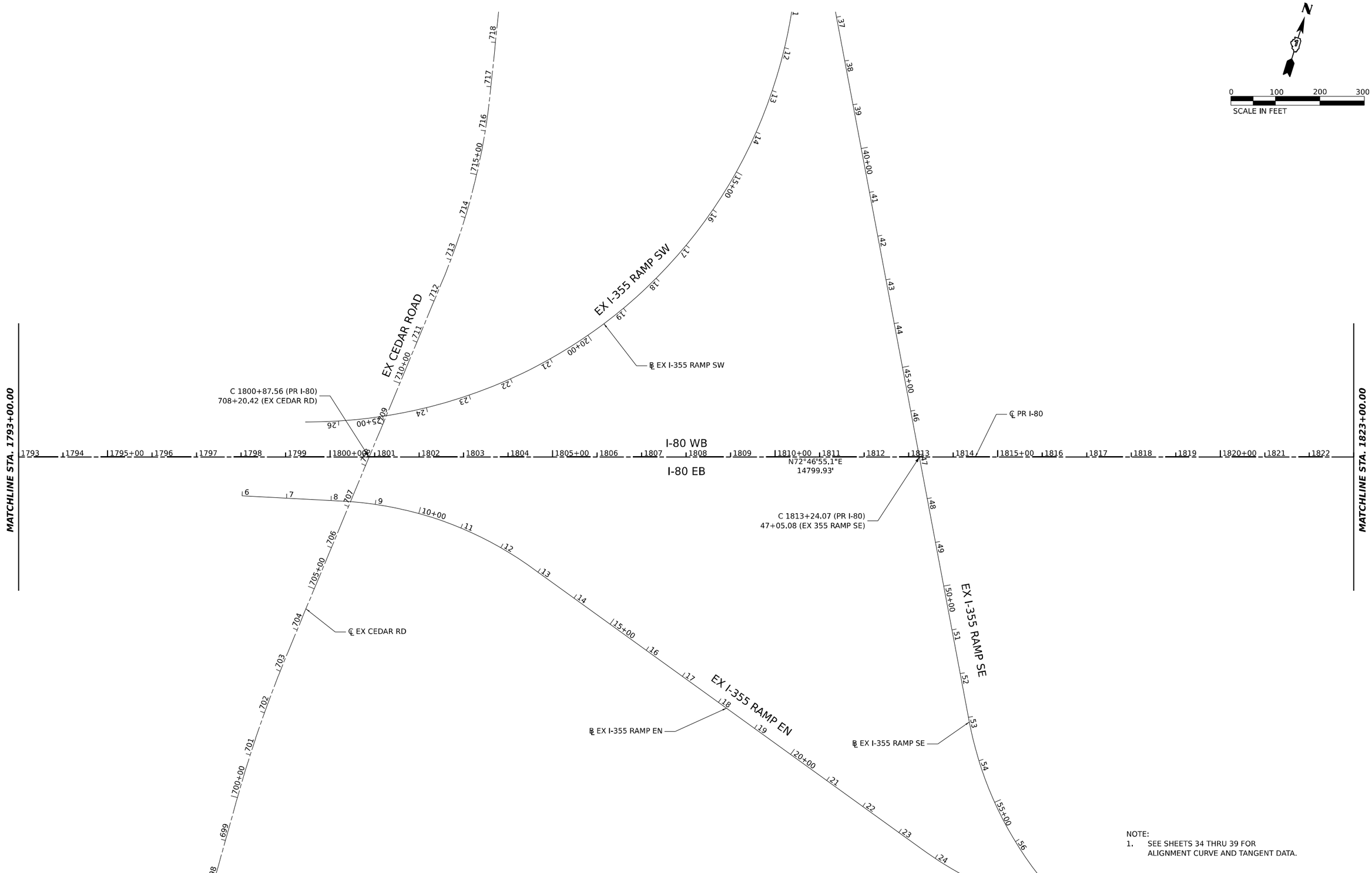

NOTE:
1. SEE SHEETS 34 THRU 39 FOR ALIGNMENT CURVE AND TANGENT DATA.

MODEL: PR I-80 - PR I80_ALIGN-34 [SHEET]
FILE NAME: C:\TRANSYSTEMS\PW_LOCAL\TRANSYSTEMS-PW-01\DMS31452\62R19-SHT-ATB-21.DGN

exp.

USER NAME = SALASL	DESIGNED - CMA	REVISED -	
	DRAWN - CMA	REVISED -	
PLOT SCALE = 0.16666667 ' / IN.	CHECKED - TMH	REVISED -	
PLOT DATE = 11/12/2025	DATE - 11/12/2025	REVISED -	

STATE OF ILLINOIS
DEPARTMENT OF TRANSPORTATION

I-80
ALIGNMENT, TIES, AND BENCHMARKS

SCALE: 1"=100' | SHEET OF SHEETS | STA. TO STA.

F.A.I. RTE.	SECTION	COUNTY	TOTAL SHEETS	SHEET NO.
80	FAI 80 21 VLS	VARIOUS	467	32
		CONTRACT NO. 62R19		
	ILLINOIS	FED. AID PROJECT		

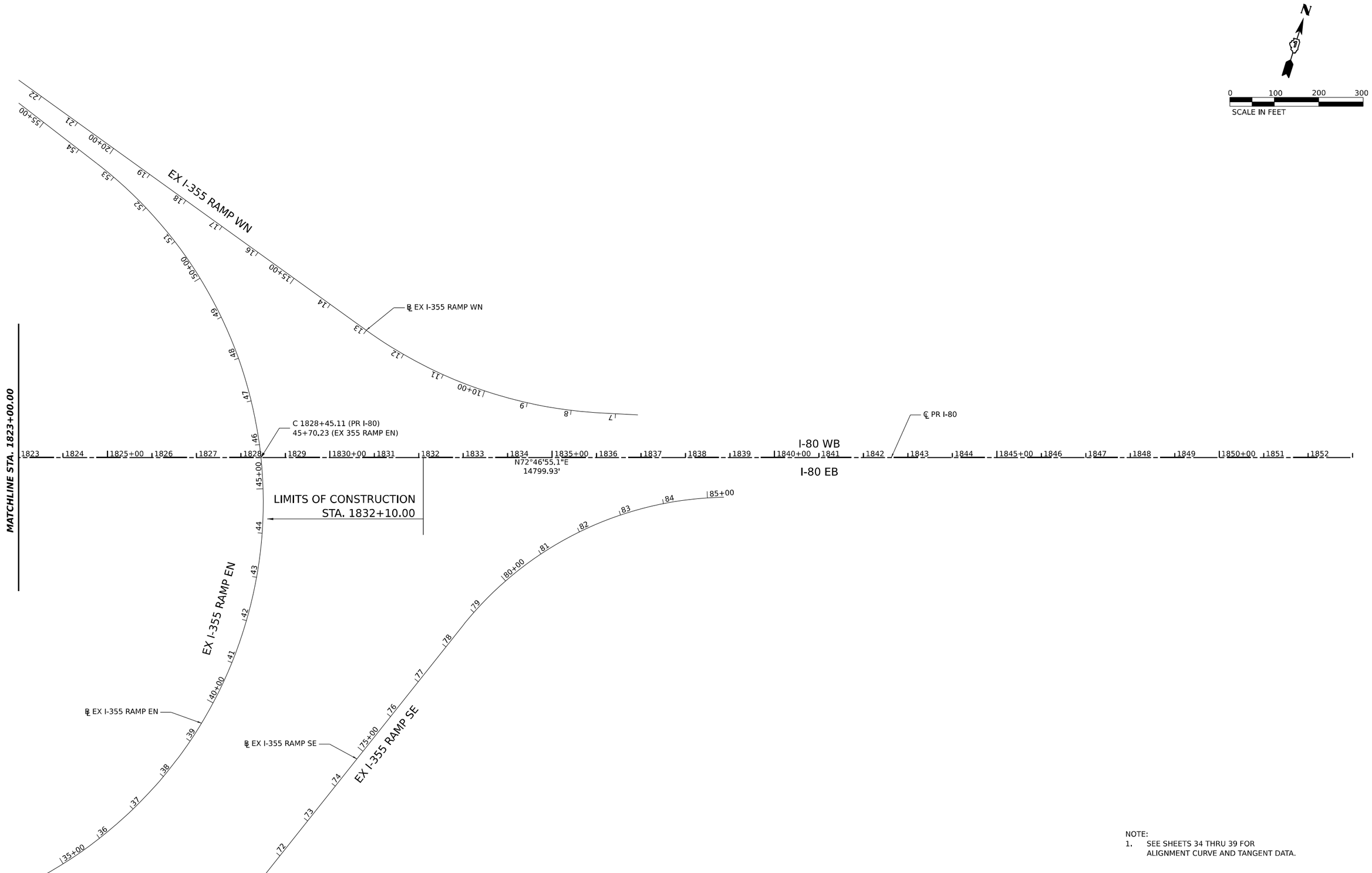

NOTE:
1. SEE SHEETS 34 THRU 39 FOR ALIGNMENT CURVE AND TANGENT DATA.

MODEL: PR I-80 - PR I80_ALIGN-35 [SHEET]
FILE NAME: C:\TRANSYSTEMS\PW_LOCAL\TRANSYSTEMS-PW-01\DMS31452\62R19-SHT-ATB-22.DGN

exp.

USER NAME = SALASL	DESIGNED - CMA	REVISED -	
	DRAWN - CMA	REVISED -	
PLOT SCALE = 0.16666667 ' / IN.	CHECKED - TMH	REVISED -	
PLOT DATE = 11/12/2025	DATE - 11/12/2025	REVISED -	

STATE OF ILLINOIS
DEPARTMENT OF TRANSPORTATION

I-80
ALIGNMENT, TIES, AND BENCHMARKS

SCALE: 1"=100' | SHEET OF SHEETS | STA. TO STA.

F.A.I. RTE.	SECTION	COUNTY	TOTAL SHEETS	SHEET NO.
80	FAI 80 21 VLS	VARIOUS	467	33

CONTRACT NO. 62R19

ILLINOIS | FED. AID PROJECT

EXISTING CURVE AND COORDINATE DATA

BASELINE	CURVE NAME	PC STA.	PI STA.	PT STA.	Delta	D	T	L	R	e	S.E. RUN	DESIGN SPEED	PC NORTH	PC EAST	PI NORTH	PI EAST	PT NORTH	PT EAST	CC NORTH	CC EAST
EX I-80	EX C1	162+06.27	196+47.82	196+62.08	51° 38' 49.2"	1° 30' 3.6"	1,847.61	3,441.55	3,817.98				1746805.9960	1005691.9870	1746867.7550	1007538.5600	1748354.1600	1008635.9420	1750621.8420	1005564.3650
EX I-80	EX C2	262+59.99	281+47.82	297+66.54	52° 36' 46.8"	1° 30' 0.0"	1,887.83	3,506.55	3,818.65				1753673.6710	1012563.2290	1755192.4390	1013684.5040	1755223.7170	1015572.0780	1751405.5890	1015635.3460
EX I-80	EX C3	332+92.38	336+21.76	339+50.75	4° 49' 4.8"	0° 43' 55.2"	329.38	658.37	7,830.00				1755282.1340	1019097.4380	1755287.5910	1019426.7700	1755320.6870	1019754.4810	1763111.0590	1018967.7100
EX I-80	EX C4	347+14.95	349+88.62	352+62.06	4° 0' 10.8"	0° 43' 55.2"	273.67	547.12	7,830.00				1755397.4750	1020514.8100	1755424.9740	1020787.0940	1755433.3950	1021060.6330	1747607.1030	1021301.5810
EX I-80	EX C5	398+19.02	422+56.88	444+28.66	46° 6' 50.4"	1° 0' 0"	2,437.86	4,609.64	5,727.40				1755573.6240	1025615.4360	1755648.6430	1028052.1430	1757456.8310	1029687.2650	1761298.3120	1025439.1900
EX I-80	EX C6	501+17.03	537+29.53	569+56.69	45° 35' 34.8"	0° 40' 1.2"	3,612.50	6,839.66	8,595.18				1761675.9550	1033502.5650	1764355.3860	1035925.5410	1764499.3500	1039535.1720	1755910.9980	1039877.7040
EX I-80	EX C10	731+71.69	736+02.18	740+31.06	8° 35' 27.6"	1° 0' 0.0"	430.49	859.37	5,731.06	3.30%	248.00	70	1765229.9900	1055523.3840	1765307.6790	1055946.8060	1765321.2420	1056377.0830	1759593.0270	1056557.6440
EX I-80	EX C11	755+21.19	760+22.70	765+21.64	10° 1' 30.0"	1° 0' 7.2"	501.50	1,000.44	5,717.80	3.30%	248.00	70	1765368.1900	1057866.4800	1765383.9900	1058367.7320	1765312.2920	1058864.0810	1759653.2280	1058046.6240
EX I-80	EX C12	768+98.59	774+00.10	778+99.04	10° 1' 04.8"	1° 0' 0.0"	501.50	1,000.45	5,721.97	3.30%	248.00	70	1765258.3990	1059237.1680	1765186.7010	1059733.5170	1765202.4380	1060234.7710	1770921.5900	1060055.2210
EX I-80	EX C13	920+65.97	950+55.59	971+39.18	76° 6' 07.0"	1° 30' 0.0"	2,989.62	5,073.21	3,819.53	3.70%	203.00	60	1765646.0500	1074394.7570	1765739.5980	1077382.9120	1768662.7420	1078009.8440	1769463.7100	1074275.2410
EX RICHARDS RAMP A	EX C1	108+00.94	108+71.61	109+41.95	9° 41' 56.4"	6° 52' 40.8"	70.67	141.01	833.00	6.00%	190	50	1765015.0030	1054934.6790	1765024.0310	1055004.7740	1765021.1220	1055075.3880	1764188.8280	1055041.0960
EX RICHARDS RAMP A	EX C2	109+41.95	110+09.28	110+75.48	18° 12' 54.0"	13° 38' 31.2"	67.33	133.53	420.00	6.00%	155	30	1765021.1220	1055075.3880	1765018.3500	1055142.6620	1764994.6880	1055205.6980	1764601.4780	1055058.0980
EX RICHARDS RAMP B	EX C1	14+96.31	16+82.59	18+59.01	32° 13' 8.4"	8° 52' 58.8"	186.28	362.70	645.00	6.00%	180	45	1765116.6960	1055977.0280	1765223.9950	1056129.3050	1765233.5860	1056315.3410	1764589.4410	1056348.5490
EX RICHARDS RAMP C	EX C1	107+66.69	109+42.22	111+16.75	10° 33' 21.6"	3° 0' 57.6"	175.53	350.06	1,900.00	4.60%	204	55	1765409.5490	1056277.8480	1765413.3830	1056102.3610	1765449.3030	1055930.5480	1767309.0950	1056319.3550
EX RICHARDS RAMP D	EX C1	05+12.92	05+99.95	06+86.96	2° 8' 38.4"	1° 13' 55.2"	87.03	174.03	4,650.00	6.00%	204	35	1765522.2330	1055445.7330	1765474.4350	1055373.0080	1765423.9500	1055302.1220	1761636.3780	1057999.6760
EX RICHARDS RAMP D	EX C2	09+50.51	10+53.23	11+52.96	23° 54' 57.6"	11° 48' 50.4"	102.72	202.45	485.00	6.00%	165	40	1765271.0540	1055087.4450	1765211.4650	1055003.7770	1765190.9110	1054903.1350	1765666.1020	1054806.0880

EXISTING TANGENT ALIGNMENT DATA

BASELINE	PT STA.	POT STA.	DESIGN SPEED	BEARING					DISTANCE	PT NORTH	PT EAST	POT NORTH	POT EAST
EX PR I-80	143+65.97	162+06.27	70	N	88°	5'	2.4"	E	1,840.30	1,746,744.48	1,003,852.72	1,746,806.00	1,005,691.99
EX PR I-80	196+47.82	262+59.99	70	N	36°	26'	16.8"	E	6,612.17	1,748,354.16	1,008,635.94	1,753,673.67	1,012,563.23
EX PR I-80	297+66.54	332+92.38	70	N	89°	3'	3.6"	E	3,525.84	1,755,223.72	1,015,572.08	1,755,282.13	1,019,097.44
EX PR I-80	339+50.75	347+14.95	70	N	84°	13'	58.8"	E	764.20	1,755,320.69	1,019,754.48	1,755,397.48	1,020,514.81
EX PR I-80	352+62.06	398+19.02	70	N	88°	14'	13.2"	E	4,556.96	1,755,433.40	1,021,060.63	1,755,573.62	1,025,615.44
EX PR I-80	444+28.66	501+17.03	70	N	42°	7'	22.8"	E	5,688.37	1,757,456.83	1,029,687.27	1,761,675.96	1,033,502.57
EX PR I-80	569+56.69	646+90.94	70	N	87°	42'	57.6"	E	7,734.25	1,764,499.35	1,039,535.17	1,764,807.57	1,047,263.28
EX PR I-80	653+22.76	656+24.66	70	N	68°	43'	33.6"	E	301.90	1,764,935.96	1,047,878.96	1,765,045.50	1,048,160.29
EX PR I-80	669+74.51	683+90.00	70	S	70°	43'	30"	E	1,415.50	1,765,068.57	1,049,481.94	1,764,601.32	1,050,818.09
EX PR I-80	693+01.53	731+71.69	70	N	79°	36'	10.8"	E	3,870.16	1,764,531.56	1,051,716.77	1,765,229.99	1,055,523.38
EX PR I-80	740+31.06	755+21.20	70	N	88°	11'	42"	E	1,490.14	1,765,321.24	1,056,377.08	1,765,368.19	1,057,866.48
EX PR I-80	765+21.64	768+98.60	70	S	81°	46'	48"	E	376.96	1,765,312.29	1,058,864.08	1,765,258.40	1,059,237.17
EX PR I-80	778+99.04	815+18.38	70	N	88°	12'	7.2"	E	3,619.34	1,765,202.44	1,060,234.77	1,765,316.01	1,063,852.33
EX PR I-80	815+18.38	920+65.97	70	N	88°	12'	25.20"	E	10,547.59	1,765,316.01	1,063,852.33	1,765,646.05	1,074,394.76
EX RICHARDS RAMP A	100+00.00	108+00.94	50	N	82°	39'	36.0"	E	800.94	1,764,912.68	1,054,140.30	1,765,015.00	1,054,934.68
EX RICHARDS RAMP A	110+75.48	114+46.81	35	S	69°	25'	30.0"	E	371.33	1,764,994.69	1,055,205.70	1,764,864.19	1,055,553.35
EX RICHARDS RAMP B	10+00.00	14+96.31	35	N	54°	49'	48.0"	E	496.31	1,764,830.82	1,055,571.32	1,765,116.70	1,055,977.03
EX RICHARDS RAMP B	18+59.01	30+17.58	55	N	87°	2'	56.4"	E	1,158.58	1,765,233.59	1,056,315.34	1,765,293.24	1,057,472.38
EX RICHARDS RAMP C	100+00.00	107+66.69	55	N	88°	44'	52.8"	W	766.69	1,765,392.80	1,057,044.36	1,765,409.55	1,056,277.85
EX RICHARDS RAMP C	111+16.75	115+13.98	35	N	78°	11'	31.2"	W	397.23	1,765,449.30	1,055,930.55	1,765,530.59	1,055,541.73
EX RICHARDS RAMP D	4+00.00	5+12.92	35	S	56°	41'	6.0"	W	112.92	1,765,584.26	1,055,540.10	1,765,522.23	1,055,445.73
EX RICHARDS RAMP D	6+86.96	9+50.51	35	S	54°	32'	27.6"	W	263.56	1,765,423.95	1,055,302.12	1,765,271.05	1,055,087.45
EX RICHARDS RAMP D	11+52.96	17+52.88	40	S	78°	27'	25.2"	W	599.92	1,765,190.91	1,054,903.14	1,765,070.87	1,054,315.35

MODEL: 2D SHEET H
FILE NAME: C:\TRANSYSTEMS\PW_LOCAL\TRANSYSTEMS-PW-01\DMS31452\62R19-SHT-ATB-31.DGN

exp.

USER NAME = SALASL	DESIGNED - CS	REVISED -	
	DRAWN - CS	REVISED -	
PLOT SCALE = 0.16666667 ' / IN.	CHECKED - TMH	REVISED -	
PLOT DATE = 11/12/2025	DATE - 11/12/2025	REVISED -	

STATE OF ILLINOIS
DEPARTMENT OF TRANSPORTATION

ALIGNMENT, TIES, AND BENCHMARKS
EXISTING TANGENT DATA

SCALE: 1"=100' | SHEET OF SHEETS | STA. TO STA.

F.A.I. RTE.	SECTION	COUNTY	TOTAL SHEETS	SHEET NO.
80	FAI 80 21 VLS	VARIOUS	467	35
		CONTRACT NO. 62R19		
	ILLINOIS	FED. AID PROJECT		

PROPOSED CURVE AND COORDINATE DATA

BASELINE	CURVE	PC STA.	PI STA.	PT STA.	DELTA			D			T	L	R	e	S.E. RUN	DESIGN SPEED	PC NORTH	PC EAST	PI NORTH	PI EAST	PT NORTH	PT EAST	CC NORTH	CC EAST
PR I-80	PR C1	161+94.06	180+55.69	196+62.08	51°	36'	39.6"	1°	29'	16.8"	1,861.63	3,468.02	3,850.00	4.60%	276.00	70	1746806.7220	1005679.7470	1746870.1040	1007540.2940	1748367.7890	1008646.0040	1750654.4900	1005548.6670
PR I-80	PR C2	262+41.81	281+45.14	297+77.15	52°	36'	46.8"	1°	29'	16.8"	1,903.33	3,535.34	3,850.00	4.60%	276.00	70	1753661.2030	1012554.0240	1755192.4390	1013684.5040	1755223.9740	1015587.5740	1751374.5020	1015651.3610
PR I-80	PR C3	332+87.50	336+16.87	339+45.86	4°	49'	04.8"	0°	43'	55.2"	329.38	658.37	7,830.00	2.60%	WB 156; EB 195	70	1755282.1340	1019097.4380	1755287.5910	1019426.7700	1755320.6870	1019754.4810	1763111.0590	1018967.7100
PR I-80	PR C4	347+10.06	349+83.73	352+57.18	4°	0'	10.8"	0°	43'	55.2"	273.67	547.12	7,830.00	2.60%	WB 156; EB 195	70	1755397.4750	1020514.8100	1755424.9740	1020787.0940	1755433.3950	1021060.6330	1747607.1030	1021301.5810
PR I-80	PR C5	398+04.52	422+52.00	444+32.35	46°	6'	50.4"	0°	59'	45.6"	2,447.48	4,627.83	5,750.00	3.40%	WB 255; EB 306	70	1755573.3280	1025605.8210	1755648.6430	1028052.1430	1757463.9660	1029693.7170	1761320.6050	1025428.8790
PR I-80	PR C6	501+09.07	537+23.60	569+52.57	45°	35'	34.8"	0°	39'	57.6"	3,614.53	6,843.50	8,600.00	2.40%	WB 144; EB 180	70	1761674.4520	1033501.2070	1764355.3860	1035925.5410	1764499.4310	1039537.1960	1755906.2620	1039879.9200
PR I-80	PR C10	730+30.58	734+61.07	738+89.94	8°	35'	27.6"	1°	0.0'	0.0"	430.49	859.36	5,731.00	3.30%	248.00	70	1765229.9910	1055523.3880	1765307.6790	1055946.8060	1765321.2420	1056377.0780	1759593.0870	1056557.6380
PR I-80	PR C11	753+80.07	758+81.59	763+80.54	10°	1'	30.0"	1°	0.0'	7.2"	501.52	1,000.48	5,718.00	3.30%	248.00	70	1765368.1890	1057866.4630	1765383.9900	1058367.7320	1765312.2890	1058864.0980	1759653.0280	1058046.6130
PR I-80	PR C12	767+57.48	772+58.80	777+57.56	10°	0'	50.4"	1°	0.0'	3.6"	501.31	1,000.07	5,722.00	3.30%	248.00	70	1765258.4000	1059237.1650	1765186.7280	1059733.3290	1765202.4260	1060234.3970	1770921.6200	1060055.2230
PR I-80	PR C13	919+24.96	949+14.51	969+98.08	76°	6'	03.0"	1°	30'	0.0"	2,989.55	5,073.12	3,819.51	3.70%	198.00	60	1765646.0530	1074394.8560	1765739.6660	1077382.9360	1768662.7420	1078009.8440	1769463.6940	1074275.2550
PR I-55 RAMP A	PR C1	10+00.00	12+37.78	14+75.42	3°	26'	52.8"	0°	43'	30"	237.78	475.42	7,900.00	2.60%	N/A	50	1755225.0800	1019288.4860	1755222.1680	1019526.2470	1755233.5600	1019763.7540	1763124.4880	1019385.2460
PR I-55 RAMP A	PR C2	18+04.58	22+34.46	25+98.28	54°	35'	31.2"	6°	52'	40.8"	429.87	793.70	833.00	6.00%	N/A	50	1755249.1220	1020092.5550	1755269.4440	1020521.9460	1754931.2430	1020787.2960	1754417.0530	1020131.9350
PR I-55 RAMP A	PR C3	33+65.00	36+45.45	39+06.77	36°	31'	8.4"	6°	44'	26.52"	280.44	541.77	850.00	6.00%	N/A	50	1754328.0265	1021260.5742	1754107.3875	1021433.6856	1753827.0520	1021441.5082	1753803.3427	1020591.8389
PR I-55 RAMP B	PR C1	1020+18.61	1028+92.65	1037+15.13	33°	59'	13.2"	2°	0'	10.8"	874.04	1,696.52	2,860.00	N/A	N/A	50	1754878.3180	1022275.9860	1755403.0650	1022974.9780	1755447.4230	1023847.8920	1752591.1090	1023993.0400
PR I-55 RAMP C	PR C1	20+58.77	22+29.31	23+95.38	22°	41'	24"	6°	44'	27.6"	170.54	336.61	850.00	N/A	N/A	50	1755605.1540	1023374.3930	1755611.8100	1023203.9820	1755683.6850	1023049.3280	1756454.5070	1023407.5650
PR I-55 RAMP D	PR C1	15+03.64	16+36.68	17+68.54	13°	11'	52.8"	4°	58'	55.2"	133.04	264.90	1,150.00	5.60%	N/A	50	1755822.9240	1020533.7490	1755729.4940	1020439.0410	1755660.1540	1020325.5030	1756641.6010	1019726.1180
PR I-55 RAMP D	PR C2	17+68.54	21+91.93	26+02.62	24°	15'	46.8"	2°	54'	32.4"	423.39	834.09	1,969.65	4.40%	N/A	50	1755660.1540	1020325.5030	1755439.4820	1019964.1680	1755386.7830	1019544.0700	1757341.1170	1019298.9130
PR I-55 RAMP D	PR C3	26+02.62	27+74.52	29+46.20	5°	3"	18"	1°	28'	15.6"	171.90	343.57	3,894.22	2.80%	N/A	50	1755386.7830	1019544.0700	1755365.3880	1019373.5090	1755359.1040	1019201.7260	1759250.7210	1019059.3670
PR I-55 RAMP BB	PR C1	14+54.82	15+18.83	15+82.11	15°	2'	16.8"	11°	48'	50.4"	64.01	127.29	485.00	6.00%	N/A	50	1755367.3900	1021946.2700	1755364.8920	1022010.2340	1755345.8840	1022071.3600	1754882.7600	1021927.3420
PR I-55 RAMP BB	PR C2	15+82.11	17+75.47	19+08.76	77°	1'	8.4"	23°	34'	44.4"	193.36	326.65	243.00	6.00%	N/A	50	1755345.8840	1022071.3600	1755288.4680	1022255.9940	1755095.6550	1022241.5210	1755113.8440	1021999.2020
PR I-55 RAMP BB	PR C3	19+08.76	20+94.10	22+51.76	53°	50'	31.2"	15°	41'	49.2"	185.34	343.00	365.00	6.00%	N/A	50	1755095.6550	1022241.5210	1754910.8310	1022227.6470	1754812.9840	1022070.2350	1755122.9760	1021877.5450
PR I-55 RAMP CC	PR C1	10+00.00	11+03.88	12+00.00	38°	11'	49.2"	19°	5'	56.4"	103.88	200.00	300.00	6.00%	N/A	50	1755794.9740	1022118.7870	1755694.1910	1022093.6260	1755630.5460	1022011.5310	1755867.6400	1021827.7210
PR I-55 RAMP CC	PR C2	12+00.00	13+01.20	14+00.00	21°	37'	15.6"	10°	48'	39.6"	101.20	200.00	530.00	9.58%	N/A	50	1755630.5460	1022011.5310	1755568.6070	1021931.4950	1755540.5170	1021834.2670	1756049.6920	1021687.1600
PR I-55 RAMP CC	PR C3	14+00.00	14+87.96	15+75.00	14°	19'	26.4"	8°	11'	6"	87.96	175.00	700.00	5.50%	N/A	50	1755540.5170	1021834.2670	1755516.1440	1021749.7530	1755513.4370	1021661.8360	1756213.1060	1021640.2960
PR I-55 RAMP DD	PR C1	06+95.81	07+84.57	08+72.60	12°	45'	25.2"	7°	12'	57.6"	88.76	176.79	794.00	N/A	N/A	50	1755500.1000	1021228.7640	1755497.3690	1021140.0450	1755514.2960	1021052.9130	1756293.7240	1021204.3310
PR I-55 RAMP DD	PR C2	08+72.60	09+53.26	10+32.77	16°	48'	28.8"	10°	29'	38.4"	80.66	160.17	546.00	6.00%	N/A	50	1755514.2960	1021052.9130	1755529.6790	1020973.7290	1755567.3020	1020902.3760	1756050.2760	1021157.0360
PR I-55 RAMP DD	PR C3	10+32.77	14+47.57	15+72.45	113°	19'	37.2"	20°	59'	56.4"	414.80	539.68	272.85	6.00%	N/A	50	1755567.3020	1020902.3760	1755760.7680	1020535.4590	1756021.0850	1020858.4020	1755808.6560	1021029.6360
PR I-55 RAMP DD	PR C4	15+72.45	19+58.88	21+42.69	99°	0'	28.8"	17°	21'	43.2"	386.43	570.24	330.00	6.00%	N/A	50	1756021.0850	1020858.4020	1756263.6010	1021159.2620	1755928.4810	1021351.6820	1755764.1620	1021065.5020
PR HOUBOLT RAMP A	PR C1	400+25.97	404+89.39	406+08.19	116°	38'	16.8"	20°	1'	58.8"	463.42	582.22	286.00	-4.20%	87.00	50	1757693.5000	1029544.1770	1757970.5520	1029172.6980	1757514.2860	1029091.6060	1757464.2390	1029373.1930
PR HOUBOLT RAMP A	PR C2	409+15.44	412+60.92	415+71.13	44°	37'	4.8"	6°	48'	18"	345.48	655.69	842.00	6.00%	PC 128; PT 78	50	1757211.7700	1029037.8400	1756871.6200	1028977.3850	1756671.9590	1028695.4400	1757359.1100	1028208.8310
PR HOUBOLT RAMP A	PR C3	415+71.13	417+83.40	419+95.58	2°	49'	40.8"	0°	39'	57.6"	212.27	424.45	8,600.00	3.40%	N/A	50	1756671.9590	1028695.4400	1756549.2850	1028522.2090	1756435.3060	1028343.1370	1763690.3600	1023725.3240
PR HOUBOLT RAMP A	PR C4	419+95.58	427+76.83	435+48.37	15°	38'	24"	1°	0'	25.2"	781.25	1,552.79	5,688.50	3.40%	N/A	50	1756435.3060	1028343.1370	1756035.0660	1027672.1970	1755830.5250	1026918.1970	1761320.6040	1025428.8800
PR HOUBOLT RAMP B	PR C1	305+75.39	307+18.99	308+59.91	19°	10'	40.8"	6°	44'	27.6"	143.60	284.52	850.00	6.00%	192.00	50	1758287.6610	1030301.5430	1758188.1280	1030198.0300	1758128.1230	1030067.5650	1758900.3620	1029712.3930
PR HOUBOLT RAMP C	PR C1	202+18.18	204+12.86	205+87.31	45°	0'	0"	12°	11'	27.6"	194.68	369.14	470.00	N/A	N/A	50	1757317.3390	1030094.1360	1757425.6720	1030255.8900	1757616.6520	1030293.6650	1757707.8480	1029832.5970
PR HOUBOLT RAMP C	PR C2	208+80.04	211+02.13	213+14.16	29°	47'	20.4"	6°	51'	43.2"	222.09	434.12	835.00	6.00%	PC 151; PT 128	50	1757903.8160	1030350.4640	1758121.6820	1030393.5560	1758289.3520	1030539.1910	1757741.7970	1031169.5940

MODEL: 2D SHEET H
FILE NAME: C:\TRANSYSTEMS\PW_LOCAL\TRANSYSTEMS-PW-01\D0M531453\62R19-SHT-ATB-40.DGN

exp.

USER NAME = SALASL	DESIGNED - CS	REVISED -	
	DRAWN - CS	REVISED -	
PLOT SCALE = 0.16666667 ' / IN.	CHECKED - TMH	REVISED -	
PLOT DATE = 11/12/2025	DATE - 11/12/2025	REVISED -	

STATE OF ILLINOIS
DEPARTMENT OF TRANSPORTATION

ALIGNMENT, TIES, AND BENCHMARKS
PROPOSED CURVE DATA

SCALE: 1"=100' | SHEET OF SHEETS | STA. TO STA.

F.A.I. RTE.	SECTION	COUNTY	TOTAL SHEETS	SHEET NO.
80	FAI 80 21 VLS	VARIOUS	467	36
		CONTRACT NO. 62R19		
	ILLINOIS	FED. AID PROJECT		

PROPOSED CURVE AND COORDINATE DATA

BASELINE	CURVE	PC STA.	PI STA.	PT STA.	DELTA			D			T	L	R	e	S.E. RUN	DESIGN SPEED	PC NORTH	PC EAST	PI NORTH	PI EAST	PT NORTH	PT EAST	CC NORTH	CC EAST
PR HOUBOLT RAMP D	PR C1	98+00.00	99+71.86	101+43.63	3°	23'	56.4"	0°	59'	20.4"	171.86	343.63	5,792.13	-3.40%	123.00	50	1756424.6550	1028537.5570	1756509.0460	1028687.2750	1756602.1650	1028831.7250	1761470.4210	1025693.4360
PR HOUBOLT RAMP D	PR C2	104+75.76	105+64.16	106+52.55	0°	43'	44.4"	0°	24'	43.2"	88.40	176.79	13,898.00	2.00%	NC	50	1756782.1200	1029110.8810	1756830.0160	1029185.1780	1756878.8530	1029258.8610	1768463.3190	1021580.6750
PR HOUBOLT RAMP D	PR C3	106+52.55	107+13.69	107+74.82	1°	40'	48"	1°	22'	26.4"	61.14	122.27	4,170.00	N/A	N/A	50	1756878.8530	1029258.8610	1756912.6300	1029309.8220	1756944.8980	1029361.7510	1753403.0130	1031562.6480
PR LARKIN RAMP A	PR C1	904+54.82	905+47.71	906+39.84	12°	41'	45.6"	6°	51'	43.2"	92.89	185.02	835.00	6.00%	128.00	50	1764441.5950	1040426.4240	1764438.8130	1040519.2720	1764415.6940	1040609.2390	1763606.9700	1040401.4190
PR LARKIN RAMP A	PR C2	906+39.84	908+05.32	909+58.79	37°	40'	48"	11°	48'	50.4"	165.48	318.95	485.00	6.00%	166.00	40	1764415.6940	1040609.2390	1764374.5080	1040769.5150	1764243.9430	1040871.1890	1763945.9560	1040488.5290
PR LARKIN RAMP A	PR C3	911+17.02	912+83.96	914+25.45	54°	22'	30"	17°	37'	44.4"	166.94	308.43	325.00	-5.80%	PC 106; PT 159	30	1764119.1020	1040968.4060	1763987.3890	1041070.9740	1763994.0420	1041237.7800	1764318.7840	1041224.8280
PR LARKIN RAMP B	PR C1	1107+21.88	1108+30.42	1109+28.85	42°	39'	21.6"	20°	36'	36"	108.54	206.97	278.00	5.90%	95.00	30	1763709.4970	1041549.3410	1763818.0050	1041546.5320	1763899.7090	1041617.9910	1763716.6920	1041827.2480
PR LARKIN RAMP B	PR C2	1113+92.81	1117+41.24	1120+52.83	45°	23'	49.2"	6°	52'	40.8"	348.43	660.01	833.00	6.00%	128.00	50	1764248.9480	1041923.4360	1764511.2190	1042152.8190	1764532.0620	1042500.6240	1763700.5540	1042550.4560
PR LARKIN RAMP C	PR C1	705+24.82	706+05.07	706+84.82	10°	58'	44.4"	6°	51'	43.2"	80.25	160.00	835.00	6.00%	128.00	50	1764718.7590	1042574.5810	1764721.1620	1042494.3720	1764738.7970	1042416.0880	1765553.3850	1042599.5870
PR LARKIN RAMP C	PR C2	706+84.82	707+55.10	708+24.82	12°	26'	9.6"	8°	52'	58.8"	70.28	140.00	645.00	6.00%	N/A	45	1764738.7970	1042416.0880	1764754.2410	1042347.5290	1764784.0860	1042283.9060	1765368.0290	1042557.8320
PR LARKIN RAMP C	PR C3	708+24.82	709+24.73	710+21.88	23°	16'	48"	11°	48'	50.4"	99.91	197.06	485.00	6.00%	166.00	40	1764784.0860	1042283.9060	1764826.5170	1042193.4550	1764901.2410	1042127.1370	1765223.1750	1042489.8820
PR LARKIN RAMP C	PR C4	712+28.52	713+97.16	715+43.51	50°	41'	42"	16°	5'	38.4"	168.64	314.99	356.00	-6.00%	174.00	35	1765055.7910	1041989.9750	1765181.9220	1041878.0340	1765175.2020	1041709.5260	1764819.4850	1041723.7130
PR LARKIN RAMP D	PR C1	804+73.57	805+89.85	806+93.99	45°	6'	14.4"	20°	27'	46.8"	116.28	220.42	280.00	6.03%	98.00	30	1765479.4160	1041422.4430	1765363.1790	1041425.5470	1765278.9380	1041345.3960	1765471.9420	1041142.5430
PR LARKIN RAMP D	PR C2	812+65.88	815+93.97	818+90.97	42°	59'	42"	6°	52'	40.8"	328.09	625.09	833.00	6.00%	192.00	50	1764864.6190	1040951.1920	1764626.9260	1040725.0390	1764607.2990	1040397.5380	1765438.8070	1040347.7040
PR LARKIN RAMP AA	PR C1	950+00.00	950+42.75	950+85.48	2°	26'	31.2"	2°	51'	25.2"	42.75	85.48	2,005.54	N/A	N/A	25	1764448.5650	1041447.8100	1764405.8940	1041450.3690	1764363.1520	1041451.1070	1764328.5070	1039445.8720
PR LARKIN RAMP AA	PR C2	950+85.48	951+49.62	952+12.96	15°	38'	42"	12°	16'	22.8"	64.14	127.48	466.84	N/A	N/A	25	1764363.1520	1041451.1070	1764299.0240	1041452.2150	1764236.9730	1041435.9880	1764355.0880	1040984.3360
PR LARKIN RAMP AA	PR C3	952+12.96	954+66.64	955+96.67	95°	37'	51.6"	24°	55'	22.8"	253.68	383.71	229.89	N/A	N/A	25	1764236.9730	1041435.9880	1763991.5520	1041371.8060	1764079.5040	1041133.8670	1764295.1380	1041213.5740
PR LARKIN RAMP AA	PR C4	955+96.67	956+15.73	956+34.76	5°	46'	58.8"	15°	10'	58.8"	19.06	38.09	377.37	N/A	N/A	25	1764079.5040	1041133.8670	1764086.2890	1041116.0540	1764094.8330	1041099.0160	1764432.1630	1041268.1790
PR LARKIN RAMP AA	PR C5	956+34.76	956+69.62	957+03.66	21°	33'	10.8"	31°	16'	51.6"	34.86	68.90	183.17	N/A	N/A	25	1764094.8330	1041099.0160	1764111.5740	1041068.4360	1764138.3790	1041046.1450	1764255.4970	1041186.9750
PR LARKIN RAMP AA	PR C6	957+03.66	958+70.36	959+75.02	84°	2'	31.2"	30°	58'	15.6"	166.70	271.36	185.00	6.00%	10.00	25	1764138.3790	1041046.1450	1764266.5480	1040939.5570	1764385.8640	1041055.9710	1764256.6690	1041188.3860
PR LARKIN RAMP AA	PR C7	959+75.02	960+76.88	961+72.95	33°	21'	18"	16°	51'	7.2"	101.86	197.93	340.00	6.00%	N/A	35	1764385.8640	1041055.9710	1764458.7710	1041127.1050	1764480.5570	1041226.6080	1764148.4250	1041299.3280
PR LARKIN RAMP AA	PR C8	961+72.95	962+38.09	963+02.95	8°	55'	12"	6°	51'	43.2"	65.13	130.00	835.00	6.00%	128.00	50	1764480.5570	1041226.6080	1764494.4880	1041290.2320	1764498.3840	1041355.2470	1763664.8800	1041405.2000
PR LARKIN RAMP CC	PR C1	750+00.00	750+26.54	750+53.08	0°	32'	6"	1°	0'	25.2"	26.54	53.08	5,689.44	N/A	N/A	30	1764704.5790	1041518.8220	1764731.1070	1041517.9960	1764757.6410	1041517.4180	1764881.5960	1047205.5060
PR LARKIN RAMP CC	PR C2	750+53.08	750+74.29	750+95.49	0°	22'	15.6"	0°	52'	30"	21.21	42.41	6,544.85	N/A	N/A	30	1764757.6410	1041517.4180	1764778.8420	1041516.9560	1764800.0400	1041516.3570	1764615.0490	1034974.1260
PR LARKIN RAMP CC	PR C3	750+95.49	751+78.75	752+59.03	26°	29'	24"	16°	11'	52.8"	83.26	163.54	353.72	N/A	N/A	30	1764800.0400	1041516.3570	1764883.2660	1041514.0030	1764958.8030	1041549.0190	1764810.0380	1041869.9400
PR LARKIN RAMP CC	PR C4	752+59.03	753+32.84	754+01.48	37°	0'	57.6"	25°	59'	13.2"	73.81	142.44	220.48	N/A	N/A	30	1764958.8030	1041549.0190	1765025.7640	1041580.0590	1765060.5430	1041645.1570	1764866.0760	1041749.0520
PR LARKIN RAMP CC	PR C5	754+01.48	755+57.35	756+75.42	68°	17'	24"	24°	55'	40.8"	155.88	273.95	229.84	N/A	N/A	30	1765060.5430	1041645.1570	1765133.9960	1041782.6430	1765033.4330	1041901.7440	1764857.8190	1041753.4640
PR LARKIN RAMP CC	PR C6	756+75.42	757+20.87	757+64.40	28°	47'	49.2"	32°	21'	43.2"	45.45	88.99	177.05	N/A	N/A	30	1765033.4330	1041901.7440	1765004.1100	1041936.4730	1764961.6830	1041952.7820	1764898.1570	1041787.5230
PR LARKIN RAMP CC	PR C7	757+64.40	758+21.77	758+75.34	35°	58'	51.6"	32°	25'	55.2"	57.37	110.94	176.66	N/A	N/A	30	1764961.6830	1041952.7820	1764908.2870	1041973.7580	1764852.7550	1041959.3610	1764897.0890	1041788.3520
PR LARKIN RAMP CC	PR C8	758+75.34	760+06.48	761+14.56	58°	19'	22.8"	24°	22'	51.6"	131.13	239.22	235.00	6.00%	11.00	30	1764852.7550	1041959.3610	1764725.5830	1041927.3850	1764686.0140	1041802.3660	1764910.0610	1041731.4550
PR LARKIN RAMP CC	PR C9	761+14.56	761+94.51	762+73.66	14°	7'	58.8"	8°	52'	58.8"	79.96	159.10	645.00	6.00%	118.00	45	1764686.0140	1041802.3660	1764661.8880	1041726.1370	1764657.1050	1041646.3250	1765300.9500	1041607.7390
PR BRIGGS ST	PR C1	43+92.39	44+63.98	45+35.50	4°	5'	59.0"	2°	51'	53.00"	71.58	143.11	2,000.00	NC	N/A	35	1763697.6620	1063870.9190	1763769.2190	1063868.9920	1763840.7310	1063872.1860	1763751.4950	1065870.1950
PR BRIGGS ST	PR C2	46+58.50	47+28.75	47+98.95	4°	1'	25.0"	2°	51'	53.00"	70.26	140.45	2,000.00	NC	N/A	35	1763963.6050	1063877.6740	1764033.7900	1063880.8090	1764104.0230	1063879.0110	1764052.8410	1061879.6660
PR BRIGGS ST	PR C3	69+46.65	70+03.21	70+59.74	3°	14'	23.0"	2°	51'	53.00"	56.56	113.09	2,000.00	NC	N/A	35	1766251.0200	1063824.0490	1766307.5610	1063822.6020	1766363.9310	1063817.9610	1766199.8380	1061824.7040
PR BRIGGS ST	PR C4	71+38.32	71+84.68	72+31.03	2°	39'	21.0"	2°	51'	53.00"	46.36	92.71	2,000.00	NC	N/A	35	1766442.2460	1063811.5140	1766488.4520	1063807.7100	1766534.7840	1063806.0510	1766606.3400	1065804.7710
PR BRIGGS RAMP A	PR C1	104+70.99	106+63.77	108+49.91	26°	0'	00.0"	6°	51'	42.00"	192.78	387.91	835.00	6.00%	190.00	50	1765189.9690	1062850.0330	1765182.5500	1063042.6650	1765091.4370	1063212.5500	1764355.5880	1062817.8980
PR BRIGGS RAMP B	PR C1	207+95.10	210+09.92	212+15.61	28°	51'	15.0"	6°	51'	42.00"	214.81	420.51	835.00	6.00%	190.00	50	1765152.0630	1064542.7000	1765265.2420	1064725.2790	1765276.2600	1064939.8090	1764442.3590	1064982.6380

MODEL: 2D SHEET H
FILE NAME: C:\TRANSYSTEMS\PW_LOCAL\TRANSYSTEMS-PW-01\DMS31452\62R19-SHT-ATB-41.DGN

exp.

USER NAME = SALASL	DESIGNED - CS	REVISED -	
	DRAWN - CS	REVISED -	
PLOT SCALE = 0.16666667 ' / IN.	CHECKED - TMH	REVISED -	
PLOT DATE = 11/12/2025	DATE - 11/12/2025	REVISED -	

STATE OF ILLINOIS
DEPARTMENT OF TRANSPORTATION

ALIGNMENT, TIES, AND BENCHMARKS
PROPOSED CURVE DATA

SCALE: 1"=100' | SHEET OF SHEETS | STA. TO STA.

F.A.I. RTE.	SECTION	COUNTY	TOTAL SHEETS	SHEET NO.
80	FAI 80 21 VLS	VARIOUS	467	37
		CONTRACT NO. 62R19		
	ILLINOIS	FED. AID PROJECT		

PROPOSED CURVE AND COORDINATE DATA

BASELINE	CURVE	PC STA.	PI STA.	PT STA.	DELTA			D			T	L	R	e	S.E. RUN	DESIGN SPEED	PC NORTH	PC EAST	PI NORTH	PI EAST	PT NORTH	PT EAST	CC NORTH	CC EAST
PR BRIGGS RAMP C	PR C1	304+79.69	306+72.90	308+59.41	26°	3'	20.0"	6°	51'	42.00"	193.201	379.721	835.00	6.00%	190.00	50	1765441.8180	1064843.0830	1765449.2530	1064650.0250	1765540.7330	1064479.8530	1766276.1990	1064875.2190
PR BRIGGS RAMP C	PR C2	308+59.41	309+81.76	310+99.11	28°	19'	01.2"	11°	48'	50.4"	122.35	239.699	485.00	6.00%	165.00	40	1765540.7330	1064479.8530	1765598.6640	1064372.0880	1765700.7820	1064304.6980	1765967.9200	1064709.4970
PR BRIGGS RAMP C	PR C3	313+37.80	314+44.27	315+40.64	43°	02'	42.0"	21°	13'	15.6"	106.477	202.8425	270.00	6.00%	165.00	30	1765899.9970	1064173.2300	1765988.8670	1064114.5830	1766013.7840	1064011.0620	1765751.2810	1063947.8780
PR BRIGGS RAMP D	PR C1	401+53.43	403+00.48	404+35.25	40°	22'	04.8"	14°	19'	26.4"	147.045	281.8234	400.00	6.00%	155.00	35	1766002.4610	1063686.1630	1765960.7800	1063545.1490	1765837.6890	1063464.7060	1765618.8660	1063799.5440
PR BRIGGS RAMP D	PR C2	406+60.25	409+87.13	412+65.08	53°	53'	38.4"	8°	54'	39.6"	326.879	604.8289	643.00	6.00%	180.00	45	1765649.3430	1063341.6190	1765375.7140	1063162.7970	1765358.9470	1062836.3480	1766001.1010	1062803.3660

MODEL: 2D SHEET H
FILE NAME: C:\TRANSYSTEMS\PW_LOCAL\TRANSYSTEMS-PW-01\DMS31452\62R19-SHT-ATB-42.DGN

exp.

USER NAME = SALASL	DESIGNED - CS	REVISED -	
	DRAWN - CS	REVISED -	
PLOT SCALE = 0.16666667 ' / IN.	CHECKED - TMH	REVISED -	
PLOT DATE = 11/12/2025	DATE - 11/12/2025	REVISED -	

STATE OF ILLINOIS
DEPARTMENT OF TRANSPORTATION

ALIGNMENT, TIES, AND BENCHMARKS
PROPOSED CURVE DATA

SCALE: 1"=100' | SHEET OF SHEETS | STA. TO STA.

F.A.I. RTE.	SECTION	COUNTY	TOTAL SHEETS	SHEET NO.
80	FAI 80 21 VLS	VARIOUS	467	38
		CONTRACT NO. 62R19		
	ILLINOIS	FED. AID PROJECT		

PROPOSED TANGENT ALIGNMENT DATA

BASELINE	PT STA.	POT STA.	DESIGN SPEED	BEARING					DISTANCE	PT NORTH	PT EAST	POT NORTH	POT EAST
PR I-80	100+00.00	161+94.06	70	N	88°	2'	56.4"	E	6,194.06	1,746,595.83	999,489.28	1,746,806.72	1,005,679.75
PR I-80	196+62.08	262+41.81	70	N	36°	26'	16.8"	E	6,579.73	1,748,367.79	1,008,646.00	1,753,661.20	1,012,554.02
PR I-80	297+77.15	332+87.50	70	N	89°	3'	3.6"	E	3,510.35	1,755,223.97	1,015,587.57	1,755,282.13	1,019,097.44
PR I-80	339+45.86	347+10.06	70	N	84°	13'	58.8"	E	764.20	1,755,320.69	1,019,754.48	1,755,397.48	1,020,514.81
PR I-80	352+57.18	398+04.52	70	N	88°	14'	13.2"	E	4,547.34	1,755,433.40	1,021,060.63	1,755,573.33	1,025,605.82
PR I-80	444+32.35	501+09.07	70	N	42°	7'	22.8"	E	5,676.72	1,757,463.97	1,029,693.72	1,761,674.45	1,033,501.21
PR I-80	569+52.57	10+00.00	70	N	87°	42'	57.6"	E	7,485.90	1,764,499.43	1,039,537.20	1,764,797.76	1,047,017.15
PR I-80	16+79.15	23+29.13	70	N	70°	47'	52.8"	E	649.98	1,764,923.90	1,047,681.98	1,765,137.68	1,048,295.79
PR I-80	35+66.67	58+05.02	70	S	78°	22'	26.4"	E	2,238.36	1,765,218.46	1,049,515.78	1,764,767.38	1,051,708.21
PR I-80	703+94.49	730+30.58	70	N	79°	36'	10.8"	E	2,636.09	1,764,754.27	1,052,930.58	1,765,229.99	1,055,523.39
PR I-80	738+89.94	753+80.07	70	N	88°	11'	42"	E	1,490.13	1,765,321.24	1,056,377.08	1,765,368.19	1,057,866.46
PR I-80	763+80.54	767+57.48	70	S	81°	46'	48"	W	376.94	1,765,312.29	1,058,864.10	1,765,258.40	1,059,237.17
PR I-80	777+57.56	919+24.96	70	N	88°	12'	21.6"	E	14,167.40	1,765,202.43	1,060,234.40	1,765,646.05	1,074,394.86
PR I-55 RAMP A	14+75.42	18+04.58	50	N	87°	17'	24"	E	329.17	1,755,233.56	1,019,763.75	1,755,249.12	1,020,092.56
PR I-55 RAMP A	25+98.28	33+65.00	50	S	38°	7'	1.2"	E	766.72	1,754,931.24	1,020,787.30	1,754,328.03	1,021,260.57
PR I-55 RAMP A	39+06.77	43+93.32	50	S	1°	35'	54.24"	E	486.55	1,753,827.05	1,021,441.51	1,753,340.69	1,021,455.08
PR I-55 RAMP B	1016+23.29	1020+18.61	50	N	53°	6'	14.4"	E	395.32	1,754,640.98	1,021,959.84	1,754,878.32	1,022,275.99
PR I-55 RAMP B	1037+15.13	1042+27.74	50	N	87°	5'	27.6"	E	512.61	1,755,447.42	1,023,847.89	1,755,473.44	1,024,359.84
PR I-55 RAMP C	15+00.00	20+58.77	50	N	87°	45'	46.8"	E	558.77	1,755,583.35	1,023,932.74	1,755,605.15	1,023,374.39
PR I-55 RAMP C	23+95.38	32+24.89	50	N	65°	22'	33.6"	W	1,116.50	1,755,683.69	1,023,049.33	1,756,148.88	1,022,034.36
PR I-55 RAMP D	7+00.00	15+03.64	50	S	45°	23'	20.4"	W	803.64	1,756,387.31	1,021,105.86	1,755,822.92	1,020,533.75
PR I-55 RAMP D	29+46.20	36+31.23	50	S	87°	54'	18"	W	685.04	1,755,359.10	1,019,201.73	1,755,334.06	1,018,517.15
PR I-55 RAMP BB	10+00.00	14+54.82	50	S	87°	45'	46.8"	E	454.82	1,755,385.14	1,021,491.80	1,755,367.39	1,021,946.27
PR I-55 RAMP CC	15+75.00	18+12.47	50	S	88°	14'	9.6"	W	237.47	1,755,513.44	1,021,661.84	1,755,506.13	1,021,424.48
PR I-55 RAMP DD	5+00.00	6+95.81	50	S	88°	14'	13.2"	W	195.81	1,755,506.13	1,021,424.48	1,755,500.10	1,021,228.76
PR HOUBOLT RAMP A	406+08.19	409+15.44	50	S	10°	4'	40.8"	W	307.26	1,757,514.29	1,029,091.61	1,757,211.77	1,029,037.84
PR HOUBOLT RAMP A	435+48.37	435+48.38	50	S	74°	49'	19.2"	W	0.01	1,755,830.53	1,026,918.20	1,755,830.52	1,026,918.19
PR HOUBOLT RAMP B	300+00.00	305+75.39	50	S	46°	7'	22.8"	W	575.39	1,758,686.48	1,030,716.30	1,758,287.66	1,030,301.54
PR HOUBOLT RAMP B	308+59.91	314+75.26	50	S	65°	18'	3.6"	W	615.35	1,758,128.12	1,030,067.57	1,757,871.00	1,029,508.51
PR HOUBOLT RAMP C	200+05.89	202+18.18	50	N	56°	11'	16.8"	E	212.29	1,757,199.21	1,029,917.75	1,757,317.34	1,030,094.14
PR HOUBOLT RAMP C	205+87.31	208+80.04	50	N	11°	11'	16.8"	E	292.73	1,757,616.65	1,030,293.67	1,757,903.82	1,030,350.46
PR HOUBOLT RAMP C	213+14.16	219+14.40	50	N	40°	58'	37.2"	E	600.24	1,758,289.35	1,030,539.19	1,758,742.52	1,030,932.80
PR HOUBOLT RAMP D	101+43.63	104+75.76	50	N	57°	11'	31.2"	E	332.13	1,756,602.17	1,028,831.73	1,756,782.12	1,029,110.88
PR HOUBOLT RAMP D	107+74.82	113+78.36	50	N	58°	8'	38.4"	E	603.54	1,756,944.90	1,029,361.75	1,757,263.44	1,029,874.38
PR LARKIN RAMP A	900+00.00	904+54.82	50	S	88°	17'	2.4"	E	454.82	1,764,455.22	1,039,971.81	1,764,441.60	1,040,426.42
PR LARKIN RAMP A	909+58.79	911+17.02	40	S	37°	54'	32.4"	E	158.23	1,764,243.94	1,040,871.19	1,764,119.10	1,040,968.41
PR LARKIN RAMP A	914+25.45	916+87.33	30	N	87°	42'	57.6"	E	261.88	1,763,994.04	1,041,237.78	1,764,004.48	1,041,499.45

PROPOSED TANGENT ALIGNMENT DATA

BASELINE	PT STA.	POT STA.	DESIGN SPEED	BEARING					DISTANCE	PT NORTH	PT EAST	POT NORTH	POT EAST
PR LARKIN RAMP B	1102+50.36	1107+21.88	30	N	1°	28'	58.8"	W	471.52	1,763,238.14	1,041,561.54	1,763,709.50	1,041,549.34
PR LARKIN RAMP B	1109+28.85	1113+92.81	40	N	41°	10'	22.8"	E	463.97	1,763,899.71	1,041,617.99	1,764,248.95	1,041,923.44
PR LARKIN RAMP B	1120+52.83	1132+02.71	50	N	86°	34'	12"	E	1,149.88	1,764,532.06	1,042,500.62	1,764,600.85	1,043,648.44
PR LARKIN RAMP C	700+00.00	705+24.82	50	N	88°	17'	2.4"	W	524.82	1,764,703.04	1,043,099.17	1,764,718.76	1,042,574.58
PR LARKIN RAMP C	710+21.88	712+28.52	40	N	41°	35'	20.4"	W	206.64	1,764,901.24	1,042,127.14	1,765,055.79	1,041,989.98
PR LARKIN RAMP C	715+43.51	717+83.27	35	S	87°	42'	57.6"	W	239.77	1,765,175.20	1,041,709.53	1,765,165.65	1,041,469.95
PR LARKIN RAMP D	802+97.69	804+73.57	30	S	1°	31'	48"	E	175.88	1,765,655.23	1,041,417.75	1,765,479.42	1,041,422.44
PR LARKIN RAMP D	806+93.99	812+65.88	40	S	43°	34'	30"	W	571.89	1,765,278.94	1,041,345.40	1,764,864.62	1,040,951.19
PR LARKIN RAMP D	818+90.97	824+90.93	50	S	86°	34'	12"	W	599.96	1,764,607.30	1,040,397.54	1,764,571.41	1,039,798.65
PR LARKIN RAMP AA	963+02.95	969+02.95	50	N	86°	34'	12"	E	600.00	1,764,498.38	1,041,355.25	1,764,534.28	1,041,954.17
PR LARKIN RAMP CC	762+73.66	764+73.66	45	S	86°	34'	12"	W	200.00	1,764,657.11	1,041,646.33	1,764,645.14	1,041,446.68
PR BRIGGS ST	36+00.00	43+92.39	35	N	1°	32'	31.2"	W	792.39	1,762,905.56	1,063,892.25	1,763,697.66	1,063,870.92
PR BRIGGS ST	45+35.50	46+58.50	35	N	2°	33'	25.20"	E	123.00	1,763,840.73	1,063,872.19	1,763,963.61	1,063,877.67
PR BRIGGS ST	47+98.95	69+46.65	35	N	1°	27'	57.60"	W	2,147.70	1,764,104.02	1,063,879.01	1,766,251.02	1,063,824.05
PR BRIGGS ST	70+59.74	71+38.32	35	N	4°	42'	21.60"	W	78.58	1,766,363.93	1,063,817.96	1,766,442.25	1,063,811.51
PR BRIGGS ST	72+31.03	80+00.00	35	N	2°	3'	0.00"	W	768.97	1,766,534.78	1,063,806.05	1,767,303.27	1,063,778.54
BRIGGS RAMP A	100+00.00	104+70.99	50	S	87°	47'	38.40"	E	470.99	1,765,208.10	1,062,379.39	1,765,189.97	1,062,850.03
BRIGGS RAMP A	108+49.91	115+92.22	50	S	61°	47'	38.40	E	742.31	1,765,091.44	1,063,212.55	1,764,740.59	1,063,866.72
BRIGGS RAMP B	200+00.00	207+95.10	50	N	58°	12'	21.60"	E	795.10	1,764,733.15	1,063,866.91	1,765,152.06	1,064,542.70
BRIGGS RAMP B	212+15.61	218+17.91	50	N	87°	3'	36.00"	E	602.31	1,765,276.26	1,064,939.81	1,765,307.15	1,065,541.32
BRIGGS RAMP B	218+17.91	228+17.91	50	N	88°	12'	21.60"	E	1,000.00	1,765,307.15	1,065,541.32	1,765,338.47	1,066,540.83
BRIGGS RAMP B	228+17.91	233+67.91	50	N	87°	3'	36.00"	E	550.00	1,765,338.47	1,066,540.83	1,765,366.68	1,067,090.11
BRIGGS RAMP C	300+00.00	304+79.69	50	N	87°	47'	38.40"	W	479.69	1,765,423.36	1,065,322.42	1,765,441.82	1,064,843.08
BRIGGS RAMP C	310+99.11	313+37.80	40	N	33°	25'	19.20"	W	238.68	1,765,700.78	1,064,304.70	1,765,900.00	1,064,173.23
BRIGGS RAMP C	315+40.64	317+23.76	30	N	76°	27'	57.6"	W	183.12	1,766,013.78	1,064,011.06	1,766,056.64	1,063,833.03
BRIGGS RAMP D	400+00.00	401+53.43	35	S	73°	32'	2.4"	W	153.43	1,766,045.95	1,063,833.30	1,766,002.46	1,063,686.16
BRIGGS RAMP D	404+35.25	406+60.25	35	S	33°	9'	54.0"	W	225.00	1,765,837.69	1,063,464.71	1,765,649.34	1,063,341.62
BRIGGS RAMP D	412+65.08	419+38.65	45	S	87°	3'	36.00"	W	673.57	1,765,358.95	1,062,836.35	1,765,324.40	1,062,163.66
BRIGGS RAMP D	419+38.65	429+38.65	50	S	88°	12'	21.60"	W	1,000.00	1,765,324.40	1,062,163.66	1,765,293.08	1,061,164.15
BRIGGS RAMP D	429+38.65	434+88.76	50	S	87°	3'	36.00"	W	550.11	1,765,293.08	1,061,164.15	1,765,264.87	1,060,614.77

EROSION AND SEDIMENT CONTROL GENERAL NOTES

1. THE LIMITS OF CONSTRUCTION WILL BE STAKED BY THE CONTRACTOR AND APPROVED BY THE ENGINEER PRIOR TO COMMENCING CONSTRUCTION. THE CONSTRUCTION LIMITS MAY BE ADJUSTED BY THE ENGINEER TO PRESERVE TREES AND NO ADDITIONAL COMPENSATION WILL BE PAID TO THE CONTRACTOR FOR CHANGES IN CONSTRUCTION LIMITS.

2. EROSION CONTROL ITEMS ARE CONSIDERED HIGH PRIORITY ITEMS IN THIS CONTRACT. THE ENGINEER WILL IMPLEMENT ALL PROVISIONS OF SPECIFICATIONS NECESSARY TO ASSURE THAT EROSION CONTROL ITEMS ARE CONSTRUCTED AND MAINTAINED IN A TIMELY MANNER. THE CONTRACTOR SHALL INSTALL TEMPORARY EROSION CONTROL MEASURES PRIOR TO THE START OF CONSTRUCTION OPERATIONS WHICH WILL POTENTIALLY CREATE ERODIBLE CONDITIONS. PLACEMENT AND MAINTENANCE OF TEMPORARY EROSION CONTROL SYSTEMS WILL BE UTILIZED THROUGHOUT THE CONSTRUCTION LIMITS.

3. TEMPORARY EROSION CONTROL MEASURES SHALL BE CONSTRUCTED AS SHOWN ON THE PLANS AND AS DIRECTED BY THE ENGINEER. THE WORK SHALL BE COMPLETED IN ACCORDANCE WITH SECTION 280 OF THE STANDARD SPECIFICATIONS, CONTRACT SPECIAL PROVISIONS AND THE STORM WATER POLLUTION PREVENTION PLAN (SWPPP).

4. THE CONTRACTOR SHALL UTILIZE THE GENERAL MAINTENANCE GUIDELINES AS OUTLINED IN THE SWPPP TO ENSURE GOOD AND EFFECTIVE OPERATING CONDITION OF THE VEGETATION AND EROSION AND SEDIMENT CONTROL MEASURES.

5. A COPY OF THE APPROVED EROSION AND SEDIMENT CONTROL PLAN SHALL BE MAINTAINED ON SITE. ALL CHANGES TO THE SOIL EROSION AND SEDIMENT CONTROL PLAN SHALL BE NOTED ON THE PLANS KEPT ON SITE.

6. THE CONTRACTOR SHALL PERFORM ALL WORK AS DIRECTED BY THE ENGINEER AND AS SHOWN IN HIGHWAY STANDARD 280001. THE USE OF STRAW BALES ARE NOT PERMITTED IN DISTRICT ONE.

7. THE EROSION CONTROL MEASURES SHOWN ARE BUT A GRAPHICAL REPRESENTATION OF SUGGESTED MEASURES. DEVIATIONS FROM THIS PLAN ARE TO BE EXPECTED PENDING A JOB SITE INSPECTION BETWEEN THE CONTRACTOR AND THE DEPARTMENT.

8. THE CONTRACTOR WILL BE REQUIRED TO IMPLEMENT AND MAINTAIN SEDIMENT CONTROL MEASURES PRIOR TO STRIPPING EXISTING VEGETATION.

9. THE CONTRACTOR SHALL DESIGNATE ONE OF HIS EMPLOYEES AS RESPONSIBLE FOR IMPLEMENTATION OF THE EROSION AND SEDIMENT CONTROL PLAN ON ALL DISTURBED AREAS. THIS PERSON IS TO BE KNOWLEDGEABLE ABOUT INSTALLATION AND MAINTENANCE OF THE REQUIRED MEASURES. THIS EMPLOYEE IS TO HAVE THEAUTHORITY TO CARRY OUT THE IMPLEMENTATION OF ANY INSTRUCTIONS CONCERNING THE EROSION AND SEDIMENT CONTROL PLAN GIVEN BY THE ENGINEER. ALL MEASURES WILL BE INSPECTED BY THIS INDIVIDUAL AND THE ENGINEER ON A REGULAR BASIS (AT LEAST ONCE EVERY 7 DAYS) AND AFTER RAINFALL EVENTS GREATER THAN 1/2 INCH OR EQUIVALENT SNOWFALL AND AFTER EACH SIGNIFICANT SNOWMELT.

10. THE EXISTING GROUND COVER SHALL REMAIN IN PLACE AND UNDISTRUBED IN AREAS WHERE THERE IS NO PROPOSED GRADING.

11. TOPSOIL SHALL BE PLACED ON SLOPES AFTER COMPLETING FINAL GRADING. TOPSOIL SHALL NOT BE PLACED ON SURFACES THAT WILL BE PAVED IN THE FUTURE OR ON TEMPORARILY STEEP SLOPES.

12. TEMPORARY STOCKPILE LOCATIONS SHALL BE APPROVED BY THE ENGINEER AND WILL REQUIRE SILT FENCE AND TEMPORARY SEEDING.

13. ALL STORM SEWER FACILITIES WITH OPEN LIDS THAT ARE OR WILL BE FUNCTIONING DURING CONSTRUCTION SHALL BE PROTECTED OR FILTERED. ALL DRAINAGE STRUCTURES THAT HAVE OPEN LIDS IN PAVEMENT AREAS SHALL BE PROTECTED WITH INLET FILTERS. THE INLET FILTERS SHALL BE MAINTAINED AT EACH SUBSEQUENT STAGE UNTIL NO LONGER REQUIRED OR AS DIRECTED BY THE ENGINEER.

14. AT THE CONCLUSION OF CONSTRUCTION OPERATIONS, ALL DRAINAGE STRUCTURES SHALL BE FREE FROM DIRT AND DEBRIS. THIS WORK WILL NOT BE PAID FOR SEPARATELY BUT SHALL BE CONSIDERED INCLUDED IN THE COST OF THE CONTRACT.

15. TEMPORARY OR PERMANENT STABILIZATION SHALL BE INSTALLED ON ALL AREAS DISTURBED DURING EACH STAGE OF CONSTRUCTION PRIOR TO SWITCHING TRAFFIC TO BEGIN THE SUBSEQUENT STAGE. ALSO, ALL EROSION CONTROL MEASURES PLACED DURING CONSTRUCTION SHALL REMAIN IN PLACE AND BE MAINTAINED UNTIL COMPLETION OF CONTRACT OR NO LONGER REQUIRED.

16. ALL EROSION AND SEDIMENT CONTROL MEASURES SHALL BE MAINTAINED DURING THE CONSTRUCTION SEASON AS WELL AS THE WINTER MONTHS AND OTHER TIMES WHEN THE PROJECT IS CLOSED DOWN. ALL EROSION AND SEDIMENT CONTROL MEASURES WILL BE MAINTAINED IN ACCORDANCE WITH THE IDOT EROSION AND SEDIMENT CONTROL FIELD GUIDE FOR CONSTRUCTION INSPECTION (DATED JULY 1, 2010) AND IDOT'S BEST MANAGEMENT PRACTICES: (HTTPS://IDOT.ILLINOIS.GOV/CONTENT/DAM/SOI/EN/WEB/IDOT/DOCUMENTS/TRANSPORTATION-SYSTEM/MANUALS-GUIDES-AND-HANDBOOKS/HIGHWAYS/ENVIRONMENT/EROSION-AND-SEDIMENT-CONTROL-FIELD-GUIDE-FOR-CONSTRUCTION-INSPECTION.PDF)

17. THE CONTRACTOR MUST PROVIDE A PLAN TO THE RESIDENT ENGINEER TO ENSURE THAT A STABILIZED FLOW LINE WILL BE PROVIDED DURING STORM SEWER CONSTRUCTION. THE USE OF A STABILIZED FLOW LINE BETWEEN INSTALLED STORM SEWER AND OPEN DISTURBANCE WILL REDUCE THE POTENTIAL FOR THE OFFSITE DISCHARGE OF SEDIMENT-BEARING WATERS, ESPECIALLY WHEN RAIN IS FORECASTED, SO THAT FLOW WILL NOT ERODE. LACK OF APPROVED PLAN OR FAILURE TO COMPLY WILL RESULT IN AN EROSION AND SEDIMENT CONTROL DEFICIENCY DEDUCTION.

18. UNDER NO CIRCUMSTANCES SHALL THE CONTRACTOR PROLONG FINAL GRADING AND SHAPING SO THAT THE ENTIRE PROJECT CAN BE PERMANENTLY SEEDED AT ONE TIME.

19. ALL WORK ASSOCIATED WITH INSTALLATION AND MAINTENANCE OF CONCRETE WASHOUTS IS INCIDENTAL TO THE CONTRACT.

20. SHOULD IT BE NECESSARY TO REMOVE ANY EROSION CONTROL DEVICES FOR CONSTRUCTION REASONS, THE CONTRACTOR SHALL FIRST OBTAIN PERMISSION AND SHALL REPAIR OR REPLACE THE REMOVED DEVICES THE SAME DAY. THE COST OF REMOVING AND REPLACING THE DEVICE SHALL BE INCLUDED IN THE CONTRACT.

21. THE CONTRACTOR WILL ASSUME RESPONSIBILITY FOR MAINTENANCE OF ALL SOIL EROSION CONTROL DURING CONSTRUCTION.

22. ANY LOOSE MATERIAL DEPOSITED IN THE FLOW LINE OF DRAINAGE STRUCTURES, WHICH OBSTRUCTS THE NATURAL FLOW OF WATER, SHALL BE REMOVED AT THE CLOSE OF EACH WORKING DAY. PRIOR TO ACCEPTANCE OF THE IMPROVEMENT, ALL DRAINAGE STRUCTURES SHALL BE FREE OF DIRT AND DEBRIS. THIS WORK WILL NOT BE PAID FOR SEPARATELY BUT SHALL BE CONSIDERED AS INCIDENTAL.

23. CULVERT INLET PROTECTION SHALL CONSIST OF EXCELSIOR DITCH CHECKS. AVOID STRAW BALE AND SILT FENCE PROTECTION DESCRIBED IN STANDARD 28000500. THE CULVERT INLET PROTECTION STRUCTURES SHALL BE REMOVED WHEN THEY HAVE SERVED THEIR USEFUL PURPOSE, BUT NOT BEFORE THE UPSLOPE AREA HAS BEEN PERMANETLY STABILIZED. INSPECT AFTER EVERY RUNOFF PRODUCING RAIN AND MAKE REPAIRS AS NEEDED. SEDIMENT SHALL BE REMOVED WHEN THE SEDIMENT HAS BEEN ACCUMULATED TO ONE-HALF THE HEIGHT OF THE DITCH CHECK.

24. TO THE MAXIMUM EXTENT POSSIBLE, ALL FLOWS ORIGINATING OFF THE CONSTRUCTION SITE WILL BE DIVERTED AROUND DISTURBED AREAS OR WILL BE CONVEYED THROUGH THE SITE IN A MANNER THAT UNTREATED ON-SITE RUNOFF DOES NOT MIX WITH THE OFF-SITE RUNOFF.

25. A MAXIMUM OF 10 ACRES MAY BE IN SOME STAGE OF GRADING AT A SINGLE TIME. ADDITIONAL AREAS (UP TO 10 ACRES) MAY BE CLEARED BUT WILL NOT BE STRIPPED OF VEGETATION UNTIL THE GRADED AREAS HAVE BEEN PROTECTED FROM EROSION THROUGH INSTALLATION OF EITHER TEMPORARY OR PERMANENT MEASURES. WHENEVER POSSIBLE, THE GRADING WILL BE COMPLETED TO THE DESIGN GRADE AND THE PERMANENT VEGETATION PLAN IMPLEMENTED PRIOR TO STARTING GRADING ACTIVITIES ON THE NEXT SITE.

(A) WHEN BALANCING EARTHWORK (BORROW FROM A CUT USED AS FILL AT A LOCATION DISTANT FROM THE CUT) THE ENGINEER WILL CONSIDER ALLOWING MORE THAN 10 ACRES OF GRADING AT A TIME. THE 10 ACRES LIMITATION DOES NOT INCLUDE HAUL ROADS, BRIDGE CONSTRUCTION WORK AREAS AND STORAGE AREAS.

(B) VARIATIONS TO THE ABOVE MAY BE CONSIDERED BY THE ENGINEER UNDER ALL THE FOLLOWING CONDITIONS:
- IF THE CONTRACTOR FALLS BEHIND SCHEDULE THROUGH NO FAULT OF HIS OWN.
- THE CONTRACTOR MUST PRESENT A SCHEDULE DEMONSTRATING THE NEED FOR SUCH VARIATION IN ORDER TO COMPLETE THE WORK ON TIME.
- THE CONTRACTOR MUST COMPLY WITH ALL OTHER CONTRACT REQUIREMENTS.

26. STABILIZATION MEASURES SHOULD BE INSTALLED ON CUT OR FILL SLOPES IN ACCORDANCE WITH THE ILR10 PERMIT REGARDLESS OF HEIGHT OF CUT OR FILL SLOPE. ONCE THE STABILIZATION MEASURES ARE INSTALLED, THE PLACEMENT OF FILL OR EXCAVATION ACTIVITIES ARE ALLOWED TO PROCEED.

27. DISTURBED AREAS ARE TO BE PROTECTED FROM EROSION IN A TIMELY MANNER. UPON COMPLETION OF GRADING OR CONSTRUCTION, THE AREA WILL BE STABILIZED (USING PERMANENT MEASURES WHEN POSSIBLE) WITHIN 1 CALENDAR DAYS. TEMPORARY STABILIZATION THROUGH USE OF GROUND COVER, MULCHING, OR OTHER APPROVED MEASURES WILL BE INSTALLED WHENEVER SITE DEVELOPMENT WORK, GRADING OR OTHER EARTH DISTURBING ACTIVITIES CEASE TO BE CONTINUOUS FOR A PERIOD EXCEEDING 14 CALENDAR DAYS. THE 1/14 DAY REQUIREMENT IS TAKEN TO MEAN THAT THE STABILIZATION OPERATION IS COMPLETE OR NEARING COMPLETION IN THE DEFINED TIME.

28. SALVAGED TOPSOIL SHALL BE PLACED ON WELL DRAINED LAND AWAY FROM INTERMITTENT AND LIVE STREAMS OR WETLANDS WITH THE APPROPRIATE RUNOFF CONTROL AND SEDIMENT CONTROL MEASURES INSTALLED AROUND THE STORAGE SITE AND STABILIZED IMMEDIATELY AFTER FINAL SHAPING OF THE PILE IN ACCORDANCE WITH MULCH, METHOD 2. THE CONTRACTOR WILL PROVIDE AN ADEQUATE QUANTITY OF SILT FENCE TO CONTROL THE PERIMETER OF THE STOCKPILE.

29. MATERIALS EXCAVATED FOR THE CONSTRUCTION OR CLEANOUT OF SEDIMENT TRAPS OR SEDIMENT BASINS SHALL NOT BE STOCKPILED IN THE VICINITY OF THE TRAP OR BASIN. IT WILL EITHER BE PLACED IN AN EMBANKMENT OR WASTED AS DIRECTED BY THE ENGINEER.

30. EXCAVATION TO BE USED FOR EMBANKMENTS SHALL NOT BE STOCKPILED UNLESS PERIMETER CONTROLS ARE UTILIZED. WHEN THIS MATERIAL IS STOCKPILED FOR THE CONVENIENCE OF THE CONTRACTOR THE COST OF THE CONTROLS ARE BORNE BY THE CONTRACTOR. IF THE MATERIAL IS STOCKPILED AT THE DIRECTION OF THE ENGINEER THE DEPARTMENT WILL ASSUME THE COST OF THE CONTROLS.

31. DEWATERING ACTIVITIES WILL BE CONDUCTED UTILIZING A SILT BAG LOCATED ON A STABILIZED SURFACE (RIPRAP). DISCHARGE FROM THE SILT BAG WILL FLOW THROUGH A VEGETATED (STABILIZED) FLOW LINE PRIOR TO DISCHARGING INTO THE RECEIVING WATER.

32. WHEN THE CONTRACTOR REQUESTS A CHANGE TO POSTPONE COMPLETION OF THE EXCAVATION OF A SPECIFIC AREA AS A CONTINUOUS OPERATION AND PLACING THETOPSOIL AS DEFINED IN THE STANDARD SPECIFICATIONS, THE ENGINEER MAY ALLOW THE CONTRACTOR TO STABILIZE THE AREA USING TEMPORARY STABILIZATION WITH STRAW MULCH PROVIDING THE FOLLOWING CONDITIONS ARE MET: (A) ALL AREAS BEING STABILIZED ARE 3:1 SLOPES OR FLATTER. (B) THE CONTRACTOR BEARS THE COST OF PREPARING THE SEED BED AND STABILIZING THE AREA WITH TEMPORARY STABILIZATION WITH STRAW MULCH. (C) ALL REQUIRED SEDIMENT CONTROL MEASURES FOR THE SECTION OF ROAD IN QUESTION HAVE BEEN INSTALLED AND ARE BEING MAINTAINED.

33. WHEN STORM SEWER IS UNDER CONSTRUCTION, CONTRACTOR SHALL PROVIDE A PLAN ACCEPTABLE TO THE ENGINEER TO PREVENT EROSION AND SEDIMENTATION FROM RUNOFF ENTERING OR EXITING THE STORM SEWER CONSTRUCTION.

34. THE DEPARTMENT HAS NOT OBTAINED ANY PERMITS FOR OFFSITE BORROW, WASTE, USE (BWU) AREAS. PRIOR TO WORKING IN BWU AREAS, IF THE CONTRACTOR CHOOSES TO USE ACTIVITIES REQUIRING PERMITS IT IS THE CONTRACTOR'S RESPONSIBILITY TO SECURE THE PROPER PERMITS. IN ADDITION TO THE BORROW REVIEW (BDE 2289) AND USE/WASTE REVIEW(BDE 2290) SUBMITTALS, THE CONTRACTOR SHALL SUBMIT AN EROSION AND SEDIMENT CONTROL (ESC) PLAN FOR EVERY BWU SITE TO THE DEPARTMENT FOR ACCEPTANCE. GUIDELINES FOR ACCEPTABLE BWU PRACTICES CAN BE FOUND IN PART IX. 1 AND 2 OF THE SWPPP. THE COST OF ALL MATERIALS AND LABOR NECESSARY TO COMPLY WITH THE ABOVE PROVISIONS TO PREPARE AND IMPLEMENT ESC PLANS WILL NOT BE PAID FOR SEPARATELY, BUT SHALL BE CONSIDERED AS INCLUDED IN THE UNIT BID PRICES OF THE CONTRACT AND NO ADDITIONAL COMPENSATION WILL BE ALLOWED.

35. THE CONTRACTOR IS RESPONSIBLE FOR INSTALLATION OF ANY ADDITIONAL EROSION CONTROL MEASURES NECESSARY TO PREVENT EROSION AND SEDIMENTATION AS DETERMINED BY THE RESIDENT ENGINEER.

36. ALL PERMANENT SEDIMENT BASINS, PERMANENT STORM WATER CONTROL MEASURES, AND RUNOFF CONTROL MEASURES REQUIRED TO KEEP OFF-SITE RUNOFF FROM FLOWING OVER THE CONSTRUCTION AREA WILL BE INSTALLED BEFORE CLEARING AND STRIPPING OF THE SITE PROCEEDS. PRIOR TO PROCEEDING WITH GENERAL EARTHWORK ON A PROJECT THE CONTRACTOR WILL OBTAIN APPROVAL OF HIS PROPOSED EARTHWORK AND STABILIZATION SCHEDULE.

37. THE ACTUAL NEED FOR TEMPORARY DRAINAGE FACILITIES, AS WELL AS THE STAGING OF THE PERMANENT DRAINAGE SYSTEM CONSTRUCTION, MAY BE MODIFIED BY THE ENGINEER, WHO SHALL BE CONSULTED BEFORE THE INSTALLATION.

38. INLET FILTERS ARE REQUIRED FOR THE STRUCTURES SHOWN ON THE PLANS. STRUCTURE OPENINGS VARY SUCH THAT FIELD MEASUREMENT AND/OR CONTRACTOR DESIGN WILL BE REQUIRED. COST OF DESIGN, LABOR AND MATERIALS WILL NOT BE PAID FOR SEPARATELY, BUT WILL BE INCLUDED IN THE CONTRACT UNIT PRICE PER EACH FOR "INLET FILTER". THE INLET FILTERS SHALL BE IMMEDIATELY INSTALLED, AND MAINTAINED AT EACH SUBSEQUENT STAGE UNTIL COMPLETION OF STAGING OR UNTIL NO LONGER REQUIRED.

39. THE CONTRACTOR SHALL CHECK ALL ESC MEASURES WEEKLY AND AFTER EACH RAINFALL, 0.5 INCHES OR GREATER IN A 24 HOUR PERIOD, OR EQUIVALENT SNOWFALL. DURING WINTER MONTHS, ALL MEASURES SHOULD BE CHECKED BY THE CONTRACTOR AFTER EACH SIGNIFICANT SNOWMELT.

40. "WETLANDS NO INTRUSION" SIGNAGE SHALL BE INSTALLED AT THE BOUNDARY OF ALL UN-IMPACTED WETLANDS AND/OR WOUS. INCLUDE TEMPORARY FENCING AND WETLAND SIGNAGE WITHIN THE EROSION AND SEDIMENT CONTROL STRATEGY. "WETLAND NO INTRUSION" SIGNAGE CAN BE OBTAINED FROM STEVE LIPKE AT IDOT BUREAU OF MAINTENANCE, AND SHALL BE RETURNED UNDAMAGED OR REPLACED AT THE END OF THE CONTRACT.

41. THE CONTRACTOR SHALL CONSTRUCT THE WETLAND EXCLUSION FENCING AND THE "WETLAND NO INTRUSION" SIGNAGE PRIOR TO THE START OF THE CONSTRUCTION. THE COST OF THIS WORK SHALL BE INCLUDED IN THE COST OF "TEMPORARY CONSTRUCTION FENCE".

42. HEAVY-DUTY EROSION CONTROL BLANKET SHALL BE USED AT LOCATIONS WHERE THE SLOPE IS STEEPER THAN 1:3.

INSPECTION AND MAINTENANCE

1. PERIMETER EROSION BARRIER - BUILT UP SEDIMENT SHALL BE REMOVED FROM THE BARRIER IF THE INTEGRITY OF THE BARRIER IS IN JEOPARDY. BARRIERS WILL BE INSPECTED FOR DEPTH OF SEDIMENT AND TEARS TO SEE IF THE FABRIC IS SECURELY ATTACHED TO THE BARRIER POSTS AND TO SEE THAT THE BARRIER POSTS ARE FIRMLY IN THE GROUND. REPAIR BARRIERS AND POSTS AS NECESSARY.

2. DITCH CHECKS - INSPECT DITCH IF FLOW IS BEING IMPEDED BY SEDIMENT AND INSPECT STONE FOR EVIDENCE OF WASH OUT. BUILT UP SEDIMENT SHALL BE REMOVED WHEN IT HAS REACHED ONE HALF THE HEIGHT OF THE DITCH CHECK, WITH STONE REPLACED OR ADDED AS NECESSARY.

3. LOCATIONS WHERE VEHICLES ENTER AND EXIT THE SITE - INSPECT FOR EVIDENCE OF OFF-SITE SEDIMENT TRACKING. REMOVE SEDIMENT AS NEEDED.

4. INLET PROTECTION - INSPECT FABRIC FOR TEARS AND REMOVE SEDIMENT WHEN FILTER IS ONE QUARTER FULL.

5. RIP RAP - INSPECT RIP RAP FOR WASH OUT. REPAIR OR ADD SPECIFIED GRADATION OF RIPRAP AS NECESSARY.

6. ON A WEEKLY BASIS, THE ENGINEER SHALL INSPECT THE PROJECT TO DETERMINE WHETHER EROSION CONTROL EFFORTS ARE IN PLACE AND EFFECTIVE AND IF ADDITIONAL CONTROL MEASURES ARE NECESSARY. SEDIMENT COLLECTED DURING CONSTRUCTION BY THE VARIOUS TEMPORARY EROSION CONTROL SYSTEMS SHALL BE DISPOSED ON THE SITE ON A REGULAR BASIS AS DIRECTED BY THE ENGINEER AND STABILIZED ACCORDINGLY.

EROSION CONTROL SEQUENCE OF CONSTRUCTION

1. THE FOLLOWING MEASURES ARE TO BE INSTALLED PRIOR TO CLEARING AND GRADING:

2. ERECT PERIMETER EROSION BARRIER AS SHOWN ON THE EROSION CONTOL PLANS.

3. INSTALL INLET AND OUTLET PROTECTION AS SHOWN ON THE EROSION AND SEDIMENT CONTROL PLANS.

4. INSTALL DITCH CHECKS ON EXISTING DITCHES NEAR PROPOSED CONSTRUCTION AREAS WHERE USED IN LIEU OF PERIMETER EROSION BARRIER, AS SHOWN ON THE EROSION AND SEDIMENT CONTROL PLANS.

5. INSTALL PERMANENT SEEDING AND EROSION CONTROL BLANKET AS SHOWN ON THE EROSION AND SEDIMENT CONTROL PLANS.

6. REMOVE TEMPORARY EROSION AND SEDIMENT CONTROL ITEMS.

EROSION AND SEDIMENT CONTROL SCHEDULE

LOCATION	PERMENANT		TEMPORARY					
	SEEDING, CLASS 2A	SEEDING, CLASS 4	EROSION CONTROL BLANKET	HEAVY DUTY EROSION CONTROL BLANKET	TEMPORARY DITCH CHECKS	PERIMETER EROSION BARRIER	INLET FILTERS	TEMPORARY CONSTRUCTION FENCE
	25000210	25000310	25100630	25100635	28000305	28000400	28000510	X6640638
	ACRE	ACRE	SQ YD	SQ YD	FOOT	FOOT	EACH	EACH
FRONTAGE RD STA 46+50 RT TO 48+50 RT	0.01	-	43	-	30	182	-	236
I-80 STA 718+50 RT TO STA 720+72 RT	0.08	0.03	-	2424	-	80	-	-
I-80 STA 718+50 LT TO STA 721+38 LT	0.05	0.02	-	526	-	73	1	-
I-80 STA 722+29 LT TO STA 724+47 LT	0.03	0.02	-	2876	-	66	1	-
I-80 STA 722+12 RT TO STA 725+10 RT	0.16	0.03	-	170	-	-	-	-
I-80 STA 726+60 LT TO STA 730+30 LT	0.20	-	897	-	-	-	-	-
I-80 STA 727+59 RT TO STA 730+05 RT	0.31	-	1494	-	-	-	-	-
I-80 STA 730+90 RT TO STA 734+36 RT	0.30	-	1421	-	60	-	-	-
I-80 STA 731+09 LT TO STA 735+40 LT	0.22	-	1020	-	-	-	1	-
I-80 STA 745+60 LT TO STA 748+00 LT	0.08	-	359	-	-	-	1	-
I-80 STA 748+00 LT TO STA 760+50 LT	0.72	-	771	727	60	-	-	-
I-80 STA 748+00 RT TO STA 761+00 RT	0.75	-	1305	111	-	388	2	360
RICHARDS ST STA 53+95 TO STA 59+51		-	-	-	-	-	2	-
RICHARDS ST RAMP A STA 109+00 RT TO STA 114+18 RT	0.39	-	1872	-	-	-	4	-
RICHARDS ST RAMP B STA 10+00 RT TO STA 28+34 RT	0.83	-	3962	-	-	-	12	-
RICHARDS ST RAMP B STA 11+36 LT TO STA 14+50 LT	0.22	-	1050	-	-	-	-	-
RICHARDS ST RAMP C STA 100+00 RT TO STA 110+55 RT	0.24	-	1137	-	-	-	6	-
RICHARDS ST RAMP D STA 8+80 RT TO STA 11+19 RT	0.12	-	541	-	-	-	-	-
ROUNDING	0.04	0.15	-	-	-	-	-	-
TOTAL	4.75	0.25	15872	6834	150	789	30	596

MODEL: 2D SHEET H
FILE NAME: C:\TRANSYSTEMS\PW_LOCAL\TRANSYSTEMS-PW-01\DMS31452\62R19-SHT-EROS-SCHEDO1.DGN

exp.

USER NAME = SALASL	DESIGNED - CMA	REVISED -	
	DRAWN - CMA	REVISED -	
PLOT SCALE = 0.16666667 ' / IN.	CHECKED - SH	REVISED -	
PLOT DATE = 11/12/2025	DATE - 11/12/2025	REVISED -	

STATE OF ILLINOIS
DEPARTMENT OF TRANSPORTATION

I-80
EROSION AND SEDIMENT CONTROL SCHEDULE

SCALE: NTS | SHEET OF SHEETS | STA. TO STA.

F.A.I. RTE.	SECTION	COUNTY	TOTAL SHEETS	SHEET NO.
80	FAI 80 21 VLS	VARIOUS	467	41
		CONTRACT NO. 62R19		
	ILLINOIS	FED. AID PROJECT		

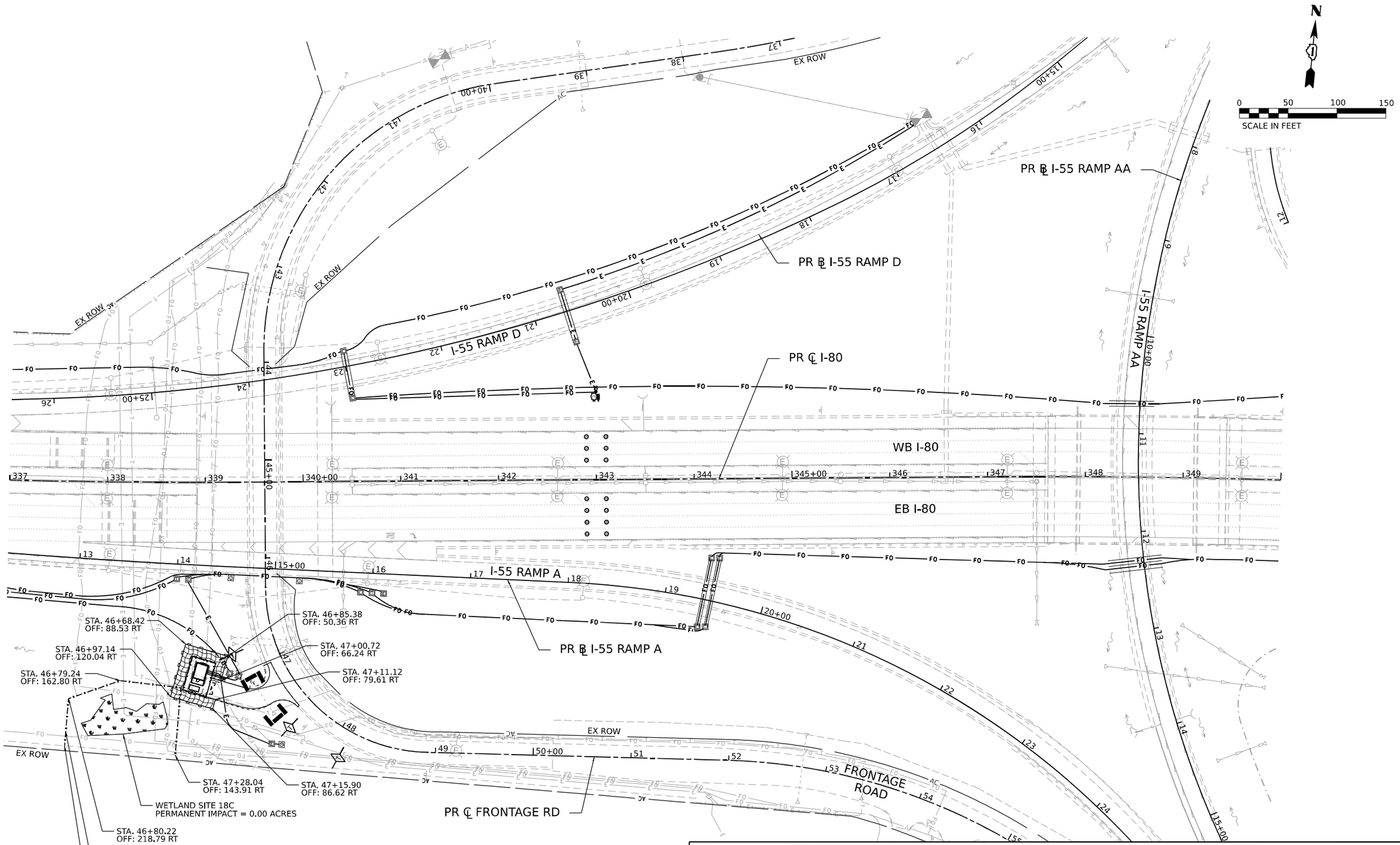

EROSION CONTROL LEGEND

- INLET FILTER
- TEMPORARY DITCH CHECK
- PERIMETER EROSION BARRIER
- INLET/OUTLET PROTECTION (UTILIZING TEMPORARY DITCH CHECKS)
- WETLAND EXCLUSION FENCING
- SEEDING, CLASS 2A EROSION CONTROL BLANKET TOPSOIL FURNISH AND PLACE, 4" NITROGEN, AND POTASSIUM FERTILIZER NUTRIENT
- SEEDING, CLASS 2A HEAVY DUTY EROSION CONTROL BLANKET TOPSOIL FURNISH AND PLACE, 4" NITROGEN, AND POTASSIUM FERTILIZER NUTRIENT
- SEEDING, CLASS 4 HEAVY DUTY EROSION CONTROL BLANKET TOPSOIL FURNISH AND PLACE, 4" NITROGEN, AND POTASSIUM FERTILIZER NUTRIENT

MODEL: PR I-80 - PLAN 15 [SHEET]
FILE NAME: C:\TRANSYSTEMS\PW_LOCAL\TRANSYSTEMS-PW-01\DMS31453\62R19-SHT-EROS-PLAN-01.DGN

exp.

USER NAME = SALASL	DESIGNED - CMA	REVISED -	
	DRAWN - CMA	REVISED -	
PLOT SCALE = 0.16666667 ' / IN.	CHECKED - SH	REVISED -	
PLOT DATE = 11/12/2025	DATE - 11/12/2025	REVISED -	

STATE OF ILLINOIS
DEPARTMENT OF TRANSPORTATION

I-80
EROSION AND SEDIMENT CONTROL PLANS

SCALE: 1"=50' | SHEET OF SHEETS | STA. TO STA.

F.A.I. RTE.	SECTION	COUNTY	TOTAL SHEETS	SHEET NO.
80	FAI 80 21 VLS	VARIOUS	467	42

CONTRACT NO. 62R19

ILLINOIS | FED. AID PROJECT

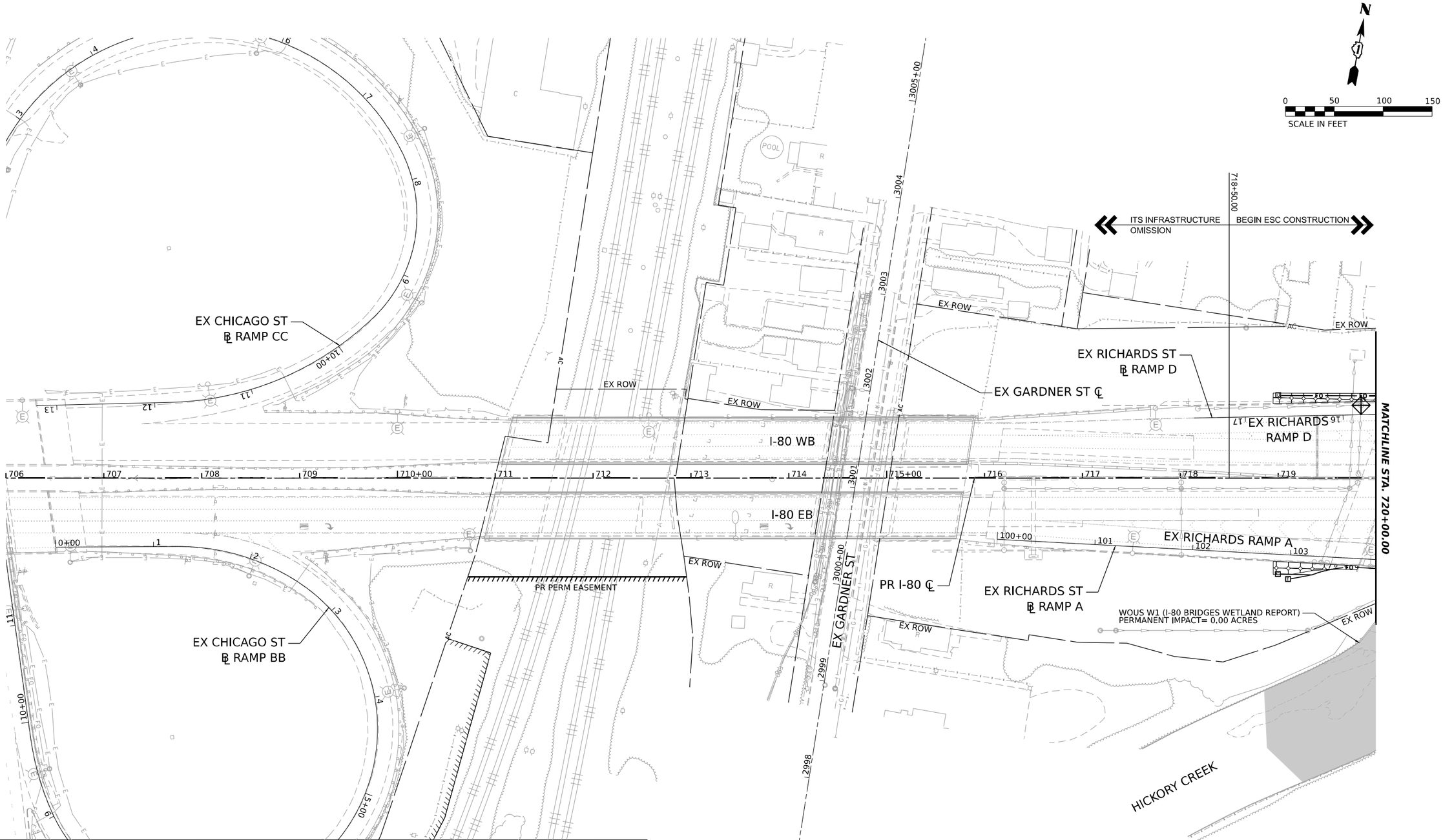

EROSION CONTROL LEGEND

- INLET FILTER
- TEMPORARY DITCH CHECK
- PERIMETER EROSION BARRIER
- INLET/OUTLET PROTECTION (UTILIZING TEMPORARY DITCH CHECKS)
- WETLAND EXCLUSION FENCING
- SEEDING, CLASS 2A EROSION CONTROL BLANKET TOPSOIL FURNISH AND PLACE, 4" NITROGEN, AND POTASSIUM FERTILIZER NUTRIENT
- SEEDING, CLASS 2A HEAVY DUTY EROSION CONTROL BLANKET TOPSOIL FURNISH AND PLACE, 4" NITROGEN, AND POTASSIUM FERTILIZER NUTRIENT
- SEEDING, CLASS 4 HEAVY DUTY EROSION CONTROL BLANKET TOPSOIL FURNISH AND PLACE, 4" NITROGEN, AND POTASSIUM FERTILIZER NUTRIENT

MODEL: PR I-80 - PLAN 45 [SHEET]
FILE NAME: C:\TRANSYSTEMS\PW_LOCAL\TRANSYSTEMS-PW-01\DMS31452\62R19-SHT-EROS-PLAN-02.DGN

exp.

USER NAME = SALASL	DESIGNED - CMA	REVISED -	
	DRAWN - CMA	REVISED -	
PLOT SCALE = 0.16666667 ' / IN.	CHECKED - SH	REVISED -	
PLOT DATE = 11/12/2025	DATE - 11/12/2025	REVISED -	

STATE OF ILLINOIS
DEPARTMENT OF TRANSPORTATION

I-80
EROSION AND SEDIMENT CONTROL PLANS

SCALE: 1"=50' | SHEET OF SHEETS | STA. TO STA.

F.A.I. RTE.	SECTION	COUNTY	TOTAL SHEETS	SHEET NO.
80	FAI 80 21 VLS	VARIOUS	467	43
		CONTRACT NO. 62R19		
	ILLINOIS	FED. AID PROJECT		

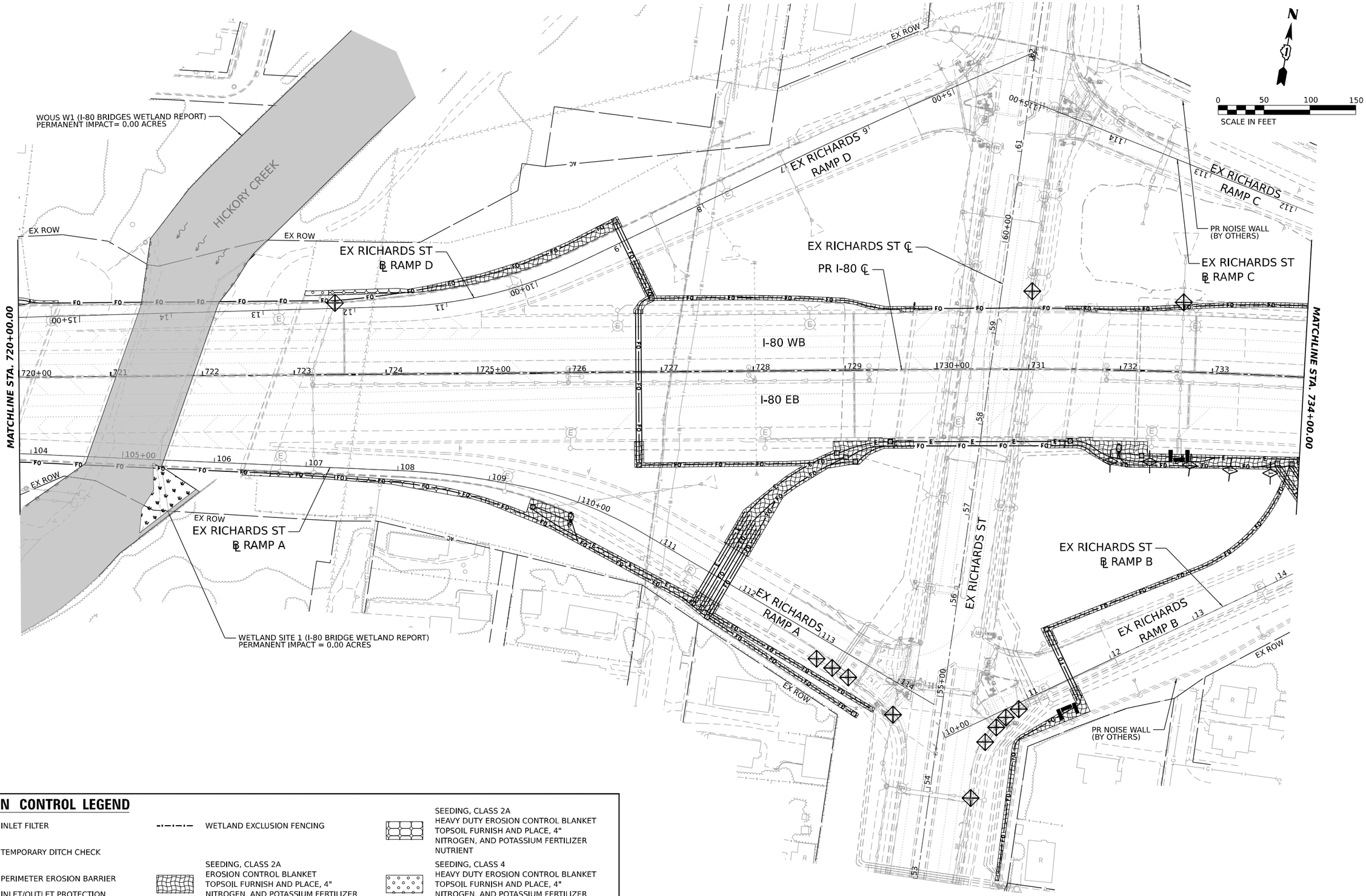

EROSION CONTROL LEGEND

- INLET FILTER
- TEMPORARY DITCH CHECK
- PERIMETER EROSION BARRIER
- INLET/OUTLET PROTECTION (UTILIZING TEMPORARY DITCH CHECKS)
- WETLAND EXCLUSION FENCING
- SEEDING, CLASS 2A EROSION CONTROL BLANKET TOPSOIL FURNISH AND PLACE, 4" NITROGEN, AND POTASSIUM FERTILIZER NUTRIENT
- SEEDING, CLASS 2A HEAVY DUTY EROSION CONTROL BLANKET TOPSOIL FURNISH AND PLACE, 4" NITROGEN, AND POTASSIUM FERTILIZER NUTRIENT
- SEEDING, CLASS 4 HEAVY DUTY EROSION CONTROL BLANKET TOPSOIL FURNISH AND PLACE, 4" NITROGEN, AND POTASSIUM FERTILIZER NUTRIENT

MODEL: PR I-80 - PLAN 46 [SHEET]
FILE NAME: C:\TRANSYSTEMS\PW_LOCAL\TRANSYSTEMS-PW-01\DMS31452\62R19-SHT-EROS-PLAN-03.DGN

exp.

USER NAME = SALASL	DESIGNED - CMA	REVISED -	
	DRAWN - CMA	REVISED -	
PLOT SCALE = 0.16666667 ' / IN.	CHECKED - SH	REVISED -	
PLOT DATE = 11/12/2025	DATE - 11/12/2025	REVISED -	

STATE OF ILLINOIS
DEPARTMENT OF TRANSPORTATION

I-80
EROSION AND SEDIMENT CONTROL PLANS

SCALE: 1"=50' | SHEET OF SHEETS | STA. TO STA.

F.A.I. RTE.	SECTION	COUNTY	TOTAL SHEETS	SHEET NO.
80	FAI 80 21 VLS	VARIOUS	467	44

CONTRACT NO. 62R19

ILLINOIS | FED. AID PROJECT

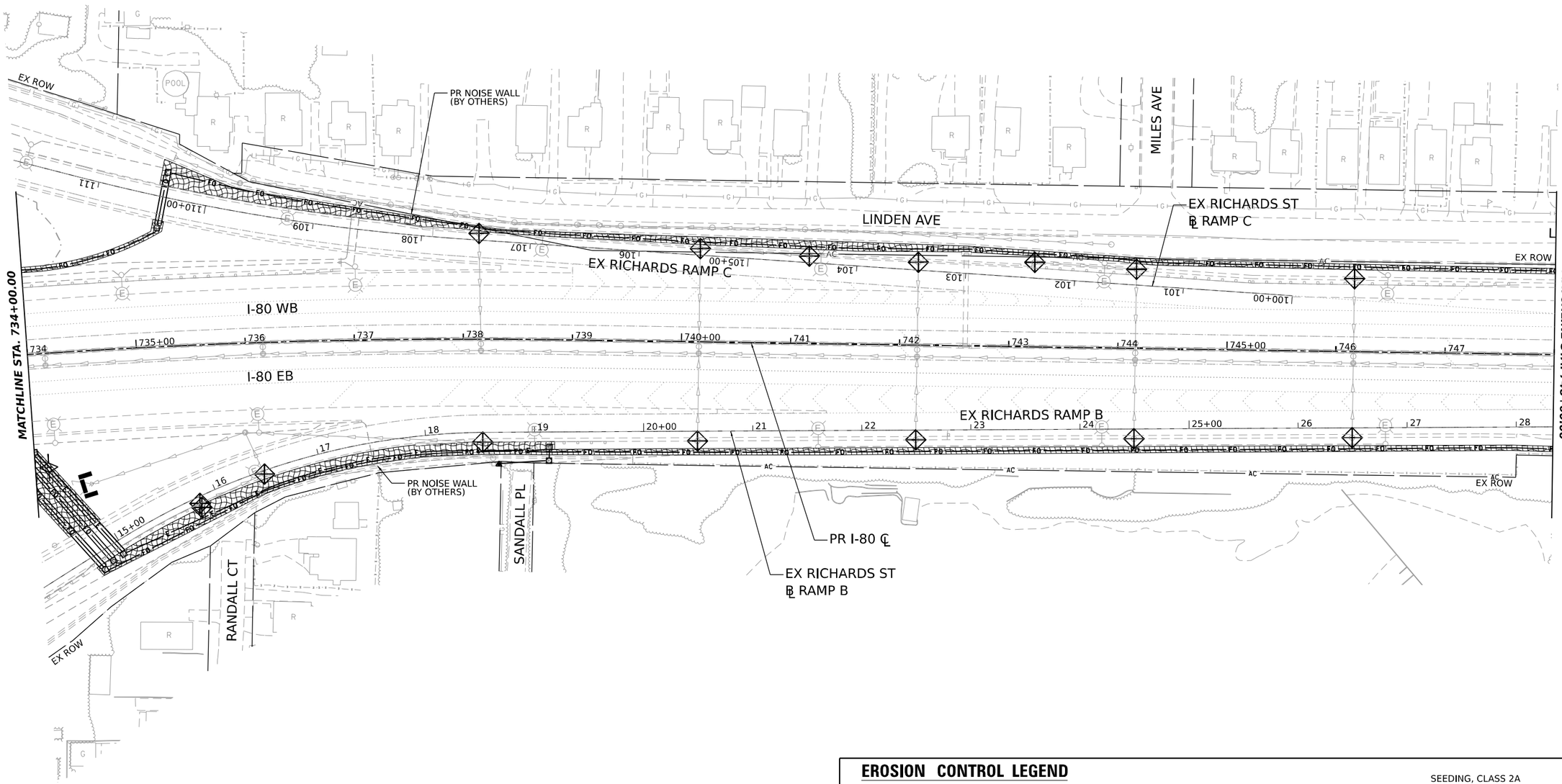

EROSION CONTROL LEGEND

- INLET FILTER
- TEMPORARY DITCH CHECK
- PERIMETER EROSION BARRIER
- INLET/OUTLET PROTECTION (UTILIZING TEMPORARY DITCH CHECKS)
- WETLAND EXCLUSION FENCING
- SEEDING, CLASS 2A EROSION CONTROL BLANKET TOPSOIL FURNISH AND PLACE, 4" NITROGEN, AND POTASSIUM FERTILIZER NUTRIENT
- SEEDING, CLASS 2A HEAVY DUTY EROSION CONTROL BLANKET TOPSOIL FURNISH AND PLACE, 4" NITROGEN, AND POTASSIUM FERTILIZER NUTRIENT
- SEEDING, CLASS 4 HEAVY DUTY EROSION CONTROL BLANKET TOPSOIL FURNISH AND PLACE, 4" NITROGEN, AND POTASSIUM FERTILIZER NUTRIENT

MODEL: PR I-80 - PLAN 47 [SHEET]
FILE NAME: C:\TRANSYSTEMS\PW_LOCAL\TRANSYSTEMS-PW-01\DMS31452\62R19-SHT-EROS-PLAN-34.DGN

exp.

USER NAME = SALASL	DESIGNED - CMA	REVISED -	
	DRAWN - CMA	REVISED -	
PLOT SCALE = 0.16666667 ' / IN.	CHECKED - SH	REVISED -	
PLOT DATE = 11/12/2025	DATE - 11/12/2025	REVISED -	

STATE OF ILLINOIS
DEPARTMENT OF TRANSPORTATION

I-80
EROSION AND SEDIMENT CONTROL PLANS

SCALE: 1"=50' | SHEET OF SHEETS | STA. TO STA.

F.A.I. RTE.	SECTION	COUNTY	TOTAL SHEETS	SHEET NO.
80	FAI 80 21 VLS	VARIOUS	467	45
		CONTRACT NO. 62R19		
	ILLINOIS	FED. AID PROJECT		

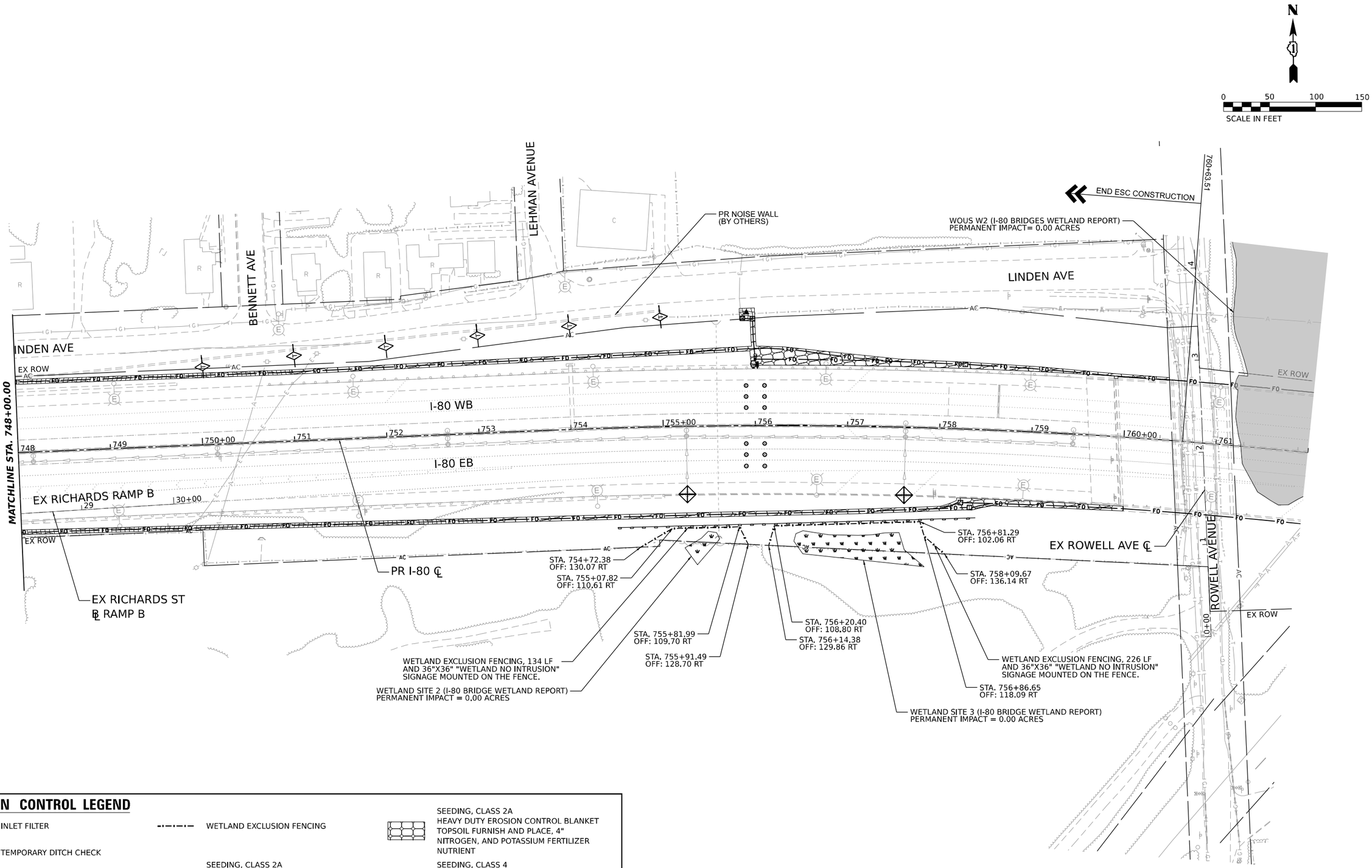

EROSION CONTROL LEGEND

- INLET FILTER
- TEMPORARY DITCH CHECK
- PERIMETER EROSION BARRIER
- INLET/OUTLET PROTECTION (UTILIZING TEMPORARY DITCH CHECKS)
- WETLAND EXCLUSION FENCING
- SEEDING, CLASS 2A EROSION CONTROL BLANKET TOPSOIL FURNISH AND PLACE, 4" NITROGEN, AND POTASSIUM FERTILIZER NUTRIENT
- SEEDING, CLASS 2A HEAVY DUTY EROSION CONTROL BLANKET TOPSOIL FURNISH AND PLACE, 4" NITROGEN, AND POTASSIUM FERTILIZER NUTRIENT
- SEEDING, CLASS 4 HEAVY DUTY EROSION CONTROL BLANKET TOPSOIL FURNISH AND PLACE, 4" NITROGEN, AND POTASSIUM FERTILIZER NUTRIENT

MODEL: PR I-80 - PLAN 48 [SHEET]
FILE NAME: C:\TRANSYSTEMS\PW_LOCAL\TRANSYSTEMS-PW-01\DMS31452\62R19-SHT-EROS-PLAN-05.DGN

exp.

USER NAME = SALASL	DESIGNED - CMA	REVISED -	
	DRAWN - CMA	REVISED -	
PLOT SCALE = 0.16666667 ' / IN.	CHECKED - SH	REVISED -	
PLOT DATE = 11/12/2025	DATE - 11/12/2025	REVISED -	

STATE OF ILLINOIS
DEPARTMENT OF TRANSPORTATION

I-80
EROSION AND SEDIMENT CONTROL PLANS

SCALE: 1"=50' | SHEET OF SHEETS | STA. TO STA.

F.A.I. RTE.	SECTION	COUNTY	TOTAL SHEETS	SHEET NO.
80	FAI 80 21 VLS	VARIOUS	467	46
		CONTRACT NO. 62R19		
		ILLINOIS	FED. AID PROJECT	

EROSION AND SEDIMENT CONTROL DETAILS

PLASTIC PERMEABLE CHECKS

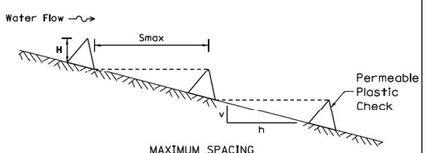

MAXIMUM SPACING

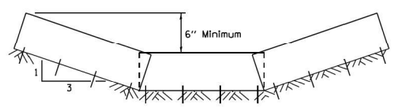

TYPICAL DITCH CROSS SECTION

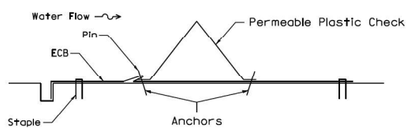

PLASTIC PERMEABLE CHECK CROSS SECTION

REFERENCE		STANDARD DWG. NO.
Project		IUM-514
Designed ____ Date ____		SHEET 1 OF 1
Checked ____ Date ____		DATE 8-19-11
Approved ____ Date ____		

AUTOCAD2006

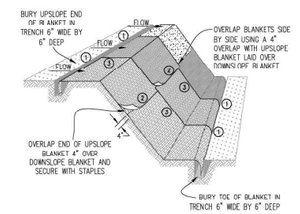

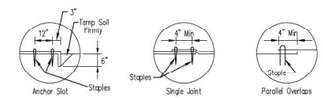

DETAIL 1 DETAIL 2 DETAIL 3

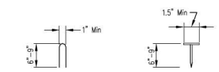

STAPLE DETAIL PUSH PIN DETAIL

NOTES:

1. Staples shall be placed in a diamond pattern at 2 per s.y. for stiched blankets. Non stiched shall use 4 staples per s.y. of material. This equates to 200 staples with stiched blanket and 400 stapels with non-stiched blanket per 100 s.y. of material.
2. Staple or push pin lengths shall be selected based on soil type and conditions. (minimum staple length is 6")
3. Erosion control material shall be placed in contact with the soil over a prepared seedbed.
4. All anchor slots shall be stapled at approximately 12" intervals.

Scale: N.T.S.	EROSION CONTROL BLANKET INSTALLATION DETAILS	Designed ____	Date ____
Date: 11/12/2025		Drawn B. JOHNSON	11/08
Filename: 62R19-SHT-EROS-DETAIL-01		Checked ____	
		Approved ____	

INLET PROTECTION - PAVED AREAS DROP-IN PROTECTION

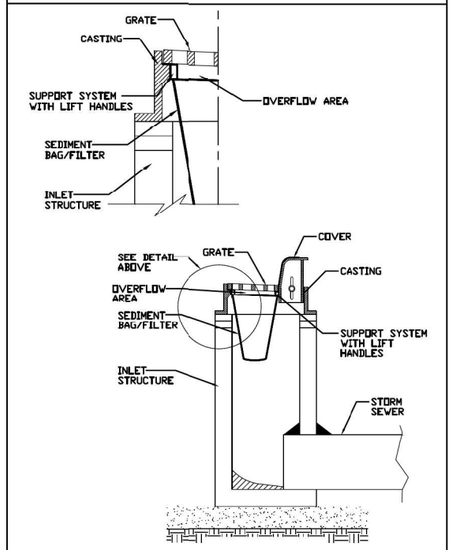

REFERENCE		STANDARD DWG. NO.
Project		IUM-561D
Designed ____ Date ____		SHEET 1 OF 1
Checked ____ Date ____		DATE 01-11-11
Approved ____ Date ____		

INLET PROTECTION LOG TYPE

NOT TO SCALE

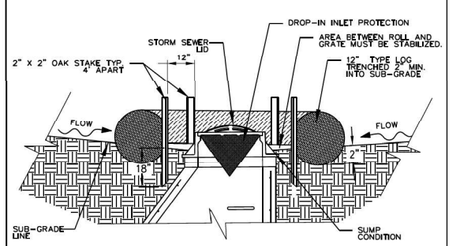

SECTION

NOTES:
1. 2" x 2" nominal hardwood stakes, 4 foot minimum length, driven into ground approximately 18 inches, stakes driven a minimum width of 12 inches away from the drop inlet.
2. Area inside the log, from edge of fabric to structure, must be stabilized with erosion control blanket. Turf Reinforcement Mat, Geotextile 592 Table 2 Class 2 or CA-7 stone.
3. The maximum distance between the stakes should be 4 feet.
4. A maintenance schedule must maintain a sediment accumulation of less than 50% of the height of the log.

REFERENCE		STANDARD DWG. NO.
Project		IUM-562
Designed ____ Date ____		SHEET 1 OF 1
Checked ____ Date ____		DATE 11-30-2015
Approved ____ Date ____		

SILT FENCE PLAN

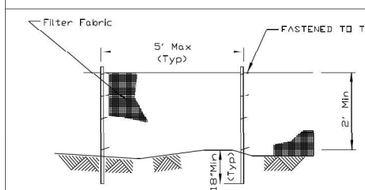

ELEVATION

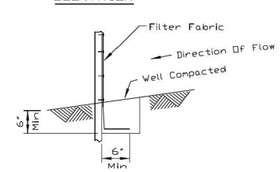

FABRIC ANCHOR DETAIL

NOTES:
1. Temporary sediment fence shall be installed prior to any grading work in the area to be protected. They shall be maintained throughout the construction period and removed in conjunction with the final grading and site stabilization.
2. Filter fabric shall meet the requirements of material specification 592 Geotextile Table 1, Class 2.
3. Fence posts shall be either standard steel post or wood post 2" X 2" nominal.

REFERENCE		STANDARD DWG. NO.
Project		IUM-620A
Designed ____ Date ____		SHEET 1 OF 2
Checked ____ Date ____		DATE 04-15-2021
Approved ____ Date ____		

MODEL: 2D SHEET H
FILE NAME: C:\TRANSYSTEMS\PW_LOCAL\TRANSYSTEMS-PW-01\DMS31452\62R19-SHT-EROS-DETAIL-01.DGN

exp.

USER NAME = SALASL	DESIGNED - CMA	REVISED -	
	DRAWN - CMA	REVISED -	
PLOT SCALE = 0.16666667 ' / IN.	CHECKED - SH	REVISED -	
PLOT DATE = 11/12/2025	DATE - 11/12/2025	REVISED -	

STATE OF ILLINOIS
DEPARTMENT OF TRANSPORTATION

I-80
EROSION AND SEDIMENT CONTROL DETAILS

SCALE: NTS | SHEET OF SHEETS | STA. TO STA.

F.A.I. RTE.	SECTION	COUNTY	TOTAL SHEETS	SHEET NO.
80	FAI 80 21 VLS	VARIOUS	467	47
		CONTRACT NO. 62R19		
		ILLINOIS	FED. AID PROJECT	

SUGGESTED STAGING AND TRAFFIC CONTROL GENERAL NOTES

1. THE CONTRACTOR SHALL REQUEST AND GAIN APPROVAL FROM THE ILLINOIS DEPARTMENT OF TRANSPORTATION'S EXPRESSWAY TRAFFIC OPERATIONS ENGINEER AT WWW.IDOTLCS.COM TWENTY-FOUR (24) HOURS IN ADVANCE OF ALL DAILY LANE, RAMP, AND SHOULDER CLOSURES AND 7 DAYS IN ADVANCE OF ALL PERMANENT AND WEEKEND CLOSURES ON ALL FREEWAYS AND/OR EXPRESSWAYS IN DISTRICT ONE. THIS ADVANCE NOTIFICATION IS CALCULATED BASED ON A WORKWEEK OF MONDAY THROUGH FRIDAY AND SHALL NOT INCLUDE WEEKENDS OR HOLIDAYS.

2. TYPE I, TYPE II, AND TYPE III BARRICADES SHALL BE WEIGHTED IN A MANNER APPROVED BY THE MANUFACTURER SO THEY ARE NOT MOVED BY TRAFFIC, WEATHER, OR OTHER UNINTENDED MEANS.

3. THE CONTRACTOR IS DIRECTED TO THE FACT THAT OTHER SEPARATE CONTRACTS ARE, OR MAY BE, IN FORCE THAT INTERSECT THE LIMITS OF THIS PROJECT. THE CONTRACTOR SHALL COOPERATE WITH THE OTHER CONTRACTORS IN THE PHASING AND PERFORMANCE OF THIS WORK SO AS NOT TO DELAY, INTERRUPT, OR HINDER THE PROGRESS OR COMPLETION OF THE WORK BEING PERFORMED BY OTHER CONTRACTORS. THE CONTRACTOR SHALL TAKE INTO CONSIDERATION THE REQUIREMENTS OUTLINED IN THE SPECIAL PROVISION "CONTRACTOR COOPERATION" WHEN WORKING WITH OTHER CONTRACTORS AND THE DEPARTMENT. NO ADDITIONAL COMPENSATION WILL BE ALLOWED FOR COMPLIANCE WITH THE ABOVE REQUIREMENTS, NOR FOR ANY DELAYS OR INCONVENIENCES RESULTING FROM THE ACTIVITIES OF OTHER CONTRACTORS. SHOULD A CONFLICT ARISE BETWEEN THE CONTRACTORS WITH RESPECT TO SEQUENCE OF CONSTRUCTION OR MAINTENANCE OF TRAFFIC REQUIREMENTS, SAID CONFLICTS SHALL BE RESOLVED BY, OR AT THE DIRECTION OF THE ENGINEER.

4. NO ADDITIONAL COMPENSATION FOR PREMIUM TIME WILL BE PROVIDED FOR WORK REQUIRING OFF-PEAK OR WEEKEND LANE CLOSURES.

5. THE CONTRACTOR MUST COORDINATE ALL LANE CLOSURES WITH THE ENGINEER.

6. WORK IS TO BE PERFORMED IN ACCORDANCE WITH THE "KEEPING THE EXPRESSWAY OPEN TO TRAFFIC" (KEOTT) AND PER STATE AND DISTRICT 1 HIGHWAY STANDARDS FOR TRAFFIC CONTROL. ALL TRAFFIC CONTROL DEVICES AND SIGNAGE REQUIRED ON THE I-80 EXPRESSWAY AND RAMPS SHALL BE IN ACCORDANCE WITH THE APPLICABLE IDOT DISTRICT 1 STANDARDS, IDOT HIGHWAY STANDARDS, AND THESE CONTRACT DRAWINGS. ALL WORK SHOWN IS TO BE INCLUDED IN "TRAFFIC CONTROL AND PROTECTION (EXPRESSWAYS) AND "TRAFFIC CONTROL AND PROTECTION, (SPECIAL)" UNLESS OTHERWISE NOTED.

7. LANE CLOSURES, RAMP CLOSURES, SIGNING, PAVEMENT MARKING, AND BARRICADE PLACEMENT SHALL BE IN ACCORDANCE WITH THE LATEST HIGHWAY STANDARD DRAWINGS AND IDOT DISTRICT 1 STANDARD DETAILS AS APPLICABLE.

8. ALL TEMPORARY SIGNS AND SIGN SUPPORTS SHALL BE IN COMPLIANCE WITH ARTICLE 701.14 OF THE SSRBC AND THE SPECIAL PROVISIONS, INCLUDING WORK ZONE TRAFFIC CONTROL DEVICES (BDE).

9. CHECK BARRICADES SHALL BE USED WHEN APPLICABLE. CONES WILL NOT BE ALLOWED.

10. ANY EXISTING SIGNS DENOTED WITHIN THE PLAN SET THAT DO NOT APPLY TO THE REVISED TRAFFIC PATTERNS SHALL BE REMOVED OR COVERED AS DIRECTED BY THE ENGINEER. THE COVERING OR REMOVAL OF GROUND MOUNTED AND OVERHEAD SIGNS SHALL BE NON-DESTRUCTIVE IN NATURE, WILL NOT BE MEASURED FOR PAYMENT, AND SHALL BE CONSIDERED INCLUDED IN THE CONTRACT UNIT PRICE OF "TRAFFIC CONTROL AND PROTECTION (EXPRESSWAYS) AND "TRAFFIC CONTROL AND PROTECTION, (SPECIAL)"

11. MOVING OPERATIONS PER STATE STANDARD 701426 WILL NOT BE PERMITTED UNLESS APPROVED BY THE ENGINEER.

12. TRAFFIC CONDITIONS, CRASHES, AND OTHER UNFORESEEN EMERGENCY CONDITIONS MAY REQUIRE THE ENGINEER TO RESTRICT, MODIFY OR REMOVE LANE CLOSURES OR CHANNELIZATION SHOWN ON THE PLANS. THE CONTRACTOR SHALL MAKE THE NECESSARY ADJUSTMENTS AS DIRECTED BY THE ENGINEER WITHOUT DELAY. COMPLIANCE WITH THIS REQUIREMENT SHALL BE CONSIDERED INCLUDED IN THE CONTRACT UNIT PRICE OF THE MAINTENANCE OF TRAFFIC ITEM. NO ADDITIONAL COMPENSATION WILL BE ALLOWED.

13. TRAFFIC CONTROL DEVICES INCLUDING, BUT NOT LIMITED TO DRUMS, VERTICAL PANELS, AND BARRICADES IMMEDIATELY ADJACENT TO THE EDGE OF TRAVELED WAY SHALL BE EQUIPPED WITH LIGHTS PER STANDARD SPECIFICATIONS ARTICLE 701.16, UNLESS OTHERWISE INDICATED.

14. THE "ROAD CONSTRUCTION AHEAD" SIGNS SHALL REMAIN INSTALLED UNTIL THE COMPLETION OF THE PROJECT OR WHEN NO ROADWAY HAZARDS REMAIN WITHIN THE WORK ZONE.

15. LANE AND SHOULDER CLOSURES ALONG I-55 WILL NOT BE PERMITTED.

16. LANE AND SHOULDER CLOSURES ALONG I-355 AND THE I-355/I-80 RAMPS WILL NOT BE PERMITTED.

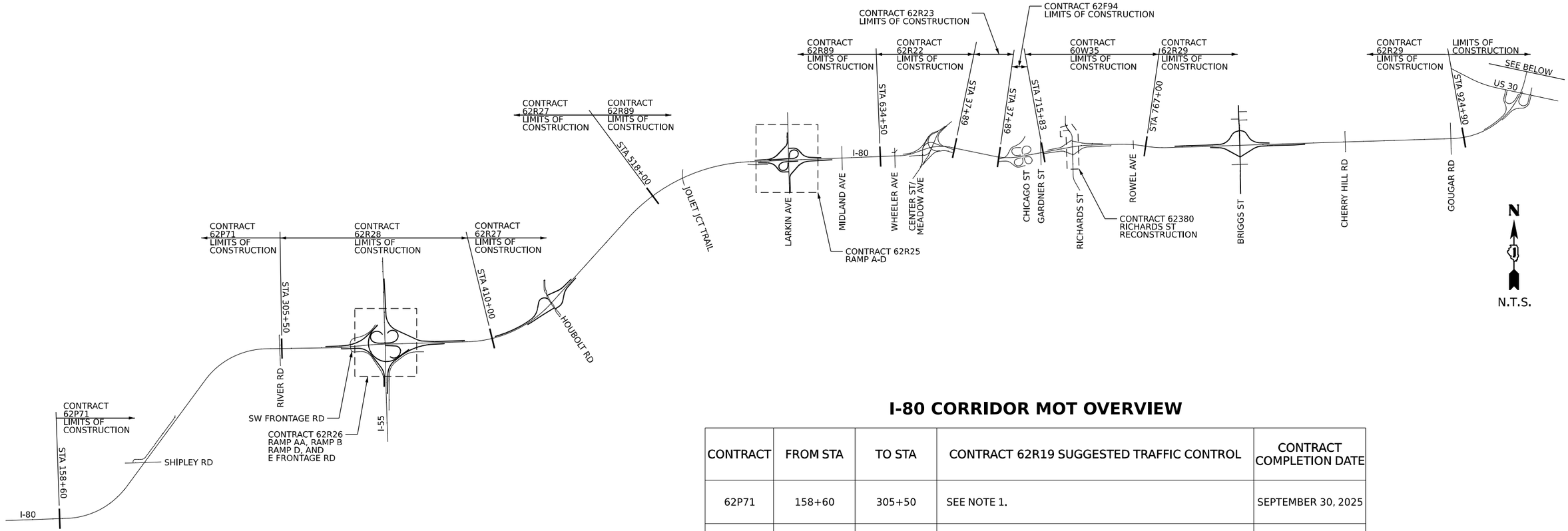

I-80 CORRIDOR MOT OVERVIEW

CONTRACT	FROM STA	TO STA	CONTRACT 62R19 SUGGESTED TRAFFIC CONTROL	CONTRACT COMPLETION DATE
62P71	158+60	305+50	SEE NOTE 1.	SEPTEMBER 30, 2025
62R28	305+50	410+00	SEE NOTE 1.	OCTOBER 30, 2026
62R26	I-55 INTERCHANGE - RAMP AA, RAMP B, RAMP D AND E. FRONTAGE RD		SEE NOTE 1.	OCTOBER 30, 2026
62R27	410+00	518+00	SEE NOTE 1.	OCTOBER 30, 2026
62R89	518+00	634+50	SEE NOTE 1.	OCTOBER 30, 2026
62R25	LARKIN INTERCHANGE RAMPS A-D		SEE NOTE 1.	NOVEMBER 7, 2025
60W35	715+83	780+22	SEE NOTE 1.	AUGUST 30, 2024
62380	RICHARDS STREET & RAMPS A-D		SEE NOTE 1.	SEPTEMBER 30, 2025
62R29	780+22	924+90	SEE NOTE 1.	JUNE 30, 2026
NONE	924+90	1832+10	SEE NOTE 1.	NOT APPLICABLE

NOTES:
1. THE CONTRACTOR SHALL UTILIZE HIGHWAY STANDARDS AND DISTRICT ONE DETAILS FOR TRAFFIC CONTROL AND PROTECTION.

MODEL: 2D SHEET H
FILE NAME: C:\TRANSYSTEMS\PW_LOCAL\TRANSYSTEMS-PW-01\DMS31452\62R19-SHT-STAGING-100.DGN

exp.

USER NAME = SALASL	DESIGNED - CMA	REVISED -	
	DRAWN - CMA	REVISED -	
PLOT SCALE = 0.16666667 ' / IN.	CHECKED - TMH	REVISED -	
PLOT DATE = 11/12/2025	DATE - 11/12/2025	REVISED -	

STATE OF ILLINOIS
DEPARTMENT OF TRANSPORTATION

I-80
MAINTENANCE OF TRAFFIC OVERVIEW

SCALE: N.T.S. | SHEET OF SHEETS | STA. TO STA.

F.A.I. RTE.	SECTION	COUNTY	TOTAL SHEETS	SHEET NO.
80	FAI 80 21 VLS	VARIOUS	467	49
		CONTRACT NO. 62R19		
		ILLINOIS	FED. AID PROJECT	

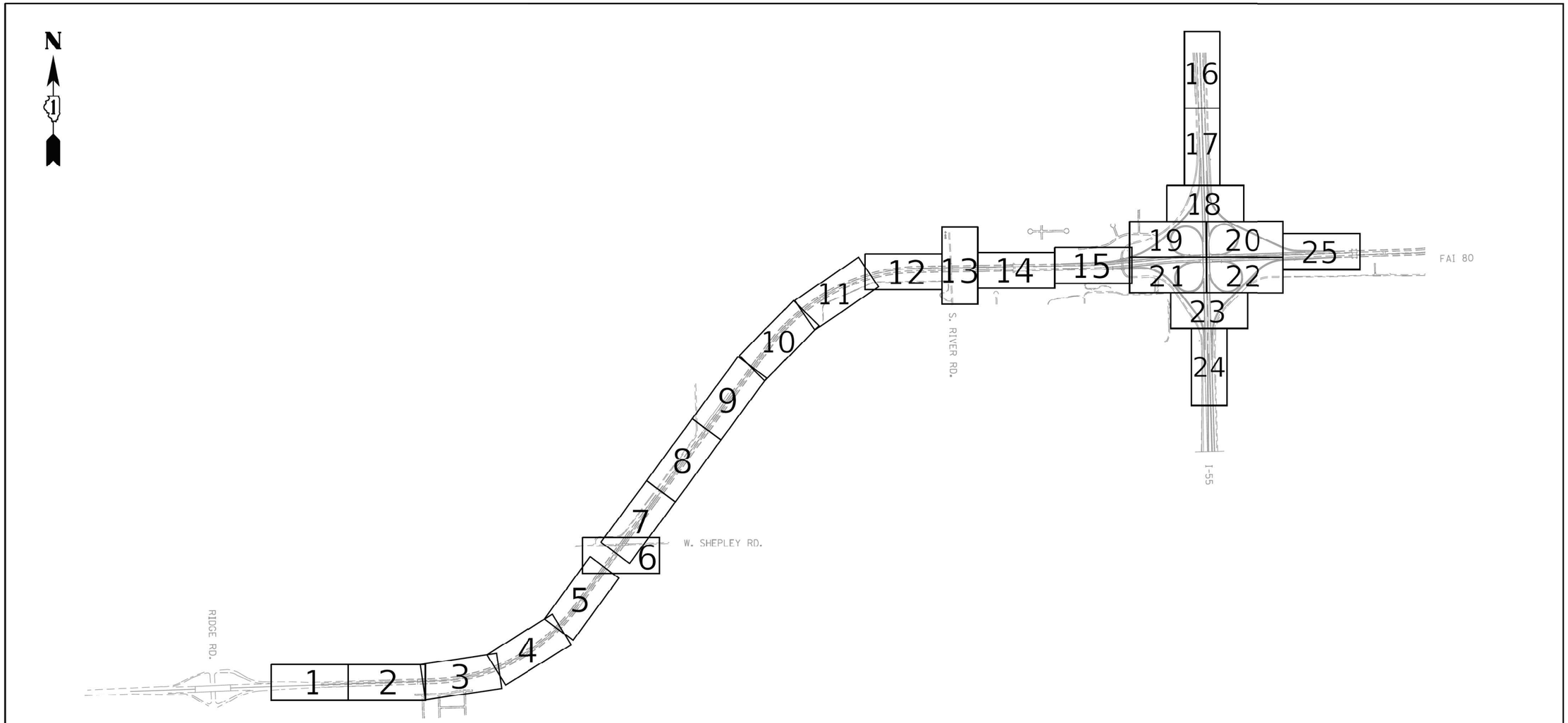

ASCE STANDARDS OF DEPICTION OF SUBSURFACE UTILITIES

QUALITY LEVEL A (QLA)
PRECISE HORIZONTAL AND VERTICAL LOCATION OF UTILITIES OBTAINED BY THE ACTUAL EXPOSURE (OR VERIFICATION OF PREVIOUSLY EXPOSED AND SURVEYED UTILITIES) USING MINIMALLY INTRUSIVE EXCAVATION EQUIPMENT TO MINIMIZE POTENTIAL FOR UTILITY DAMAGE, AND SUBSEQUENT MEASUREMENT OF THE SUBSURFACE UTILITIES WITH OTHER UTILITY ATTRIBUTES SUCH AS TYPE, SIZE & MATERIAL OF UTILITY.

QUALITY LEVEL B (QLB)
INFORMATION OBTAINED THROUGH THE APPLICATION OF APPROPRIATE SURFACE GEOPHYSICAL METHODS TO DETERMINE THE EXISTENCE AND APPROXIMATE HORIZONTAL POSITION OF SUBSURFACE UTILITIES. QUALITY LEVEL B DATA SHOULD BE REPRODUCIBLE BY SURFACE GEOPHYSICS AT ANY POINT OF THEIR DEPICTION. THIS INFORMATION IS SURVEYED TO APPLICABLE TOLERANCES DEFINED BY THE PROJECT AND REDUCED ONTO PLAN DOCUMENTS.

QUALITY LEVEL C (QLC)
INFORMATION OBTAINED BY SURVEYING AND PLOTTING VISIBLE ABOVE-GROUND UTILITY FEATURES AND BY USING PROFESSIONAL JUDGEMENT IN CORRELATING THIS INFORMATION TO QUALITY LEVEL D INFORMATION.

QUALITY LEVEL D (QLD)
INFORMATION DERIVED FROM EXISTING RECORDS OR ORAL RECOLLECTIONS.

GENERAL NOTES:

WGI INC. HAS EXERCISED ITS BEST PROFESSIONAL EXPERTISE AND GEOPHYSICAL PROSPECTING TECHNIQUES TO DEVELOP THIS MAPPING OF SUBSURFACE UTILITIES WITHIN THE PROJECT LIMITS.

WGI INC. DOES NOT GUARANTEE THAT UTILITIES SHOWN COMPRISE ALL UTILITIES WITHIN THE PROJECT AREA.

WGI's SUE QLB INVESTIGATION WAS PERFORMED 01/06/2019 THROUGH 02/14/2020. SUE QLA INVESTIGATION WAS PERFORMED 11/02/2021 THROUGH 11/12/2021. CHANGES TO UTILITIES AFTER THESE DATES MAY HAVE BEEN MADE AND THEREFORE MAY RESULT IN VARIANCES FROM THIS PLAN IF DEEMED ADVISABLE PRIOR TO FINAL DESIGN AND CONSTRUCTION.

UNLESS OTHERWISE NOTED, FIELD LOCATED UTILITIES MEET THE CI/ASCE 38-2 DEFINITION FOR QUALITY LEVEL "A" (QLA) AND QUALITY LEVEL "B" (QLB) STANDARDS.

WGI INC. DISCLAIMER: WGI RECOMMENDS SUE QUALITY LEVEL "A" AT ANY LOCATION WHERE A MORE ACCURATE DEPICTION OF THE UTILITY IS REQUIRED BY IDOT.

UTILITY LEGEND:

- A — AERIAL
- UNKNOWN UTILITY
- O — OIL (PETROLEUM)
- CTV — CABLE TV
- T — TELEPHONE
- FO — FIBER OPTIC
- G — GAS
- E — ELECTRIC
- E — TRAFFIC SIGNAL/LIGHTING
- W — WATER
- SANITARY SEWER
- S — STORM SEWER
- TEST HOLE
- ED — ELECTRONIC DEPTH

JOHN J. BELLIS
062-044796
REGISTERED PROFESSIONAL ENGINEER OF ILLINOIS

John J Bellis
signature

12/14/2021
date

license expires 02/28/2022

AMERICAN SURVEYING & ENGINEERING, P.C.
American Surveying & Engineering, P.C.
30 N. LaSalle St., Suite 3440
Chicago, IL 60602
Phone No. (312) 277-2000

Accurate GROUP, INC.
Accurate Group, Inc.
101 Schekter Road, Suite 200b
Lincolnshire, IL 60069
Phone No. (847) 613-1100

WGI
2001 Butterfield Road, Suite 410
Downers Grove, IL 60515
Phone No. (630) 307-3800
Fax No. (630) 307-7030
Cert No. 6091 - LB No. 7055

USER NAME = Erick.Maleza	DESIGNED -	REVISED -	
	DRAWN - EM	REVISED -	
PLOT SCALE = 100.0000 ' / in.	CHECKED - EG	REVISED -	
PLOT DATE = 12/10/2021	DATE -	REVISED -	

STATE OF ILLINOIS
DEPARTMENT OF TRANSPORTATION

I-80 FROM RIDGE RD. TO ROCK RUN CREEK
JOLIET, ILLINOIS

SCALE: | SHEET OF SHEETS | STA. TO STA.

F.A. RTE.	SECTION	COUNTY	TOTAL SHEETS	SHEET NO.
		WILL		
		CONTRACT NO. 62N31		
		ILLINOIS	FED. AID PROJECT	

IDOT W.O. 211 & 502

MODEL: 2D SHEET H
FILE NAME: C:\TRANSYSTEMS\PW_LOCAL\TRANSYSTEMS-PW-01\DMS31451\62R19-SHT-SUE-01.DGN

exp.

USER NAME = SALASL	DESIGNED - CMA	REVISED -	
	DRAWN - CMA	REVISED -	
PLOT SCALE = 0.16666667 ' / IN.	CHECKED - BRH	REVISED -	
PLOT DATE = 11/12/2025	DATE - 11/12/2025	REVISED -	

STATE OF ILLINOIS
DEPARTMENT OF TRANSPORTATION

I-80
SUE UTILITIES

SCALE: NTS | SHEET OF SHEETS | STA. TO STA.

F.A.I. RTE.	SECTION	COUNTY	TOTAL SHEETS	SHEET NO.
80	FAI 80 21 VLS	VARIOUS	467	50
		CONTRACT NO. 62R19		
		ILLINOIS	FED. AID PROJECT	

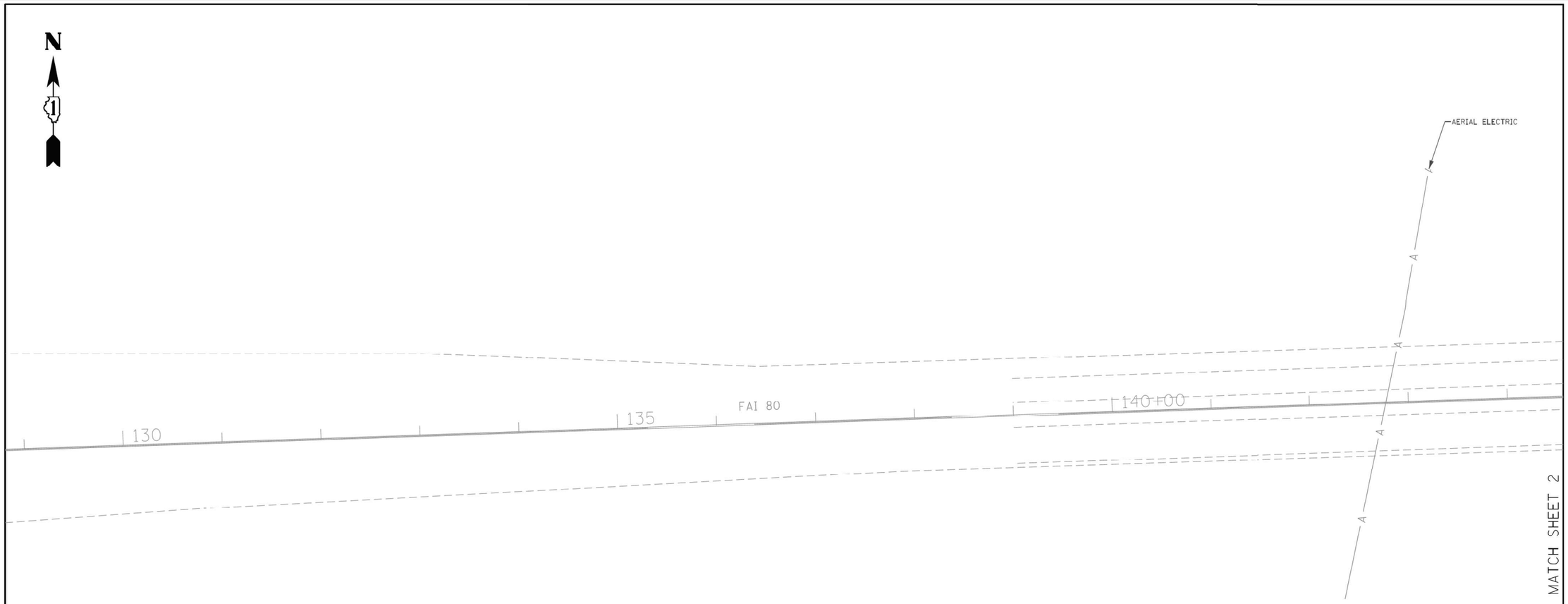

ASCE STANDARDS OF DEPICTION OF SUBSURFACE UTILITIES

QUALITY LEVEL A (QLA)
PRECISE HORIZONTAL AND VERTICAL LOCATION OF UTILITIES OBTAINED BY THE ACTUAL EXPOSURE (OR VERIFICATION OF PREVIOUSLY EXPOSED AND SURVEYED UTILITIES) USING MINIMALLY INTRUSIVE EXCAVATION EQUIPMENT TO MINIMIZE POTENTIAL FOR UTILITY DAMAGE, AND SUBSEQUENT MEASUREMENT OF THE SUBSURFACE UTILITIES WITH OTHER UTILITY ATTRIBUTES SUCH AS TYPE, SIZE & MATERIAL OF UTILITY.

QUALITY LEVEL B (QLB)
INFORMATION OBTAINED THROUGH THE APPLICATION OF APPROPRIATE SURFACE GEOPHYSICAL METHODS TO DETERMINE THE EXISTENCE AND APPROXIMATE HORIZONTAL POSITION OF SUBSURFACE UTILITIES. QUALITY LEVEL B DATA SHOULD BE REPRODUCIBLE BY SURFACE GEOPHYSICS AT ANY POINT OF THEIR DEPICTION. THIS INFORMATION IS SURVEYED TO APPLICABLE TOLERANCES DEFINED BY THE PROJECT AND REDUCED ONTO PLAN DOCUMENTS.

QUALITY LEVEL C (QLC)
INFORMATION OBTAINED BY SURVEYING AND PLOTTING VISIBLE ABOVE-GROUND UTLITY FEATURES AND BY USING PROFESSIONAL JUDGEMENT IN CORRELATING THIS INFORMATION TO QUALITY LEVEL D INFORMATION.

QUALITY LEVEL D (QLD)
INFORMATION DERIVED FROM EXISTING RECORDS OR ORAL RECOLLECTIONS.

GENERAL NOTES:

WGI INC. HAS EXERCISED ITS BEST PROFESSIONAL EXPERTISE AND GEOPHYSICAL PROSPECTING TECHNIQUES TO DEVELOP THIS MAPPING OF SUBSURFACE UTILITIES WITHIN THE PROJECT LIMITS.

WGI INC. DOES NOT GUARANTEE THAT UTILITIES SHOWN COMPRISE ALL UTILITIES WITHIN THE PROJECT AREA.

WGI's SUE QLB INVESTIGATION WAS PERFORMED 01/06/2019 THROUGH 02/14/2020. SUE QLA INVESTIGATION WAS PERFORMED 11/02/2021 THROUGH 11/12/2021. CHANGES TO UTILITIES AFTER THESE DATES MAY HAVE BEEN MADE AND THEREFORE MAY RESULT IN VARIANCES FROM THIS PLAN IF DEEMED ADVISABLE PRIOR TO FINAL DESIGN AND CONSTRUCTION.

UNLESS OTHERWISE NOTED, FIELD LOCATED UTILITIES MEET THE CI/ASCE 38-2 DEFINITION FOR QUALITY LEVEL "A" (QLA) AND QUALITY LEVEL "B" (QLB) STANDARDS.

WGI INC. DISCLAIMER: WGI RECOMMENDS SUE QUALITY LEVEL "A" AT ANY LOCATION WHERE A MORE ACCURATE DEPICTION OF THE UTILITY IS REQUIRED BY IDOT.

UTILITY LEGEND:

- A — AERIAL
- UNKNOWN UTILITY
- O — OIL (PETROLEUM)
- CTV — CABLE TV
- T — TELEPHONE
- FO — FIBER OPTIC
- G — GAS
- E — ELECTRIC
- E — TRAFFIC SIGNAL/LIGHTING
- W — WATER
- SANITARY SEWER
- S — STORM SEWER
- TEST HOLE
- ED — ELECTRONIC DEPTH

JOHN J. BELLIS
062-044796
REGISTERED PROFESSIONAL ENGINEER OF ILLINOIS

John J Bellis
signature

12/14/2021
date

license expires 02/28/2022

AMERICAN SURVEYING & ENGINEERING, P.C.
American Surveying & Engineering, P.C.
30 N. LaSalle St., Suite 3440
Chicago, IL 60602
Phone No. (312) 277-2000

Accurate GROUP, INC.
Accurate Group, Inc.
101 Schekter Road, Suite 200b
Lincolnshire, IL 60069
Phone No. (847) 613-1100

WGI
2001 Butterfield Road, Suite 410
Downers Grove, IL 60515
Phone No. (630) 307-3800
Fax No. (630) 307-7030
Cert No. 6091 - LB No. 7055

USER NAME = Erick.Maleza	DESIGNED -	REVISED -	
	DRAWN - EM	REVISED -	
PLOT SCALE = 100.0000 ' / in.	CHECKED - EG	REVISED -	
PLOT DATE = 12/10/2021	DATE -	REVISED -	

STATE OF ILLINOIS
DEPARTMENT OF TRANSPORTATION

I-80 FROM RIDGE RD. TO ROCK RUN CREEK
JOLIET, ILLINOIS

SCALE: | SHEET 1 OF 25 SHEETS | STA. | TO STA.

F.A. RTE.	SECTION	COUNTY	TOTAL SHEETS	SHEET NO.
		WILL	25	1
		CONTRACT NO. 62N31		
	ILLINOIS	FED. AID PROJECT		

IDOT W.O. 211 & 502

exp.

USER NAME = SALASL	DESIGNED - CMA	REVISED -	
	DRAWN - CMA	REVISED -	
PLOT SCALE = 0.16666667 ' / IN.	CHECKED - BRH	REVISED -	
PLOT DATE = 11/12/2025	DATE - 11/12/2025	REVISED -	

STATE OF ILLINOIS
DEPARTMENT OF TRANSPORTATION

I-80
SUE UTILITIES

SCALE: NTS | SHEET OF SHEETS | STA. | TO STA.

F.A.I. RTE.	SECTION	COUNTY	TOTAL SHEETS	SHEET NO.
80	FAI 80 21 VLS	VARIOUS	467	51
		CONTRACT NO. 62R19		
	ILLINOIS	FED. AID PROJECT		

MODE: 2D SHEET H
FILE NAME: C:\TRANSYSTEMS\PW_LOCAL\TRANSYSTEMS-PW-01\DMS31451\62R19-SHT-SUE-02.DGN

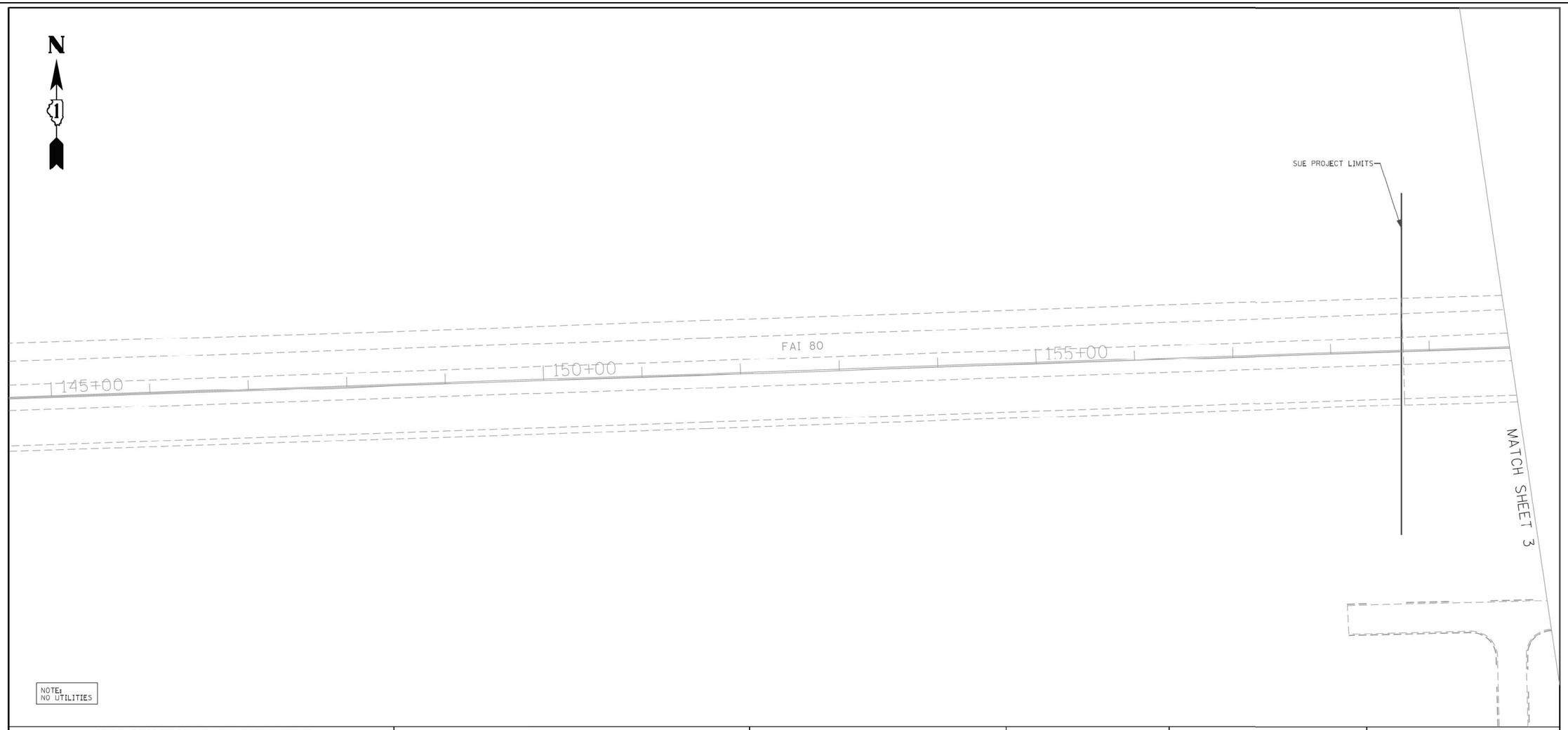

NOTE:
NO UTILITIES

ASCE STANDARDS OF DEPICTION OF SUBSURFACE UTILITIES

QUALITY LEVEL A (QLA)
PRECISE HORIZONTAL AND VERTICAL LOCATION OF UTILITIES OBTAINED BY THE ACTUAL EXPOSURE (OR VERIFICATION OF PREVIOUSLY EXPOSED AND SURVEYED UTILITIES) USING MINIMALLY INTRUSIVE EXCAVATION EQUIPMENT TO MINIMIZE POTENTIAL FOR UTILITY DAMAGE, AND SUBSEQUENT MEASUREMENT OF THE SUBSURFACE UTILITIES WITH OTHER UTILITY ATTRIBUTES SUCH AS TYPE, SIZE & MATERIAL OF UTILITY.

QUALITY LEVEL B (QLB)
INFORMATION OBTAINED THROUGH THE APPLICATION OF APPROPRIATE SURFACE GEOPHYSICAL METHODS TO DETERMINE THE EXISTENCE AND APPROXIMATE HORIZONTAL POSITION OF SUBSURFACE UTILITIES. QUALITY LEVEL B DATA SHOULD BE REPRODUCIBLE BY SURFACE GEOPHYSICS AT ANY POINT OF THEIR DEPICTION. THIS INFORMATION IS SURVEYED TO APPLICABLE TOLERANCES DEFINED BY THE PROJECT AND REDUCED ONTO PLAN DOCUMENTS.

QUALITY LEVEL C (QLC)
INFORMATION OBTAINED BY SURVEYING AND PLOTTING VISIBLE ABOVE-GROUND UTLITY FEATURES AND BY USING PROFESSIONAL JUDGEMENT IN CORRELATING THIS INFORMATION TO QUALITY LEVEL D INFORMATION.

QUALITY LEVEL D (QLD)
INFORMATION DERIVED FROM EXISTING RECORDS OR ORAL RECOLLECTIONS.

GENERAL NOTES:

WGI INC. HAS EXERCISED ITS BEST PROFESSIONAL EXPERTISE AND GEOPHYSICAL PROSPECTING TECHNIQUES TO DEVELOP THIS MAPPING OF SUBSURFACE UTILITIES WITHIN THE PROJECT LIMITS.

WGI INC. DOES NOT GUARANTEE THAT UTILITIES SHOWN COMPRISE ALL UTILITIES WITHIN THE PROJECT AREA.

WGI's SUE QLB INVESTIGATION WAS PERFORMED 01/06/2019 THROUGH 02/14/2020. SUE QLA INVESTIGATION WAS PERFORMED 11/02/2021 THROUGH 11/12/2021. CHANGES TO UTILITIES AFTER THESE DATES MAY HAVE BEEN MADE AND THEREFORE MAY RESULT IN VARIANCES FROM THIS PLAN IF DEEMED ADVISABLE PRIOR TO FINAL DESIGN AND CONSTRUCTION.

UNLESS OTHERWISE NOTED, FIELD LOCATED UTILITIES MEET THE CI/ASCE 38-2 DEFINITION FOR QUALITY LEVEL "A" (QLA) AND QUALITY LEVEL "B" (QLB) STANDARDS.

WGI INC. DISCLAIMER: WGI RECOMMENDS SUE QUALITY LEVEL "A" AT ANY LOCATION WHERE A MORE ACCURATE DEPICTION OF THE UTILITY IS REQUIRED BY IDOT.

UTILITY LEGEND:

- A — *AERIAL*
- *UNKNOWN UTILITY*
- O — *OIL (PETROLEUM)*
- CTV — *CABLE TV*
- T — *TELEPHONE*
- FO — *FIBER OPTIC*
- G — *GAS*
- E — *ELECTRIC*
- E — *TRAFFIC SIGNAL/LIGHTING*
- W — *WATER*
- *SANITARY SEWER*
- *STORM SEWER*
- *TEST HOLE*
- ED — *ELECTRONIC DEPTH*

JOHN J. BELLIS
062-044796
REGISTERED PROFESSIONAL ENGINEER OF ILLINOIS

John J Bellis
signature

12/14/2021
date

license expires 02/28/2022

AMERICAN SURVEYING & ENGINEERING, P.C.
American Surveying & Engineering, P.C.
30 N. LaSalle St., Suite 3440
Chicago, IL 60602
Phone No. (312) 277-2000

Accurate GROUP, INC.
Accurate Group, Inc.
101 Schekter Road, Suite 200b
Lincolnshire, IL 60069
Phone No. (847) 613-1100

WGI
2001 Butterfield Road, Suite 410
Downers Grove, IL 60515
Phone No. (630) 307-3800
Fax No. (630) 307-7030
Cert No. 6091 - LB No. 7055

USER NAME = Erick.Maleza	DESIGNED -	REVISED -	
	DRAWN - EM	REVISED -	
PLOT SCALE = 100.0000 ' / in.	CHECKED - EG	REVISED -	
PLOT DATE = 12/10/2021	DATE -	REVISED -	

STATE OF ILLINOIS
DEPARTMENT OF TRANSPORTATION

I-80 FROM RIDGE RD. TO ROCK RUN CREEK
JOLIET, ILLINOIS

SCALE: | SHEET 2 OF 25 SHEETS | STA. | TO STA.

F.A. RTE.	SECTION	COUNTY	TOTAL SHEETS	SHEET NO.
		WILL	25	2
		CONTRACT NO. 62N31		
		ILLINOIS	FED. AID PROJECT	

IDOT W.O. 211 & 502

exp.

USER NAME = SALASL	DESIGNED - CMA	REVISED -	
	DRAWN - CMA	REVISED -	
PLOT SCALE = 0.16666667 ' / IN.	CHECKED - BRH	REVISED -	
PLOT DATE = 11/12/2025	DATE - 11/12/2025	REVISED -	

STATE OF ILLINOIS
DEPARTMENT OF TRANSPORTATION

I-80
SUE UTILITIES

SCALE: NTS | SHEET OF SHEETS | STA. | TO STA.

F.A.I. RTE.	SECTION	COUNTY	TOTAL SHEETS	SHEET NO.
80	FAI 80 21 VLS	VARIOUS	467	52
		CONTRACT NO. 62R19		
		ILLINOIS	FED. AID PROJECT	

MODEL: 2D SHEET H
FILE NAME: C:\TRANSYSTEMS\PW_LOCAL\TRANSYSTEMS-PW-01\DMS31451\62R19-SHT-SUE-03.DGN

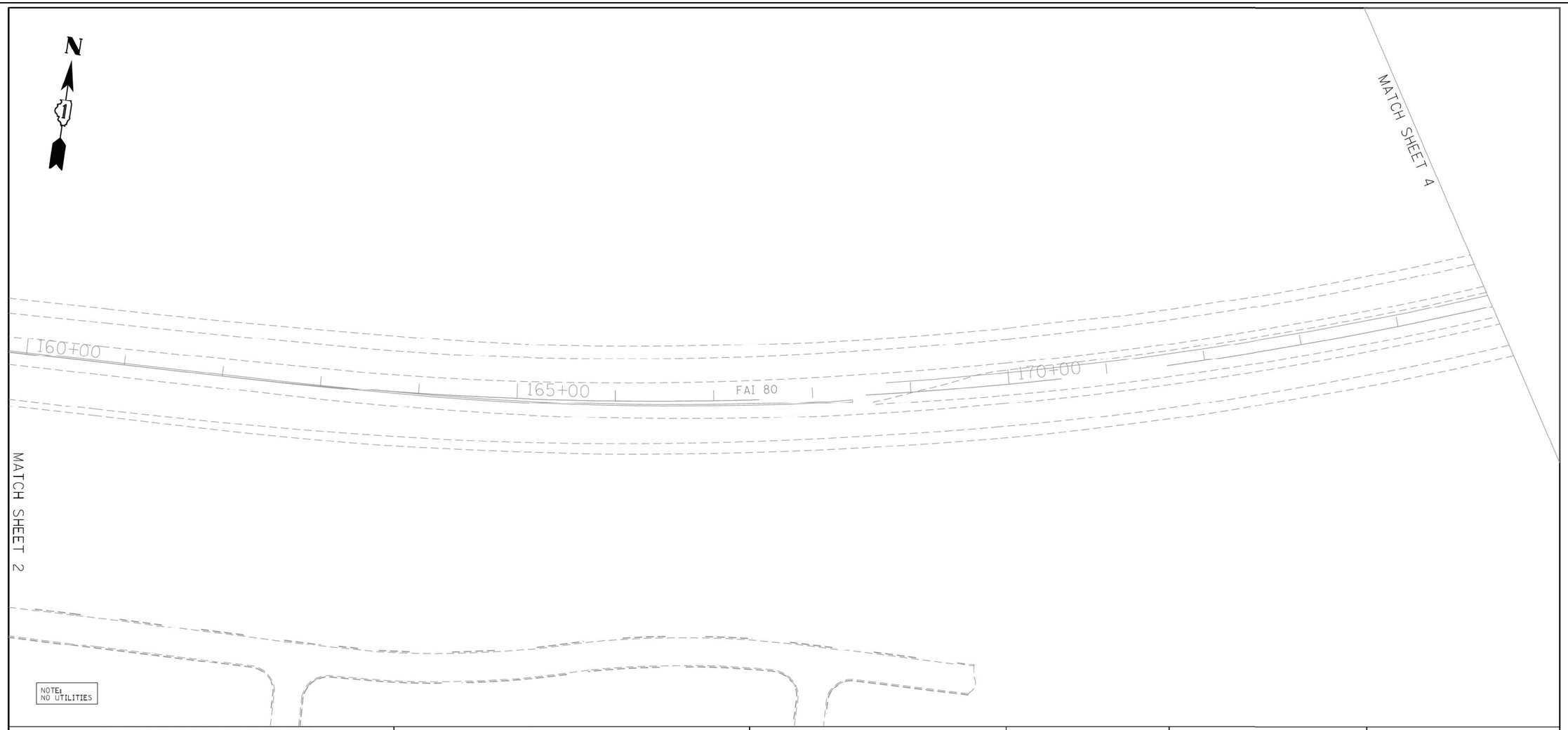

ASCE STANDARDS OF DEPICTION OF SUBSURFACE UTILITIES

QUALITY LEVEL A (QLA)
PRECISE HORIZONTAL AND VERTICAL LOCATION OF UTILITIES OBTAINED BY THE ACTUAL EXPOSURE (OR VERIFICATION OF PREVIOUSLY EXPOSED AND SURVEYED UTILITIES) USING MINIMALLY INTRUSIVE EXCAVATION EQUIPMENT TO MINIMIZE POTENTIAL FOR UTILITY DAMAGE, AND SUBSEQUENT MEASUREMENT OF THE SUBSURFACE UTILITIES WITH OTHER UTILITY ATTRIBUTES SUCH AS TYPE, SIZE & MATERIAL OF UTILITY.

QUALITY LEVEL B (QLB)
INFORMATION OBTAINED THROUGH THE APPLICATION OF APPROPRIATE SURFACE GEOPHYSICAL METHODS TO DETERMINE THE EXISTENCE AND APPROXIMATE HORIZONTAL POSITION OF SUBSURFACE UTILITIES. QUALITY LEVEL B DATA SHOULD BE REPRODUCIBLE BY SURFACE GEOPHYSICS AT ANY POINT OF THEIR DEPICTION. THIS INFORMATION IS SURVEYED TO APPLICABLE TOLERANCES DEFINED BY THE PROJECT AND REDUCED ONTO PLAN DOCUMENTS.

QUALITY LEVEL C (QLC)
INFORMATION OBTAINED BY SURVEYING AND PLOTTING VISIBLE ABOVE-GROUND UTLITY FEATURES AND BY USING PROFESSIONAL JUDGEMENT IN CORRELATING THIS INFORMATION TO QUALITY LEVEL D INFORMATION.

QUALITY LEVEL D (QLD)
INFORMATION DERIVED FROM EXISTING RECORDS OR ORAL RECOLLECTIONS.

GENERAL NOTES:

WGI INC. HAS EXERCISED ITS BEST PROFESSIONAL EXPERTISE AND GEOPHYSICAL PROSPECTING TECHNIQUES TO DEVELOP THIS MAPPING OF SUBSURFACE UTILITIES WITHIN THE PROJECT LIMITS.

WGI INC. DOES NOT GUARANTEE THAT UTILITIES SHOWN COMPRISE ALL UTILITIES WITHIN THE PROJECT AREA.

WGI's SUE QLB INVESTIGATION WAS PERFORMED 01/06/2019 THROUGH 02/14/2020. SUE QLA INVESTIGATION WAS PERFORMED 11/02/2021 THROUGH 11/12/2021. CHANGES TO UTILITIES AFTER THESE DATES MAY HAVE BEEN MADE AND THEREFORE MAY RESULT IN VARIANCES FROM THIS PLAN IF DEEMED ADVISABLE PRIOR TO FINAL DESIGN AND CONSTRUCTION.

UNLESS OTHERWISE NOTED, FIELD LOCATED UTILITIES MEET THE CI/ASCE 38-2 DEFINITION FOR QUALITY LEVEL "A" (QLA) AND QUALITY LEVEL "B" (QLB) STANDARDS.

WGI INC. DISCLAIMER: WGI RECOMMENDS SUE QUALITY LEVEL "A" AT ANY LOCATION WHERE A MORE ACCURATE DEPICTION OF THE UTILITY IS REQUIRED BY IDOT.

UTILITY LEGEND:

- A — AERIAL
- UNKNOWN UTILITY
- O — OIL (PETROLEUM)
- CTV — CABLE TV
- T — TELEPHONE
- FO — FIBER OPTIC
- G — GAS
- E — ELECTRIC
- E — TRAFFIC SIGNAL/LIGHTING
- W — WATER
- SANITARY SEWER
- S — STORM SEWER
- TEST HOLE
- ED — ELECTRONIC DEPTH

JOHN J. BELLIS
062-044796
REGISTERED PROFESSIONAL ENGINEER OF ILLINOIS

John J Bellis
signature

12/14/2021
date

license expires 02/28/2022

AMERICAN SURVEYING & ENGINEERING, P.C.
American Surveying & Engineering, P.C.
30 N. LaSalle St., Suite 3440
Chicago, IL 60602
Phone No. (312) 277-2000

Accurate GROUP, INC.
Accurate Group, Inc.
101 Schekter Road, Suite 200b
Lincolnshire, IL 60069
Phone No. (847) 613-1100

WGI
2001 Butterfield Road, Suite 410
Downers Grove, IL 60515
Phone No. (630) 307-3800
Fax No. (630) 307-7030
Cert No. 6091 - LB No. 7055

USER NAME = Erick.Maleza	DESIGNED -	REVISED -	
	DRAWN - EM	REVISED -	
PLOT SCALE = 100.0000 ' / in.	CHECKED - EG	REVISED -	
PLOT DATE = 12/10/2021	DATE -	REVISED -	

STATE OF ILLINOIS
DEPARTMENT OF TRANSPORTATION

I-80 FROM RIDGE RD. TO ROCK RUN CREEK
JOLIET, ILLINOIS

SCALE: | SHEET 3 OF 25 SHEETS | STA. | TO STA.

F.A. RTE.	SECTION	COUNTY	TOTAL SHEETS	SHEET NO.
		WILL	25	3
		CONTRACT NO. 62N31		
	ILLINOIS	FED. AID PROJECT		

IDOT W.O. 211 & 502

exp.

USER NAME = SALASL	DESIGNED - CMA	REVISED -	
	DRAWN - CMA	REVISED -	
PLOT SCALE = 0.16666667 ' / IN.	CHECKED - BRH	REVISED -	
PLOT DATE = 11/12/2025	DATE - 11/12/2025	REVISED -	

STATE OF ILLINOIS
DEPARTMENT OF TRANSPORTATION

I-80
SUE UTILITIES

SCALE: NTS | SHEET OF SHEETS | STA. | TO STA.

F.A.I. RTE.	SECTION	COUNTY	TOTAL SHEETS	SHEET NO.
80	FAI 80 21 VLS	VARIOUS	467	53
		CONTRACT NO. 62R19		
	ILLINOIS	FED. AID PROJECT		

MODEL: 2D SHEET H
FILE NAME: C:\TRANSYSTEMS\PW_LOCAL\TRANSYSTEMS-PW-01\DMS31451\62R19-SHT-SUE-04.DGN

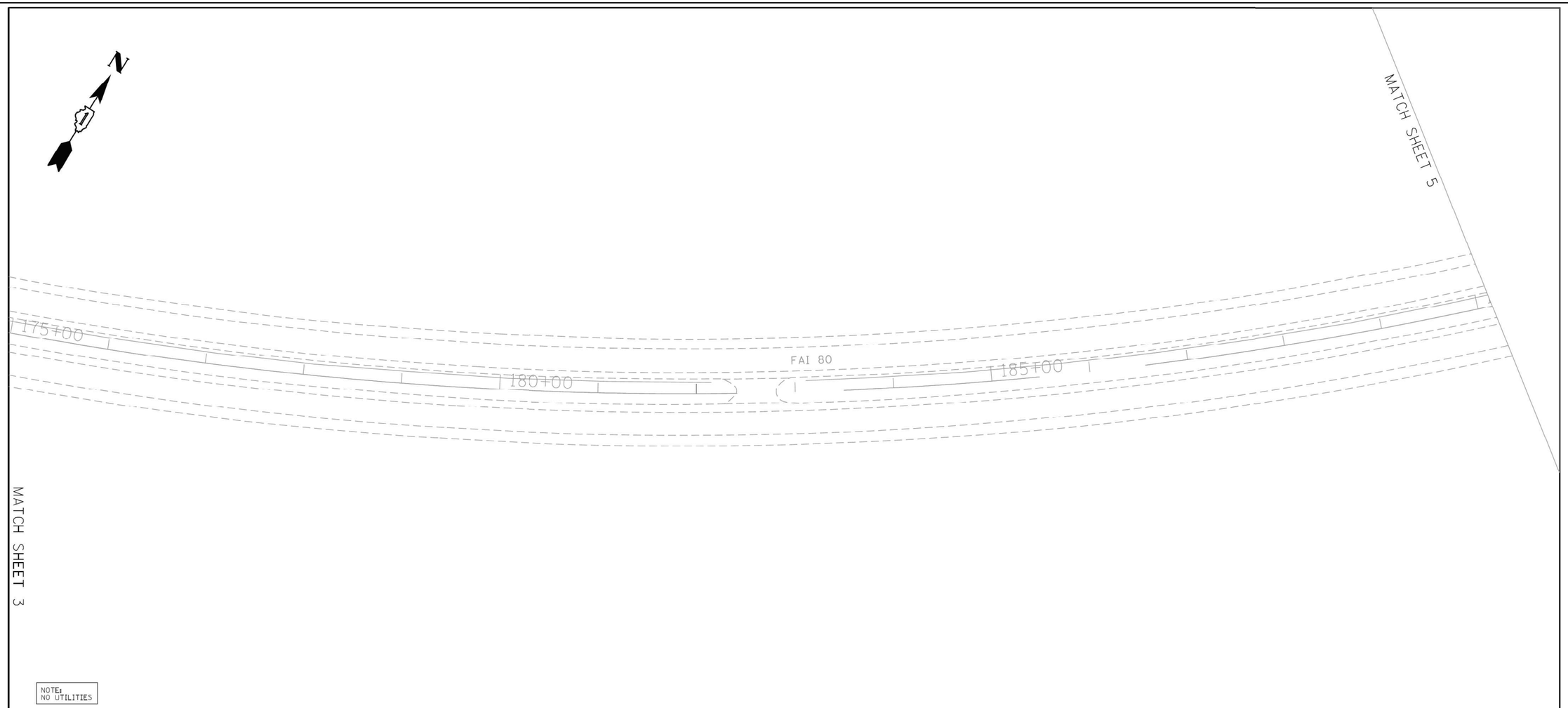

ASCE STANDARDS OF DEPICTION OF SUBSURFACE UTILITIES

QUALITY LEVEL A (QLA)
PRECISE HORIZONTAL AND VERTICAL LOCATION OF UTILITIES OBTAINED BY THE ACTUAL EXPOSURE (OR VERIFICATION OF PREVIOUSLY EXPOSED AND SURVEYED UTILITIES) USING MINIMALLY INTRUSIVE EXCAVATION EQUIPMENT TO MINIMIZE POTENTIAL FOR UTILITY DAMAGE, AND SUBSEQUENT MEASUREMENT OF THE SUBSURFACE UTILITIES WITH OTHER UTILITY ATTRIBUTES SUCH AS TYPE, SIZE & MATERIAL OF UTILITY.

QUALITY LEVEL B (QLB)
INFORMATION OBTAINED THROUGH THE APPLICATION OF APPROPRIATE SURFACE GEOPHYSICAL METHODS TO DETERMINE THE EXISTENCE AND APPROXIMATE HORIZONTAL POSITION OF SUBSURFACE UTILITIES. QUALITY LEVEL B DATA SHOULD BE REPRODUCIBLE BY SURFACE GEOPHYSICS AT ANY POINT OF THEIR DEPICTION. THIS INFORMATION IS SURVEYED TO APPLICABLE TOLERANCES DEFINED BY THE PROJECT AND REDUCED ONTO PLAN DOCUMENTS.

QUALITY LEVEL C (QLC)
INFORMATION OBTAINED BY SURVEYING AND PLOTTING VISIBLE ABOVE-GROUND UTLITY FEATURES AND BY USING PROFESSIONAL JUDGEMENT IN CORRELATING THIS INFORMATION TO QUALITY LEVEL D INFORMATION.

QUALITY LEVEL D (QLD)
INFORMATION DERIVED FROM EXISTING RECORDS OR ORAL RECOLLECTIONS.

GENERAL NOTES:

WGI INC. HAS EXERCISED ITS BEST PROFESSIONAL EXPERTISE AND GEOPHYSICAL PROSPECTING TECHNIQUES TO DEVELOP THIS MAPPING OF SUBSURFACE UTILITIES WITHIN THE PROJECT LIMITS.

WGI INC. DOES NOT GUARANTEE THAT UTILITIES SHOWN COMPRISE ALL UTILITIES WITHIN THE PROJECT AREA.

WGI's SUE QLB INVESTIGATION WAS PERFORMED 01/06/2019 THROUGH 02/14/2020. SUE QLA INVESTIGATION WAS PERFORMED 11/02/2021 THROUGH 11/12/2021. CHANGES TO UTILITIES AFTER THESE DATES MAY HAVE BEEN MADE AND THEREFORE MAY RESULT IN VARIANCES FROM THIS PLAN IF DEEMED ADVISABLE PRIOR TO FINAL DESIGN AND CONSTRUCTION.

UNLESS OTHERWISE NOTED, FIELD LOCATED UTILITIES MEET THE CI/ASCE 38-2 DEFINITION FOR QUALITY LEVEL "A" (QLA) AND QUALITY LEVEL "B" (QLB) STANDARDS.

WGI INC. DISCLAIMER: WGI RECOMMENDS SUE QUALITY LEVEL "A" AT ANY LOCATION WHERE A MORE ACCURATE DEPICTION OF THE UTILITY IS REQUIRED BY IDOT.

UTILITY LEGEND:

- A — *AERIAL*
- *UNKNOWN UTILITY*
- O — *OIL (PETROLEUM)*
- CTV — *CABLE TV*
- T — *TELEPHONE*
- FO — *FIBER OPTIC*
- G — *GAS*
- E — *ELECTRIC*
- E — *TRAFFIC SIGNAL/LIGHTING*
- W — *WATER*
- *SANITARY SEWER*
- *STORM SEWER*
- *TEST HOLE*
- ED — *ELECTRONIC DEPTH*

JOHN J. BELLIS
062-044796
REGISTERED PROFESSIONAL ENGINEER OF ILLINOIS

John J Bellis
signature

12/14/2021
date

license expires 02/28/2022

AMERICAN SURVEYING & ENGINEERING, P.C.
American Surveying & Engineering, P.C.
30 N. LaSalle St., Suite 3440
Chicago, IL 60602
Phone No. (312) 277-2000

Accurate GROUP, INC.
Accurate Group, Inc.
101 Schekter Road, Suite 200b
Lincolnshire, IL 60069
Phone No. (847) 613-1100

WGI
2001 Butterfield Road, Suite 410
Downers Grove, IL 60515
Phone No. (630) 307-3800
Fax No. (630) 307-7030
Cert No. 6091 - LB No. 7055

USER NAME = Erick.Maleza	DESIGNED -	REVISED -	
	DRAWN - EM	REVISED -	
PLOT SCALE = 100.0000 ' / in.	CHECKED - EG	REVISED -	
PLOT DATE = 12/10/2021	DATE -	REVISED -	

STATE OF ILLINOIS
DEPARTMENT OF TRANSPORTATION

I-80 FROM RIDGE RD. TO ROCK RUN CREEK
JOLIET, ILLINOIS

SCALE: | SHEET 4 OF 25 SHEETS | STA. | TO STA.

F.A. RTE.	SECTION	COUNTY	TOTAL SHEETS	SHEET NO.
		WILL	25	4
		CONTRACT NO. 62N31		
	ILLINOIS	FED. AID PROJECT		

IDOT W.O. 211 & 502

MODEL: 2D SHEET H
FILE NAME: C:\TRANSYSTEMS\PW_LOCAL\TRANSYSTEMS-PW-01\DMS31451\62R19-SHT-SUE-05.DGN

exp.

USER NAME = SALASL	DESIGNED - CMA	REVISED -	
	DRAWN - CMA	REVISED -	
PLOT SCALE = 0.16666667 ' / IN.	CHECKED - BRH	REVISED -	
PLOT DATE = 11/12/2025	DATE - 11/12/2025	REVISED -	

STATE OF ILLINOIS
DEPARTMENT OF TRANSPORTATION

I-80
SUE UTILITIES

SCALE: NTS | SHEET OF SHEETS | STA. | TO STA.

F.A.I. RTE.	SECTION	COUNTY	TOTAL SHEETS	SHEET NO.
80	FAI 80 21 VLS	VARIOUS	467	54
		CONTRACT NO. 62R19		
	ILLINOIS	FED. AID PROJECT		

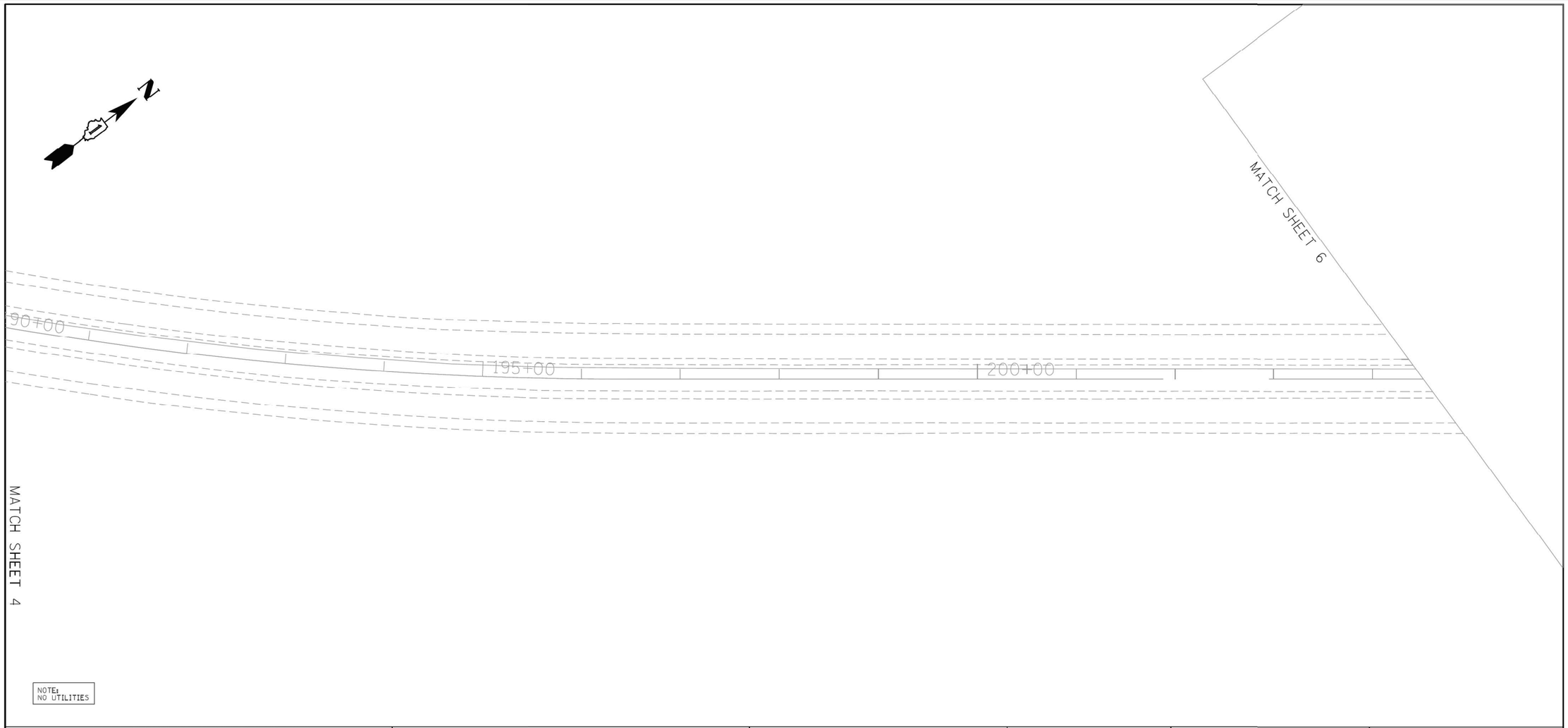

ASCE STANDARDS OF DEPICTION OF SUBSURFACE UTILITIES

QUALITY LEVEL A (QLA)
PRECISE HORIZONTAL AND VERTICAL LOCATION OF UTILITIES OBTAINED BY THE ACTUAL EXPOSURE (OR VERIFICATION OF PREVIOUSLY EXPOSED AND SURVEYED UTILITIES) USING MINIMALLY INTRUSIVE EXCAVATION EQUIPMENT TO MINIMIZE POTENTIAL FOR UTILITY DAMAGE, AND SUBSEQUENT MEASUREMENT OF THE SUBSURFACE UTILITIES WITH OTHER UTILITY ATTRIBUTES SUCH AS TYPE, SIZE & MATERIAL OF UTILITY.

QUALITY LEVEL B (QLB)
INFORMATION OBTAINED THROUGH THE APPLICATION OF APPROPRIATE SURFACE GEOPHYSICAL METHODS TO DETERMINE THE EXISTENCE AND APPROXIMATE HORIZONTAL POSITION OF SUBSURFACE UTILITIES. QUALITY LEVEL B DATA SHOULD BE REPRODUCIBLE BY SURFACE GEOPHYSICS AT ANY POINT OF THEIR DEPICTION. THIS INFORMATION IS SURVEYED TO APPLICABLE TOLERANCES DEFINED BY THE PROJECT AND REDUCED ONTO PLAN DOCUMENTS.

QUALITY LEVEL C (QLC)
INFORMATION OBTAINED BY SURVEYING AND PLOTTING VISIBLE ABOVE-GROUND UTLITY FEATURES AND BY USING PROFESSIONAL JUDGEMENT IN CORRELATING THIS INFORMATION TO QUALITY LEVEL D INFORMATION.

QUALITY LEVEL D (QLD)
INFORMATION DERIVED FROM EXISTING RECORDS OR ORAL RECOLLECTIONS.

GENERAL NOTES:

WGI INC. HAS EXERCISED ITS BEST PROFESSIONAL EXPERTISE AND GEOPHYSICAL PROSPECTING TECHNIQUES TO DEVELOP THIS MAPPING OF SUBSURFACE UTILITIES WITHIN THE PROJECT LIMITS.

WGI INC. DOES NOT GUARANTEE THAT UTILITIES SHOWN COMPRISE ALL UTILITIES WITHIN THE PROJECT AREA.

WGI's SUE QLB INVESTIGATION WAS PERFORMED 01/06/2019 THROUGH 02/14/2020. SUE QLA INVESTIGATION WAS PERFORMED 11/02/2021 THROUGH 11/12/2021. CHANGES TO UTILITIES AFTER THESE DATES MAY HAVE BEEN MADE AND THEREFORE MAY RESULT IN VARIANCES FROM THIS PLAN IF DEEMED ADVISABLE PRIOR TO FINAL DESIGN AND CONSTRUCTION.

UNLESS OTHERWISE NOTED, FIELD LOCATED UTILITIES MEET THE CI/ASCE 38-2 DEFINITION FOR QUALITY LEVEL "A" (QLA) AND QUALITY LEVEL "B" (QLB) STANDARDS.

WGI INC. DISCLAIMER: WGI RECOMMENDS SUE QUALITY LEVEL "A" AT ANY LOCATION WHERE A MORE ACCURATE DEPICTION OF THE UTILITY IS REQUIRED BY IDOT.

UTILITY LEGEND:

- A — AERIAL
- UNKNOWN UTILITY
- O — OIL (PETROLEUM)
- CTV — CABLE TV
- T — TELEPHONE
- FO — FIBER OPTIC
- G — GAS
- E — ELECTRIC
- E — TRAFFIC SIGNAL/LIGHTING
- W — WATER
- SANITARY SEWER
- S — STORM SEWER
- TEST HOLE
- ED — ELECTRONIC DEPTH

JOHN J. BELLIS
062-044796
REGISTERED PROFESSIONAL ENGINEER OF ILLINOIS

John J Bellis
signature

12/14/2021
date

license expires 02/28/2022

AMERICAN SURVEYING & ENGINEERING, P.C.
American Surveying & Engineering, P.C.
30 N. LaSalle St., Suite 3440
Chicago, IL 60602
Phone No. (312) 277-2000

Accurate GROUP, INC.
Accurate Group, Inc.
101 Schekter Road, Suite 200b
Lincolnshire, IL 60069
Phone No. (847) 613-1100

WGI
2001 Butterfield Road, Suite 410
Downers Grove, IL 60515
Phone No. (630) 307-3800
Fax No. (630) 307-7030
Cert No. 6091 - LB No. 7055

USER NAME = Erick.Maleza	DESIGNED -	REVISED -	
	DRAWN - EM	REVISED -	
PLOT SCALE = 100.0000 ' / in.	CHECKED - EG	REVISED -	
PLOT DATE = 12/10/2021	DATE -	REVISED -	

STATE OF ILLINOIS
DEPARTMENT OF TRANSPORTATION

I-80 FROM RIDGE RD. TO ROCK RUN CREEK
JOLIET, ILLINOIS

SCALE: | SHEET 5 OF 25 SHEETS | STA. | TO STA.

F.A. RTE.	SECTION	COUNTY	TOTAL SHEETS	SHEET NO.
		WILL	25	5
		CONTRACT NO. 62N31		
	ILLINOIS	FED. AID PROJECT		

IDOT W.O. 211 & 502

MODEL: 2D SHEET H
FILE NAME: C:\TRANSYSTEMS\PW_LOCAL\TRANSYSTEMS-PW-01\DMS31451\62R19-SHT-SUE-06.DGN

exp.

USER NAME = SALASL	DESIGNED - CMA	REVISED -	
	DRAWN - CMA	REVISED -	
PLOT SCALE = 0.16666667 ' / IN.	CHECKED - BRH	REVISED -	
PLOT DATE = 11/12/2025	DATE - 11/12/2025	REVISED -	

STATE OF ILLINOIS
DEPARTMENT OF TRANSPORTATION

I-80
SUE UTILITIES

SCALE: NTS | SHEET OF SHEETS | STA. | TO STA.

F.A.I. RTE.	SECTION	COUNTY	TOTAL SHEETS	SHEET NO.
80	FAI 80 21 VLS	VARIOUS	467	55
		CONTRACT NO. 62R19		
	ILLINOIS	FED. AID PROJECT		

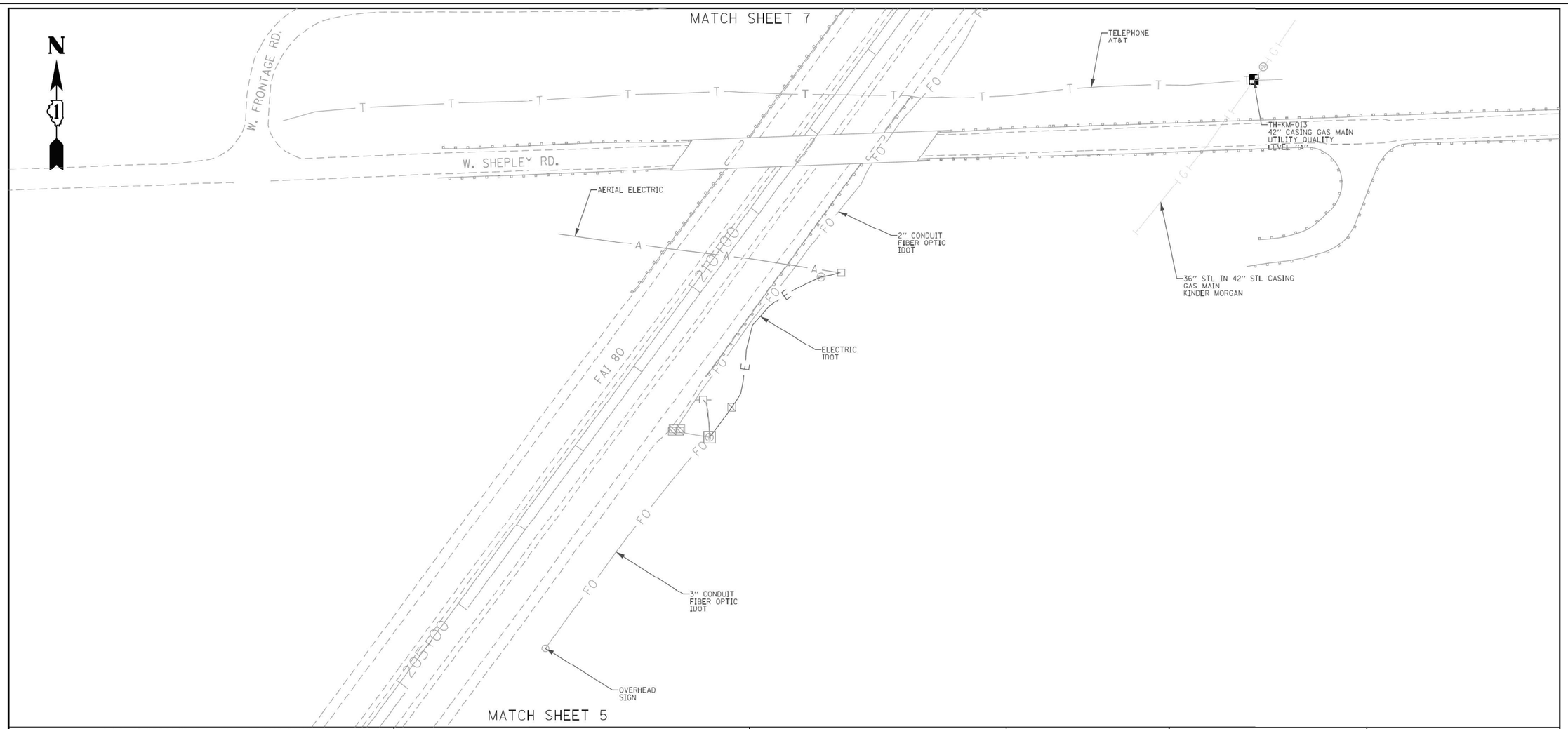

ASCE STANDARDS OF DEPICTION OF SUBSURFACE UTILITIES

QUALITY LEVEL A (QLA)
PRECISE HORIZONTAL AND VERTICAL LOCATION OF UTILITIES OBTAINED BY THE ACTUAL EXPOSURE (OR VERIFICATION OF PREVIOUSLY EXPOSED AND SURVEYED UTILITIES) USING MINIMALLY INTRUSIVE EXCAVATION EQUIPMENT TO MINIMIZE POTENTIAL FOR UTILITY DAMAGE, AND SUBSEQUENT MEASUREMENT OF THE SUBSURFACE UTILITIES WITH OTHER UTILITY ATTRIBUTES SUCH AS TYPE, SIZE & MATERIAL OF UTILITY.

QUALITY LEVEL B (QLB)
INFORMATION OBTAINED THROUGH THE APPLICATION OF APPROPRIATE SURFACE GEOPHYSICAL METHODS TO DETERMINE THE EXISTENCE AND APPROXIMATE HORIZONTAL POSITION OF SUBSURFACE UTILITIES. QUALITY LEVEL B DATA SHOULD BE REPRODUCIBLE BY SURFACE GEOPHYSICS AT ANY POINT OF THEIR DEPICTION. THIS INFORMATION IS SURVEYED TO APPLICABLE TOLERANCES DEFINED BY THE PROJECT AND REDUCED ONTO PLAN DOCUMENTS.

QUALITY LEVEL C (QLC)
INFORMATION OBTAINED BY SURVEYING AND PLOTTING VISIBLE ABOVE-GROUND UTLITY FEATURES AND BY USING PROFESSIONAL JUDGEMENT IN CORRELATING THIS INFORMATION TO QUALITY LEVEL D INFORMATION.

QUALITY LEVEL D (QLD)
INFORMATION DERIVED FROM EXISTING RECORDS OR ORAL RECOLLECTIONS.

GENERAL NOTES:

WGI INC. HAS EXERCISED ITS BEST PROFESSIONAL EXPERTISE AND GEOPHYSICAL PROSPECTING TECHNIQUES TO DEVELOP THIS MAPPING OF SUBSURFACE UTILITIES WITHIN THE PROJECT LIMITS.

WGI INC. DOES NOT GUARANTEE THAT UTILITIES SHOWN COMPRISE ALL UTILITIES WITHIN THE PROJECT AREA.

WGI's SUE QLB INVESTIGATION WAS PERFORMED 01/06/2019 THROUGH 02/14/2020. SUE QLA INVESTIGATION WAS PERFORMED 11/02/2021 THROUGH 11/12/2021. CHANGES TO UTILITIES AFTER THESE DATES MAY HAVE BEEN MADE AND THEREFORE MAY RESULT IN VARIANCES FROM THIS PLAN IF DEEMED ADVISABLE PRIOR TO FINAL DESIGN AND CONSTRUCTION.

UNLESS OTHERWISE NOTED, FIELD LOCATED UTILITIES MEET THE CI/ASCE 38-2 DEFINITION FOR QUALITY LEVEL "A" (QLA) AND QUALITY LEVEL "B" (QLB) STANDARDS.

WGI INC. DISCLAIMER: WGI RECOMMENDS SUE QUALITY LEVEL "A" AT ANY LOCATION WHERE A MORE ACCURATE DEPICTION OF THE UTILITY IS REQUIRED BY IDOT.

UTILITY LEGEND:

- A — AERIAL
- UNKNOWN UTILITY
- O — OIL (PETROLEUM)
- CTV — CABLE TV
- T — TELEPHONE
- FO — FIBER OPTIC
- G — GAS
- E — ELECTRIC
- E — TRAFFIC SIGNAL/LIGHTING
- W — WATER
- SANITARY SEWER
- S — STORM SEWER
- TEST HOLE
- ED — ELECTRONIC DEPTH

JOHN J. BELLIS
062-044796
REGISTERED PROFESSIONAL ENGINEER OF ILLINOIS

John J. Bellis
signature
12/14/2021
date
license expires 02/28/2022

AMERICAN SURVEYING & ENGINEERING, P.C.
American Surveying & Engineering, P.C.
30 N. LaSalle St., Suite 3440
Chicago, IL 60602
Phone No. (312) 277-2000

Accurate GROUP, INC.
Accurate Group, Inc.
101 Schekter Road, Suite 200b
Lincolnshire, IL 60069
Phone No. (847) 613-1100

WGI
2001 Butterfield Road, Suite 410
Downers Grove, IL 60515
Phone No. (630) 307-3800
Fax No. (630) 307-7030
Cert No. 6091 - LB No. 7055

USER NAME = Erick.Maleza	DESIGNED -	REVISED -	
	DRAWN - EM	REVISED -	
PLOT SCALE = 100.0000 ' / in.	CHECKED - EG	REVISED -	
PLOT DATE = 12/14/2021	DATE -	REVISED -	

STATE OF ILLINOIS
DEPARTMENT OF TRANSPORTATION

I-80 FROM RIDGE RD. TO ROCK RUN CREEK
JOLIET, ILLINOIS

SCALE: | SHEET 6 OF 25 SHEETS | STA. TO STA.

F.A. RTE.	SECTION	COUNTY	TOTAL SHEETS	SHEET NO.
		WILL	25	6
		CONTRACT NO. 62N31		
	ILLINOIS	FED. AID PROJECT		

IDOT W.O. 211 & 502

exp.

USER NAME = SALASL	DESIGNED - CMA	REVISED -	
	DRAWN - CMA	REVISED -	
PLOT SCALE = 0.16666667 ' / IN.	CHECKED - BRH	REVISED -	
PLOT DATE = 11/12/2025	DATE - 11/12/2025	REVISED -	

STATE OF ILLINOIS
DEPARTMENT OF TRANSPORTATION

I-80
SUE UTILITIES

SCALE: NTS | SHEET OF SHEETS | STA. TO STA.

F.A.I. RTE.	SECTION	COUNTY	TOTAL SHEETS	SHEET NO.
80	FAI 80 21 VLS	VARIOUS	467	56
		CONTRACT NO. 62R19		
	ILLINOIS	FED. AID PROJECT		

MODEL: 2D SHEET H
FILE NAME: C:\TRANSYSTEMS\SUW_LOCAL\TRANSYSTEMS-PW-01\DMS31451\62R19-SHT-SUE-07.DGN

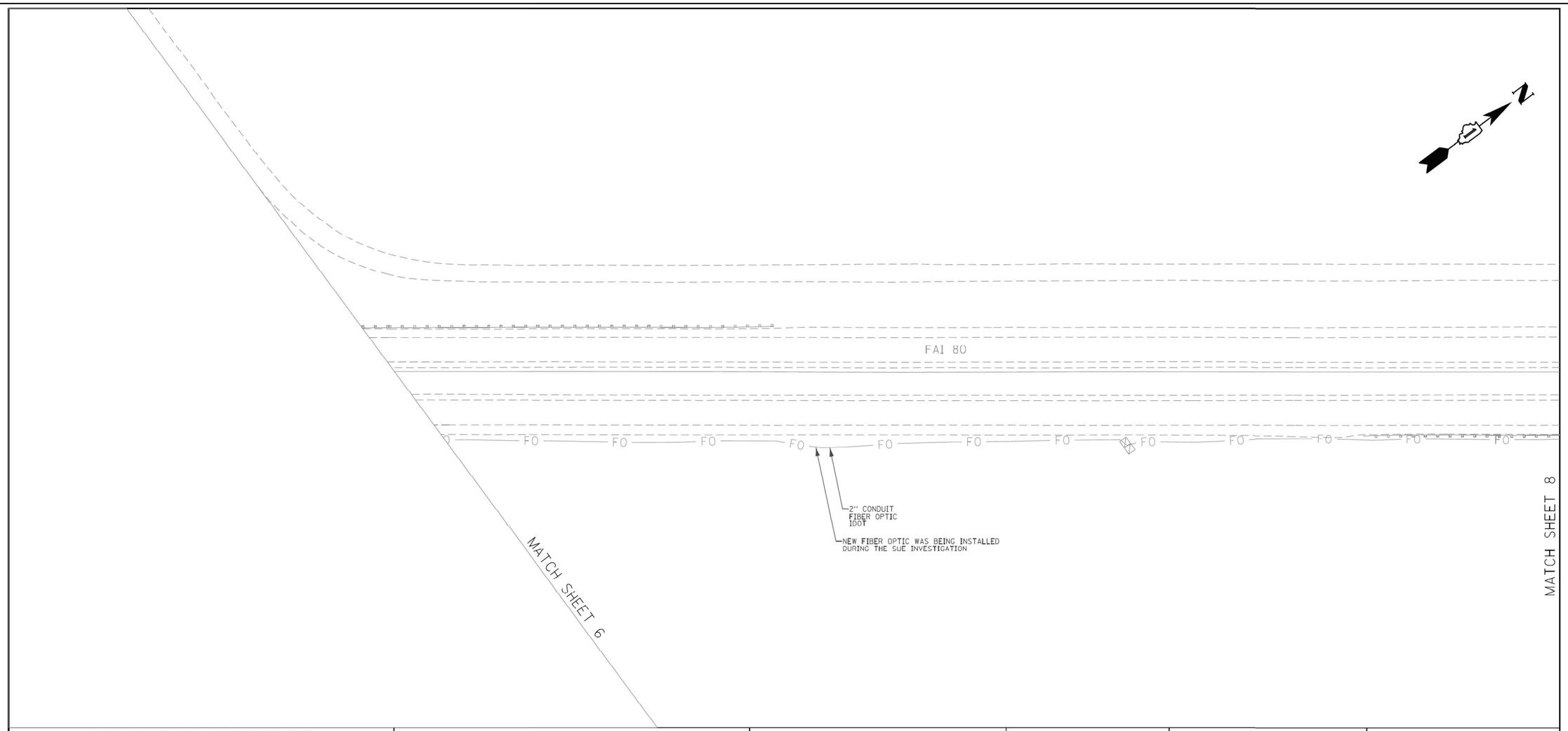

ASCE STANDARDS OF DEPICTION OF SUBSURFACE UTILITIES

QUALITY LEVEL A (QLA)
PRECISE HORIZONTAL AND VERTICAL LOCATION OF UTILITIES OBTAINED BY THE ACTUAL EXPOSURE (OR VERIFICATION OF PREVIOUSLY EXPOSED AND SURVEYED UTILITIES) USING MINIMALLY INTRUSIVE EXCAVATION EQUIPMENT TO MINIMIZE POTENTIAL FOR UTILITY DAMAGE, AND SUBSEQUENT MEASUREMENT OF THE SUBSURFACE UTILITIES WITH OTHER UTILITY ATTRIBUTES SUCH AS TYPE, SIZE & MATERIAL OF UTILITY.

QUALITY LEVEL B (QLB)
INFORMATION OBTAINED THROUGH THE APPLICATION OF APPROPRIATE SURFACE GEOPHYSICAL METHODS TO DETERMINE THE EXISTENCE AND APPROXIMATE HORIZONTAL POSITION OF SUBSURFACE UTILITIES. QUALITY LEVEL B DATA SHOULD BE REPRODUCIBLE BY SURFACE GEOPHYSICS AT ANY POINT OF THEIR DEPICTION. THIS INFORMATION IS SURVEYED TO APPLICABLE TOLERANCES DEFINED BY THE PROJECT AND REDUCED ONTO PLAN DOCUMENTS.

QUALITY LEVEL C (QLC)
INFORMATION OBTAINED BY SURVEYING AND PLOTTING VISIBLE ABOVE-GROUND UTLITY FEATURES AND BY USING PROFESSIONAL JUDGEMENT IN CORRELATING THIS INFORMATION TO QUALITY LEVEL D INFORMATION.

QUALITY LEVEL D (QLD)
INFORMATION DERIVED FROM EXISTING RECORDS OR ORAL RECOLLECTIONS.

GENERAL NOTES:

WGI INC. HAS EXERCISED ITS BEST PROFESSIONAL EXPERTISE AND GEOPHYSICAL PROSPECTING TECHNIQUES TO DEVELOP THIS MAPPING OF SUBSURFACE UTILITIES WITHIN THE PROJECT LIMITS.

WGI INC. DOES NOT GUARANTEE THAT UTILITIES SHOWN COMPRISE ALL UTILITIES WITHIN THE PROJECT AREA.

WGI's SUE QLB INVESTIGATION WAS PERFORMED 01/06/2019 THROUGH 02/14/2020. SUE QLA INVESTIGATION WAS PERFORMED 11/02/2021 THROUGH 11/12/2021. CHANGES TO UTILITIES AFTER THESE DATES MAY HAVE BEEN MADE AND THEREFORE MAY RESULT IN VARIANCES FROM THIS PLAN IF DEEMED ADVISABLE PRIOR TO FINAL DESIGN AND CONSTRUCTION.

UNLESS OTHERWISE NOTED, FIELD LOCATED UTILITIES MEET THE CI/ASCE 38-2 DEFINITION FOR QUALITY LEVEL "A" (QLA) AND QUALITY LEVEL "B" (QLB) STANDARDS.

WGI INC. DISCLAIMER: WGI RECOMMENDS SUE QUALITY LEVEL "A" AT ANY LOCATION WHERE A MORE ACCURATE DEPICTION OF THE UTILITY IS REQUIRED BY IDOT.

UTILITY LEGEND:

- A — AERIAL
- UNKNOWN UTILITY
- O — OIL (PETROLEUM)
- CTV — CABLE TV
- T — TELEPHONE
- FO — FIBER OPTIC
- G — GAS
- E — ELECTRIC
- E — TRAFFIC SIGNAL/LIGHTING
- W — WATER
- SANITARY SEWER
- S — STORM SEWER
- TEST HOLE
- ED — ELECTRONIC DEPTH

JOHN J. BELLIS
062-044796
REGISTERED PROFESSIONAL ENGINEER OF ILLINOIS

signature
12/14/2021
date
license expires 02/28/2022

AMERICAN SURVEYING & ENGINEERING, P.C.
American Surveying & Engineering, P.C.
30 N. LaSalle St., Suite 3440
Chicago, IL 60602
Phone No. (312) 277-2000

Accurate GROUP, INC.
Accurate Group, Inc.
101 Schekter Road, Suite 200b
Lincolnshire, IL 60069
Phone No. (847) 613-1100

WGI
2001 Butterfield Road, Suite 410
Downers Grove, IL 60515
Phone No. (630) 307-3800
Fax No. (630) 307-7030
Cert No. 6091 - LB No. 7055

USER NAME = Erick.Maleza	DESIGNED -	REVISED -	
	DRAWN - EM	REVISED -	
PLOT SCALE = 100.0000 ' / in.	CHECKED - EG	REVISED -	
PLOT DATE = 12/14/2021	DATE -	REVISED -	

STATE OF ILLINOIS
DEPARTMENT OF TRANSPORTATION

I-80 FROM RIDGE RD. TO ROCK RUN CREEK
JOLIET, ILLINOIS

SCALE: | SHEET 7 OF 25 SHEETS | STA. TO STA.

F.A. RTE.	SECTION	COUNTY	TOTAL SHEETS	SHEET NO.
		WILL	25	7
		CONTRACT NO. 62N31		
	ILLINOIS	FED. AID PROJECT		

IDOT W.O. 211 & 502

exp.

USER NAME = SALASL	DESIGNED - CMA	REVISED -	
	DRAWN - CMA	REVISED -	
PLOT SCALE = 0.16666667 ' / IN.	CHECKED - BRH	REVISED -	
PLOT DATE = 11/12/2025	DATE - 11/12/2025	REVISED -	

STATE OF ILLINOIS
DEPARTMENT OF TRANSPORTATION

I-80
SUE UTILITIES

SCALE: NTS | SHEET OF SHEETS | STA. TO STA.

F.A.I. RTE.	SECTION	COUNTY	TOTAL SHEETS	SHEET NO.
80	FAI 80 21 VLS	VARIOUS	467	57
		CONTRACT NO. 62R19		
	ILLINOIS	FED. AID PROJECT		

MODEL: 2D SHEET H
FILE NAME: C:\TRANSYSTEMS\PW_LOCAL\TRANSYSTEMS-PW-01\DMS31451\62R13-SHT-SUE-08.DGN

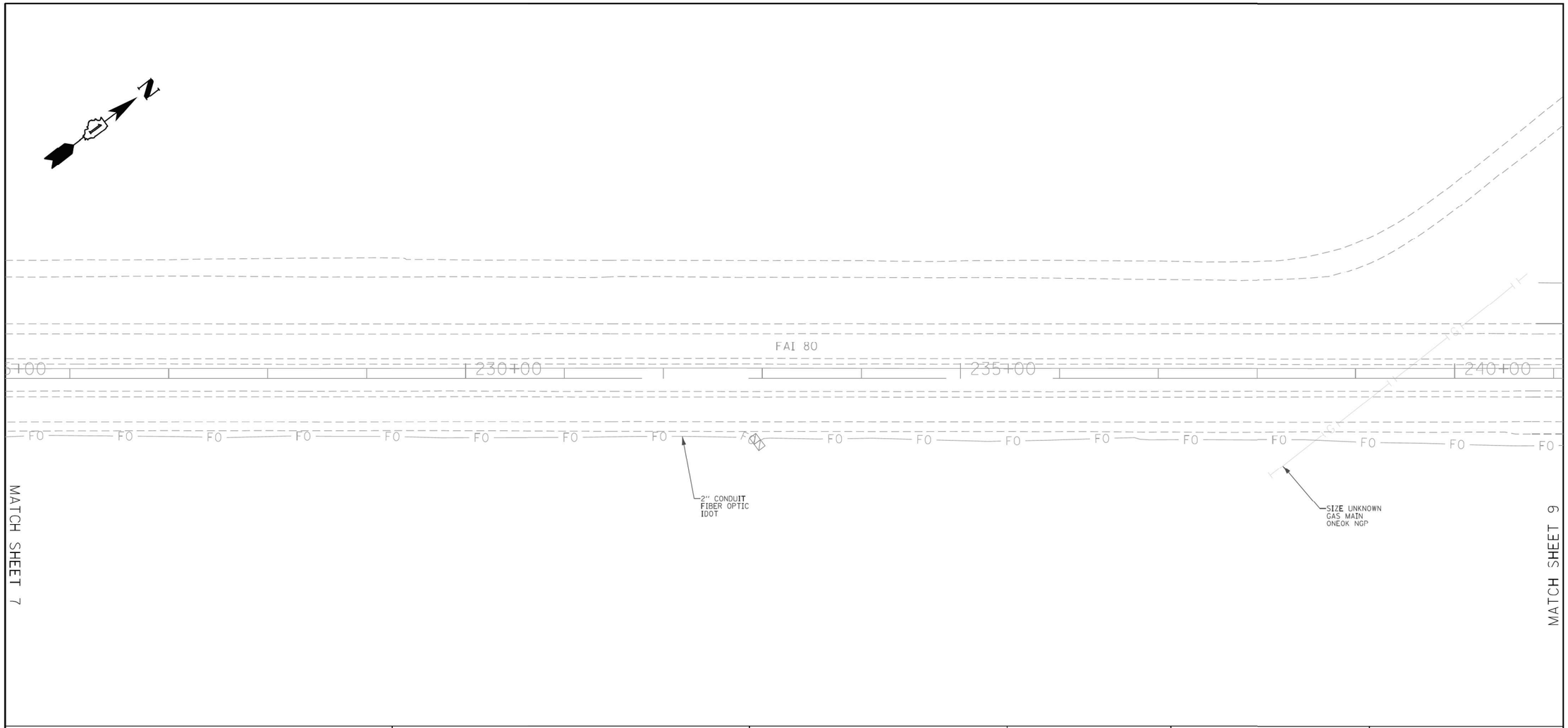

ASCE STANDARDS OF DEPICTION OF SUBSURFACE UTILITIES

QUALITY LEVEL A (QLA)
PRECISE HORIZONTAL AND VERTICAL LOCATION OF UTILITIES OBTAINED BY THE ACTUAL EXPOSURE (OR VERIFICATION OF PREVIOUSLY EXPOSED AND SURVEYED UTILITIES) USING MINIMALLY INTRUSIVE EXCAVATION EQUIPMENT TO MINIMIZE POTENTIAL FOR UTILITY DAMAGE, AND SUBSEQUENT MEASUREMENT OF THE SUBSURFACE UTILITIES WITH OTHER UTILITY ATTRIBUTES SUCH AS TYPE, SIZE & MATERIAL OF UTILITY.

QUALITY LEVEL B (QLB)
INFORMATION OBTAINED THROUGH THE APPLICATION OF APPROPRIATE SURFACE GEOPHYSICAL METHODS TO DETERMINE THE EXISTENCE AND APPROXIMATE HORIZONTAL POSITION OF SUBSURFACE UTILITIES. QUALITY LEVEL B DATA SHOULD BE REPRODUCIBLE BY SURFACE GEOPHYSICS AT ANY POINT OF THEIR DEPICTION. THIS INFORMATION IS SURVEYED TO APPLICABLE TOLERANCES DEFINED BY THE PROJECT AND REDUCED ONTO PLAN DOCUMENTS.

QUALITY LEVEL C (QLC)
INFORMATION OBTAINED BY SURVEYING AND PLOTTING VISIBLE ABOVE-GROUND UTLITY FEATURES AND BY USING PROFESSIONAL JUDGEMENT IN CORRELATING THIS INFORMATION TO QUALITY LEVEL D INFORMATION.

QUALITY LEVEL D (QLD)
INFORMATION DERIVED FROM EXISTING RECORDS OR ORAL RECOLLECTIONS.

GENERAL NOTES:

WGI INC. HAS EXERCISED ITS BEST PROFESSIONAL EXPERTISE AND GEOPHYSICAL PROSPECTING TECHNIQUES TO DEVELOP THIS MAPPING OF SUBSURFACE UTILITIES WITHIN THE PROJECT LIMITS.

WGI INC. DOES NOT GUARANTEE THAT UTILITIES SHOWN COMPRISE ALL UTILITIES WITHIN THE PROJECT AREA.

WGI's SUE QLB INVESTIGATION WAS PERFORMED 01/06/2019 THROUGH 02/14/2020. SUE QLA INVESTIGATION WAS PERFORMED 11/02/2021 THROUGH 11/12/2021. CHANGES TO UTILITIES AFTER THESE DATES MAY HAVE BEEN MADE AND THEREFORE MAY RESULT IN VARIANCES FROM THIS PLAN IF DEEMED ADVISABLE PRIOR TO FINAL DESIGN AND CONSTRUCTION.

UNLESS OTHERWISE NOTED, FIELD LOCATED UTILITIES MEET THE CI/ASCE 38-2 DEFINITION FOR QUALITY LEVEL "A" (QLA) AND QUALITY LEVEL "B" (QLB) STANDARDS.

WGI INC. DISCLAIMER: WGI RECOMMENDS SUE QUALITY LEVEL "A" AT ANY LOCATION WHERE A MORE ACCURATE DEPICTION OF THE UTILITY IS REQUIRED BY IDOT.

UTILITY LEGEND:

- A — *AERIAL*
- *UNKNOWN UTILITY*
- O — *OIL (PETROLEUM)*
- CTV — *CABLE TV*
- T — *TELEPHONE*
- FO — *FIBER OPTIC*
- G — *GAS*
- E — *ELECTRIC*
- E — *TRAFFIC SIGNAL/LIGHTING*
- W — *WATER*
- *SANITARY SEWER*
- *STORM SEWER*
- *TEST HOLE*
- ED — *ELECTRONIC DEPTH*

JOHN J. BELLIS
062-044796
REGISTERED PROFESSIONAL ENGINEER OF ILLINOIS

John J Bellis
signature

12/14/2021
date

license expires 02/28/2022

AMERICAN SURVEYING & ENGINEERING, P.C.
American Surveying & Engineering, P.C.
30 N. LaSalle St., Suite 3440
Chicago, IL 60602
Phone No. (312) 277-2000

Accurate GROUP, INC.
Accurate Group, Inc.
101 Schekter Road, Suite 200b
Lincolnshire, IL 60069
Phone No. (847) 613-1100

WGI
2001 Butterfield Road, Suite 410
Downers Grove, IL 60515
Phone No. (630) 307-3800
Fax No. (630) 307-7030
Cert No. 6091 - LB No. 7055

USER NAME = Erick.Maleza	DESIGNED -	REVISED -	
	DRAWN - EM	REVISED -	
PLOT SCALE = 100.0000 ' / in.	CHECKED - EG	REVISED -	
PLOT DATE = 12/10/2021	DATE -	REVISED -	

STATE OF ILLINOIS
DEPARTMENT OF TRANSPORTATION

I-80 FROM RIDGE RD. TO ROCK RUN CREEK
JOLIET, ILLINOIS

SCALE: | SHEET 8 OF 25 SHEETS | STA. | TO STA.

F.A. RTE.	SECTION	COUNTY	TOTAL SHEETS	SHEET NO.
		WILL	25	8
		CONTRACT NO. 62N31		
	ILLINOIS	FED. AID PROJECT		

IDOT W.O. 211 & 502

MODEL: 2D SHEET H
FILE NAME: C:\TRANSYSTEMS\PW_LOCAL\TRANSYSTEMS-PW-01\DMS31451\62R19-SHT-SUE-09.DGN

exp.

USER NAME = SALASL	DESIGNED - CMA	REVISED -	
	DRAWN - CMA	REVISED -	
PLOT SCALE = 0.16666667 ' / IN.	CHECKED - BRH	REVISED -	
PLOT DATE = 11/12/2025	DATE - 11/12/2025	REVISED -	

STATE OF ILLINOIS
DEPARTMENT OF TRANSPORTATION

I-80
SUE UTILITIES

SCALE: NTS | SHEET OF SHEETS | STA. | TO STA.

F.A.I. RTE.	SECTION	COUNTY	TOTAL SHEETS	SHEET NO.
80	FAI 80 21 VLS	VARIOUS	467	58
		CONTRACT NO. 62R19		
	ILLINOIS	FED. AID PROJECT		

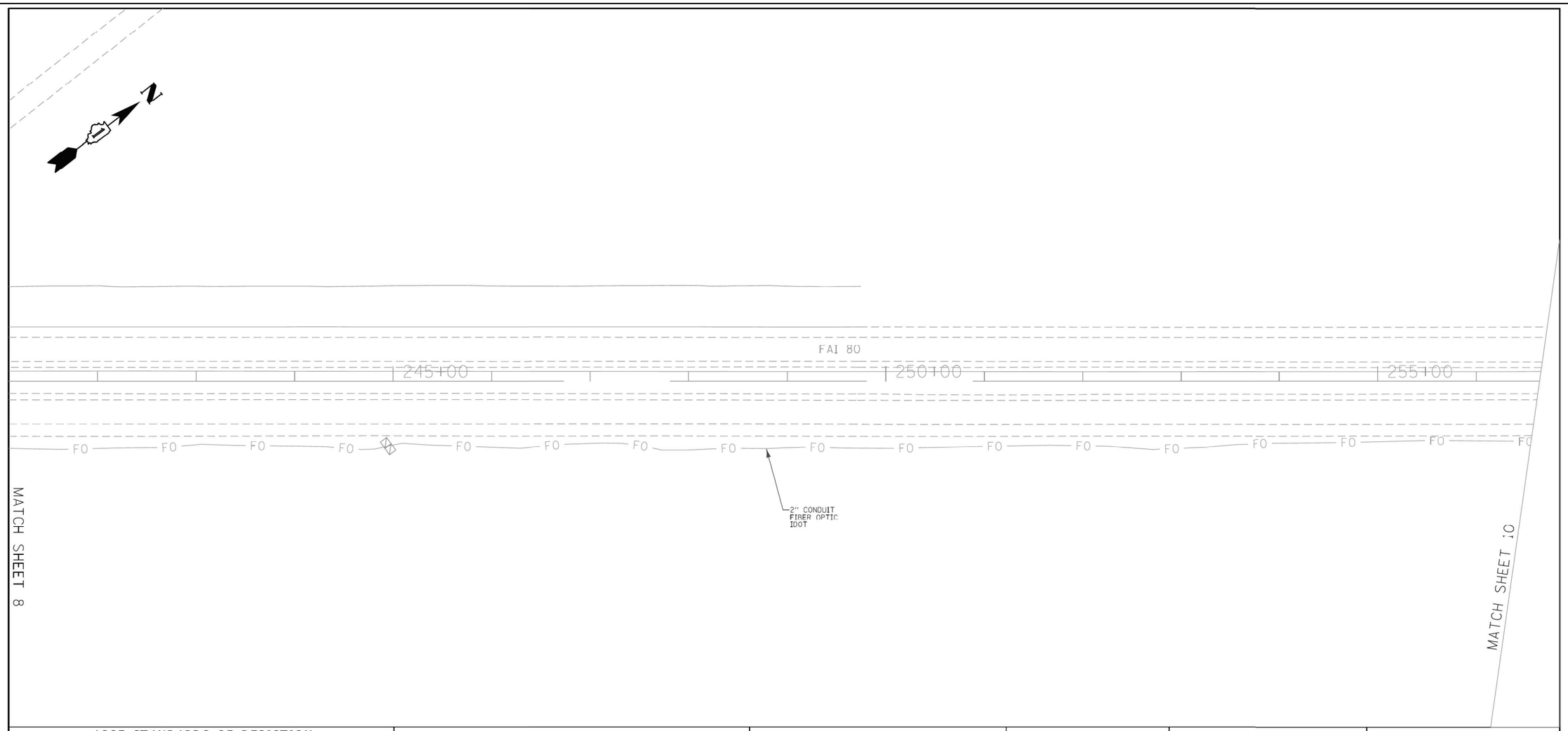

ASCE STANDARDS OF DEPICTION OF SUBSURFACE UTILITIES

QUALITY LEVEL A (QLA)
PRECISE HORIZONTAL AND VERTICAL LOCATION OF UTILITIES OBTAINED BY THE ACTUAL EXPOSURE (OR VERIFICATION OF PREVIOUSLY EXPOSED AND SURVEYED UTILITIES) USING MINIMALLY INTRUSIVE EXCAVATION EQUIPMENT TO MINIMIZE POTENTIAL FOR UTILITY DAMAGE, AND SUBSEQUENT MEASUREMENT OF THE SUBSURFACE UTILITIES WITH OTHER UTILITY ATTRIBUTES SUCH AS TYPE, SIZE & MATERIAL OF UTILITY.

QUALITY LEVEL B (QLB)
INFORMATION OBTAINED THROUGH THE APPLICATION OF APPROPRIATE SURFACE GEOPHYSICAL METHODS TO DETERMINE THE EXISTENCE AND APPROXIMATE HORIZONTAL POSITION OF SUBSURFACE UTILITIES.
QUALITY LEVEL B DATA SHOULD BE REPRODUCIBLE BY SURFACE GEOPHYSICS AT ANY POINT OF THEIR DEPICTION. THIS INFORMATION IS SURVEYED TO APPLICABLE TOLERANCES DEFINED BY THE PROJECT AND REDUCED ONTO PLAN DOCUMENTS.

QUALITY LEVEL C (QLC)
INFORMATION OBTAINED BY SURVEYING AND PLOTTING VISIBLE ABOVE-GROUND UTILITY FEATURES AND BY USING PROFESSIONAL JUDGEMENT IN CORRELATING THIS INFORMATION TO QUALITY LEVEL D INFORMATION.

QUALITY LEVEL D (QLD)
INFORMATION DERIVED FROM EXISTING RECORDS OR ORAL RECOLLECTIONS.

GENERAL NOTES:

WGI INC. HAS EXERCISED ITS BEST PROFESSIONAL EXPERTISE AND GEOPHYSICAL PROSPECTING TECHNIQUES TO DEVELOP THIS MAPPING OF SUBSURFACE UTILITIES WITHIN THE PROJECT LIMITS.

WGI INC. DOES NOT GUARANTEE THAT UTILITIES SHOWN COMPRISE ALL UTILITIES WITHIN THE PROJECT AREA.

WGI's SUE QLB INVESTIGATION WAS PERFORMED 01/06/2019 THROUGH 02/14/2020. SUE QLA INVESTIGATION WAS PERFORMED 11/02/2021 THROUGH 11/12/2021. CHANGES TO UTILITIES AFTER THESE DATES MAY HAVE BEEN MADE AND THEREFORE MAY RESULT IN VARIANCES FROM THIS PLAN IF DEEMED ADVISABLE PRIOR TO FINAL DESIGN AND CONSTRUCTION.

UNLESS OTHERWISE NOTED, FIELD LOCATED UTILITIES MEET THE CI/ASCE 38-2 DEFINITION FOR QUALITY LEVEL "A" (QLA) AND QUALITY LEVEL "B" (QLB) STANDARDS.

WGI INC. DISCLAIMER: WGI RECOMMENDS SUE QUALITY LEVEL "A" AT ANY LOCATION WHERE A MORE ACCURATE DEPICTION OF THE UTILITY IS REQUIRED BY IDOT.

UTILITY LEGEND:

- A — AERIAL
- UNKNOWN UTILITY
- O — OIL (PETROLEUM)
- CTV — CABLE TV
- T — TELEPHONE
- FO — FIBER OPTIC
- G — GAS
- E — ELECTRIC
- E — TRAFFIC SIGNAL/LIGHTING
- W — WATER
- SANITARY SEWER
- S — STORM SEWER
- TEST HOLE
- ED — ELECTRONIC DEPTH

JOHN J. BELLIS
062-044796
REGISTERED PROFESSIONAL ENGINEER OF ILLINOIS

signature

12/14/2021
date

license expires 02/28/2022

AMERICAN SURVEYING & ENGINEERING, P.C.
American Surveying & Engineering, P.C.
30 N. LaSalle St., Suite 3440
Chicago, IL 60602
Phone No. (312) 277-2000

Accurate GROUP, INC.
Accurate Group, Inc.
101 Schekter Road, Suite 200b
Lincolnshire, IL 60069
Phone No. (847) 613-1100

WGI
2001 Butterfield Road, Suite 410
Downers Grove, IL 60515
Phone No. (630) 307-3800
Fax No. (630) 307-7030
Cert No. 6091 - LB No. 7055

USER NAME = Erick.Maleza	DESIGNED -	REVISED -	
	DRAWN - EM	REVISED -	
PLOT SCALE = 100.0000 ' / in.	CHECKED - EG	REVISED -	
PLOT DATE = 12/10/2021	DATE -	REVISED -	

STATE OF ILLINOIS
DEPARTMENT OF TRANSPORTATION

I-80 FROM RIDGE RD. TO ROCK RUN CREEK
JOLIET, ILLINOIS

SCALE: | SHEET 9 OF 25 SHEETS | STA. TO STA.

F.A. RTE.	SECTION	COUNTY	TOTAL SHEETS	SHEET NO.
		WILL	25	9
		CONTRACT NO. 62N31		
	ILLINOIS	FED. AID PROJECT		

IDOT W.O. 211 & 502

exp.

USER NAME = SALASL	DESIGNED - CMA	REVISED -	
	DRAWN - CMA	REVISED -	
PLOT SCALE = 0.16666667 ' / IN.	CHECKED - BRH	REVISED -	
PLOT DATE = 11/12/2025	DATE - 11/12/2025	REVISED -	

STATE OF ILLINOIS
DEPARTMENT OF TRANSPORTATION

I-80
SUE UTILITIES

SCALE: NTS | SHEET OF SHEETS | STA. TO STA.

F.A.I. RTE.	SECTION	COUNTY	TOTAL SHEETS	SHEET NO.
80	FAI 80 21 VLS	VARIOUS	467	59
		CONTRACT NO. 62R19		
	ILLINOIS	FED. AID PROJECT		

MODEL: 2D SHEET H
FILE NAME: C:\TRANSYSTEMS\PW_LOCAL\TRANSYSTEMS-PW-01\DMS31451\62R19-SHT-SUE-10.DGN

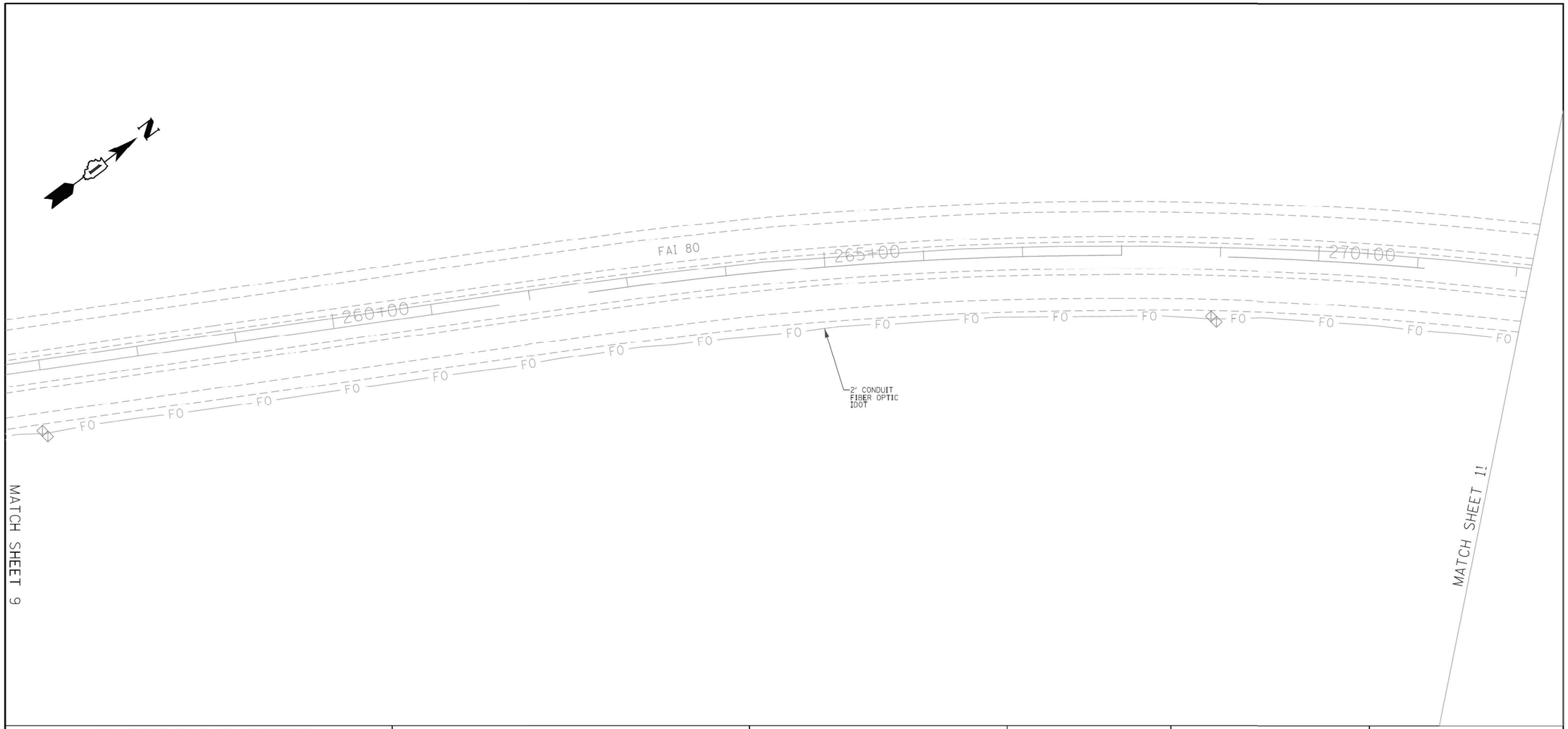

ASCE STANDARDS OF DEPICTION OF SUBSURFACE UTILITIES

QUALITY LEVEL A (QLA)
PRECISE HORIZONTAL AND VERTICAL LOCATION OF UTILITIES OBTAINED BY THE ACTUAL EXPOSURE (OR VERIFICATION OF PREVIOUSLY EXPOSED AND SURVEYED UTILITIES) USING MINIMALLY INTRUSIVE EXCAVATION EQUIPMENT TO MINIMIZE POTENTIAL FOR UTILITY DAMAGE, AND SUBSEQUENT MEASUREMENT OF THE SUBSURFACE UTILITIES WITH OTHER UTILITY ATTRIBUTES SUCH AS TYPE, SIZE & MATERIAL OF UTILITY.

QUALITY LEVEL B (QLB)
INFORMATION OBTAINED THROUGH THE APPLICATION OF APPROPRIATE SURFACE GEOPHYSICAL METHODS TO DETERMINE THE EXISTENCE AND APPROXIMATE HORIZONTAL POSITION OF SUBSURFACE UTILITIES.
QUALITY LEVEL B DATA SHOULD BE REPRODUCIBLE BY SURFACE GEOPHYSICS AT ANY POINT OF THEIR DEPICTION. THIS INFORMATION IS SURVEYED TO APPLICABLE TOLERANCES DEFINED BY THE PROJECT AND REDUCED ONTO PLAN DOCUMENTS.

QUALITY LEVEL C (QLC)
INFORMATION OBTAINED BY SURVEYING AND PLOTTING VISIBLE ABOVE-GROUND UTLITY FEATURES AND BY USING PROFESSIONAL JUDGEMENT IN CORRELATING THIS INFORMATION TO QUALITY LEVEL D INFORMATION.

QUALITY LEVEL D (QLD)
INFORMATION DERIVED FROM EXISTING RECORDS OR ORAL RECOLLECTIONS.

GENERAL NOTES:

WGI INC. HAS EXERCISED ITS BEST PROFESSIONAL EXPERTISE AND GEOPHYSICAL PROSPECTING TECHNIQUES TO DEVELOP THIS MAPPING OF SUBSURFACE UTILITIES WITHIN THE PROJECT LIMITS.

WGI INC. DOES NOT GUARANTEE THAT UTILITIES SHOWN COMPRISE ALL UTILITIES WITHIN THE PROJECT AREA.

WGI's SUE QLB INVESTIGATION WAS PERFORMED 01/06/2019 THROUGH 02/14/2020. SUE QLA INVESTIGATION WAS PERFORMED 11/02/2021 THROUGH 11/12/2021. CHANGES TO UTILITIES AFTER THESE DATES MAY HAVE BEEN MADE AND THEREFORE MAY RESULT IN VARIANCES FROM THIS PLAN IF DEEMED ADVISABLE PRIOR TO FINAL DESIGN AND CONSTRUCTION.

UNLESS OTHERWISE NOTED, FIELD LOCATED UTILITIES MEET THE CI/ASCE 38-2 DEFINITION FOR QUALITY LEVEL "A" (QLA) AND QUALITY LEVEL "B" (QLB) STANDARDS.

WGI INC. DISCLAIMER: WGI RECOMMENDS SUE QUALITY LEVEL "A" AT ANY LOCATION WHERE A MORE ACCURATE DEPICTION OF THE UTILITY IS REQUIRED BY IDOT.

UTILITY LEGEND:

- A — AERIAL
- UNKNOWN UTILITY
- O — OIL (PETROLEUM)
- CTV — CABLE TV
- T — TELEPHONE
- FO — FIBER OPTIC
- G — GAS
- E — ELECTRIC
- E — TRAFFIC SIGNAL/LIGHTING
- W — WATER
- SANITARY SEWER
- S — STORM SEWER
- TEST HOLE
- ED — ELECTRONIC DEPTH

JOHN J. BELLIS
062-044796
REGISTERED PROFESSIONAL ENGINEER OF ILLINOIS

John J Bellis
signature

12/14/2021
date

license expires 02/28/2022

AMERICAN SURVEYING & ENGINEERING, P.C.
American Surveying & Engineering, P.C.
30 N. LaSalle St., Suite 3440
Chicago, IL 60602
Phone No. (312) 277-2000

Accurate GROUP, INC.
Accurate Group, Inc.
101 Schekter Road, Suite 200b
Lincolnshire, IL 60069
Phone No. (847) 613-1100

WGI
2001 Butterfield Road, Suite 410
Downers Grove, IL 60515
Phone No. (630) 307-3800
Fax No. (630) 307-7030
Cert No. 6091 - LB No. 7055

USER NAME = Erick.Maleza	DESIGNED -	REVISED -	
	DRAWN - EM	REVISED -	
PLOT SCALE = 100.0000 ' / in.	CHECKED - EG	REVISED -	
PLOT DATE = 12/10/2021	DATE -	REVISED -	

STATE OF ILLINOIS
DEPARTMENT OF TRANSPORTATION

I-80 FROM RIDGE RD. TO ROCK RUN CREEK
JOLIET, ILLINOIS

SCALE: | SHEET 10 OF 25 SHEETS | STA. TO STA.

F.A. RTE.	SECTION	COUNTY	TOTAL SHEETS	SHEET NO.
		WILL	25	10
		CONTRACT NO. 62N31		
	ILLINOIS	FED. AID PROJECT		

IDOT W.O. 211 & 502

exp.

USER NAME = SALASL	DESIGNED - CMA	REVISED -	
	DRAWN - CMA	REVISED -	
PLOT SCALE = 0.16666667 ' / IN.	CHECKED - BRH	REVISED -	
PLOT DATE = 11/12/2025	DATE - 11/12/2025	REVISED -	

STATE OF ILLINOIS
DEPARTMENT OF TRANSPORTATION

I-80
SUE UTILITIES

SCALE: NTS | SHEET OF SHEETS | STA. TO STA.

F.A.I. RTE.	SECTION	COUNTY	TOTAL SHEETS	SHEET NO.
80	FAI 80 21 VLS	VARIOUS	467	60
		CONTRACT NO. 62R19		
	ILLINOIS	FED. AID PROJECT		

MODEL: 2D SHEET H
FILE NAME: C:\TRANSYSTEMS\PW_LOCAL\TRANSYSTEMS-PW-01\DMS31451\62R19-SHT-SUE-11.DGN

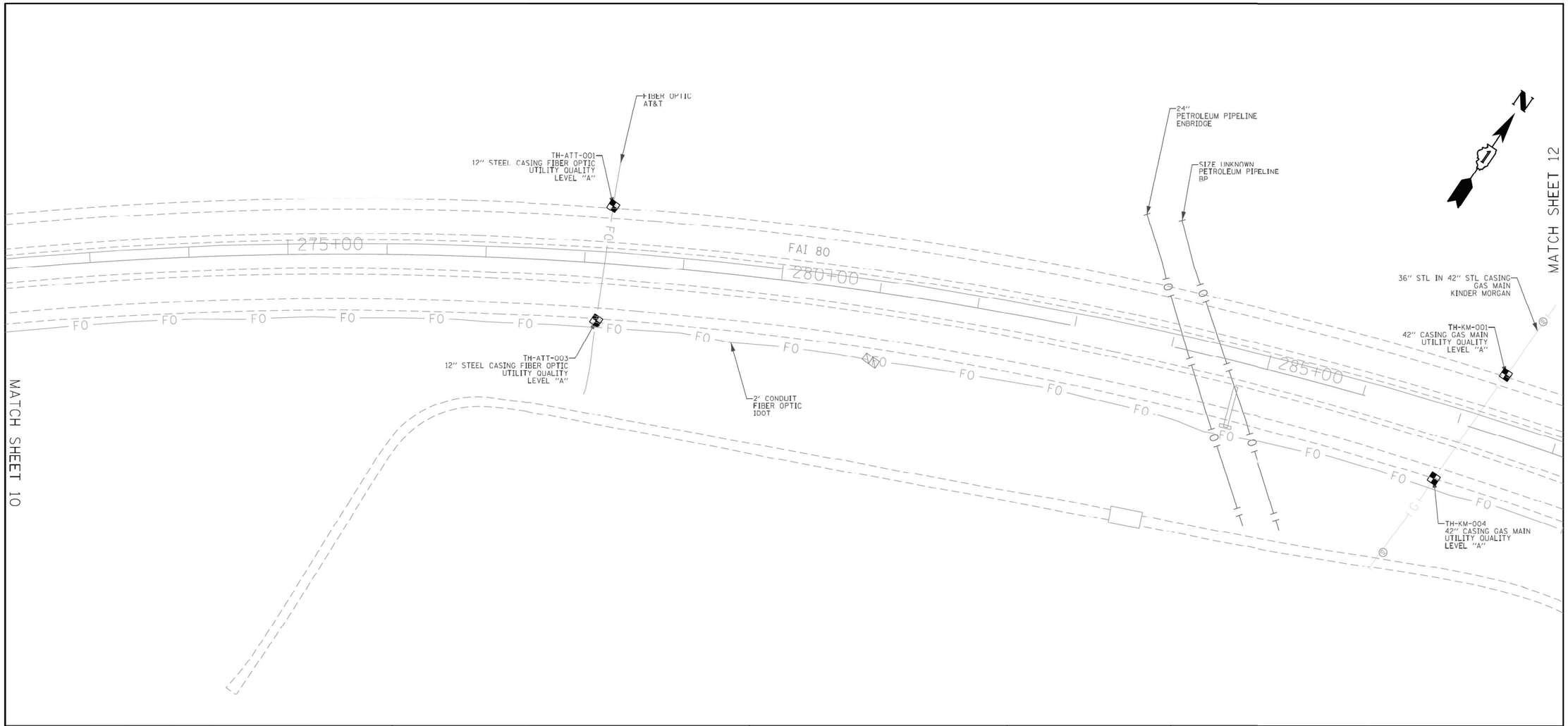

ASCE STANDARDS OF DEPICTION OF SUBSURFACE UTILITIES

QUALITY LEVEL A (QLA)
PRECISE HORIZONTAL AND VERTICAL LOCATION OF UTILITIES OBTAINED BY THE ACTUAL EXPOSURE (OR VERIFICATION OF PREVIOUSLY EXPOSED AND SURVEYED UTILITIES) USING MINIMALLY INTRUSIVE EXCAVATION EQUIPMENT TO MINIMIZE POTENTIAL FOR UTILITY DAMAGE, AND SUBSEQUENT MEASUREMENT OF THE SUBSURFACE UTILITIES WITH OTHER UTILITY ATTRIBUTES SUCH AS TYPE, SIZE & MATERIAL OF UTILITY.

QUALITY LEVEL B (QLB)
INFORMATION OBTAINED THROUGH THE APPLICATION OF APPROPRIATE SURFACE GEOPHYSICAL METHODS TO DETERMINE THE EXISTENCE AND APPROXIMATE HORIZONTAL POSITION OF SUBSURFACE UTILITIES. QUALITY LEVEL B DATA SHOULD BE REPRODUCIBLE BY SURFACE GEOPHYSICS AT ANY POINT OF THEIR DEPICTION. THIS INFORMATION IS SURVEYED TO APPLICABLE TOLERANCES DEFINED BY THE PROJECT AND REDUCED ONTO PLAN DOCUMENTS.

QUALITY LEVEL C (QLC)
INFORMATION OBTAINED BY SURVEYING AND PLOTTING VISIBLE ABOVE-GROUND UTLITY FEATURES AND BY USING PROFESSIONAL JUDGEMENT IN CORRELATING THIS INFORMATION TO QUALITY LEVEL D INFORMATION.

QUALITY LEVEL D (QLD)
INFORMATION DERIVED FROM EXISTING RECORDS OR ORAL RECOLLECTIONS.

GENERAL NOTES:

WGI INC. HAS EXERCISED ITS BEST PROFESSIONAL EXPERTISE AND GEOPHYSICAL PROSPECTING TECHNIQUES TO DEVELOP THIS MAPPING OF SUBSURFACE UTILITIES WITHIN THE PROJECT LIMITS.

WGI INC. DOES NOT GUARANTEE THAT UTILITIES SHOWN COMPRISE ALL UTILITIES WITHIN THE PROJECT AREA.

WGI's SUE QLB INVESTIGATION WAS PERFORMED 01/06/2019 THROUGH 02/14/2020. SUE QLA INVESTIGATION WAS PERFORMED 11/02/2021 THROUGH 11/12/2021. CHANGES TO UTILITIES AFTER THESE DATES MAY HAVE BEEN MADE AND THEREFORE MAY RESULT IN VARIANCES FROM THIS PLAN IF DEEMED ADVISABLE PRIOR TO FINAL DESIGN AND CONSTRUCTION.

UNLESS OTHERWISE NOTED, FIELD LOCATED UTILITIES MEET THE CI/ASCE 38-2 DEFINITION FOR QUALITY LEVEL "A" (QLA) AND QUALITY LEVEL "B" (QLB) STANDARDS.

WGI INC. DISCLAIMER: WGI RECOMMENDS SUE QUALITY LEVEL "A" AT ANY LOCATION WHERE A MORE ACCURATE DEPICTION OF THE UTILITY IS REQUIRED BY IDOT.

UTILITY LEGEND:

- A — *AERIAL*
- *UNKNOWN UTILITY*
- O — *OIL (PETROLEUM)*
- CTV — *CABLE TV*
- T — *TELEPHONE*
- FO — *FIBER OPTIC*
- G — *GAS*
- E — *ELECTRIC*
- E — *TRAFFIC SIGNAL/LIGHTING*
- W — *WATER*
- *SANITARY SEWER*
- *STORM SEWER*
- *TEST HOLE*
- ED — *ELECTRONIC DEPTH*

JOHN J. BELLIS
062-044796
REGISTERED PROFESSIONAL ENGINEER OF ILLINOIS

signature
12/14/2021
date
license expires 02/28/2022

AMERICAN SURVEYING & ENGINEERING, P.C.
American Surveying & Engineering, P.C.
30 N. LaSalle St., Suite 3440
Chicago, IL 60602
Phone No. (312) 277-2000

Accurate GROUP, INC.
Accurate Group, Inc.
101 Schekter Road, Suite 200b
Lincolnshire, IL 60069
Phone No. (847) 613-1100

WGI
2001 Butterfield Road, Suite 410
Downers Grove, IL 60515
Phone No. (630) 307-3800
Fax No. (630) 307-7030
Cert No. 6091 - LB No. 7055

USER NAME = Erick.Maleza	DESIGNED -	REVISED -	
	DRAWN - EM	REVISED -	
PLOT SCALE = 100.0000 ' / in.	CHECKED - FG	REVISED -	
PLOT DATE = 12/10/2021	DATE -	REVISED -	

STATE OF ILLINOIS
DEPARTMENT OF TRANSPORTATION

I-80 FROM RIDGE RD. TO ROCK RUN CREEK
JOLIET, ILLINOIS

SCALE: | SHEET 11 OF 25 SHEETS | STA. TO STA.

F.A. RTE.	SECTION	COUNTY	TOTAL SHEETS	SHEET NO.
		WILL	25	11
		CONTRACT NO. 62N31		
		ILLINOIS	FED. AID PROJECT	

IDOT W.O. 211 & 502

exp.

USER NAME = SALASL	DESIGNED - CMA	REVISED -	
	DRAWN - CMA	REVISED -	
PLOT SCALE = 0.16666667 ' / IN.	CHECKED - BRH	REVISED -	
PLOT DATE = 11/12/2025	DATE - 11/12/2025	REVISED -	

STATE OF ILLINOIS
DEPARTMENT OF TRANSPORTATION

I-80
SUE UTILITIES

SCALE: NTS | SHEET OF SHEETS | STA. TO STA.

F.A.I. RTE.	SECTION	COUNTY	TOTAL SHEETS	SHEET NO.
80	FAI 80 21 VLS	VARIOUS	467	61
		CONTRACT NO. 62R19		
		ILLINOIS	FED. AID PROJECT	

MODEL: 2D SHEET H
FILE NAME: C:\TRANSYSTEMS\PW_LOCAL\TRANSYSTEMS-PW-01\DMS31451\62R19-SHT-SUE-12.DGN

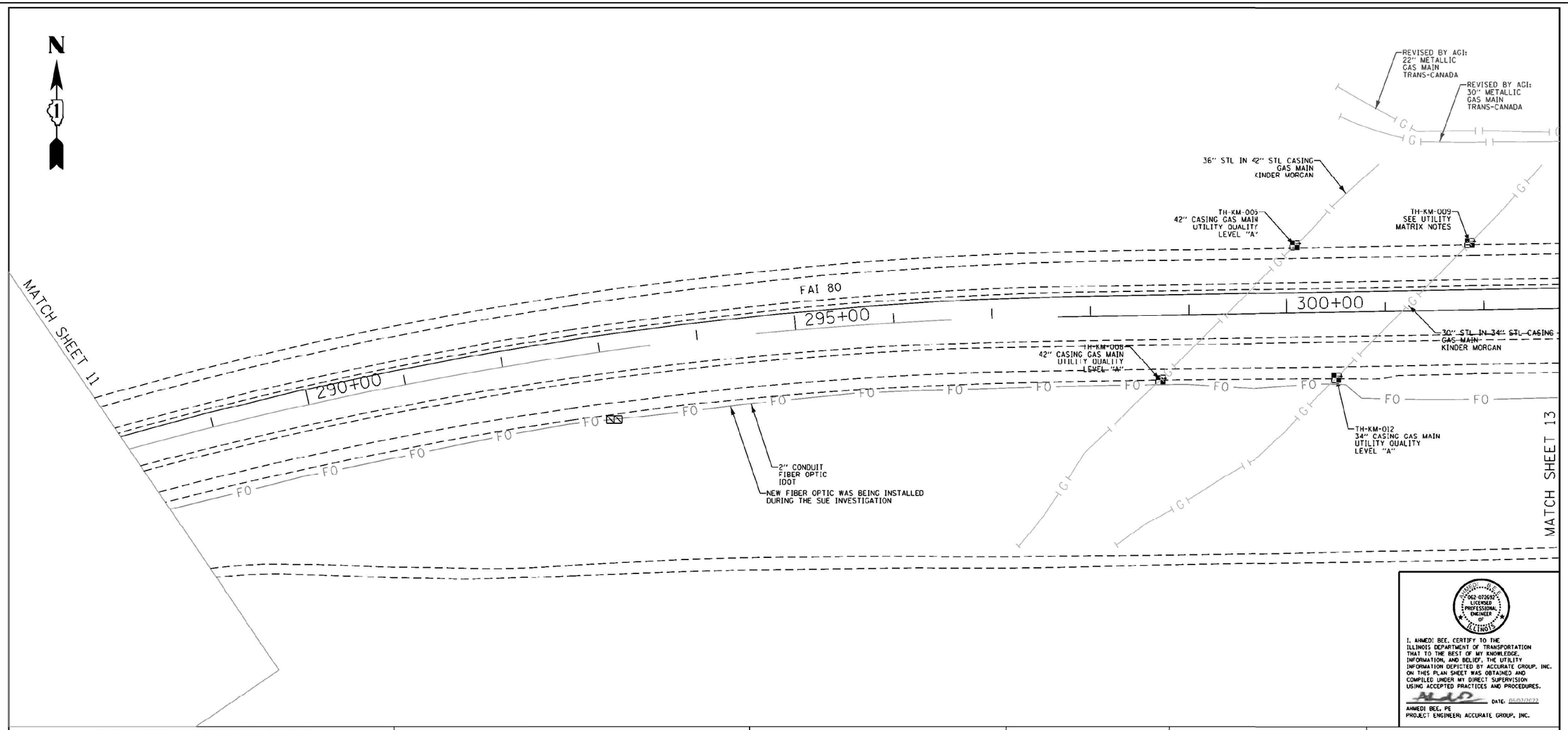

062-070692
LICENSED
PROFESSIONAL
ENGINEER
OF
ILLINOIS

I, AHMEDI BEE, CERTIFY TO THE ILLINOIS DEPARTMENT OF TRANSPORTATION THAT TO THE BEST OF MY KNOWLEDGE, INFORMATION, AND BELIEF, THE UTILITY INFORMATION DEPICTED BY ACCURATE GROUP, INC. ON THIS PLAN SHEET WAS OBTAINED AND COMPILED UNDER MY DIRECT SUPERVISION USING ACCEPTED PRACTICES AND PROCEDURES.

DATE: 06/02/2022

AHMEDI BEE, PE
PROJECT ENGINEER; ACCURATE GROUP, INC.

ASCE STANDARDS OF DEPICTION OF SUBSURFACE UTILITIES

QUALITY LEVEL A (QLA)
PRECISE HORIZONTAL AND VERTICAL LOCATION OF UTILITIES OBTAINED BY THE ACTUAL EXPOSURE (OR VERIFICATION OF PREVIOUSLY EXPOSED AND SURVEYED UTILITIES) USING MINIMALLY INTRUSIVE EXCAVATION EQUIPMENT TO MINIMIZE POTENTIAL FOR UTILITY DAMAGE, AND SUBSEQUENT MEASUREMENT OF THE SUBSURFACE UTILITIES WITH OTHER UTILITY ATTRIBUTES SUCH AS TYPE, SIZE & MATERIAL OF UTILITY.

QUALITY LEVEL B (QLB)
INFORMATION OBTAINED THROUGH THE APPLICATION OF APPROPRIATE SURFACE GEOPHYSICAL METHODS TO DETERMINE THE EXISTENCE AND APPROXIMATE HORIZONTAL POSITION OF SUBSURFACE UTILITIES. QUALITY LEVEL B DATA SHOULD BE REPRODUCIBLE BY SURFACE GEOPHYSICS AT ANY POINT OF THEIR DEPICTION. THIS INFORMATION IS SURVEYED TO APPLICABLE TOLERANCES DEFINED BY THE PROJECT AND REDUCED ONTO PLAN DOCUMENTS.

QUALITY LEVEL C (QLC)
INFORMATION OBTAINED BY SURVEYING AND PLOTTING VISIBLE ABOVE-GROUND UTLITY FEATURES AND BY USING PROFESSIONAL JUDGEMENT IN CORRELATING THIS INFORMATION TO QUALITY LEVEL D INFORMATION.

QUALITY LEVEL D (QLD)
INFORMATION DERIVED FROM EXISTING RECORDS OR ORAL RECOLLECTIONS.

GENERAL NOTES:

WGI INC. HAS EXERCISED ITS BEST PROFESSIONAL EXPERTISE AND GEOPHYSICAL PROSPECTING TECHNIQUES TO DEVELOP THIS MAPPING OF SUBSURFACE UTILITIES WITHIN THE PROJECT LIMITS.

WGI INC. DOES NOT GUARANTEE THAT UTILITIES SHOWN COMPRISE ALL UTILITIES WITHIN THE PROJECT AREA.

WGI's SUE QLB INVESTIGATION WAS PERFORMED 01/06/2019 THROUGH 02/14/2020. SUE QLA INVESTIGATION WAS FERFORMED 11/02/2021 THROUGH 11/12/2021. CHANGES TO UTILITIES AFTER THESE DATES MAY HAVE BEEN MADE AND THEREFORE MAY RESULT IN VARIANCES FROM THIS PLAN IF DEEMED ADVISABLE PRIOR TO FINAL DESIGN AND CONSTRUCTION.

UNLESS OTHERWISE NOTED, FIELD LOCATED UTILITIES MEET THE CI/ASCE 38-2 DEFINITION FOR QUALITY LEVEL "A" (QLA) AND QUALITY LEVEL "B" (QLB) STANDARDS.

WGI INC. DISCLAIMER: WGI RECOMMENDS SUE QUALITY LEVEL "A" AT ANY LOCATION WHERE A MORE ACCURATE DEPICTION OF THE UTILITY IS REQUIRED BY IDOT.

UTILITY LEGEND:

- A — *AERIAL*
- *UNKNOWN UTILITY*
- O — *OIL (PETROLEUM)*
- CTV — *CABLE TV*
- T — *TELEPHONE*
- FO — *FIBER OPTIC*
- G — *GAS*
- E — *ELECTRIC*
- E — *TRAFFIC SIGNAL/LIGHTING*
- W — *WATER*
- *SANITARY SEWER*
- *STORM SEWER*
- *TEST HOLE*
- ED — *ELECTRONIC DEPTH*

JOHN J. BELLIS
062-044796
REGISTERED
PROFESSIONAL
ENGINEER
OF
ILLINOIS

signature

date

license expires 02/28/2022

AMERICAN SURVEYING & ENGINEERING, P.C.
American Surveying & Engineering, P.C.
30 N. LaSalle St., Suite 3440
Chicago, IL 60602
Phone No. (312) 277-2000

Accurate GROUP, INC.
Accurate Group, Inc.
101 Schekter Road, Suite 200b
Lincolnshire, IL 60069
Phone No. (847) 613-1100

WGI
2001 Butterfield Road, Suite 410
Downers Grove, IL 60515
Phone No. (630) 307-3800
Fax No. (630) 307-7030
Cert No. 6091 - LB No. 7055

USER NAME = malkufahy	DESIGNED -	REVISED - 06/02/2022-AB-AGI	
	DRAWN - EM	REVISED -	
PLOT SCALE = 100.000 ' / in.	CHECKED - FG	REVISED -	
PLOT DATE = 6/2/2022	DATE -	REVISED -	

STATE OF ILLINOIS
DEPARTMENT OF TRANSPORTATION

I-80 FROM RIDGE RD. TO ROCK RUN CREEK
JOLIET, ILLINOIS

SCALE: | SHEET 12 OF 25 SHEETS | STA. TO STA.

F.A. RTE.	SECTION	COUNTY	TOTAL SHEETS	SHEET NO.
		WILL	25	12
		CONTRACT NO. 62N31		
		ILLINOIS	FED. AID PROJECT	

IDOT W.O. 211 & 502

exp.

USER NAME = SALASL	DESIGNED - CMA	REVISED -	
	DRAWN - CMA	REVISED -	
PLOT SCALE = 0.16666667 ' / IN.	CHECKED - BRH	REVISED -	
PLOT DATE = 11/12/2025	DATE - 11/12/2025	REVISED -	

STATE OF ILLINOIS
DEPARTMENT OF TRANSPORTATION

I-80
SUE UTILITIES

SCALE: NTS | SHEET OF SHEETS | STA. TO STA.

F.A.I. RTE.	SECTION	COUNTY	TOTAL SHEETS	SHEET NO.
80	FAI 80 21 VLS	VARIOUS	467	62
		CONTRACT NO. 62R19		
		ILLINOIS	FED. AID PROJECT	

MODEL: 2D SHEET H
FILE NAME: C:\TRANSYSTEMS\SUW_LOCAL\TRANSYSTEMS-PW-01\DMS31451\62R19-SHT-SUE-13.DGN

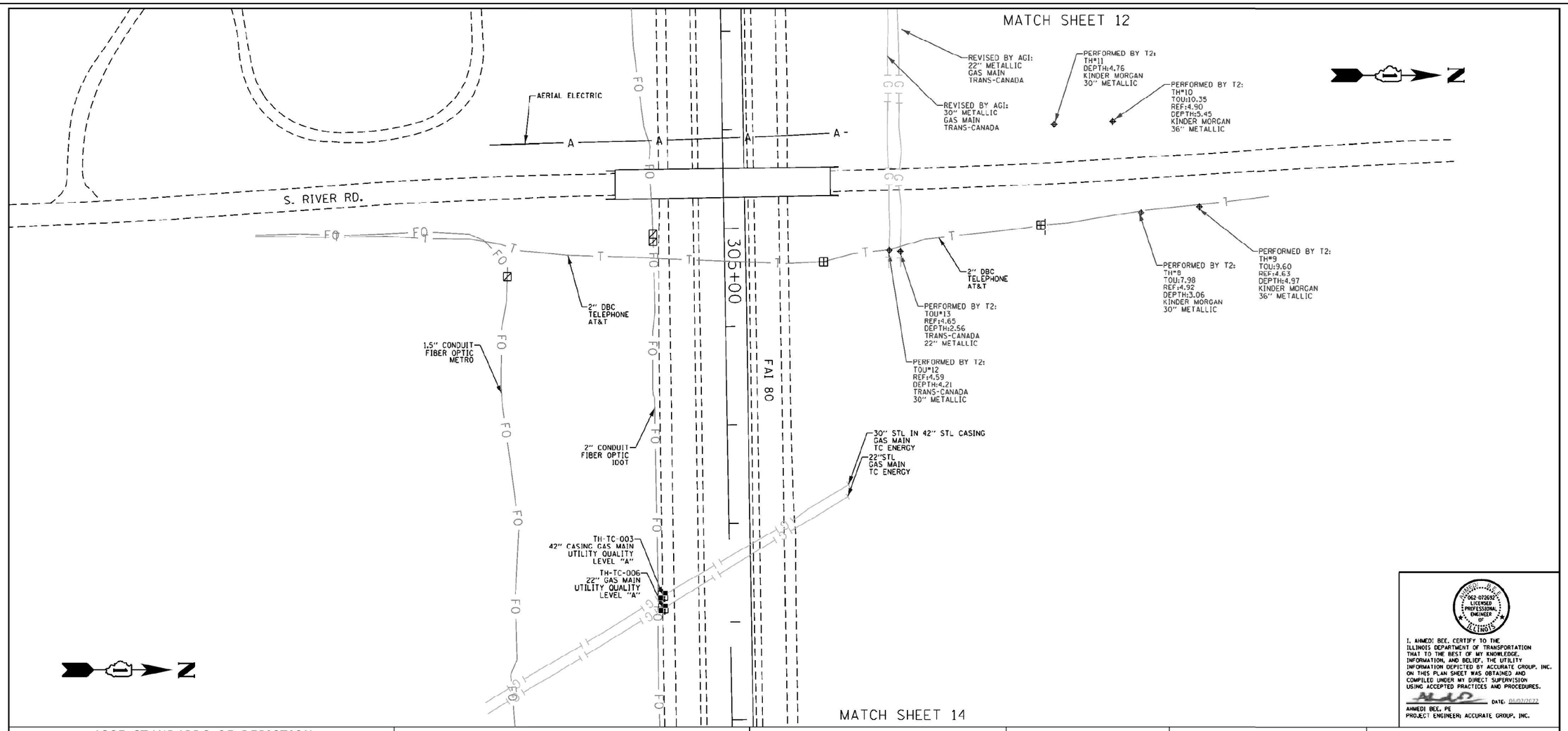

I, AHMED BEE, CERTIFY TO THE ILLINOIS DEPARTMENT OF TRANSPORTATION THAT TO THE BEST OF MY KNOWLEDGE, INFORMATION, AND BELIEF, THE UTILITY INFORMATION DEPICTED BY ACCURATE GROUP, INC. ON THIS PLAN SHEET WAS OBTAINED AND COMPILED UNDER MY DIRECT SUPERVISION USING ACCEPTED PRACTICES AND PROCEDURES.

062-070692 LICENSED PROFESSIONAL ENGINEER OF ILLINOIS

DATE: 06/02/2022

AHMED BEE, PE
PROJECT ENGINEER: ACCURATE GROUP, INC.

ASCE STANDARDS OF DEPICTION OF SUBSURFACE UTILITIES

QUALITY LEVEL A (QLA)
PRECISE HORIZONTAL AND VERTICAL LOCATION OF UTILITIES OBTAINED BY THE ACTUAL EXPOSURE (OR VERIFICATION OF PREVIOUSLY EXPOSED AND SURVEYED UTILITIES) USING MINIMALLY INTRUSIVE EXCAVATION EQUIPMENT TO MINIMIZE POTENTIAL FOR UTILITY DAMAGE, AND SUBSEQUENT MEASUREMENT OF THE SUBSURFACE UTILITIES WITH OTHER UTILITY ATTRIBUTES SUCH AS TYPE, SIZE & MATERIAL OF UTILITY.

QUALITY LEVEL B (QLB)
INFORMATION OBTAINED THROUGH THE APPLICATION OF APPROPRIATE SURFACE GEOPHYSICAL METHODS TO DETERMINE THE EXISTENCE AND APPROXIMATE HORIZONTAL POSITION OF SUBSURFACE UTILITIES. QUALITY LEVEL B DATA SHOULD BE REPRODUCIBLE BY SURFACE GEOPHYSICS AT ANY POINT OF THEIR DEPICTION. THIS INFORMATION IS SURVEYED TO APPLICABLE TOLERANCES DEFINED BY THE PROJECT AND REDUCED ONTO PLAN DOCUMENTS.

QUALITY LEVEL C (QLC)
INFORMATION OBTAINED BY SURVEYING AND PLOTTING VISIBLE ABOVE-GROUND UTLITY FEATURES AND BY USING PROFESSIONAL JUDGEMENT IN CORRELATING THIS INFORMATION TO QUALITY LEVEL D INFORMATION.

QUALITY LEVEL D (QLD)
INFORMATION DERIVED FROM EXISTING RECORDS OR ORAL RECOLLECTIONS.

GENERAL NOTES:

WGI INC. HAS EXERCISED ITS BEST PROFESSIONAL EXPERTISE AND GEOPHYSICAL PROSPECTING TECHNIQUES TO DEVELOP THIS MAPPING OF SUBSURFACE UTILITIES WITHIN THE PROJECT LIMITS.

WGI INC. DOES NOT GUARANTEE THAT UTILITIES SHOWN COMPRISE ALL UTILITIES WITHIN THE PROJECT AREA.

WGI's SUE QLB INVESTIGATION WAS PERFORMED 01/06/2019 THROUGH 02/14/2020. SUE QLA INVESTIGATION WAS FERFORMED 11/02/2021 THROUGH 11/12/2021. CHANGES TO UTILITIES AFTER THESE DATES MAY HAVE BEEN MADE AND THEREFORE MAY RESULT IN VARIANCES FROM THIS PLAN IF DEEMED ADVISABLE PRIOR TO FINAL DESIGN AND CONSTRUCTION.

UNLESS OTHERWISE NOTED, FIELD LOCATED UTILITIES MEET THE CI/ASCE 38-2 DEFINITION FOR QUALITY LEVEL "A" (QLA) AND QUALITY LEVEL "B" (QLB) STANDARDS.

WGI INC. DISCLAIMER: WGI RECOMMENDS SUE QUALITY LEVEL "A" AT ANY LOCATION WHERE A MORE ACCURATE DEPICTION OF THE UTILITY IS REQUIRED BY IDOT.

UTILITY LEGEND:

- A — AERIAL
- UNKNOWN UTILITY
- O — OIL (PETROLEUM)
- CTV — CABLE TV
- T — TELEPHONE
- FO — FIBER OPTIC
- G — GAS
- E — ELECTRIC
- TS — TRAFFIC SIGNAL/LIGHTING
- W — WATER
- SANITARY SEWER
- S — STORM SEWER
- TEST HOLE
- ED — ELECTRONIC DEPTH

JOHN J. BELLIS
062-044796
REGISTERED PROFESSIONAL ENGINEER OF ILLINOIS

signature

date

license expires 02/28/2022

AMERICAN SURVEYING & ENGINEERING, P.C.
American Surveying & Engineering, P.C.
30 N. LaSalle St., Suite 3440
Chicago, IL 60602
Phone No. (312) 277-2000

Accurate GROUP, INC.
Accurate Group, Inc.
101 Schekter Road, Suite 200b
Lincolnshire, IL 60069
Phone No. (847) 613-1100

WGI
2001 Butterfield Road, Suite 410
Downers Grove, IL 60515
Phone No. (630) 307-3800
Fax No. (630) 307-7030
Cert No. 6091 - LB No. 7055

USER NAME = malkufahy	DESIGNED -	REVISED - 06/02/2022-AB-AGI	
	DRAWN - EM	REVISED -	
PLOT SCALE = 100.000 ' / in.	CHECKED - FG	REVISED -	
PLOT DATE = 6/2/2022	DATE -	REVISED -	

STATE OF ILLINOIS
DEPARTMENT OF TRANSPORTATION

I-80 FROM RIDGE RD. TO ROCK RUN CREEK
JOLIET, ILLINOIS

SCALE: | SHEET 13 OF 25 SHEETS | STA. TO STA.

F.A. RTE.	SECTION	COUNTY	TOTAL SHEETS	SHEET NO.
		WILL	25	13
		CONTRACT NO. 62N31		
		ILLINOIS	FED. AID PROJECT	

IDOT W.O. 211 & 502

exp.

USER NAME = SALASL	DESIGNED - CMA	REVISED -	
	DRAWN - CMA	REVISED -	
PLOT SCALE = 0.16666667 ' / IN.	CHECKED - BRH	REVISED -	
PLOT DATE = 11/12/2025	DATE - 11/12/2025	REVISED -	

STATE OF ILLINOIS
DEPARTMENT OF TRANSPORTATION

I-80
SUE UTILITIES

SCALE: NTS | SHEET OF SHEETS | STA. TO STA.

F.A.I. RTE.	SECTION	COUNTY	TOTAL SHEETS	SHEET NO.
80	FAI 80 21 VLS	VARIOUS	467	63
		CONTRACT NO. 62R19		
		ILLINOIS	FED. AID PROJECT	

MODEL: 2D SHEET H
FILE NAME: C:\TRANSYSTEMS\PW LOCAL\TRANSYSTEMS-PW-01\DMS31451\62R19-SHT-SUE-14.DGN

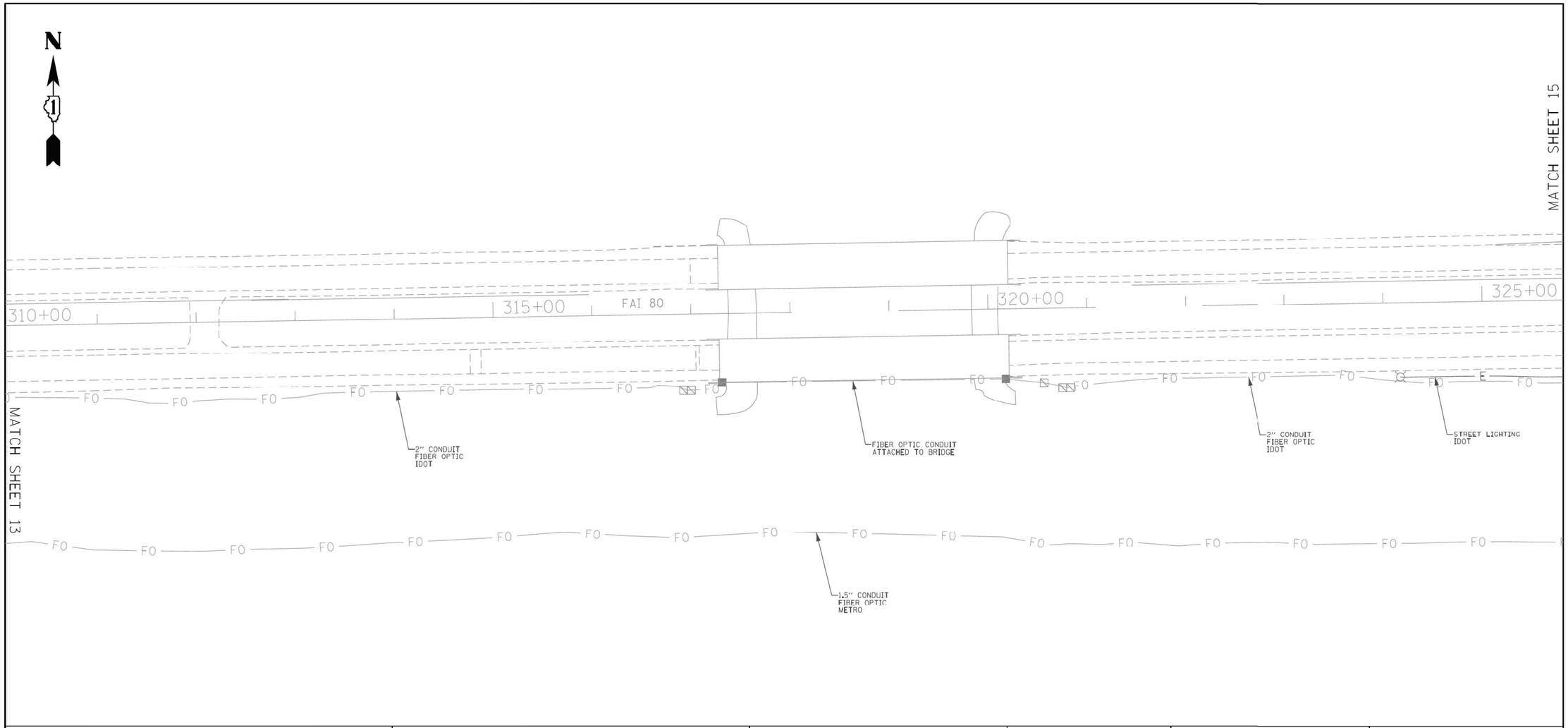

ASCE STANDARDS OF DEPICTION OF SUBSURFACE UTILITIES

QUALITY LEVEL A (QLA)
PRECISE HORIZONTAL AND VERTICAL LOCATION OF UTILITIES OBTAINED BY THE ACTUAL EXPOSURE (OR VERIFICATION OF PREVIOUSLY EXPOSED AND SURVEYED UTILITIES) USING MINIMALLY INTRUSIVE EXCAVATION EQUIPMENT TO MINIMIZE POTENTIAL FOR UTILITY DAMAGE, AND SUBSEQUENT MEASUREMENT OF THE SUBSURFACE UTILITIES WITH OTHER UTILITY ATTRIBUTES SUCH AS TYPE, SIZE & MATERIAL OF UTILITY.

QUALITY LEVEL B (QLB)
INFORMATION OBTAINED THROUGH THE APPLICATION OF APPROPRIATE SURFACE GEOPHYSICAL METHODS TO DETERMINE THE EXISTENCE AND APPROXIMATE HORIZONTAL POSITION OF SUBSURFACE UTILITIES. QUALITY LEVEL B DATA SHOULD BE REPRODUCIBLE BY SURFACE GEOPHYSICS AT ANY POINT OF THEIR DEPICTION. THIS INFORMATION IS SURVEYED TO APPLICABLE TOLERANCES DEFINED BY THE PROJECT AND REDUCED ONTO PLAN DOCUMENTS.

QUALITY LEVEL C (QLC)
INFORMATION OBTAINED BY SURVEYING AND PLOTTING VISIBLE ABOVE-GROUND UTLITY FEATURES AND BY USING PROFESSIONAL JUDGEMENT IN CORRELATING THIS INFORMATION TO QUALITY LEVEL D INFORMATION.

QUALITY LEVEL D (QLD)
INFORMATION DERIVED FROM EXISTING RECORDS OR ORAL RECOLLECTIONS.

GENERAL NOTES:

WGI INC. HAS EXERCISED ITS BEST PROFESSIONAL EXPERTISE AND GEOPHYSICAL PROSPECTING TECHNIQUES TO DEVELOP THIS MAPPING OF SUBSURFACE UTILITIES WITHIN THE PROJECT LIMITS.

WGI INC. DOES NOT GUARANTEE THAT UTILITIES SHOWN COMPRISE ALL UTILITIES WITHIN THE PROJECT AREA.

WGI's SUE QLB INVESTIGATION WAS PERFORMED 01/06/2019 THROUGH 02/14/2020. SUE QLA INVESTIGATION WAS PERFORMED 11/02/2021 THROUGH 11/12/2021. CHANGES TO UTILITIES AFTER THESE DATES MAY HAVE BEEN MADE AND THEREFORE MAY RESULT IN VARIANCES FROM THIS PLAN IF DEEMED ADVISABLE PRIOR TO FINAL DESIGN AND CONSTRUCTION.

UNLESS OTHERWISE NOTED, FIELD LOCATED UTILITIES MEET THE C1/ASCE 38-2 DEFINITION FOR QUALITY LEVEL "A" (QLA) AND QUALITY LEVEL "B" (QLB) STANDARDS.

WGI INC. DISCLAIMER: WGI RECOMMENDS SUE QUALITY LEVEL "A" AT ANY LOCATION WHERE A MORE ACCURATE DEPICTION OF THE UTILITY IS REQUIRED BY IDOT.

UTILITY LEGEND:

- A — AERIAL
- UNKNOWN UTILITY
- O — OIL (PETROLEUM)
- CTV — CABLE TV
- T — TELEPHONE
- FO — FIBER OPTIC
- G — GAS
- E — ELECTRIC
- E — TRAFFIC SIGNAL/LIGHTING
- W — WATER
- SANITARY SEWER
- S — STORM SEWER
- TEST HOLE
- ED — ELECTRONIC DEPTH

JOHN J. BELLIS
062-044796
REGISTERED PROFESSIONAL ENGINEER OF ILLINOIS

John J Bellis
signature

12/14/2021
date

license expires 02/28/2022

AMERICAN SURVEYING & ENGINEERING, P.C.
American Surveying & Engineering, P.C.
30 N. LaSalle St., Suite 3440
Chicago, IL 60602
Phone No. (312) 277-2000

Accurate GROUP, INC.
Accurate Group, Inc.
101 Schekter Road, Suite 200b
Lincolnshire, IL 60069
Phone No. (847) 613-1100

WGI
2001 Butterfield Road, Suite 410
Downers Grove, IL 60515
Phone No. (630) 307-3800
Fax No. (630) 307-7030
Cert No. 6091 - LB No. 7055

USER NAME = Erick.Maleza	DESIGNED -	REVISED -	
	DRAWN - EM	REVISED -	
PLOT SCALE = 100.0000 ' / in.	CHECKED - EG	REVISED -	
PLOT DATE = 12/10/2021	DATE -	REVISED -	

STATE OF ILLINOIS
DEPARTMENT OF TRANSPORTATION

I-80 FROM RIDGE RD. TO ROCK RUN CREEK
JOLIET, ILLINOIS

SCALE: | SHEET 14 OF 25 SHEETS | STA. | TO STA.

F.A. RTE.	SECTION	COUNTY	TOTAL SHEETS	SHEET NO.
		WILL	25	14
		CONTRACT NO. 62N31		
		ILLINOIS	FED. AID PROJECT	

IDOT W.O. 211 & 502

exp.

USER NAME = SALASL	DESIGNED - CMA	REVISED -	
	DRAWN - CMA	REVISED -	
PLOT SCALE = 0.16666667 ' / IN.	CHECKED - BRH	REVISED -	
PLOT DATE = 11/12/2025	DATE - 11/12/2025	REVISED -	

STATE OF ILLINOIS
DEPARTMENT OF TRANSPORTATION

I-80
SUE UTILITIES

SCALE: NTS | SHEET OF SHEETS | STA. | TO STA.

F.A.I. RTE.	SECTION	COUNTY	TOTAL SHEETS	SHEET NO.
80	FAI 80 21 VLS	VARIOUS	467	64
		CONTRACT NO. 62R19		
		ILLINOIS	FED. AID PROJECT	

MODEL: 2D SHEET H
FILE NAME: C:\TRANSYSTEMS\PW LOCAL\TRANSYSTEMS-PW-01\DMS31451\62R19-SHT-SUE-15.DGN

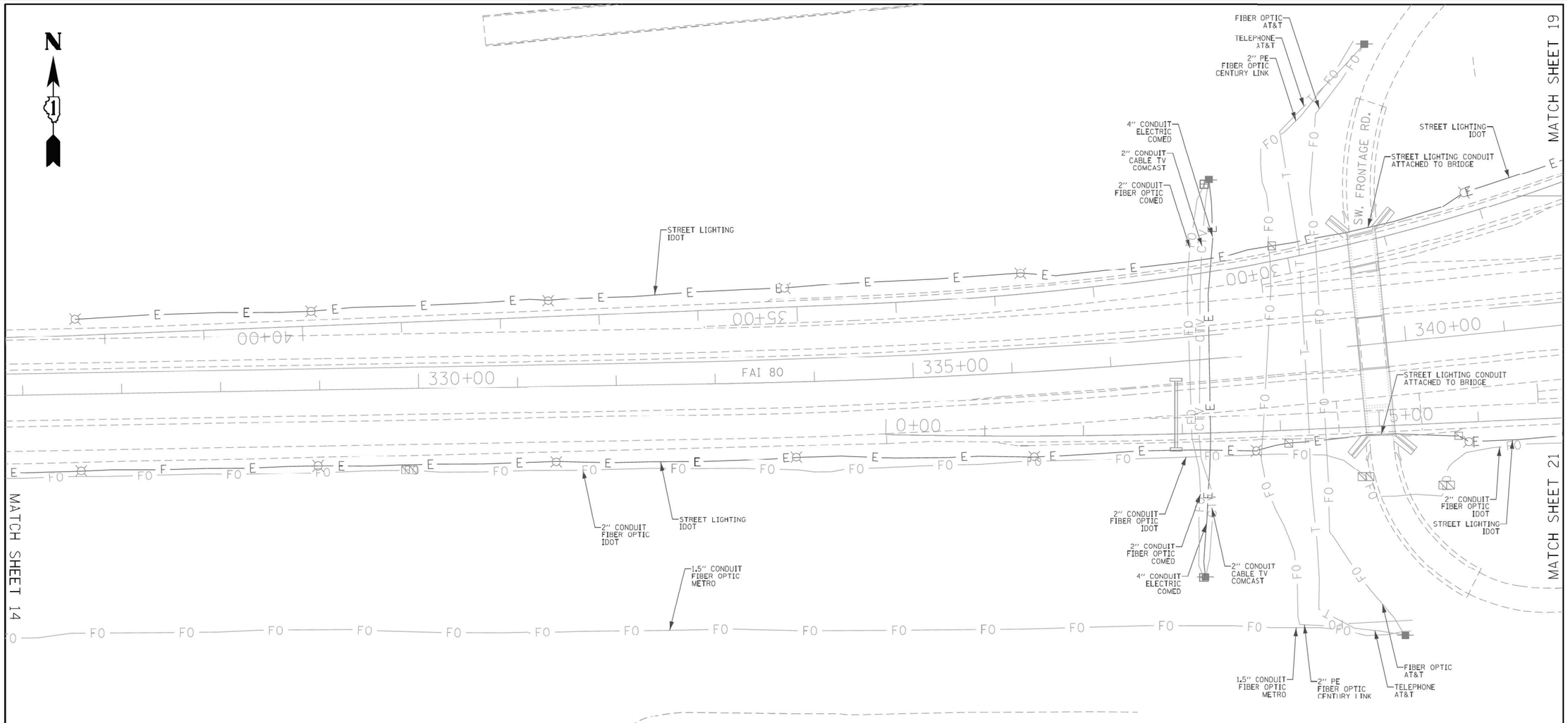

ASCE STANDARDS OF DEPICTION OF SUBSURFACE UTILITIES

QUALITY LEVEL A (QLA)
PRECISE HORIZONTAL AND VERTICAL LOCATION OF UTILITIES OBTAINED BY THE ACTUAL EXPOSURE (OR VERIFICATION OF PREVIOUSLY EXPOSED AND SURVEYED UTILITIES) USING MINIMALLY INTRUSIVE EXCAVATION EQUIPMENT TO MINIMIZE POTENTIAL FOR UTILITY DAMAGE, AND SUBSEQUENT MEASUREMENT OF THE SUBSURFACE UTILITIES WITH OTHER UTILITY ATTRIBUTES SUCH AS TYPE, SIZE & MATERIAL OF UTILITY.

QUALITY LEVEL B (QLB)
INFORMATION OBTAINED THROUGH THE APPLICATION OF APPROPRIATE SURFACE GEOPHYSICAL METHODS TO DETERMINE THE EXISTENCE AND APPROXIMATE HORIZONTAL POSITION OF SUBSURFACE UTILITIES. QUALITY LEVEL B DATA SHOULD BE REPRODUCIBLE BY SURFACE GEOPHYSICS AT ANY POINT OF THEIR DEPICTION. THIS INFORMATION IS SURVEYED TO APPLICABLE TOLERANCES DEFINED BY THE PROJECT AND REDUCED ONTO PLAN DOCUMENTS.

QUALITY LEVEL C (QLC)
INFORMATION OBTAINED BY SURVEYING AND PLOTTING VISIBLE ABOVE-GROUND UTLITY FEATURES AND BY USING PROFESSIONAL JUDGEMENT IN CORRELATING THIS INFORMATION TO QUALITY LEVEL D INFORMATION.

QUALITY LEVEL D (QLD)
INFORMATION DERIVED FROM EXISTING RECORDS OR ORAL RECOLLECTIONS.

GENERAL NOTES:

WGI INC. HAS EXERCISED ITS BEST PROFESSIONAL EXPERTISE AND GEOPHYSICAL PROSPECTING TECHNIQUES TO DEVELOP THIS MAPPING OF SUBSURFACE UTILITIES WITHIN THE PROJECT LIMITS.

WGI INC. DOES NOT GUARANTEE THAT UTILITIES SHOWN COMPRISE ALL UTILITIES WITHIN THE PROJECT AREA.

WGI's SUE QLB INVESTIGATION WAS PERFORMED 01/06/2019 THROUGH 02/14/2020. SUE QLA INVESTIGATION WAS PERFORMED 11/02/2021 THROUGH 11/12/2021. CHANGES TO UTILITIES AFTER THESE DATES MAY HAVE BEEN MADE AND THEREFORE MAY RESULT IN VARIANCES FROM THIS PLAN IF DEEMED ADVISABLE PRIOR TO FINAL DESIGN AND CONSTRUCTION.

UNLESS OTHERWISE NOTED, FIELD LOCATED UTILITIES MEET THE CI/ASCE 38-2 DEFINITION FOR QUALITY LEVEL "A" (QLA) AND QUALITY LEVEL "B" (QLB) STANDARDS.

WGI INC. DISCLAIMER: WGI RECOMMENDS SUE QUALITY LEVEL "A" AT ANY LOCATION WHERE A MORE ACCURATE DEPICTION OF THE UTILITY IS REQUIRED BY IDOT.

UTILITY LEGEND:

- A — AERIAL
- UNKNOWN UTILITY
- O — OIL (PETROLEUM)
- CTV — CABLE TV
- T — TELEPHONE
- FO — FIBER OPTIC
- G — GAS
- E — ELECTRIC
- E — TRAFFIC SIGNAL/LIGHTING
- W — WATER
- SANITARY SEWER
- S — STORM SEWER
- TEST HOLE
- ED — ELECTRONIC DEPTH

JOHN J. BELLIS
062-044796
REGISTERED PROFESSIONAL ENGINEER OF ILLINOIS

John J Bellis
signature

12/14/2021
date

license expires 02/28/2022

AMERICAN SURVEYING & ENGINEERING, P.C.
American Surveying & Engineering, P.C.
30 N. LaSalle St., Suite 3440
Chicago, IL 60602
Phone No. (312) 277-2000

Accurate GROUP, INC.
Accurate Group, Inc.
101 Schekter Road, Suite 200b
Lincolnshire, IL 60069
Phone No. (847) 613-1100

WGI
2001 Butterfield Road, Suite 410
Downers Grove, IL 60515
Phone No. (630) 307-3800
Fax No. (630) 307-7030
Cert No. 6091 - LB No. 7055

USER NAME = Erick.Maleza	DESIGNED -	REVISED -	
	DRAWN - EM	REVISED -	
PLOT SCALE = 100.0000 ' / in.	CHECKED - EG	REVISED -	
PLOT DATE = 12/10/2021	DATE -	REVISED -	

STATE OF ILLINOIS
DEPARTMENT OF TRANSPORTATION

I-80 FROM RIDGE RD. TO ROCK RUN CREEK
JOLIET, ILLINOIS

SCALE: | SHEET 15 OF 25 SHEETS | STA. | TO STA.

F.A. RTE.	SECTION	COUNTY	TOTAL SHEETS	SHEET NO.
		WILL	25	15
		CONTRACT NO. 62N31		
		ILLINOIS	FED. AID PROJECT	

IDOT W.O. 211 & 502

exp.

USER NAME = SALASL	DESIGNED - CMA	REVISED -	
	DRAWN - CMA	REVISED -	
PLOT SCALE = 0.16666667 ' / IN.	CHECKED - BRH	REVISED -	
PLOT DATE = 11/12/2025	DATE - 11/12/2025	REVISED -	

STATE OF ILLINOIS
DEPARTMENT OF TRANSPORTATION

I-80
SUE UTILITIES

SCALE: NTS | SHEET OF SHEETS | STA. | TO STA.

F.A.I. RTE.	SECTION	COUNTY	TOTAL SHEETS	SHEET NO.
80	FAI 80 21 VLS	VARIOUS	467	65
		CONTRACT NO. 62R19		
		ILLINOIS	FED. AID PROJECT	

MODEL: 2D SHEET H
FILE NAME: C:\TRANSYSTEMS\PW_LOCAL\TRANSYSTEMS-PW-01\DMS31451\62R19-SHT-SUE-16.DGN

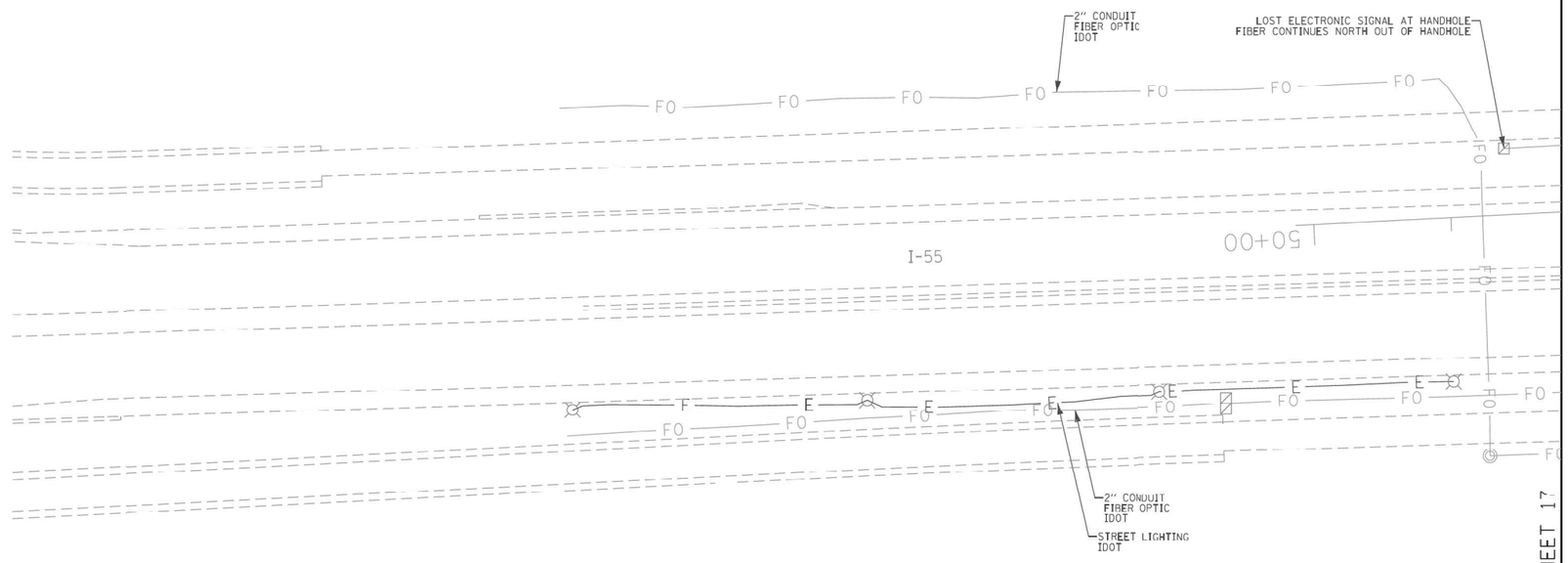

MATCH SHEET 17

ASCE STANDARDS OF DEPICTION OF SUBSURFACE UTILITIES

QUALITY LEVEL A (QLA)
PRECISE HORIZONTAL AND VERTICAL LOCATION OF UTILITIES OBTAINED BY THE ACTUAL EXPOSURE (OR VERIFICATION OF PREVIOUSLY EXPOSED AND SURVEYED UTILITIES) USING MINIMALLY INTRUSIVE EXCAVATION EQUIPMENT TO MINIMIZE POTENTIAL FOR UTILITY DAMAGE, AND SUBSEQUENT MEASUREMENT OF THE SUBSURFACE UTILITIES WITH OTHER UTILITY ATTRIBUTES SUCH AS TYPE, SIZE & MATERIAL OF UTILITY.

QUALITY LEVEL B (QLB)
INFORMATION OBTAINED THROUGH THE APPLICATION OF APPROPRIATE SURFACE GEOPHYSICAL METHODS TO DETERMINE THE EXISTENCE AND APPROXIMATE HORIZONTAL POSITION OF SUBSURFACE UTILITIES. QUALITY LEVEL B DATA SHOULD BE REPRODUCIBLE BY SURFACE GEOPHYSICS AT ANY POINT OF THEIR DEPICTION. THIS INFORMATION IS SURVEYED TO APPLICABLE TOLERANCES DEFINED BY THE PROJECT AND REDUCED ONTO PLAN DOCUMENTS.

QUALITY LEVEL C (QLC)
INFORMATION OBTAINED BY SURVEYING AND PLOTTING VISIBLE ABOVE-GROUND UTILITY FEATURES AND BY USING PROFESSIONAL JUDGEMENT IN CORRELATING THIS INFORMATION TO QUALITY LEVEL D INFORMATION.

QUALITY LEVEL D (QLD)
INFORMATION DERIVED FROM EXISTING RECORDS OR ORAL RECOLLECTIONS.

GENERAL NOTES:

WGI INC. HAS EXERCISED ITS BEST PROFESSIONAL EXPERTISE AND GEOPHYSICAL PROSPECTING TECHNIQUES TO DEVELOP THIS MAPPING OF SUBSURFACE UTILITIES WITHIN THE PROJECT LIMITS.

WGI INC. DOES NOT GUARANTEE THAT UTILITIES SHOWN COMPRISE ALL UTILITIES WITHIN THE PROJECT AREA.

WGI's SUE QLB INVESTIGATION WAS PERFORMED 01/06/2019 THROUGH 02/14/2020. SUE QLA INVESTIGATION WAS PERFORMED 11/02/2021 THROUGH 11/12/2021. CHANGES TO UTILITIES AFTER THESE DATES MAY HAVE BEEN MADE AND THEREFORE MAY RESULT IN VARIANCES FROM THIS PLAN IF DEEMED ADVISABLE PRIOR TO FINAL DESIGN AND CONSTRUCTION.

UNLESS OTHERWISE NOTED, FIELD LOCATED UTILITIES MEET THE CI/ASCE 38-2 DEFINITION FOR QUALITY LEVEL "A" (QLA) AND QUALITY LEVEL "B" (QLB) STANDARDS.

WGI INC. DISCLAIMER: WGI RECOMMENDS SUE QUALITY LEVEL "A" AT ANY LOCATION WHERE A MORE ACCURATE DEPICTION OF THE UTILITY IS REQUIRED BY IDOT.

UTILITY LEGEND:

- A — *AERIAL*
- *UNKNOWN UTILITY*
- O — *OIL (PETROLEUM)*
- CTV — *CABLE TV*
- T — *TELEPHONE*
- FO — *FIBER OPTIC*
- G — *GAS*
- E — *ELECTRIC*
- E — *TRAFFIC SIGNAL/LIGHTING*
- W — *WATER*
- *SANITARY SEWER*
- *STORM SEWER*
- *TEST HOLE*
- ED — *ELECTRONIC DEPTH*

JOHN J. BELLIS
062-044796
REGISTERED PROFESSIONAL ENGINEER OF ILLINOIS

signature

12/14/2021
date

license expires 02/28/2022

AMERICAN SURVEYING & ENGINEERING, P.C.
American Surveying & Engineering, P.C.
30 N. LaSalle St., Suite 3440
Chicago, IL 60602
Phone No. (312) 277-2000

Accurate GROUP, INC.
Accurate Group, Inc.
101 Schekter Road, Suite 200b
Lincolnshire, IL 60069
Phone No. (847) 613-1100

WGI
2001 Butterfield Road, Suite 410
Downers Grove, IL 60515
Phone No. (630) 307-3800
Fax No. (630) 307-7030
Cert No. 6091 - LB No. 7055

USER NAME = Erick.Maleza	DESIGNED -	REVISED -	
	DRAWN - EM	REVISED -	
PLOT SCALE = 100.0000 ' / in.	CHECKED - EG	REVISED -	
PLOT DATE = 12/10/2021	DATE -	REVISED -	

STATE OF ILLINOIS
DEPARTMENT OF TRANSPORTATION

I-80 FROM RIDGE RD. TO ROCK RUN CREEK
JOLIET, ILLINOIS

SCALE: | SHEET 16 OF 25 SHEETS | STA. | TO STA.

F.A. RTE.	SECTION	COUNTY	TOTAL SHEETS	SHEET NO.
		WILL	25	16
		CONTRACT NO. 62N31		
		ILLINOIS	FED. AID PROJECT	

IDOT W.O. 211 & 502

exp.

USER NAME = SALASL	DESIGNED - CMA	REVISED -	
	DRAWN - CMA	REVISED -	
PLOT SCALE = 0.16666667 ' / IN.	CHECKED - BRH	REVISED -	
PLOT DATE = 11/12/2025	DATE - 11/12/2025	REVISED -	

STATE OF ILLINOIS
DEPARTMENT OF TRANSPORTATION

I-80
SUE UTILITIES

SCALE: NTS | SHEET OF SHEETS | STA. | TO STA.

F.A.I. RTE.	SECTION	COUNTY	TOTAL SHEETS	SHEET NO.
80	FAI 80 21 VLS	VARIOUS	467	66
		CONTRACT NO. 62R19		
		ILLINOIS	FED. AID PROJECT	

MODEL: 2D SHEET H
FILE NAME: C:\TRANSYSTEMS\PW_LOCAL\TRANSYSTEMS-PW-01\DMS31451\62R19-SHT-SUE-17.DGN

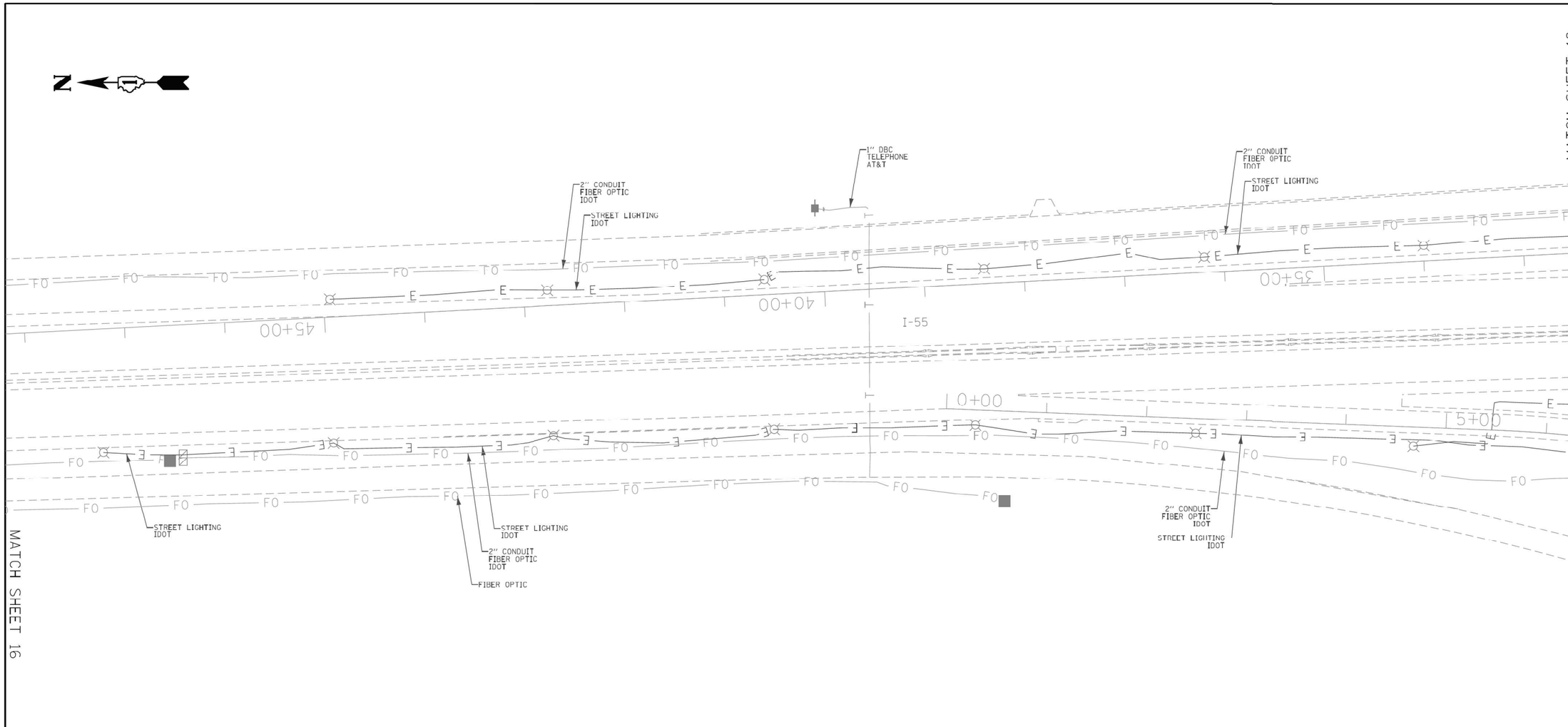

ASCE STANDARDS OF DEPICTION OF SUBSURFACE UTILITIES

QUALITY LEVEL A (QLA)
PRECISE HORIZONTAL AND VERTICAL LOCATION OF UTILITIES OBTAINED BY THE ACTUAL EXPOSURE (OR VERIFICATION OF PREVIOUSLY EXPOSED AND SURVEYED UTILITIES) USING MINIMALLY INTRUSIVE EXCAVATION EQUIPMENT TO MINIMIZE POTENTIAL FOR UTILITY DAMAGE, AND SUBSEQUENT MEASUREMENT OF THE SUBSURFACE UTILITIES WITH OTHER UTILITY ATTRIBUTES SUCH AS TYPE, SIZE & MATERIAL OF UTILITY.

QUALITY LEVEL B (QLB)
INFORMATION OBTAINED THROUGH THE APPLICATION OF APPROPRIATE SURFACE GEOPHYSICAL METHODS TO DETERMINE THE EXISTENCE AND APPROXIMATE HORIZONTAL POSITION OF SUBSURFACE UTILITIES. QUALITY LEVEL B DATA SHOULD BE REPRODUCIBLE BY SURFACE GEOPHYSICS AT ANY POINT OF THEIR DEPICTION. THIS INFORMATION IS SURVEYED TO APPLICABLE TOLERANCES DEFINED BY THE PROJECT AND REDUCED ONTO PLAN DOCUMENTS.

QUALITY LEVEL C (QLC)
INFORMATION OBTAINED BY SURVEYING AND PLOTTING VISIBLE ABOVE-GROUND UTILITY FEATURES AND BY USING PROFESSIONAL JUDGEMENT IN CORRELATING THIS INFORMATION TO QUALITY LEVEL D INFORMATION.

QUALITY LEVEL D (QLD)
INFORMATION DERIVED FROM EXISTING RECORDS OR ORAL RECOLLECTIONS.

GENERAL NOTES:

WGI INC. HAS EXERCISED ITS BEST PROFESSIONAL EXPERTISE AND GEOPHYSICAL PROSPECTING TECHNIQUES TO DEVELOP THIS MAPPING OF SUBSURFACE UTILITIES WITHIN THE PROJECT LIMITS.

WGI INC. DOES NOT GUARANTEE THAT UTILITIES SHOWN COMPRISE ALL UTILITIES WITHIN THE PROJECT AREA.

WGI's SUE QLB INVESTIGATION WAS PERFORMED 01/06/2019 THROUGH 02/14/2020. SUE QLA INVESTIGATION WAS PERFORMED 11/02/2021 THROUGH 11/12/2021. CHANGES TO UTILITIES AFTER THESE DATES MAY HAVE BEEN MADE AND THEREFORE MAY RESULT IN VARIANCES FROM THIS PLAN IF DEEMED ADVISABLE PRIOR TO FINAL DESIGN AND CONSTRUCTION.

UNLESS OTHERWISE NOTED, FIELD LOCATED UTILITIES MEET THE CI/ASCE 38-2 DEFINITION FOR QUALITY LEVEL "A" (QLA) AND QUALITY LEVEL "B" (QLB) STANDARDS.

WGI INC. DISCLAIMER: WGI RECOMMENDS SUE QUALITY LEVEL "A" AT ANY LOCATION WHERE A MORE ACCURATE DEPICTION OF THE UTILITY IS REQUIRED BY IDOT.

UTILITY LEGEND:

- A — AERIAL
- UNKNOWN UTILITY
- O — OIL (PETROLEUM)
- CTV — CABLE TV
- T — TELEPHONE
- FO — FIBER OPTIC
- G — GAS
- E — ELECTRIC
- E — TRAFFIC SIGNAL/LIGHTING
- W — WATER
- SANITARY SEWER
- S — STORM SEWER
- TEST HOLE
- ED — ELECTRONIC DEPTH

JOHN J. BELLIS
062-044796
REGISTERED PROFESSIONAL ENGINEER OF ILLINOIS

signature
12/14/2021
date
license expires 02/28/2022

AMERICAN SURVEYING & ENGINEERING, P.C.
American Surveying & Engineering, P.C.
30 N. LaSalle St., Suite 3440
Chicago, IL 60602
Phone No. (312) 277-2000

Accurate GROUP, INC.
Accurate Group, Inc.
101 Schekter Road, Suite 200b
Lincolnshire, IL 60069
Phone No. (847) 613-1100

WGI
2001 Butterfield Road, Suite 410
Downers Grove, IL 60515
Phone No. (630) 307-3800
Fax No. (630) 307-7030
Cert No. 6091 - LB No. 7055

USER NAME = Erick.Maleza	DESIGNED -	REVISED -	
	DRAWN - EM	REVISED -	
PLOT SCALE = 100.0000 ' / in.	CHECKED - EG	REVISED -	
PLOT DATE = 12/10/2021	DATE -	REVISED -	

STATE OF ILLINOIS
DEPARTMENT OF TRANSPORTATION

I-80 FROM RIDGE RD. TO ROCK RUN CREEK
JOLIET, ILLINOIS

SCALE: | SHEET 17 OF 25 SHEETS | STA. | TO STA.

F.A. RTE.	SECTION	COUNTY	TOTAL SHEETS	SHEET NO.
		WILL	25	17
		CONTRACT NO. 62N31		
		ILLINOIS	FED. AID PROJECT	

IDOT W.O. 211 & 502

exp.

USER NAME = SALASL	DESIGNED - CMA	REVISED -	
	DRAWN - CMA	REVISED -	
PLOT SCALE = 0.16666667 ' / IN.	CHECKED - BRH	REVISED -	
PLOT DATE = 11/12/2025	DATE - 11/12/2025	REVISED -	

STATE OF ILLINOIS
DEPARTMENT OF TRANSPORTATION

I-80
SUE UTILITIES

SCALE: NTS | SHEET OF SHEETS | STA. | TO STA.

F.A.I. RTE.	SECTION	COUNTY	TOTAL SHEETS	SHEET NO.
80	FAI 80 21 VLS	VARIOUS	467	67
		CONTRACT NO. 62R19		
		ILLINOIS	FED. AID PROJECT	

MODEL: 2D SHEET H
FILE NAME: C:\TRANSYSTEMS\PW_LOCAL\TRANSYSTEMS-PW-01\DMS31451\62R19-SHT-SUE-18.DGN

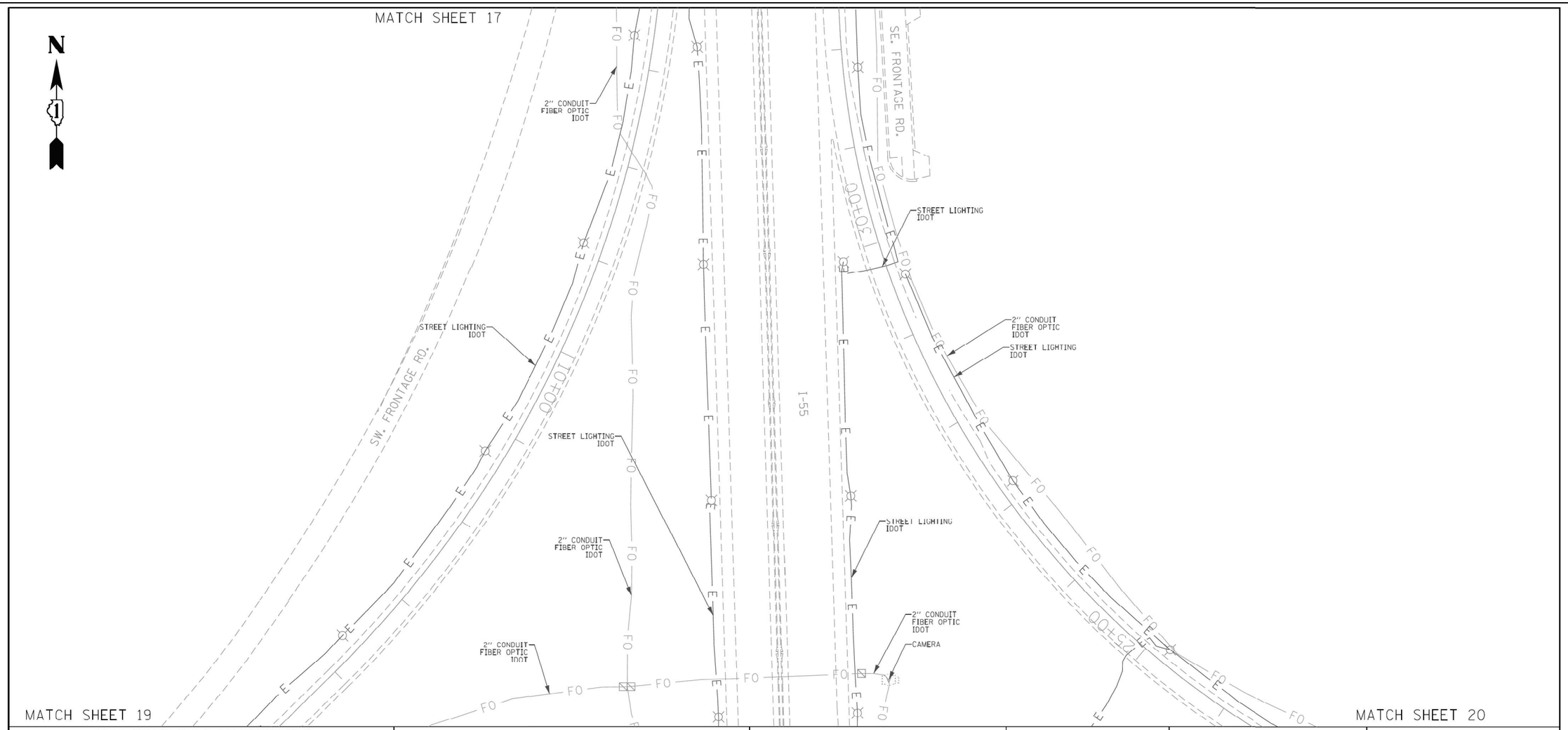

ASCE STANDARDS OF DEPICTION OF SUBSURFACE UTILITIES

QUALITY LEVEL A (QLA)
PRECISE HORIZONTAL AND VERTICAL LOCATION OF UTILITIES OBTAINED BY THE ACTUAL EXPOSURE (OR VERIFICATION OF PREVIOUSLY EXPOSED AND SURVEYED UTILITIES) USING MINIMALLY INTRUSIVE EXCAVATION EQUIPMENT TO MINIMIZE POTENTIAL FOR UTILITY DAMAGE, AND SUBSEQUENT MEASUREMENT OF THE SUBSURFACE UTILITIES WITH OTHER UTILITY ATTRIBUTES SUCH AS TYPE, SIZE & MATERIAL OF UTILITY.

QUALITY LEVEL B (QLB)
INFORMATION OBTAINED THROUGH THE APPLICATION OF APPROPRIATE SURFACE GEOPHYSICAL METHODS TO DETERMINE THE EXISTENCE AND APPROXIMATE HORIZONTAL POSITION OF SUBSURFACE UTILITIES. QUALITY LEVEL B DATA SHOULD BE REPRODUCIBLE BY SURFACE GEOPHYSICS AT ANY POINT OF THEIR DEPICTION. THIS INFORMATION IS SURVEYED TO APPLICABLE TOLERANCES DEFINED BY THE PROJECT AND REDUCED ONTO PLAN DOCUMENTS.

QUALITY LEVEL C (QLC)
INFORMATION OBTAINED BY SURVEYING AND PLOTTING VISIBLE ABOVE-GROUND UTLITY FEATURES AND BY USING PROFESSIONAL JUDGEMENT IN CORRELATING THIS INFORMATION TO QUALITY LEVEL D INFORMATION.

QUALITY LEVEL D (OLD)
INFORMATION DERIVED FROM EXISTING RECORDS OR ORAL RECOLLECTIONS.

GENERAL NOTES:

WGI INC. HAS EXERCISED ITS BEST PROFESSIONAL EXPERTISE AND GEOPHYSICAL PROSPECTING TECHNIQUES TO DEVELOP THIS MAPPING OF SUBSURFACE UTILITIES WITHIN THE PROJECT LIMITS.

WGI INC. DOES NOT GUARANTEE THAT UTILITIES SHOWN COMPRISE ALL UTILITIES WITHIN THE PROJECT AREA.

WGI's SUE QLB INVESTIGATION WAS PERFORMED 01/06/2019 THROUGH 02/14/2020. SUE QLA INVESTIGATION WAS PERFORMED 11/02/2021 THROUGH 11/12/2021. CHANGES TO UTILITIES AFTER THESE DATES MAY HAVE BEEN MADE AND THEREFORE MAY RESULT IN VARIANCES FROM THIS PLAN IF DEEMED ADVISABLE PRIOR TO FINAL DESIGN AND CONSTRUCTION.

UNLESS OTHERWISE NOTED, FIELD LOCATED UTILITIES MEET THE CI/ASCE 38-2 DEFINITION FOR QUALITY LEVEL "A" (QLA) AND QUALITY LEVEL "B" (QLB) STANDARDS.

WGI INC. DISCLAIMER: WGI RECOMMENDS SUE QUALITY LEVEL "A" AT ANY LOCATION WHERE A MORE ACCURATE DEPICTION OF THE UTILITY IS REQUIRED BY IDOT.

UTILITY LEGEND:

- A — AERIAL
- UNKNOWN UTILITY
- O — OIL (PETROLEUM)
- CTV — CABLE TV
- T — TELEPHONE
- FO — FIBER OPTIC
- G — GAS
- E — ELECTRIC
- E — TRAFFIC SIGNAL/LIGHTING
- W — WATER
- SANITARY SEWER
- S — STORM SEWER
- TEST HOLE
- ED — ELECTRONIC DEPTH

JOHN J. BELLIS
062-044796
REGISTERED PROFESSIONAL ENGINEER OF ILLINOIS

John J Bellis
signature

12/14/2021
date

license expires 02/28/2022

AMERICAN SURVEYING & ENGINEERING, P.C.
American Surveying & Engineering, P.C.
30 N. LaSalle St., Suite 3440
Chicago, IL 60602
Phone No. (312) 277-2000

Accurate GROUP, INC.
Accurate Group, Inc.
101 Schekter Road, Suite 200b
Lincolnshire, IL 60069
Phone No. (847) 613-1100

WGI
2001 Butterfield Road, Suite 410
Downers Grove, IL 60515
Phone No. (630) 307-3800
Fax No. (630) 307-7030
Cert No. 6091 - LB No. 7055

USER NAME = Erick.Maleza	DESIGNED -	REVISED -	
	DRAWN - EM	REVISED -	
PLOT SCALE = 100.0000 ' / in.	CHECKED - EG	REVISED -	
PLOT DATE = 12/10/2021	DATE -	REVISED -	

STATE OF ILLINOIS
DEPARTMENT OF TRANSPORTATION

I-80 FROM RIDGE RD. TO ROCK RUN CREEK
JOLIET, ILLINOIS

SCALE: | SHEET 18 OF 25 SHEETS | STA. | TO STA.

F.A. RTE.	SECTION	COUNTY	TOTAL SHEETS	SHEET NO.
		WILL	25	18
		CONTRACT NO. 62N31		
		ILLINOIS	FED. AID PROJECT	

IDOT W.O. 211 & 502

exp.

USER NAME = SALASL	DESIGNED - CMA	REVISED -	
	DRAWN - CMA	REVISED -	
PLOT SCALE = 0.16666667 ' / IN.	CHECKED - BRH	REVISED -	
PLOT DATE = 11/12/2025	DATE - 11/12/2025	REVISED -	

STATE OF ILLINOIS
DEPARTMENT OF TRANSPORTATION

I-80
SUE UTILITIES

SCALE: NTS | SHEET OF SHEETS | STA. | TO STA.

F.A.I. RTE.	SECTION	COUNTY	TOTAL SHEETS	SHEET NO.
80	FAI 80 21 VLS	VARIOUS	467	68
		CONTRACT NO. 62R19		
		ILLINOIS	FED. AID PROJECT	

MODEL: 2D SHEET H
FILE NAME: C:\TRANSYSTEMS\PW_LOCAL\TRANSYSTEMS-PW-01\DMS31451\62R19-SHT-SUE-19.DGN

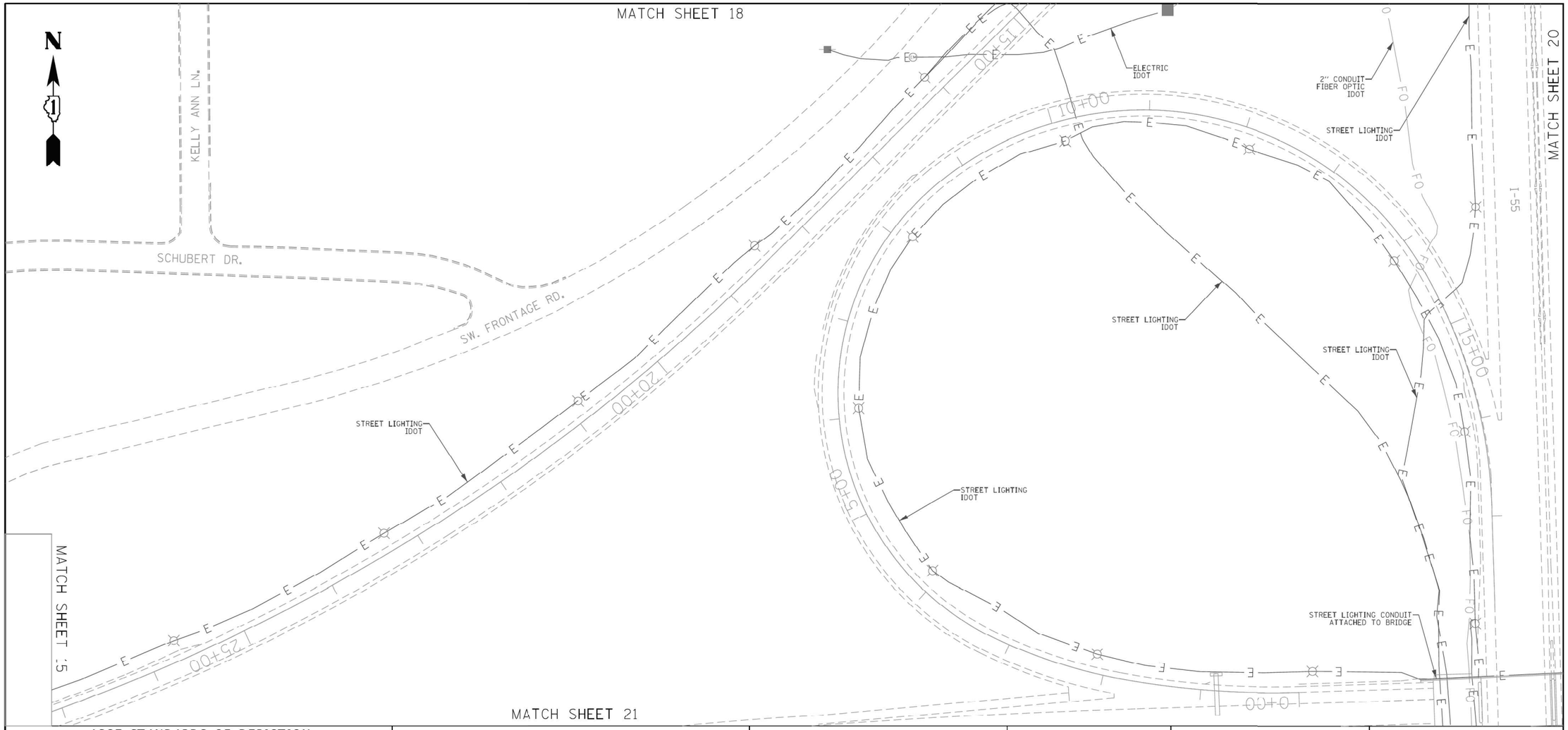

ASCE STANDARDS OF DEPICTION OF SUBSURFACE UTILITIES

QUALITY LEVEL A (QLA)
PRECISE HORIZONTAL AND VERTICAL LOCATION OF UTILITIES OBTAINED BY THE ACTUAL EXPOSURE (OR VERIFICATION OF PREVIOUSLY EXPOSED AND SURVEYED UTILITIES) USING MINIMALLY INTRUSIVE EXCAVATION EQUIPMENT TO MINIMIZE POTENTIAL FOR UTILITY DAMAGE, AND SUBSEQUENT MEASUREMENT OF THE SUBSURFACE UTILITIES WITH OTHER UTILITY ATTRIBUTES SUCH AS TYPE, SIZE & MATERIAL OF UTILITY.

QUALITY LEVEL B (QLB)
INFORMATION OBTAINED THROUGH THE APPLICATION OF APPROPRIATE SURFACE GEOPHYSICAL METHODS TO DETERMINE THE EXISTENCE AND APPROXIMATE HORIZONTAL POSITION OF SUBSURFACE UTILITIES. QUALITY LEVEL B DATA SHOULD BE REPRODUCIBLE BY SURFACE GEOPHYSICS AT ANY POINT OF THEIR DEPICTION. THIS INFORMATION IS SURVEYED TO APPLICABLE TOLERANCES DEFINED BY THE PROJECT AND REDUCED ONTO PLAN DOCUMENTS.

QUALITY LEVEL C (QLC)
INFORMATION OBTAINED BY SURVEYING AND PLOTTING VISIBLE ABOVE-GROUND UTLITY FEATURES AND BY USING PROFESSIONAL JUDGEMENT IN CORRELATING THIS INFORMATION TO QUALITY LEVEL D INFORMATION.

QUALITY LEVEL D (QLD)
INFORMATION DERIVED FROM EXISTING RECORDS OR ORAL RECOLLECTIONS.

GENERAL NOTES:

WGI INC. HAS EXERCISED ITS BEST PROFESSIONAL EXPERTISE AND GEOPHYSICAL PROSPECTING TECHNIQUES TO DEVELOP THIS MAPPING OF SUBSURFACE UTILITIES WITHIN THE PROJECT LIMITS.

WGI INC. DOES NOT GUARANTEE THAT UTILITIES SHOWN COMPRISE ALL UTILITIES WITHIN THE PROJECT AREA.

WGI's SUE QLB INVESTIGATION WAS PERFORMED 01/06/2019 THROUGH 02/14/2020. SUE QLA INVESTIGATION WAS PERFORMED 11/02/2021 THROUGH 11/12/2021. CHANGES TO UTILITIES AFTER THESE DATES MAY HAVE BEEN MADE AND THEREFORE MAY RESULT IN VARIANCES FROM THIS PLAN IF DEEMED ADVISABLE PRIOR TO FINAL DESIGN AND CONSTRUCTION.

UNLESS OTHERWISE NOTED, FIELD LOCATED UTILITIES MEET THE CI/ASCE 38-2 DEFINITION FOR QUALITY LEVEL "A" (QLA) AND QUALITY LEVEL "B" (QLB) STANDARDS.

WGI INC. DISCLAIMER: WGI RECOMMENDS SUE QUALITY LEVEL "A" AT ANY LOCATION WHERE A MORE ACCURATE DEPICTION OF THE UTILITY IS REQUIRED BY IDOT.

UTILITY LEGEND:

- A — AERIAL
- UNKNOWN UTILITY
- O — OIL (PETROLEUM)
- CTV — CABLE TV
- T — TELEPHONE
- FO — FIBER OPTIC
- G — GAS
- E — ELECTRIC
- E — TRAFFIC SIGNAL/LIGHTING
- W — WATER
- SANITARY SEWER
- STORM SEWER
- TEST HOLE
- ED — ELECTRONIC DEPTH

JOHN J. BELLIS
062-044796
REGISTERED PROFESSIONAL ENGINEER OF ILLINOIS

John J Bellis
signature

12/14/2021
date

license expires 02/28/2022

AMERICAN SURVEYING & ENGINEERING, P.C.
American Surveying & Engineering, P.C.
30 N. LaSalle St., Suite 3440
Chicago, IL 60602
Phone No. (312) 277-2000

Accurate GROUP, INC.
Accurate Group, Inc.
101 Schekter Road, Suite 200b
Lincolnshire, IL 60069
Phone No. (847) 613-1100

WGI
2001 Butterfield Road, Suite 410
Downers Grove, IL 60515
Phone No. (630) 307-3800
Fax No. (630) 307-7030
Cert No. 6091 - LB No. 7055

USER NAME = Erick.Maleza	DESIGNED -	REVISED -	
	DRAWN - EM	REVISED -	
PLOT SCALE = 100.0000 ' / in.	CHECKED - EG	REVISED -	
PLOT DATE = 12/10/2021	DATE -	REVISED -	

STATE OF ILLINOIS
DEPARTMENT OF TRANSPORTATION

I-80 FROM RIDGE RD. TO ROCK RUN CREEK
JOLIET, ILLINOIS

SCALE: | SHEET 19 OF 25 SHEETS | STA. | TO STA.

F.A. RTE.	SECTION	COUNTY	TOTAL SHEETS	SHEET NO.
		WILL	25	19
		CONTRACT NO. 62N31		
		ILLINOIS	FED. AID PROJECT	

IDOT W.O. 211 & 502

exp.

USER NAME = SALASL	DESIGNED - CMA	REVISED -	
	DRAWN - CMA	REVISED -	
PLOT SCALE = 0.16666667 ' / IN.	CHECKED - BRH	REVISED -	
PLOT DATE = 11/12/2025	DATE - 11/12/2025	REVISED -	

STATE OF ILLINOIS
DEPARTMENT OF TRANSPORTATION

I-80
SUE UTILITIES

SCALE: NTS | SHEET OF SHEETS | STA. | TO STA.

F.A.I. RTE.	SECTION	COUNTY	TOTAL SHEETS	SHEET NO.
80	FAI 80 21 VLS	VARIOUS	467	69
		CONTRACT NO. 62R19		
		ILLINOIS	FED. AID PROJECT	

MODEL: 2D SHEET H
FILE NAME: C:\TRANSYSTEMS\PW_LOCAL\TRANSYSTEMS-PW-01\DMS31451\62R19-SHT-SUE-20.DGN

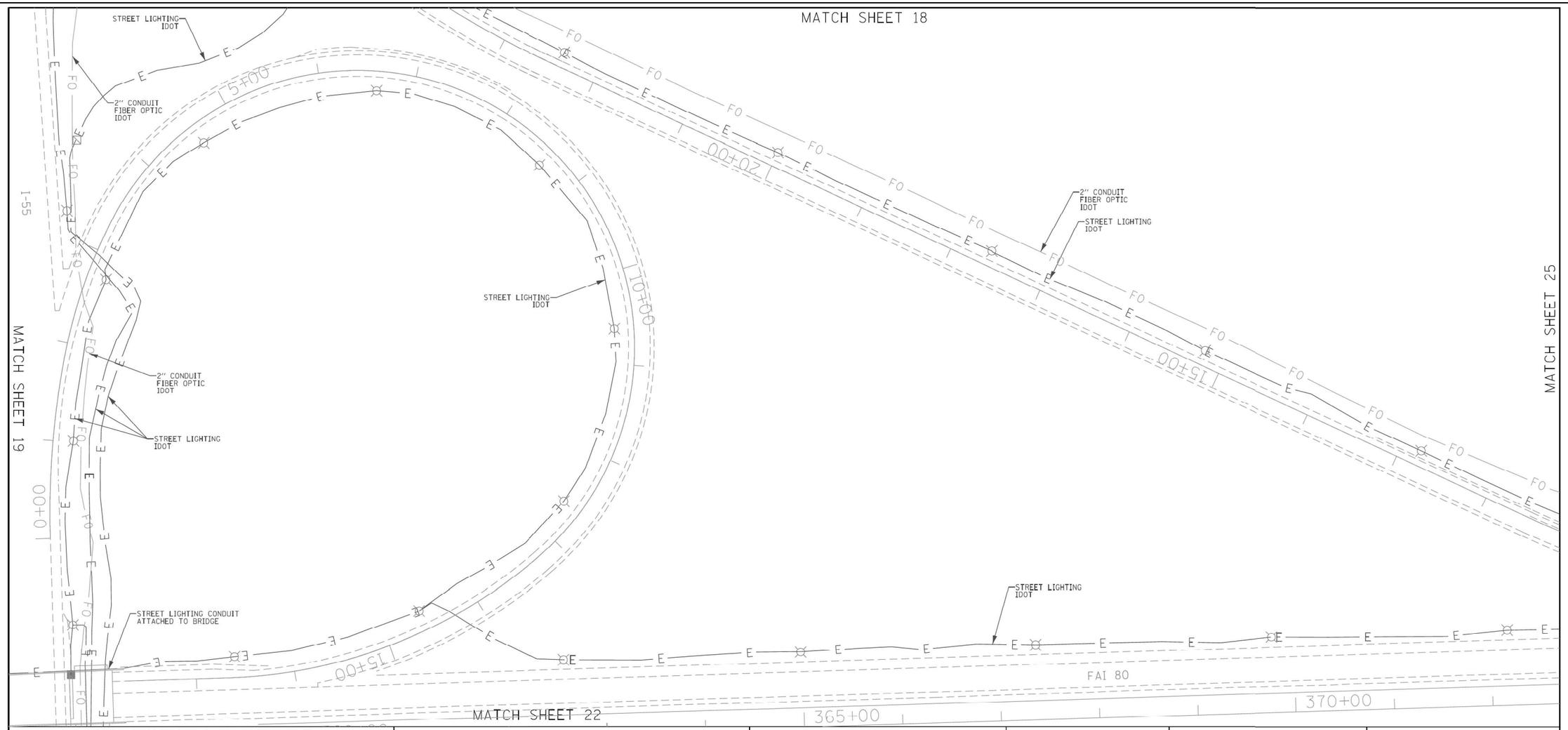

ASCE STANDARDS OF DEPICTION OF SUBSURFACE UTILITIES

QUALITY LEVEL A (QLA)
PRECISE HORIZONTAL AND VERTICAL LOCATION OF UTILITIES OBTAINED BY THE ACTUAL EXPOSURE (OR VERIFICATION OF PREVIOUSLY EXPOSED AND SURVEYED UTILITIES) USING MINIMALLY INTRUSIVE EXCAVATION EQUIPMENT TO MINIMIZE POTENTIAL FOR UTILITY DAMAGE, AND SUBSEQUENT MEASUREMENT OF THE SUBSURFACE UTILITIES WITH OTHER UTILITY ATTRIBUTES SUCH AS TYPE, SIZE & MATERIAL OF UTILITY.

QUALITY LEVEL B (QLB)
INFORMATION OBTAINED THROUGH THE APPLICATION OF APPROPRIATE SURFACE GEOPHYSICAL METHODS TO DETERMINE THE EXISTENCE AND APPROXIMATE HORIZONTAL POSITION OF SUBSURFACE UTILITIES.
QUALITY LEVEL B DATA SHOULD BE REPRODUCIBLE BY SURFACE GEOPHYSICS AT ANY POINT OF THEIR DEPICTION. THIS INFORMATION IS SURVEYED TO APPLICABLE TOLERANCES DEFINED BY THE PROJECT AND REDUCED ONTO PLAN DOCUMENTS.

QUALITY LEVEL C (QLC)
INFORMATION OBTAINED BY SURVEYING AND PLOTTING VISIBLE ABOVE-GROUND UTLITY FEATURES AND BY USING PROFESSIONAL JUDGEMENT IN CORRELATING THIS INFORMATION TO QUALITY LEVEL D INFORMATION.

QUALITY LEVEL D (QLD)
INFORMATION DERIVED FROM EXISTING RECORDS OR ORAL RECOLLECTIONS.

GENERAL NOTES:

WGI INC. HAS EXERCISED ITS BEST PROFESSIONAL EXPERTISE AND GEOPHYSICAL PROSPECTING TECHNIQUES TO DEVELOP THIS MAPPING OF SUBSURFACE UTILITIES WITHIN THE PROJECT LIMITS.

WGI INC. DOES NOT GUARANTEE THAT UTILITIES SHOWN COMPRISE ALL UTILITIES WITHIN THE PROJECT AREA.

WGI's SUE QLB INVESTIGATION WAS PERFORMED 01/06/2019 THROUGH 02/14/2020. SUE QLA INVESTIGATION WAS PERFORMED 11/02/2021 THROUGH 11/12/2021. CHANGES TO UTILITIES AFTER THESE DATES MAY HAVE BEEN MADE AND THEREFORE MAY RESULT IN VARIANCES FROM THIS PLAN IF DEEMED ADVISABLE PRIOR TO FINAL DESIGN AND CONSTRUCTION.

UNLESS OTHERWISE NOTED, FIELD LOCATED UTILITIES MEET THE CI/ASCE 38-2 DEFINITION FOR QUALITY LEVEL "A" (QLA) AND QUALITY LEVEL "B" (QLB) STANDARDS.

WGI INC. DISCLAIMER: WGI RECOMMENDS SUE QUALITY LEVEL "A" AT ANY LOCATION WHERE A MORE ACCURATE DEPICTION OF THE UTILITY IS REQUIRED BY IDOT.

UTILITY LEGEND:

- A — AERIAL
- UNKNOWN UTILITY
- O — OIL (PETROLEUM)
- CTV — CABLE TV
- T — TELEPHONE
- FO — FIBER OPTIC
- G — GAS
- E — ELECTRIC
- TS — TRAFFIC SIGNAL/LIGHTING
- W — WATER
- SS — SANITARY SEWER
- SD — STORM SEWER
- TH — TEST HOLE
- ED — ELECTRONIC DEPTH

JOHN J. BELLIS
062-044796
REGISTERED PROFESSIONAL ENGINEER OF ILLINOIS

John J Bellis
signature

12/14/2021
date

license expires 02/28/2022

AMERICAN SURVEYING & ENGINEERING, P.C.
American Surveying & Engineering, P.C.
30 N. LaSalle St., Suite 3440
Chicago, IL 60602
Phone No. (312) 277-2000

Accurate GROUP, INC.
Accurate Group, Inc.
101 Schekter Road, Suite 200b
Lincolnshire, IL 60069
Phone No. (847) 613-1100

WGI
2001 Butterfield Road, Suite 410
Downers Grove, IL 60515
Phone No. (630) 307-3800
Fax No. (630) 307-7030
Cert No. 6091 - LB No. 7055

USER NAME = Erick.Maleza	DESIGNED -	REVISED -	
	DRAWN - EM	REVISED -	
PLOT SCALE = 100.0000 ' / in.	CHECKED - EG	REVISED -	
PLOT DATE = 12/10/2021	DATE -	REVISED -	

STATE OF ILLINOIS
DEPARTMENT OF TRANSPORTATION

I-80 FROM RIDGE RD. TO ROCK RUN CREEK
JOLIET, ILLINOIS

SCALE: | SHEET 20 OF 25 SHEETS | STA. | TO STA.

F.A. RTE.	SECTION	COUNTY	TOTAL SHEETS	SHEET NO.
		WILL	25	20
		CONTRACT NO. 62N31		
		ILLINOIS	FED. AID PROJECT	

IDOT W.O. 211 & 502

exp.

USER NAME = SALASL	DESIGNED - CMA	REVISED -	
	DRAWN - CMA	REVISED -	
PLOT SCALE = 0.16666667 ' / IN.	CHECKED - BRH	REVISED -	
PLOT DATE = 11/12/2025	DATE - 11/12/2025	REVISED -	

STATE OF ILLINOIS
DEPARTMENT OF TRANSPORTATION

I-80
SUE UTILITIES

SCALE: NTS | SHEET OF SHEETS | STA. | TO STA.

F.A.I. RTE.	SECTION	COUNTY	TOTAL SHEETS	SHEET NO.
80	FAI 80 21 VLS	VARIOUS	467	70
		CONTRACT NO. 62R19		
		ILLINOIS	FED. AID PROJECT	

MODEL: 2D SHEET H
FILE NAME: C:\TRANSYSTEMS\IPW_LOCAL\TRANSYSTEMS-PW\-0110MS31451\62R19-SHT-SUE-21.DGN

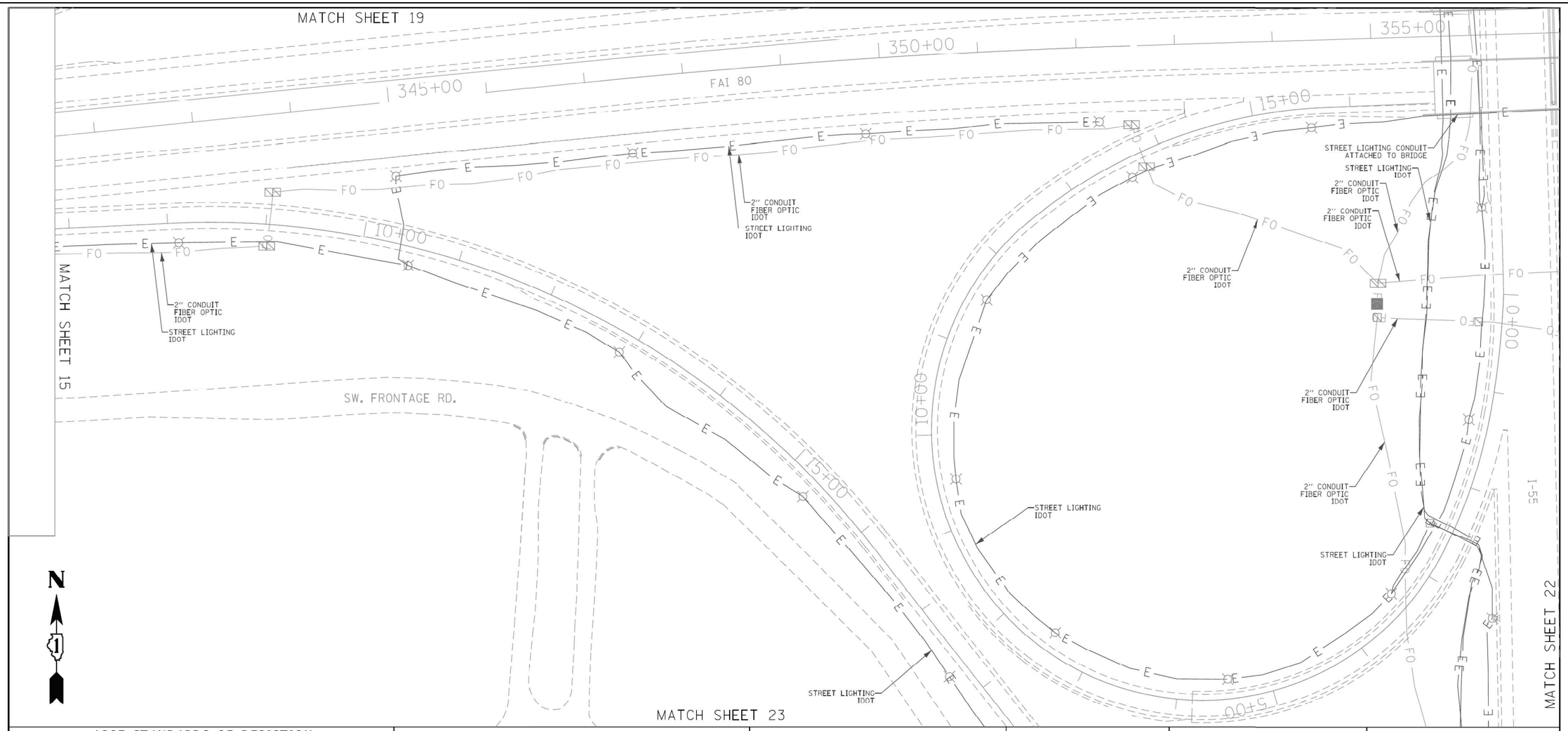

ASCE STANDARDS OF DEPICTION OF SUBSURFACE UTILITIES

QUALITY LEVEL A (QLA)
PRECISE HORIZONTAL AND VERTICAL LOCATION OF UTILITIES OBTAINED BY THE ACTUAL EXPOSURE (OR VERIFICATION OF PREVIOUSLY EXPOSED AND SURVEYED UTILITIES) USING MINIMALLY INTRUSIVE EXCAVATION EQUIPMENT TO MINIMIZE POTENTIAL FOR UTILITY DAMAGE, AND SUBSEQUENT MEASUREMENT OF THE SUBSURFACE UTILITIES WITH OTHER UTILITY ATTRIBUTES SUCH AS TYPE, SIZE & MATERIAL OF UTILITY.

QUALITY LEVEL B (QLB)
INFORMATION OBTAINED THROUGH THE APPLICATION OF APPROPRIATE SURFACE GEOPHYSICAL METHODS TO DETERMINE THE EXISTENCE AND APPROXIMATE HORIZONTAL POSITION OF SUBSURFACE UTILITIES. QUALITY LEVEL B DATA SHOULD BE REPRODUCIBLE BY SURFACE GEOPHYSICS AT ANY POINT OF THEIR DEPICTION. THIS INFORMATION IS SURVEYED TO APPLICABLE TOLERANCES DEFINED BY THE PROJECT AND REDUCED ONTO PLAN DOCUMENTS.

QUALITY LEVEL C (QLC)
INFORMATION OBTAINED BY SURVEYING AND PLOTTING VISIBLE ABOVE-GROUND UTLITY FEATURES AND BY USING PROFESSIONAL JUDGEMENT IN CORRELATING THIS INFORMATION TO QUALITY LEVEL D INFORMATION.

QUALITY LEVEL D (QLD)
INFORMATION DERIVED FROM EXISTING RECORDS OR ORAL RECOLLECTIONS.

GENERAL NOTES:

WGI INC. HAS EXERCISED ITS BEST PROFESSIONAL EXPERTISE AND GEOPHYSICAL PROSPECTING TECHNIQUES TO DEVELOP THIS MAPPING OF SUBSURFACE UTILITIES WITHIN THE PROJECT LIMITS.

WGI INC. DOES NOT GUARANTEE THAT UTILITIES SHOWN COMPRISE ALL UTILITIES WITHIN THE PROJECT AREA.

WGI's SUE QLB INVESTIGATION WAS PERFORMED 01/06/2019 THROUGH 02/14/2020. SUE QLA INVESTIGATION WAS PERFORMED 11/02/2021 THROUGH 11/12/2021. CHANGES TO UTILITIES AFTER THESE DATES MAY HAVE BEEN MADE AND THEREFORE MAY RESULT IN VARIANCES FROM THIS PLAN IF DEEMED ADVISABLE PRIOR TO FINAL DESIGN AND CONSTRUCTION.

UNLESS OTHERWISE NOTED, FIELD LOCATED UTILITIES MEET THE CI/ASCE 38-2 DEFINITION FOR QUALITY LEVEL "A" (QLA) AND QUALITY LEVEL "B" (QLB) STANDARDS.

WGI INC. DISCLAIMER: WGI RECOMMENDS SUE QUALITY LEVEL "A" AT ANY LOCATION WHERE A MORE ACCURATE DEPICTION OF THE UTILITY IS REQUIRED BY IDOT.

UTILITY LEGEND:

- AERIAL
- UNKNOWN UTILITY
- OIL (PETROLEUM)
- CABLE TV
- TELEPHONE
- FIBER OPTIC
- GAS
- ELECTRIC
- TRAFFIC SIGNAL/LIGHTING
- WATER
- SANITARY SEWER
- STORM SEWER
- TEST HOLE
- ELECTRONIC DEPTH

JOHN J. BELLIS
062-044796
REGISTERED PROFESSIONAL ENGINEER OF ILLINOIS

signature
12/14/2021
date
license expires 02/28/2022

AMERICAN SURVEYING & ENGINEERING, P.C.
American Surveying & Engineering, P.C.
30 N. LaSalle St., Suite 3440
Chicago, IL 60602
Phone No. (312) 277-2000

Accurate GROUP, INC.
Accurate Group, Inc.
101 Schekter Road, Suite 200b
Lincolnshire, IL 60069
Phone No. (847) 613-1100

WGI
2001 Butterfield Road, Suite 410
Downers Grove, IL 60515
Phone No. (630) 307-3800
Fax No. (630) 307-7030
Cert No. 6091 - LB No. 7055

USER NAME = Erick.Maleza	DESIGNED -	REVISED -	
	DRAWN - EM	REVISED -	
PLOT SCALE = 100.0000 ' / in.	CHECKED - EG	REVISED -	
PLOT DATE = 12/10/2021	DATE -	REVISED -	

STATE OF ILLINOIS
DEPARTMENT OF TRANSPORTATION

I-80 FROM RIDGE RD. TO ROCK RUN CREEK
JOLIET, ILLINOIS

SCALE: | SHEET 21 OF 25 SHEETS | STA. | TO STA.

F.A. RTE.	SECTION	COUNTY	TOTAL SHEETS	SHEET NO.
		WILL	25	21
		CONTRACT NO. 62N31		
		ILLINOIS FED. AID PROJECT		

IDOT W.O. 211 & 502

exp.

USER NAME = SALASL	DESIGNED - CMA	REVISED -	
	DRAWN - CMA	REVISED -	
PLOT SCALE = 0.16666667 ' / IN.	CHECKED - BRH	REVISED -	
PLOT DATE = 11/12/2025	DATE - 11/12/2025	REVISED -	

STATE OF ILLINOIS
DEPARTMENT OF TRANSPORTATION

I-80
SUE UTILITIES

SCALE: NTS | SHEET OF SHEETS | STA. | TO STA.

F.A.I. RTE.	SECTION	COUNTY	TOTAL SHEETS	SHEET NO.
80	FAI 80 21 VLS	VARIOUS	467	71
		CONTRACT NO. 62R19		
		ILLINOIS FED. AID PROJECT		

MODEL: 2D SHEET H
FILE NAME: C:\TRANSYSTEMS\PW LOCAL\TRANSYSTEMS-PW-01\DMS31451\62R19-SHT-SUE-22.DGN

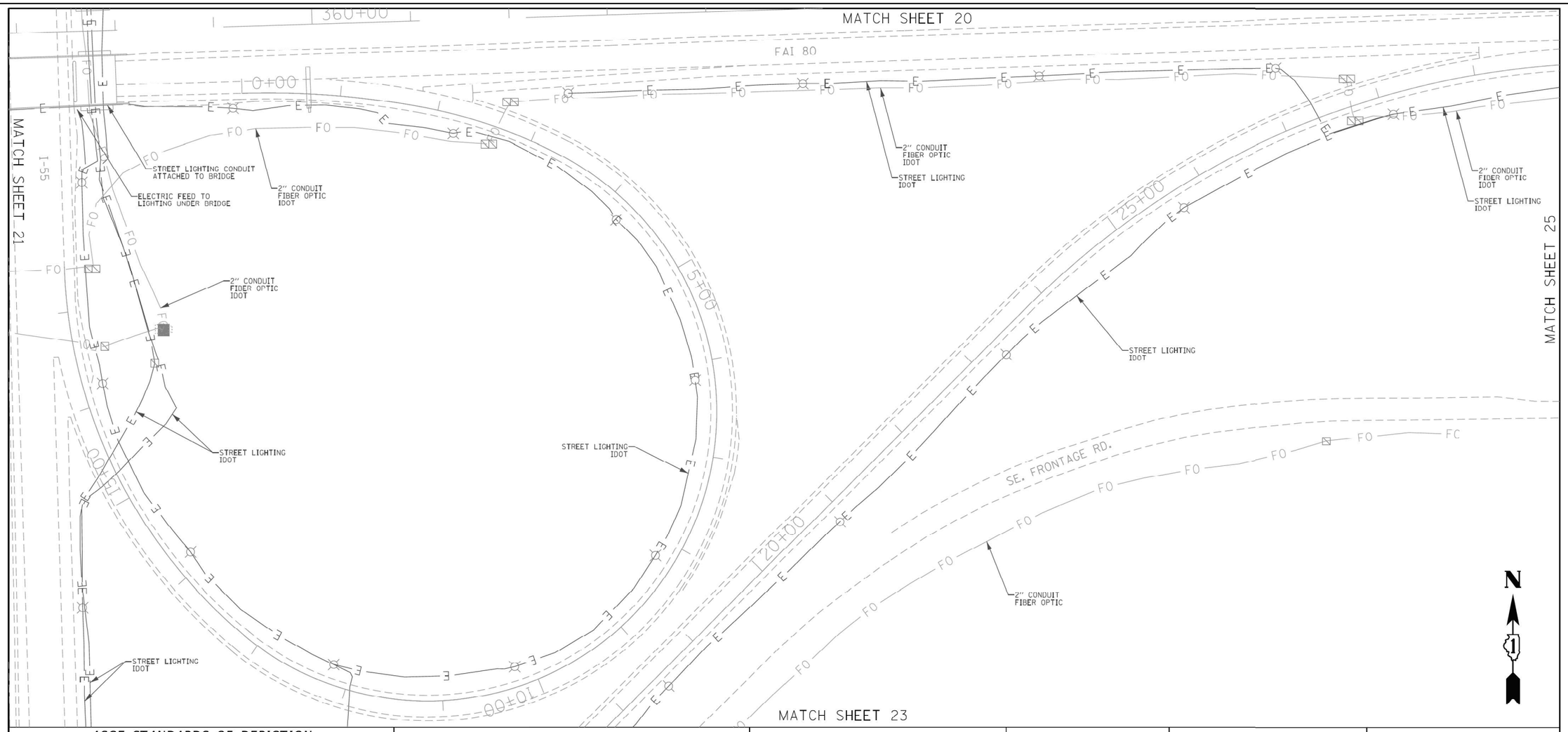

ASCE STANDARDS OF DEPICTION OF SUBSURFACE UTILITIES

QUALITY LEVEL A (QLA)
PRECISE HORIZONTAL AND VERTICAL LOCATION OF UTILITIES OBTAINED BY THE ACTUAL EXPOSURE (OR VERIFICATION OF PREVIOUSLY EXPOSED AND SURVEYED UTILITIES) USING MINIMALLY INTRUSIVE EXCAVATION EQUIPMENT TO MINIMIZE POTENTIAL FOR UTILITY DAMAGE, AND SUBSEQUENT MEASUREMENT OF THE SUBSURFACE UTILITIES WITH OTHER UTILITY ATTRIBUTES SUCH AS TYPE, SIZE & MATERIAL OF UTILITY.

QUALITY LEVEL B (QLB)
INFORMATION OBTAINED THROUGH THE APPLICATION OF APPROPRIATE SURFACE GEOPHYSICAL METHODS TO DETERMINE THE EXISTENCE AND APPROXIMATE HORIZONTAL POSITION OF SUBSURFACE UTILITIES. QUALITY LEVEL B DATA SHOULD BE REPRODUCIBLE BY SURFACE GEOPHYSICS AT ANY POINT OF THEIR DEPICTION. THIS INFORMATION IS SURVEYED TO APPLICABLE TOLERANCES DEFINED BY THE PROJECT AND REDUCED ONTO PLAN DOCUMENTS.

QUALITY LEVEL C (QLC)
INFORMATION OBTAINED BY SURVEYING AND PLOTTING VISIBLE ABOVE-GROUND UTILITY FEATURES AND BY USING PROFESSIONAL JUDGEMENT IN CORRELATING THIS INFORMATION TO QUALITY LEVEL D INFORMATION.

QUALITY LEVEL D (QLD)
INFORMATION DERIVED FROM EXISTING RECORDS OR ORAL RECOLLECTIONS.

GENERAL NOTES:

WGI INC. HAS EXERCISED ITS BEST PROFESSIONAL EXPERTISE AND GEOPHYSICAL PROSPECTING TECHNIQUES TO DEVELOP THIS MAPPING OF SUBSURFACE UTILITIES WITHIN THE PROJECT LIMITS.

WGI INC. DOES NOT GUARANTEE THAT UTILITIES SHOWN COMPRISE ALL UTILITIES WITHIN THE PROJECT AREA.

WGI's SUE QLB INVESTIGATION WAS PERFORMED 01/06/2019 THROUGH 02/14/2020. SUE QLA INVESTIGATION WAS PERFORMED 11/02/2021 THROUGH 11/12/2021. CHANGES TO UTILITIES AFTER THESE DATES MAY HAVE BEEN MADE AND THEREFORE MAY RESULT IN VARIANCES FROM THIS PLAN IF DEEMED ADVISABLE PRIOR TO FINAL DESIGN AND CONSTRUCTION.

UNLESS OTHERWISE NOTED, FIELD LOCATED UTILITIES MEET THE CI/ASCE 38-2 DEFINITION FOR QUALITY LEVEL "A" (QLA) AND QUALITY LEVEL "B" (QLB) STANDARDS.

WGI INC. DISCLAIMER: WGI RECOMMENDS SUE QUALITY LEVEL "A" AT ANY LOCATION WHERE A MORE ACCURATE DEPICTION OF THE UTILITY IS REQUIRED BY IDOT.

UTILITY LEGEND:

- A — AERIAL
- UNKNOWN UTILITY
- O — OIL (PETROLEUM)
- CTV — CABLE TV
- T — TELEPHONE
- FO — FIBER OPTIC
- G — GAS
- E — ELECTRIC
- TS — TRAFFIC SIGNAL/LIGHTING
- W — WATER
- SANITARY SEWER
- STORM SEWER
- TEST HOLE
- ED — ELECTRONIC DEPTH

JOHN J. BELLIS
062-044796
REGISTERED PROFESSIONAL ENGINEER OF ILLINOIS

signature

12/14/2021
date

license expires 02/28/2022

AMERICAN SURVEYING & ENGINEERING, P.C.
American Surveying & Engineering, P.C.
30 N. LaSalle St., Suite 3440
Chicago, IL 60602
Phone No. (312) 277-2000

Accurate GROUP, INC.
Accurate Group, Inc.
101 Schekter Road, Suite 200b
Lincolnshire, IL 60069
Phone No. (847) 613-1100

WGI
2001 Butterfield Road, Suite 410
Downers Grove, IL 60515
Phone No. (630) 307-3800
Fax No. (630) 307-7030
Cert No. 6091 - LB No. 7055

USER NAME = Erick.Maleza	DESIGNED -	REVISED -	
	DRAWN - EM	REVISED -	
PLOT SCALE = 100.0000 ' / in.	CHECKED - EG	REVISED -	
PLOT DATE = 12/10/2021	DATE -	REVISED -	

STATE OF ILLINOIS
DEPARTMENT OF TRANSPORTATION

I-80 FROM RIDGE RD. TO ROCK RUN CREEK
JOLIET, ILLINOIS

SCALE: | SHEET 22 OF 25 SHEETS | STA. | TO STA.

F.A. RTE.	SECTION	COUNTY	TOTAL SHEETS	SHEET NO.
		WILL	25	22
		CONTRACT NO. 62N31		
	ILLINOIS	FED. AID PROJECT		

IDOT W.O. 211 & 502

exp.

USER NAME = SALASL	DESIGNED - CMA	REVISED -	
	DRAWN - CMA	REVISED -	
PLOT SCALE = 0.16666667 ' / IN.	CHECKED - BRH	REVISED -	
PLOT DATE = 11/12/2025	DATE - 11/12/2025	REVISED -	

STATE OF ILLINOIS
DEPARTMENT OF TRANSPORTATION

I-80
SUE UTILITIES

SCALE: NTS | SHEET OF SHEETS | STA. | TO STA.

F.A.I. RTE.	SECTION	COUNTY	TOTAL SHEETS	SHEET NO.
80	FAI 80 21 VLS	VARIOUS	467	72
		CONTRACT NO. 62R19		
	ILLINOIS	FED. AID PROJECT		

MODEL: 2D SHEET H
FILE NAME: C:\TRANSYSTEMS\PW_LOCAL\TRANSYSTEMS-PW-01\DMS31451\62R19-SHT-SUE-23.DGN

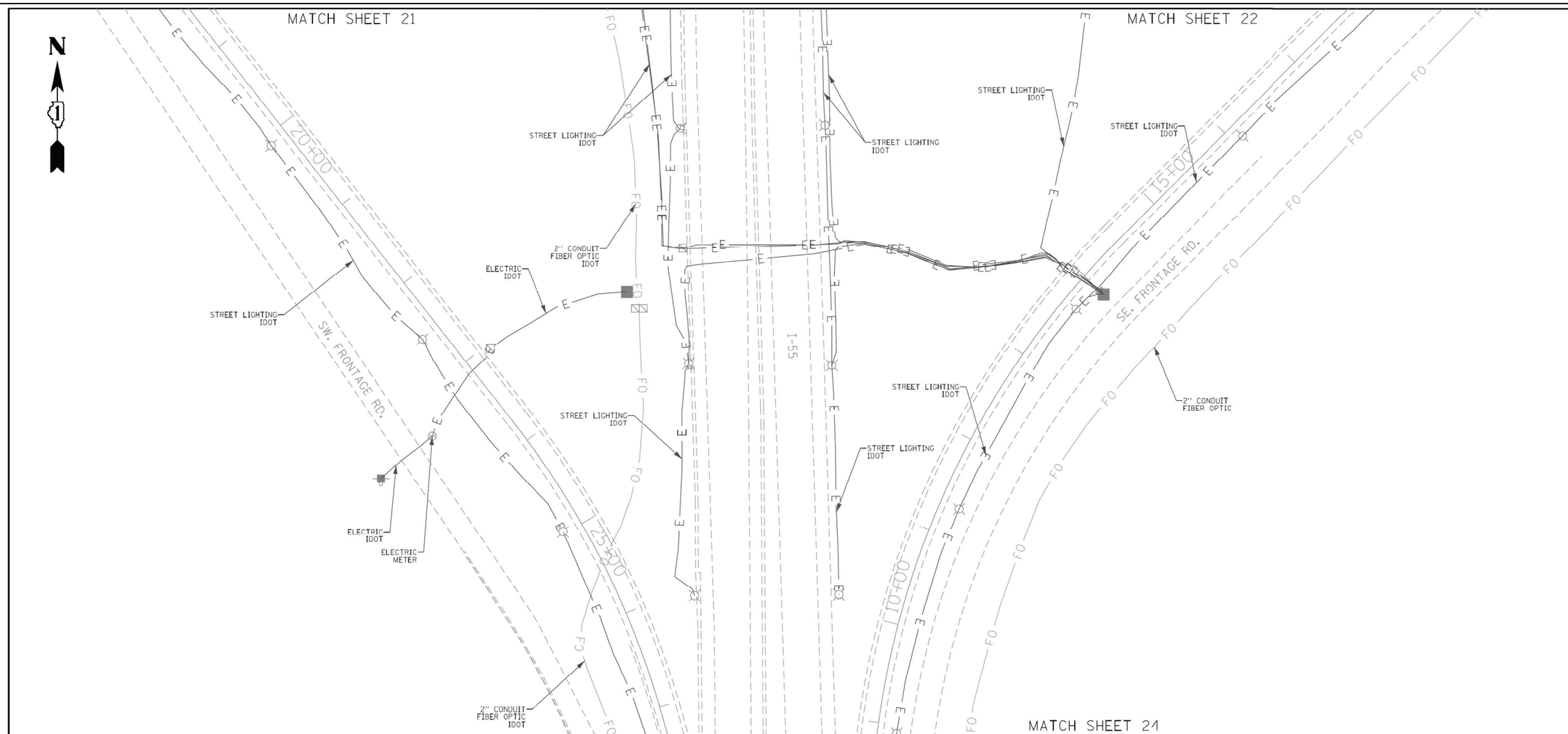

ASCE STANDARDS OF DEPICTION OF SUBSURFACE UTILITIES

QUALITY LEVEL A (QLA)
PRECISE HORIZONTAL AND VERTICAL LOCATION OF UTILITIES OBTAINED BY THE ACTUAL EXPOSURE (OR VERIFICATION OF PREVIOUSLY EXPOSED AND SURVEYED UTILITIES) USING MINIMALLY INTRUSIVE EXCAVATION EQUIPMENT TO MINIMIZE POTENTIAL FOR UTILITY DAMAGE, AND SUBSEQUENT MEASUREMENT OF THE SUBSURFACE UTILITIES WITH OTHER UTILITY ATTRIBUTES SUCH AS TYPE, SIZE & MATERIAL OF UTILITY.

QUALITY LEVEL B (QLB)
INFORMATION OBTAINED THROUGH THE APPLICATION OF APPROPRIATE SURFACE GEOPHYSICAL METHODS TO DETERMINE THE EXISTENCE AND APPROXIMATE HORIZONTAL POSITION OF SUBSURFACE UTILITIES. QUALITY LEVEL B DATA SHOULD BE REPRODUCIBLE BY SURFACE GEOPHYSICS AT ANY POINT OF THEIR DEPICTION. THIS INFORMATION IS SURVEYED TO APPLICABLE TOLERANCES DEFINED BY THE PROJECT AND REDUCED ONTO PLAN DOCUMENTS.

QUALITY LEVEL C (QLC)
INFORMATION OBTAINED BY SURVEYING AND PLOTTING VISIBLE ABOVE-GROUND UTLITY FEATURES AND BY USING PROFESSIONAL JUDGEMENT IN CORRELATING THIS INFORMATION TO QUALITY LEVEL D INFORMATION.

QUALITY LEVEL D (QLD)
INFORMATION DERIVED FROM EXISTING RECORDS OR ORAL RECOLLECTIONS.

GENERAL NOTES:

WGI INC. HAS EXERCISED ITS BEST PROFESSIONAL EXPERTISE AND GEOPHYSICAL PROSPECTING TECHNIQUES TO DEVELOP THIS MAPPING OF SUBSURFACE UTILITIES WITHIN THE PROJECT LIMITS.

WGI INC. DOES NOT GUARANTEE THAT UTILITIES SHOWN COMPRISE ALL UTILITIES WITHIN THE PROJECT AREA.

WGI's SUE QLB INVESTIGATION WAS PERFORMED 01/06/2019 THROUGH 02/14/2020. SUE QLA INVESTIGATION WAS PERFORMED 11/02/2021 THROUGH 11/12/2021. CHANGES TO UTILITIES AFTER THESE DATES MAY HAVE BEEN MADE AND THEREFORE MAY RESULT IN VARIANCES FROM THIS PLAN IF DEEMED ADVISABLE PRIOR TO FINAL DESIGN AND CONSTRUCTION.

UNLESS OTHERWISE NOTED, FIELD LOCATED UTILITIES MEET THE CI/ASCE 38-2 DEFINITION FOR QUALITY LEVEL "A" (QLA) AND QUALITY LEVEL "B" (QLB) STANDARDS.

WGI INC. DISCLAIMER: WGI RECOMMENDS SUE QUALITY LEVEL "A" AT ANY LOCATION WHERE A MORE ACCURATE DEPICTION OF THE UTILITY IS REQUIRED BY IDOT.

UTILITY LEGEND:

- A — AERIAL
- UNKNOWN UTILITY
- O — OIL (PETROLEUM)
- CTV — CABLE TV
- T — TELEPHONE
- FO — FIBER OPTIC
- G — GAS
- E — ELECTRIC
- E — TRAFFIC SIGNAL/LIGHTING
- W — WATER
- SANITARY SEWER
- S — STORM SEWER
- TEST HOLE
- ED — ELECTRONIC DEPTH

JOHN J. BELLIS
062-044796
REGISTERED PROFESSIONAL ENGINEER OF ILLINOIS

John J Bellis
signature

12/14/2021
date

license expires 02/28/2022

AMERICAN SURVEYING & ENGINEERING, P.C.
American Surveying & Engineering, P.C.
30 N. LaSalle St., Suite 3440
Chicago, IL 60602
Phone No. (312) 277-2000

Accurate GROUP, INC.
Accurate Group, Inc.
101 Schekter Road, Suite 200b
Lincolnshire, IL 60069
Phone No. (847) 613-1100

WGI
2001 Butterfield Road, Suite 410
Downers Grove, IL 60515
Phone No. (630) 307-3800
Fax No. (630) 307-7030
Cert No. 6091 - LB No. 7055

USER NAME = Erick.Maleza	DESIGNED -	REVISED -	
	DRAWN - EM	REVISED -	
PLOT SCALE = 100.0000 ' / in.	CHECKED - EG	REVISED -	
PLOT DATE = 12/10/2021	DATE -	REVISED -	

STATE OF ILLINOIS
DEPARTMENT OF TRANSPORTATION

I-80 FROM RIDGE RD. TO ROCK RUN CREEK
JOLIET, ILLINOIS

SCALE: | SHEET 23 OF 25 SHEETS | STA. | TO STA.

F.A. RTE.	SECTION	COUNTY	TOTAL SHEETS	SHEET NO.
		WILL	25	23
		CONTRACT NO. 62N31		
	ILLINOIS	FED. AID PROJECT		

IDOT W.O. 211 & 502

exp.

USER NAME = SALASL	DESIGNED - CMA	REVISED -	
	DRAWN - CMA	REVISED -	
PLOT SCALE = 0.16666667 ' / IN.	CHECKED - BRH	REVISED -	
PLOT DATE = 11/12/2025	DATE - 11/12/2025	REVISED -	

STATE OF ILLINOIS
DEPARTMENT OF TRANSPORTATION

I-80
SUE UTILITIES

SCALE: NTS | SHEET OF SHEETS | STA. | TO STA.

F.A.I. RTE.	SECTION	COUNTY	TOTAL SHEETS	SHEET NO.
80	FAI 80 21 VLS	VARIOUS	467	73
		CONTRACT NO. 62R19		
	ILLINOIS	FED. AID PROJECT		

MODEL: 2D SHEET H
FILE NAME: C:\TRANSYSTEMS\PW_LOCAL\TRANSYSTEMS-PW-01\DMS31451\62R19-SHT-SUE-24.DGN

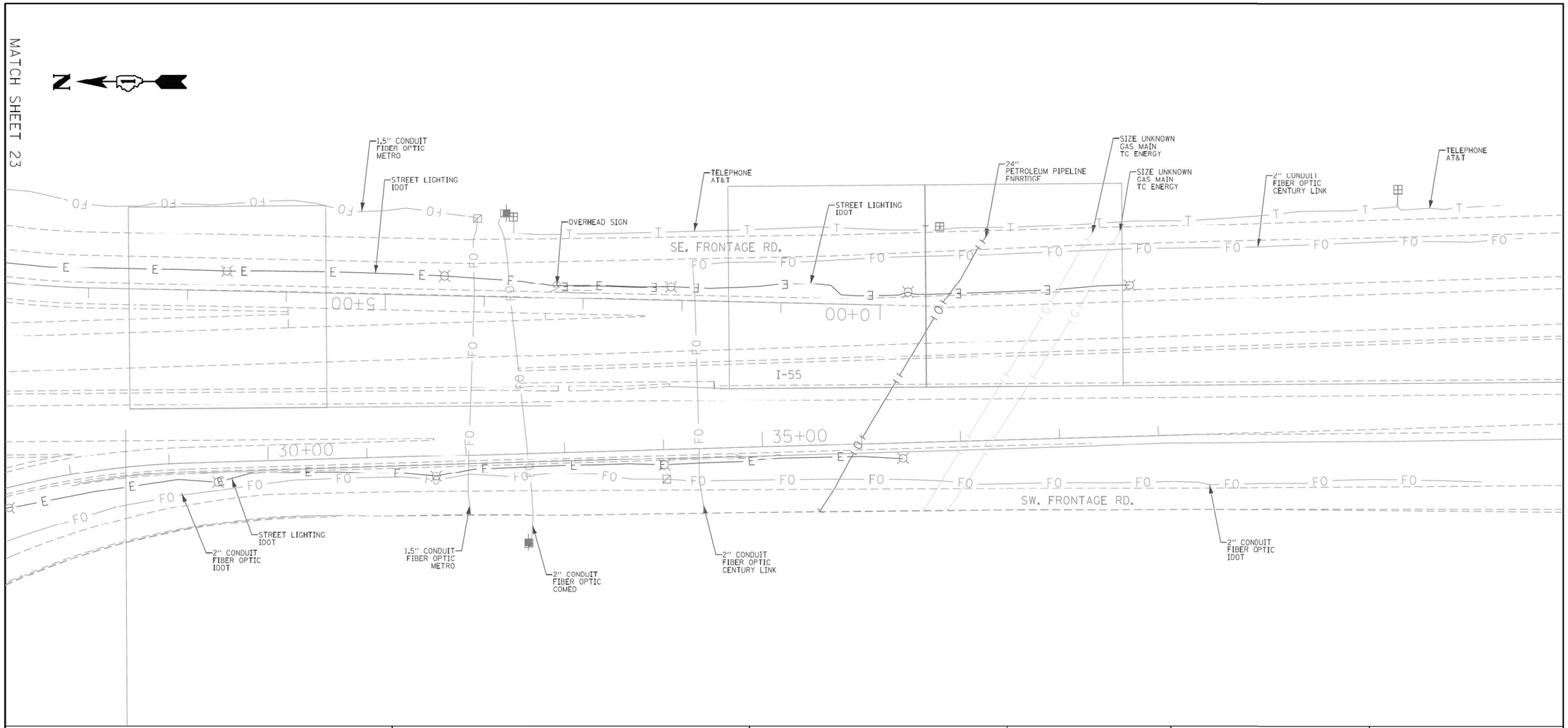

ASCE STANDARDS OF DEPICTION OF SUBSURFACE UTILITIES

QUALITY LEVEL A (QLA)
PRECISE HORIZONTAL AND VERTICAL LOCATION OF UTILITIES OBTAINED BY THE ACTUAL EXPOSURE (OR VERIFICATION OF PREVIOUSLY EXPOSED AND SURVEYED UTILITIES) USING MINIMALLY INTRUSIVE EXCAVATION EQUIPMENT TO MINIMIZE POTENTIAL FOR UTILITY DAMAGE, AND SUBSEQUENT MEASUREMENT OF THE SUBSURFACE UTILITIES WITH OTHER UTILITY ATTRIBUTES SUCH AS TYPE, SIZE & MATERIAL OF UTILITY.

QUALITY LEVEL B (QLB)
INFORMATION OBTAINED THROUGH THE APPLICATION OF APPROPRIATE SURFACE GEOPHYSICAL METHODS TO DETERMINE THE EXISTENCE AND APPROXIMATE HORIZONTAL POSITION OF SUBSURFACE UTILITIES. QUALITY LEVEL B DATA SHOULD BE REPRODUCIBLE BY SURFACE GEOPHYSICS AT ANY POINT OF THEIR DEPICTION. THIS INFORMATION IS SURVEYED TO APPLICABLE TOLERANCES DEFINED BY THE PROJECT AND REDUCED ONTO PLAN DOCUMENTS.

QUALITY LEVEL C (QLC)
INFORMATION OBTAINED BY SURVEYING AND PLOTTING VISIBLE ABOVE-GROUND UTLITY FEATURES AND BY USING PROFESSIONAL JUDGEMENT IN CORRELATING THIS INFORMATION TO QUALITY LEVEL D INFORMATION.

QUALITY LEVEL D (QLD)
INFORMATION DERIVED FROM EXISTING RECORDS OR ORAL RECOLLECTIONS.

GENERAL NOTES:

WGI INC. HAS EXERCISED ITS BEST PROFESSIONAL EXPERTISE AND GEOPHYSICAL PROSPECTING TECHNIQUES TO DEVELOP THIS MAPPING OF SUBSURFACE UTILITIES WITHIN THE PROJECT LIMITS.

WGI INC. DOES NOT GUARANTEE THAT UTILITIES SHOWN COMPRISE ALL UTILITIES WITHIN THE PROJECT AREA.

WGI's SUE QLB INVESTIGATION WAS PERFORMED 01/06/2019 THROUGH 02/14/2020. SUE QLA INVESTIGATION WAS PERFORMED 11/02/2021 THROUGH 11/12/2021. CHANGES TO UTILITIES AFTER THESE DATES MAY HAVE BEEN MADE AND THEREFORE MAY RESULT IN VARIANCES FROM THIS PLAN IF DEEMED ADVISABLE PRIOR TO FINAL DESIGN AND CONSTRUCTION.

UNLESS OTHERWISE NOTED, FIELD LOCATED UTILITIES MEET THE CI/ASCE 38-2 DEFINITION FOR QUALITY LEVEL "A" (QLA) AND QUALITY LEVEL "B" (QLB) STANDARDS.

WGI INC. DISCLAIMER: WGI RECOMMENDS SUE QUALITY LEVEL "A" AT ANY LOCATION WHERE A MORE ACCURATE DEPICTION OF THE UTILITY IS REQUIRED BY IDOT.

UTILITY LEGEND:

- A — AERIAL
- UNKNOWN UTILITY
- O — OIL (PETROLEUM)
- CTV — CABLE TV
- T — TELEPHONE
- FO — FIBER OPTIC
- G — GAS
- E — ELECTRIC
- E — TRAFFIC SIGNAL/LIGHTING
- W — WATER
- SANITARY SEWER
- S — STORM SEWER
- TEST HOLE
- ED — ELECTRONIC DEPTH

JOHN J. BELLIS
062-044796
REGISTERED PROFESSIONAL ENGINEER OF ILLINOIS

John J Bellis
signature

12/14/2021
date

license expires 02/28/2022

AMERICAN SURVEYING & ENGINEERING, P.C.
American Surveying & Engineering, P.C.
30 N. LaSalle St., Suite 3440
Chicago, IL 60602
Phone No. (312) 277-2000

Accurate GROUP, INC.
Accurate Group, Inc.
101 Schekter Road, Suite 200b
Lincolnshire, IL 60069
Phone No. (847) 613-1100

WGI
2001 Butterfield Road, Suite 410
Downers Grove, IL 60515
Phone No. (630) 307-3800
Fax No. (630) 307-7030
Cert No. 6091 - LB No. 7055

USER NAME = Erick.Maleza	DESIGNED -	REVISED -	
	DRAWN - EM	REVISED -	
PLOT SCALE = 100.0000 ' / in.	CHECKED - EG	REVISED -	
PLOT DATE = 12/10/2021	DATE -	REVISED -	

STATE OF ILLINOIS
DEPARTMENT OF TRANSPORTATION

I-80 FROM RIDGE RD. TO ROCK RUN CREEK
JOLIET, ILLINOIS

SCALE: | SHEET 24 OF 25 SHEETS | STA. | TO STA.

F.A. RTE.	SECTION	COUNTY	TOTAL SHEETS	SHEET NO.
		WILL	25	24
		CONTRACT NO. 62N31		
		ILLINOIS	FED. AID PROJECT	

IDOT W.O. 211 & 502

exp.

USER NAME = SALASL	DESIGNED - CMA	REVISED -	
	DRAWN - CMA	REVISED -	
PLOT SCALE = 0.16666667 ' / IN.	CHECKED - BRH	REVISED -	
PLOT DATE = 11/12/2025	DATE - 11/12/2025	REVISED -	

STATE OF ILLINOIS
DEPARTMENT OF TRANSPORTATION

I-80
SUE UTILITIES

SCALE: NTS | SHEET OF SHEETS | STA. | TO STA.

F.A.I. RTE.	SECTION	COUNTY	TOTAL SHEETS	SHEET NO.
80	FAI 80 21 VLS	VARIOUS	467	74
		CONTRACT NO. 62R19		
		ILLINOIS	FED. AID PROJECT	

MODEL: 2D SHEET H
FILE NAME: C:\TRANSYSTEMS\PW LOCAL\TRANSYSTEMS-PW-01\DMS31451\62R19-SHT-SUE-25.DGN

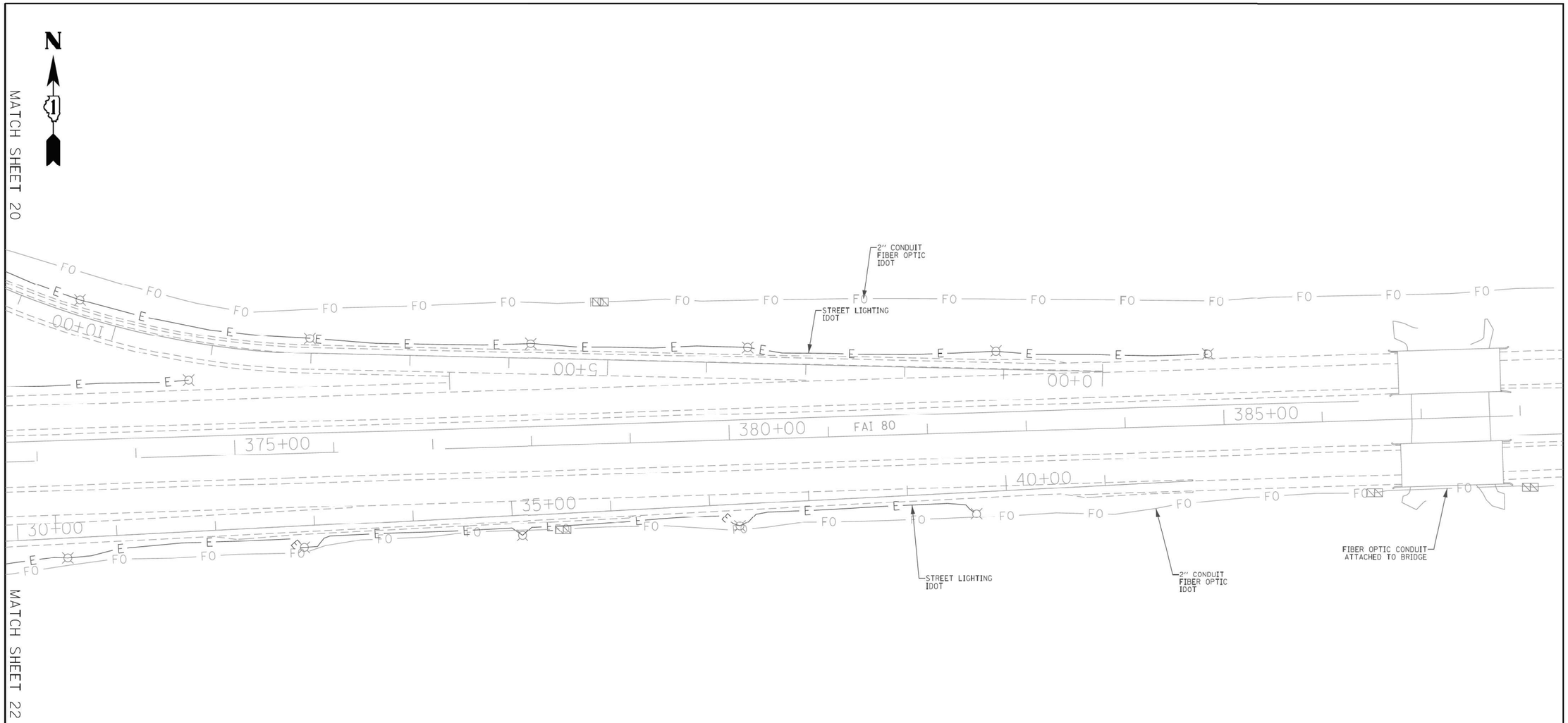

ASCE STANDARDS OF DEPICTION OF SUBSURFACE UTILITIES

QUALITY LEVEL A (QLA)
PRECISE HORIZONTAL AND VERTICAL LOCATION OF UTILITIES OBTAINED BY THE ACTUAL EXPOSURE (OR VERIFICATION OF PREVIOUSLY EXPOSED AND SURVEYED UTILITIES) USING MINIMALLY INTRUSIVE EXCAVATION EQUIPMENT TO MINIMIZE POTENTIAL FOR UTILITY DAMAGE, AND SUBSEQUENT MEASUREMENT OF THE SUBSURFACE UTILITIES WITH OTHER UTILITY ATTRIBUTES SUCH AS TYPE, SIZE & MATERIAL OF UTILITY.

QUALITY LEVEL B (QLB)
INFORMATION OBTAINED THROUGH THE APPLICATION OF APPROPRIATE SURFACE GEOPHYSICAL METHODS TO DETERMINE THE EXISTENCE AND APPROXIMATE HORIZONTAL POSITION OF SUBSURFACE UTILITIES. QUALITY LEVEL B DATA SHOULD BE REPRODUCIBLE BY SURFACE GEOPHYSICS AT ANY POINT OF THEIR DEPICTION. THIS INFORMATION IS SURVEYED TO APPLICABLE TOLERANCES DEFINED BY THE PROJECT AND REDUCED ONTO PLAN DOCUMENTS.

QUALITY LEVEL C (QLC)
INFORMATION OBTAINED BY SURVEYING AND PLOTTING VISIBLE ABOVE-GROUND UTLITY FEATURES AND BY USING PROFESSIONAL JUDGEMENT IN CORRELATING THIS INFORMATION TO QUALITY LEVEL D INFORMATION.

QUALITY LEVEL D (QLD)
INFORMATION DERIVED FROM EXISTING RECORDS OR ORAL RECOLLECTIONS.

GENERAL NOTES:

WGI INC. HAS EXERCISED ITS BEST PROFESSIONAL EXPERTISE AND GEOPHYSICAL PROSPECTING TECHNIQUES TO DEVELOP THIS MAPPING OF SUBSURFACE UTILITIES WITHIN THE PROJECT LIMITS.

WGI INC. DOES NOT GUARANTEE THAT UTILITIES SHOWN COMPRISE ALL UTILITIES WITHIN THE PROJECT AREA.

WGI's SUE QLB INVESTIGATION WAS PERFORMED 01/06/2019 THROUGH 02/14/2020. SUE QLA INVESTIGATION WAS PERFORMED 11/02/2021 THROUGH 11/12/2021. CHANGES TO UTILITIES AFTER THESE DATES MAY HAVE BEEN MADE AND THEREFORE MAY RESULT IN VARIANCES FROM THIS PLAN IF DEEMED ADVISABLE PRIOR TO FINAL DESIGN AND CONSTRUCTION.

UNLESS OTHERWISE NOTED, FIELD LOCATED UTILITIES MEET THE CI/ASCE 38-2 DEFINITION FOR QUALITY LEVEL "A" (QLA) AND QUALITY LEVEL "B" (QLB) STANDARDS.

WGI INC. DISCLAIMER: WGI RECOMMENDS SUE QUALITY LEVEL "A" AT ANY LOCATION WHERE A MORE ACCURATE DEPICTION OF THE UTILITY IS REQUIRED BY IDOT.

UTILITY LEGEND:

- A — AERIAL
- UNKNOWN UTILITY
- O — OIL (PETROLEUM)
- CTV — CABLE TV
- T — TELEPHONE
- FO — FIBER OPTIC
- G — GAS
- E — ELECTRIC
- E — TRAFFIC SIGNAL/LIGHTING
- W — WATER
- SANITARY SEWER
- STORM SEWER
- TEST HOLE
- ED — ELECTRONIC DEPTH

JOHN J. BELLIS
062-044796
REGISTERED PROFESSIONAL ENGINEER OF ILLINOIS

John J Bellis
signature

12/14/2021
date

license expires 02/28/2022

AMERICAN SURVEYING & ENGINEERING, P.C.
American Surveying & Engineering, P.C.
30 N. LaSalle St., Suite 3440
Chicago, IL 60602
Phone No. (312) 277-2000

Accurate GROUP, INC.
Accurate Group, Inc.
101 Schekter Road, Suite 200b
Lincolnshire, IL 60069
Phone No. (847) 613-1100

WGI
2001 Butterfield Road, Suite 410
Downers Grove, IL 60515
Phone No. (630) 307-3800
Fax No. (630) 307-7030
Cert No. 6091 - LB No. 7055

USER NAME = Erick.Maleza	DESIGNED -	REVISED -	
	DRAWN - EM	REVISED -	
PLOT SCALE = 100.0000 ' / in.	CHECKED - EG	REVISED -	
PLOT DATE = 12/10/2021	DATE -	REVISED -	

STATE OF ILLINOIS
DEPARTMENT OF TRANSPORTATION

I-80 FROM RIDGE RD. TO ROCK RUN CREEK
JOLIET, ILLINOIS

SCALE: | SHEET 25 OF 25 SHEETS | STA. | TO STA.

F.A. RTE.	SECTION	COUNTY	TOTAL SHEETS	SHEET NO.
		WILL	25	25
		CONTRACT NO. 62N31		
		ILLINOIS FED. AID PROJECT		

IDOT W.O. 211 & 502

exp.

USER NAME = SALASL	DESIGNED - CMA	REVISED -	
	DRAWN - CMA	REVISED -	
PLOT SCALE = 0.16666667 ' / IN.	CHECKED - BRH	REVISED -	
PLOT DATE = 11/12/2025	DATE - 11/12/2025	REVISED -	

STATE OF ILLINOIS
DEPARTMENT OF TRANSPORTATION

I-80
SUE UTILITIES

SCALE: NTS | SHEET OF SHEETS | STA. | TO STA.

F.A.I. RTE.	SECTION	COUNTY	TOTAL SHEETS	SHEET NO.
80	FAI 80 21 VLS	VARIOUS	467	75
		CONTRACT NO. 62R19		
		ILLINOIS FED. AID PROJECT		

MODEL: 2D SHEET H
FILE NAME: C:\TRANSYSTEMS\PW_LOCAL\TRANSYSTEMS-PW-01\DMS31451\62R19-SHT-SUE-26.DGN

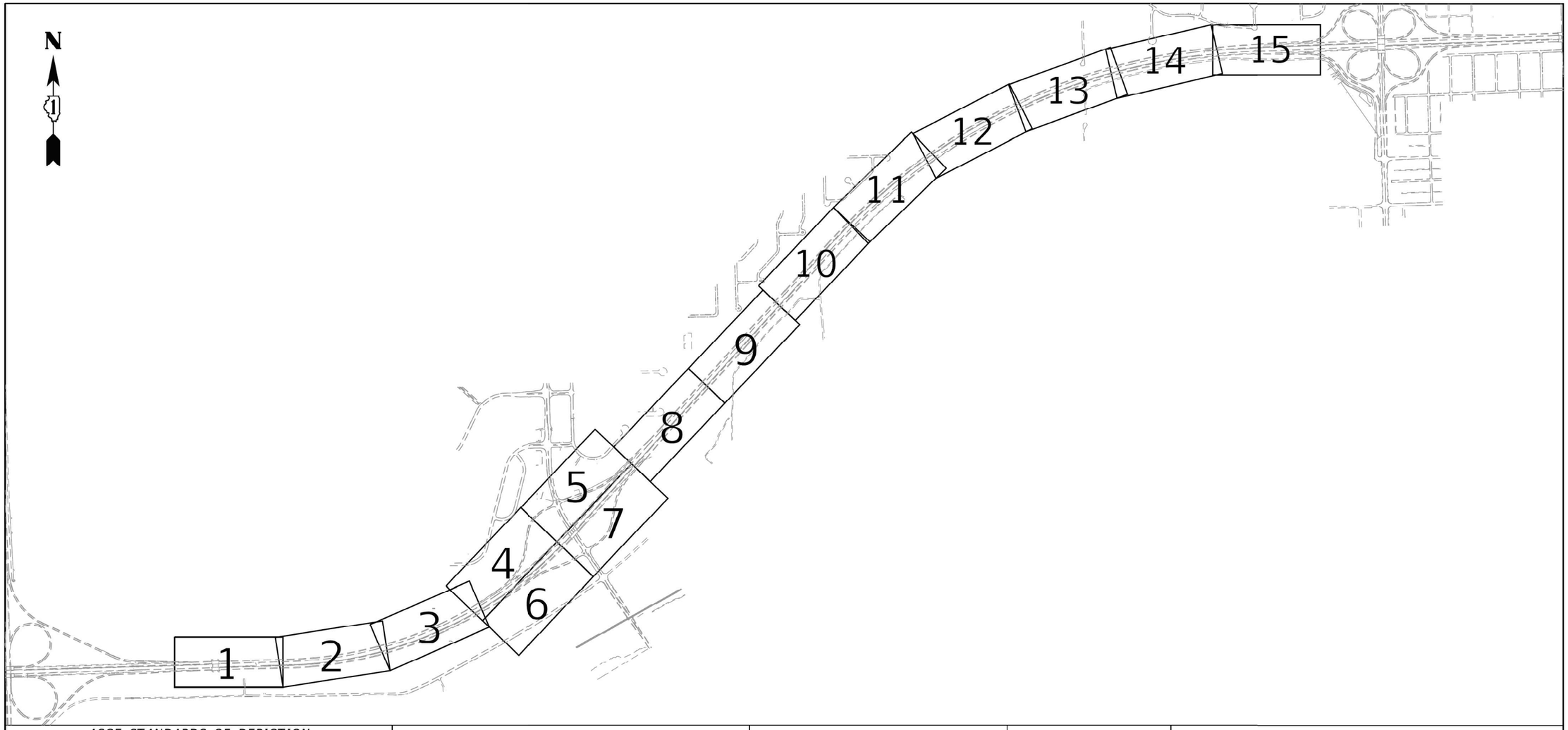

ASCE STANDARDS OF DEPICTION OF SUBSURFACE UTILITIES

QUALITY LEVEL A (QLA)
PRECISE HORIZONTAL AND VERTICAL LOCATION OF UTILITIES OBTAINED BY THE ACTUAL EXPOSURE (OR VERIFICATION OF PREVIOUSLY EXPOSED AND SURVEYED UTILITIES) USING MINIMALLY INTRUSIVE EXCAVATION EQUIPMENT TO MINIMIZE POTENTIAL FOR UTILITY DAMAGE, AND SUBSEQUENT MEASURMENT OF THE SUBSURFACE UTILITIES WITH OTHER UTILITY ATTRIBUTES SUCH AS TYPE, SIZE & MATERIAL OF UTILITY.

QUALITY LEVEL B (QLB)
INFORMATION OBTAINED THROUGH THE APPLICATION OF APPROPRIATE SURFACE GEOPHYSICAL METHODS TO DETERMINE THE EXISTENCE AND APPROXIMATE HORIZONTAL POSITION OF SUBSURFACE UTILITIES. QUALITY LEVEL B DATA SHOULD BE REPRODUCIBLE BY SURFACE GEOPHYSICS AT ANY POINT OF THEIR DEPICTION. THIS INFORMATION IS SURVEYED TO APPLICABLE TOLERANCES DEFINED BY THE PROJECT AND REDUCED ONTO PLAN DOCUMENTS.

QUALITY LEVEL C (QLC)
INFORMATION OBTAINED BY SURVEYING AND PLOTTING VISIBLE ABOVE-GROUND UTILITY FEATURES AND BY USING PROFESSIONAL JUDGEMENT IN CORRELATING THIS INFORMATION TO QUALITY LEVEL D INFORMATION.

QUALITY LEVEL D (QLD)
INFORMATION DERIVED FROM EXISITNG RECORDS OR ORAL RECOLLECTIONS.

GENERAL NOTES:

WGI INC. HAS EXERCISED ITS BEST PROFESSIONAL EXPERTISE AND GEOPHYSICAL PROSPECTING TECHNIQUES TO DEVELOP THIS MAPPING OF SUBSURFACE UTILITIES WITHIN THE PROJECT LIMITS.

WGI INC. DOES NOT GUARANTEE THAT UTILITIES SHOWN COMPRISE ALL UTILITIES WITHIN THE PROJECT AREA.

WGI's FIELD INVESTIGATION WAS PERFORMED 11/19/19 THROUGH 01/03/20. CHANGES TO UTILITIES AFTER 01/03/20 MAY HAVE BEEN MADE AND THEREFORE MAY RESULT IN VARIANCES FROM THIS PLAN IF DEEMED ADVISABLE PRIOR TO FINAL DESIGN AND CONSTRUCTION.

FIELD LOCATED UTILITIES MEET THE FEDERAL HIGHWAY ADMINISTRATION DEFINITION FOR "QUALITY LEVEL B" (QLB) STANDARDS.

ALL UTILITIES SHOWN ARE QUALITY LEVEL B (QLB) UNLESS NOTED OTHERWISE.

ALL ELECTRONIC DEPTHS PROVIDED ARE APPROXIMATE AND SHOULD BE USED FOR INFORMATIONAL PURPOSES ONLY.

UTILITY LEGEND:

A	- AERIAL
	- UNKNOWN UTILITY
O	- OIL
CTV	- CABLE TV
T	- TELEPHONE
G	- GAS
E	- ELECTRIC
E	- TRAFFIC SIGNAL/LIGHTING
W	- WATER
	- FORCE MAIN
FO	- FIBER OPTIC
	- TEST HOLE
EOI	- END OF INFORMATION
ED	- ELECTRONIC DEPTH

JOHN J. BELLIS
062-044796
REGISTERED PROFESSIONAL ENGINEER OF ILLINOIS

signature

04/06/20
date

license expires 11/30/2021

AMERICAN SURVEYING & ENGINEERING
American Surveying & Engineering, P.C.
30 N. LaSalle St., Suite 3440
Chicago, IL 60602
Phone No. (312) 277-2000

WGI™
2001 Butterfield Road, Suite 410
Downers Grove, IL 60515
Phone No. (630) 307-3800
Fax No. (630) 307-7030
Cert No. 6091 - LB No. 7055

USER NAME = Erick.Maleza	DESIGNED -	REVISED -	
	DRAWN - EM	REVISED -	
PLOT SCALE = 100.0000 ' / in.	CHECKED - EG	REVISED -	
PLOT DATE = 4/2/2020	DATE -	REVISED -	

STATE OF ILLINOIS
DEPARTMENT OF TRANSPORTATION

I-80 FROM ROCK RUN CREEK TO LARKIN AVE.
JOLIET, ILLINOIS

SCALE: | SHEET OF SHEETS | STA. TO STA.

F.A. RTE.	SECTION	COUNTY	TOTAL SHEETS	SHEET NO.
		WILL		
		CONTRACT NO. P-91-185-09		
		ILLINOIS	FED. AID PROJECT	

IDOT W.O. 212

MODEL: 2D SHEET H
FILE NAME: C:\TRANSYSTEMS\PW_LOCAL\TRANSYSTEMS-PW-01\DMS31451\62R19-SHT-SUE-27.DGN

exp.

USER NAME = SALASL	DESIGNED - CMA	REVISED -	
	DRAWN - CMA	REVISED -	
PLOT SCALE = 0.16666667 ' / IN.	CHECKED - BRH	REVISED -	
PLOT DATE = 11/12/2025	DATE - 11/12/2025	REVISED -	

STATE OF ILLINOIS
DEPARTMENT OF TRANSPORTATION

I-80
SUE UTILITIES

SCALE: NTS | SHEET OF SHEETS | STA. TO STA.

F.A.I. RTE.	SECTION	COUNTY	TOTAL SHEETS	SHEET NO.
80	FAI 80 21 VLS	VARIOUS	467	76
		CONTRACT NO. 62R19		
		ILLINOIS	FED. AID PROJECT	

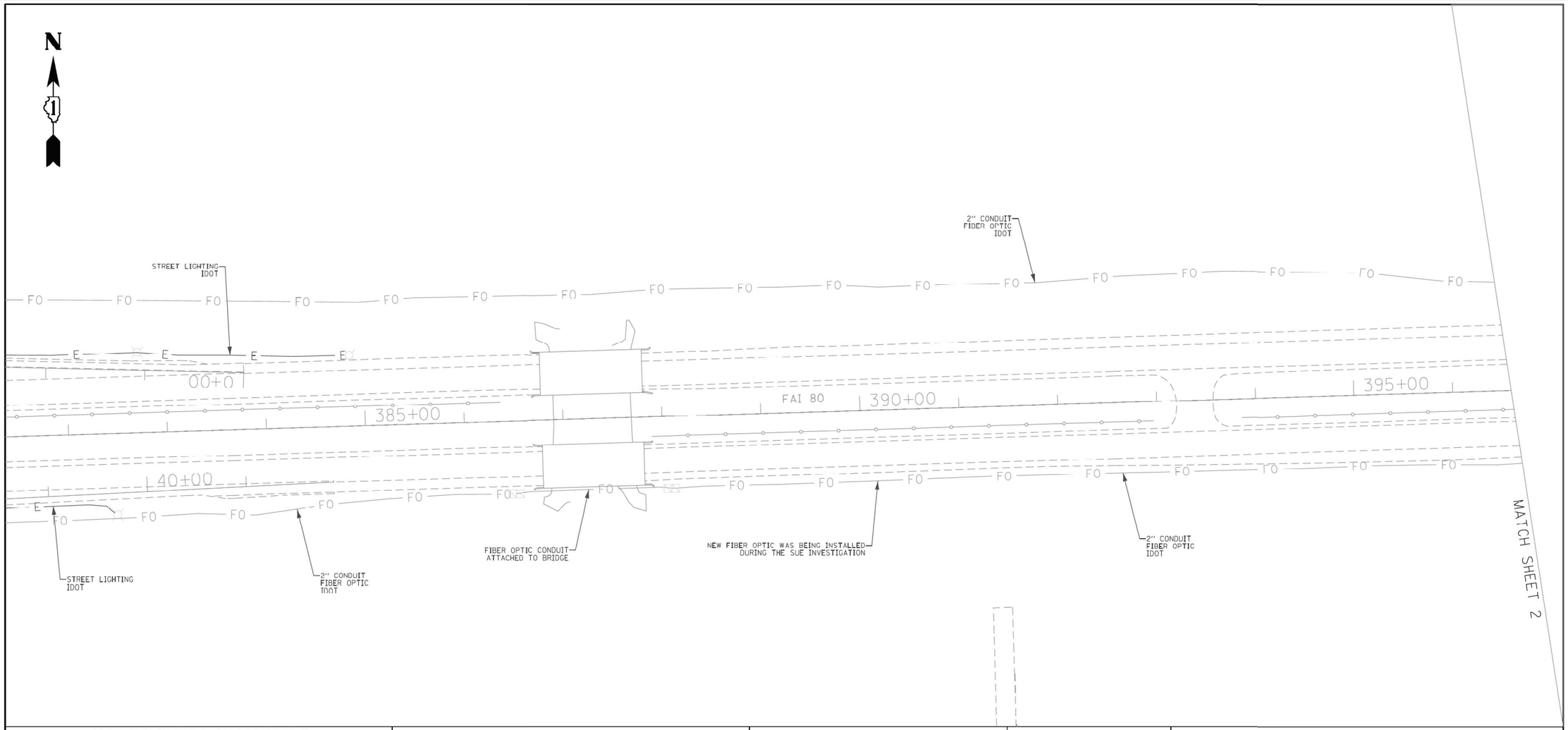

ASCE STANDARDS OF DEPICTION OF SUBSURFACE UTILITIES

QUALITY LEVEL A (QLA)
PRECISE HORIZONTAL AND VERTICAL LOCATION OF UTILITIES OBTAINED BY THE ACTUAL EXPOSURE (OR VERIFICATION OF PREVIOUSLY EXPOSED AND SURVEYED UTILITIES) USING MINIMALLY INTRUSIVE EXCAVATION EQUIPMENT TO MINIMIZE POTENTIAL FOR UTILITY DAMAGE, AND SUBSEQUENT MEASURMENT OF THE SUBSURFACE UTILITIES WITH OTHER UTILITY ATTRIBUTES SUCH AS TYPE, SIZE & MATERIAL OF UTILITY.

QUALITY LEVEL B (QLB)
INFORMATION OBTAINED THROUGH THE APPLICATION OF APPROPRIATE SURFACE GEOPHYSICAL METHODS TO DETERMINE THE EXISTENCE AND APPROXIMATE HORIZONTAL POSITION OF SUBSURFACE UTILITIES. QUALITY LEVEL B DATA SHOULD BE REPRODUCIBLE BY SURFACE GEOPHYSICS AT ANY POINT OF THEIR DEPICTION. THIS INFORMATION IS SURVEYED TO APPLICABLE TOLERANCES DEFINED BY THE PROJECT AND REDUCED ONTO PLAN DOCUMENTS.

QUALITY LEVEL C (QLC)
INFORMATION OBTAINED BY SURVEYING AND PLOTTING VISIBLE ABOVE-GROUND UTILITY FEATURES AND BY USING PROFESSIONAL JUDGEMENT IN CORRELATING THIS INFORMATION TO QUALITY LEVEL D INFORMATION.

QUALITY LEVEL D (QLD)
INFORMATION DERIVED FROM EXISITNG RECORDS OR ORAL RECOLLECTIONS.

GENERAL NOTES:

WGI INC. HAS EXERCISED ITS BEST PROFESSIONAL EXPERTISE AND GEOPHYSICAL PROSPECTING TECHNIQUES TO DEVELOP THIS MAPPING OF SUBSURFACE UTILITIES WITHIN THE PROJECT LIMITS.

WGI INC. DOES NOT GUARANTEE THAT UTILITIES SHOWN COMPRISE ALL UTILITIES WITHIN THE PROJECT AREA.

WGI's FIELD INVESTIGATION WAS PERFORMED 11/19/19 THROUGH 01/03/20. CHANGES TO UTILITIES AFTER 01/03/20 MAY HAVE BEEN MADE AND THEREFORE MAY RESULT IN VARIANCES FROM THIS PLAN IF DEEMED ADVISABLE PRIOR TO FINAL DESIGN AND CONSTRUCTION.

FIELD LOCATED UTILITIES MEET THE FEDERAL HIGHWAY ADMINISTRATION DEFINITION FOR "QUALITY LEVEL B" (QLB) STANDARDS.

ALL UTILITIES SHOWN ARE QUALITY LEVEL B (QLB) UNLESS NOTED OTHERWISE.

ALL ELECTRONIC DEPTHS PROVIDED ARE APPROXIMATE AND SHOULD BE USED FOR INFORMATIONAL PURPOSES ONLY.

UTILITY LEGEND:

- A — *AERIAL*
- *UNKNOWN UTILITY*
- O — *OIL*
- CTV — *CABLE TV*
- T — *TELEPHONE*
- G — *GAS*
- E — *ELECTRIC*
- E — *TRAFFIC SIGNAL/LIGHTING*
- W — *WATER*
- *FORCE MAIN*
- FO — *FIBER OPTIC*
- *TEST HOLE*
- EOI — *END OF INFORMATION*
- ED — *ELECTRONIC DEPTH*

JOHN J. BELLIS
062-044796
REGISTERED PROFESSIONAL ENGINEER OF ILLINOIS

John J Bellis
signature

04/06/20
date

license expires 11/30/2021

AMERICAN SURVEYING & ENGINEERING
American Surveying & Engineering, P.C.
30 N. LaSalle St., Suite 3440
Chicago, IL 60602
Phone No. (312) 277-2000

WGI™
2001 Butterfield Road, Suite 410
Downers Grove, IL 60515
Phone No. (630) 307-3800
Fax No. (630) 307-7030
Cert No. 6091 - LB No. 7055

USER NAME = Erick.Maleza	DESIGNED -	REVISED -	
	DRAWN - EM	REVISED -	
PLOT SCALE = 100.0000 ' / in.	CHECKED - EG	REVISED -	
PLOT DATE = 4/2/2020	DATE -	REVISED -	

STATE OF ILLINOIS
DEPARTMENT OF TRANSPORTATION

I-80 FROM ROCK RUN CREEK TO LARKIN AVE.
JOLIET, ILLINOIS

SCALE: | SHEET 1 OF 15 SHEETS | STA. | TO STA.

F.A. RTE.	SECTION	COUNTY	TOTAL SHEETS	SHEET NO.
		WILL	15	1
		CONTRACT NO. P-91-185-09		
		ILLINOIS	FED. AID PROJECT	

IDOT W.O. 212

exp.

USER NAME = SALASL	DESIGNED - CMA	REVISED -	
	DRAWN - CMA	REVISED -	
PLOT SCALE = 0.16666667 ' / IN.	CHECKED - BRH	REVISED -	
PLOT DATE = 11/12/2025	DATE - 11/12/2025	REVISED -	

STATE OF ILLINOIS
DEPARTMENT OF TRANSPORTATION

I-80
SUE UTILITIES

SCALE: NTS | SHEET OF SHEETS | STA. | TO STA.

F.A.I. RTE.	SECTION	COUNTY	TOTAL SHEETS	SHEET NO.
80	FAI 80 21 VLS	VARIOUS	467	77
		CONTRACT NO. 62R19		
		ILLINOIS	FED. AID PROJECT	

MODEL: 2D SHEET H
FILE NAME: C:\TRANSYSTEMS\PW_LOCAL\TRANSYSTEMS-PW-01\DMS31451\62R19-SHT-SUE-28.DGN

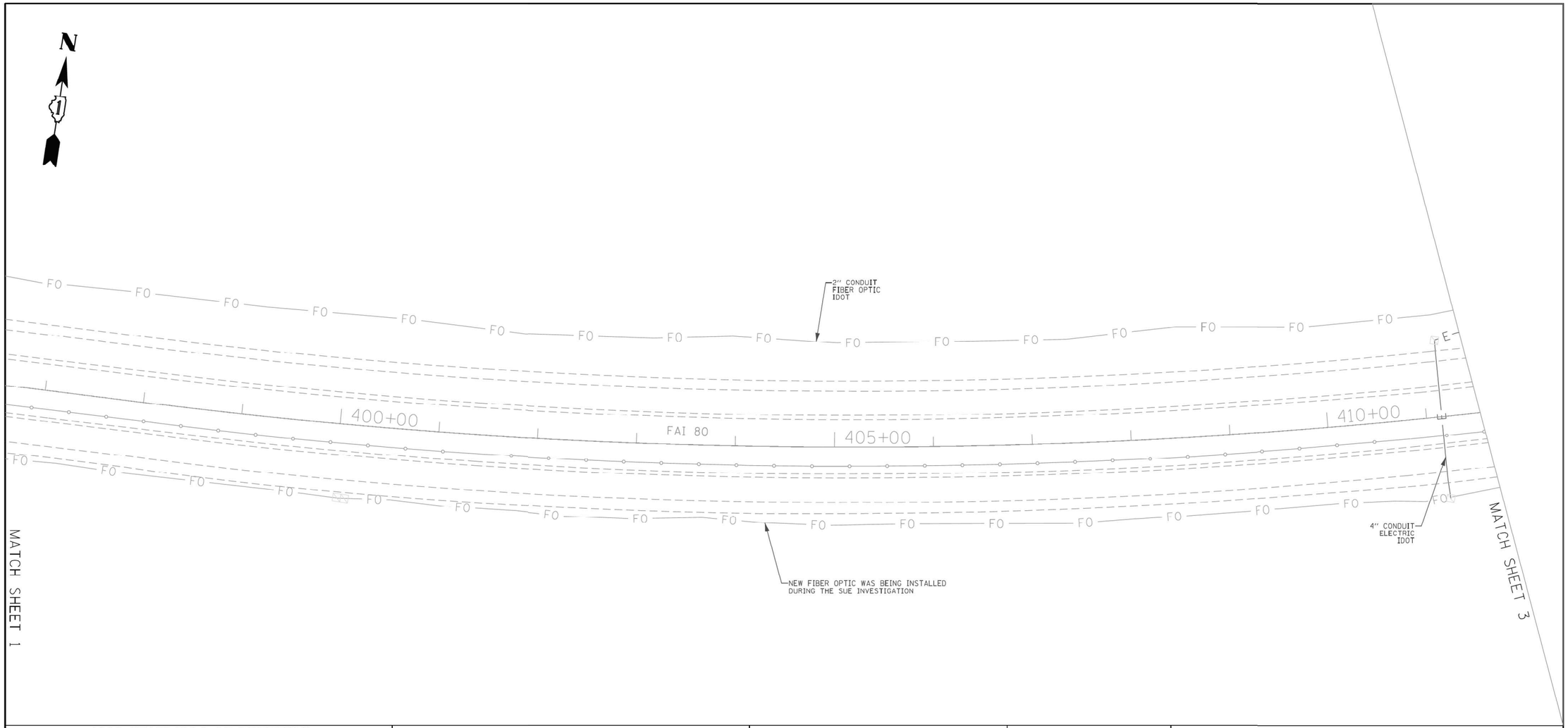

ASCE STANDARDS OF DEPICTION OF SUBSURFACE UTILITIES

QUALITY LEVEL A (QLA)
PRECISE HORIZONTAL AND VERTICAL LOCATION OF UTILITIES OBTAINED BY THE ACTUAL EXPOSURE (OR VERIFICATION OF PREVIOUSLY EXPOSED AND SURVEYED UTILITIES) USING MINIMALLY INTRUSIVE EXCAVATION EQUIPMENT TO MINIMIZE POTENTIAL FOR UTILITY DAMAGE, AND SUBSEQUENT MEASURMENT OF THE SUBSURFACE UTILITIES WITH OTHER UTILITY ATTRIBUTES SUCH AS TYPE, SIZE & MATERIAL OF UTILITY.

QUALITY LEVEL B (QLB)
INFORMATION OBTAINED THROUGH THE APPLICATION OF APPROPRIATE SURFACE GEOPHYSICAL METHODS TO DETERMINE THE EXISTENCE AND APPROXIMATE HORIZONTAL POSITION OF SUBSURFACE UTILITIES. QUALITY LEVEL B DATA SHOULD BE REPRODUCIBLE BY SURFACE GEOPHYSICS AT ANY POINT OF THEIR DEPICTION. THIS INFORMATION IS SURVEYED TO APPLICABLE TOLERANCES DEFINED BY THE PROJECT AND REDUCED ONTO PLAN DOCUMENTS.

QUALITY LEVEL C (QLC)
INFORMATION OBTAINED BY SURVEYING AND PLOTTING VISIBLE ABOVE-GROUND UTLITY FEATURES AND BY USING PROFESSIONAL JUDGEMENT IN CORRELATING THIS INFORMATION TO QUALITY LEVEL D INFORMATION.

QUALITY LEVEL D (OLD)
INFORMATION DERIVED FROM EXISITNG RECORDS OR ORAL RECOLLECTIONS.

GENERAL NOTES:

WGI INC. HAS EXERCISED ITS BEST PROFESSIONAL EXPERTISE AND GEOPHYSICAL PROSPECTING TECHNIQUES TO DEVELOP THIS MAPPING OF SUBSURFACE UTILITIES WITHIN THE PROJECT LIMITS.

WGI INC. DOES NOT GUARANTEE THAT UTILITIES SHOWN COMPRISE ALL UTILITIES WITHIN THE PROJECT AREA.

WGI's FIELD INVESTIGATION WAS PERFORMED 11/19/19 THROUGH 01/03/20. CHANGES TO UTILITIES AFTER 01/03/20 MAY HAVE BEEN MADE AND THEREFORE MAY RESULT IN VARIANCES FROM THIS PLAN IF DEEMED ADVISABLE PRIOR TO FINAL DESIGN AND CONSTRUCTION.

FIELD LOCATED UTILITIES MEET THE FEDERAL HIGHWAY ADMINISTRATION DEFINITION FOR "QUALITY LEVEL B" (QLB) STANDARDS.

ALL UTILITIES SHOWN ARE QUALITY LEVEL B (QLB) UNLESS NOTED OTHERWISE.

ALL ELECTRONIC DEPTHS PROVIDED ARE APPROXIMATE AND SHOULD BE USED FOR INFORMATIONAL PURPOSES ONLY.

UTILITY LEGEND:

- A — AERIAL
- UNKNOWN UTILITY
- O — OIL
- CTV — CABLE TV
- T — TELEPHONE
- G — GAS
- E — ELECTRIC
- E — TRAFFIC SIGNAL/LIGHTING
- W — WATER
- FM — FORCE MAIN
- FO — FIBER OPTIC
- TEST HOLE
- EOI — END OF INFORMATION
- ED — ELECTRONIC DEPTH

JOHN J. BELLIS
062-044796
REGISTERED PROFESSIONAL ENGINEER OF ILLINOIS

signature
04/06/20
date
license expires 11/30/2021

AMERICAN SURVEYING & ENGINEERING
American Surveying & Engineering, P.C.
30 N. LaSalle St., Suite 3440
Chicago, IL 60602
Phone No. (312) 277-2000

WGI
2001 Butterfield Road, Suite 410
Downers Grove, IL 60515
Phone No. (630) 307-3800
Fax No. (630) 307-7030
Cert No. 6091 - LB No. 7055

USER NAME = Erick.Maleza	DESIGNED -	REVISED -	
	DRAWN - EM	REVISED -	
PLOT SCALE = 100.0000 ' / in.	CHECKED - EG	REVISED -	
PLOT DATE = 3/30/2020	DATE -	REVISED -	

STATE OF ILLINOIS
DEPARTMENT OF TRANSPORTATION

I-80 FROM ROCK RUN CREEK TO LARKIN AVE.
JOLIET, ILLINOIS

SCALE: | SHEET 2 OF 15 SHEETS | STA. TO STA.

F.A. RTE.	SECTION	COUNTY	TOTAL SHEETS	SHEET NO.
		WILL	15	2
		CONTRACT NO. P-91-185-09		
		ILLINOIS	FED. AID PROJECT	

IDOT W.O. 212

exp.

USER NAME = SALASL	DESIGNED - CMA	REVISED -	
	DRAWN - CMA	REVISED -	
PLOT SCALE = 0.16666667 ' / IN.	CHECKED - BRH	REVISED -	
PLOT DATE = 11/12/2025	DATE - 11/12/2025	REVISED -	

STATE OF ILLINOIS
DEPARTMENT OF TRANSPORTATION

I-80
SUE UTILITIES

SCALE: NTS | SHEET OF SHEETS | STA. TO STA.

F.A.I. RTE.	SECTION	COUNTY	TOTAL SHEETS	SHEET NO.
80	FAI 80 21 VLS	VARIOUS	467	78
		CONTRACT NO. 62R19		
		ILLINOIS	FED. AID PROJECT	

MODEL: 2D SHEET H
FILE NAME: C:\TRANSYSTEMS\PW_LOCAL\TRANSYSTEMS-PW-01\D0MS31451\62R19-SHT-SUE-29.DGN

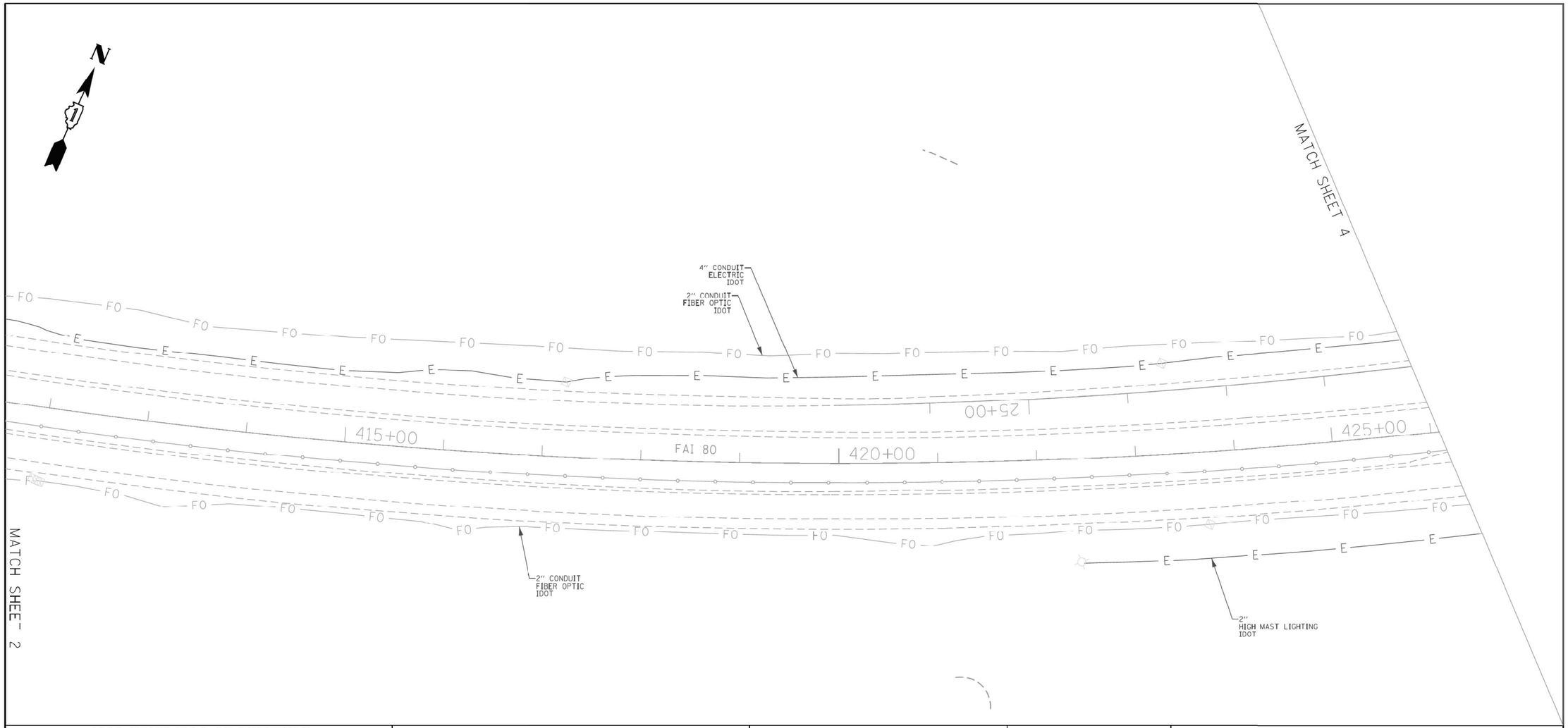

ASCE STANDARDS OF DEPICTION OF SUBSURFACE UTILITIES

QUALITY LEVEL A (QLA)
PRECISE HORIZONTAL AND VERTICAL LOCATION OF UTILITIES OBTAINED BY THE ACTUAL EXPOSURE (OR VERIFICATION OF PREVIOUSLY EXPOSED AND SURVEYED UTILITIES) USING MINIMALLY INTRUSIVE EXCAVATION EQUIPMENT TO MINIMIZE POTENTIAL FOR UTILITY DAMAGE, AND SUBSEQUENT MEASURMENT OF THE SUBSURFACE UTILITIES WITH OTHER UTILITY ATTRIBUTES SUCH AS TYPE, SIZE & MATERIAL OF UTILITY.

QUALITY LEVEL B (QLB)
INFORMATION OBTAINED THROUGH THE APPLICATION OF APPROPRIATE SURFACE GEOPHYSICAL METHODS TO DETERMINE THE EXISTENCE AND APPROXIMATE HORIZONTAL POSITION OF SUBSURFACE UTILITIES. QUALITY LEVEL B DATA SHOULD BE REPRODUCIBLE BY SURFACE GEOPHYSICS AT ANY POINT OF THEIR DEPICTION. THIS INFORMATION IS SURVEYED TO APPLICABLE TOLERANCES DEFINED BY THE PROJECT AND REDUCED ONTO PLAN DOCUMENTS.

QUALITY LEVEL C (QLC)
INFORMATION OBTAINED BY SURVEYING AND PLOTTING VISIBLE ABOVE-GROUND UTLITY FEATURES AND BY USING PROFESSIONAL JUDGEMENT IN CORRELATING THIS INFORMATION TO QUALITY LEVEL D INFORMATION.

QUALITY LEVEL D (OLD)
INFORMATION DERIVED FROM EXISITNG RECORDS OR ORAL RECOLLECTIONS.

GENERAL NOTES:

WGI INC. HAS EXERCISED ITS BEST PROFESSIONAL EXPERTISE AND GEOPHYSICAL PROSPECTING TECHNIQUES TO DEVELOP THIS MAPPING OF SUBSURFACE UTILITIES WITHIN THE PROJECT LIMITS.

WGI INC. DOES NOT GUARANTEE THAT UTILITIES SHOWN COMPRISE ALL UTILITIES WITHIN THE PROJECT AREA.

WGI's FIELD INVESTIGATION WAS PERFORMED 11/19/19 THROUGH 01/03/20. CHANGES TO UTILITIES AFTER 01/03/20 MAY HAVE BEEN MADE AND THEREFORE MAY RESULT IN VARIANCES FROM THIS PLAN IF DEEMED ADVISABLE PRIOR TO FINAL DESIGN AND CONSTRUCTION.

FIELD LOCATED UTILITIES MEET THE FEDERAL HIGHWAY ADMINISTRATION DEFINITION FOR "QUALITY LEVEL B" (QLB) STANDARDS.

ALL UTILITIES SHOWN ARE QUALITY LEVEL B (QLB) UNLESS NOTED OTHERWISE.

ALL ELECTRONIC DEPTHS PROVIDED ARE APPROXIMATE AND SHOULD BE USED FOR INFORMATIONAL PURPOSES ONLY.

UTILITY LEGEND:

- A — *AERIAL*
- *UNKNOWN UTILITY*
- O — *OIL*
- CTV — *CABLE TV*
- T — *TELEPHONE*
- G — *GAS*
- E — *ELECTRIC*
- E — *TRAFFIC SIGNAL/LIGHTING*
- W — *WATER*
- *FORCE MAIN*
- FO — *FIBER OPTIC*
- *TEST HOLE*
- EOI — *END OF INFORMATION*
- ED — *ELECTRONIC DEPTH*

JOHN J. BELLIS
062-044796
REGISTERED PROFESSIONAL ENGINEER OF ILLINOIS

John J Bellis
signature

04/06/20
date

license expires 11/30/2021

AMERICAN SURVEYING & ENGINEERING
American Surveying & Engineering, P.C.
30 N. LaSalle St., Suite 3440
Chicago, IL 60602
Phone No. (312) 277-2000

WGI™
2001 Butterfield Road, Suite 410
Downers Grove, IL 60515
Phone No. (630) 307-3800
Fax No. (630) 307-7030
Cert No. 6091 - LB No. 7055

USER NAME = Erick.Maleza	DESIGNED -	REVISED -	
	DRAWN - EM	REVISED -	
PLOT SCALE = 100.0000 ' / in.	CHECKED - EG	REVISED -	
PLOT DATE = 3/30/2020	DATE -	REVISED -	

STATE OF ILLINOIS
DEPARTMENT OF TRANSPORTATION

I-80 FROM ROCK RUN CREEK TO LARKIN AVE.
JOLIET, ILLINOIS

SCALE: | SHEET 3 OF 15 SHEETS | STA. TO STA.

F.A. RTE.	SECTION	COUNTY	TOTAL SHEETS	SHEET NO.
		WILL	15	3
		CONTRACT NO. P-91-185-09		
		ILLINOIS	FED. AID PROJECT	

IDOT W.O. 212

exp.

USER NAME = SALASL	DESIGNED - CMA	REVISED -	
	DRAWN - CMA	REVISED -	
PLOT SCALE = 0.16666667 ' / IN.	CHECKED - BRH	REVISED -	
PLOT DATE = 11/12/2025	DATE - 11/12/2025	REVISED -	

STATE OF ILLINOIS
DEPARTMENT OF TRANSPORTATION

I-80
SUE UTILITIES

SCALE: NTS | SHEET OF SHEETS | STA. TO STA.

F.A.I. RTE.	SECTION	COUNTY	TOTAL SHEETS	SHEET NO.
80	FAI 80 21 VLS	VARIOUS	467	79
		CONTRACT NO. 62R19		
		ILLINOIS	FED. AID PROJECT	

MODEL: 2D SHEET H
FILE NAME: C:\TRANSYSTEMS\PW_LOCAL\TRANSYSTEMS-PW-01\MS3145\1628\19-SHT-SUE-30.DGN

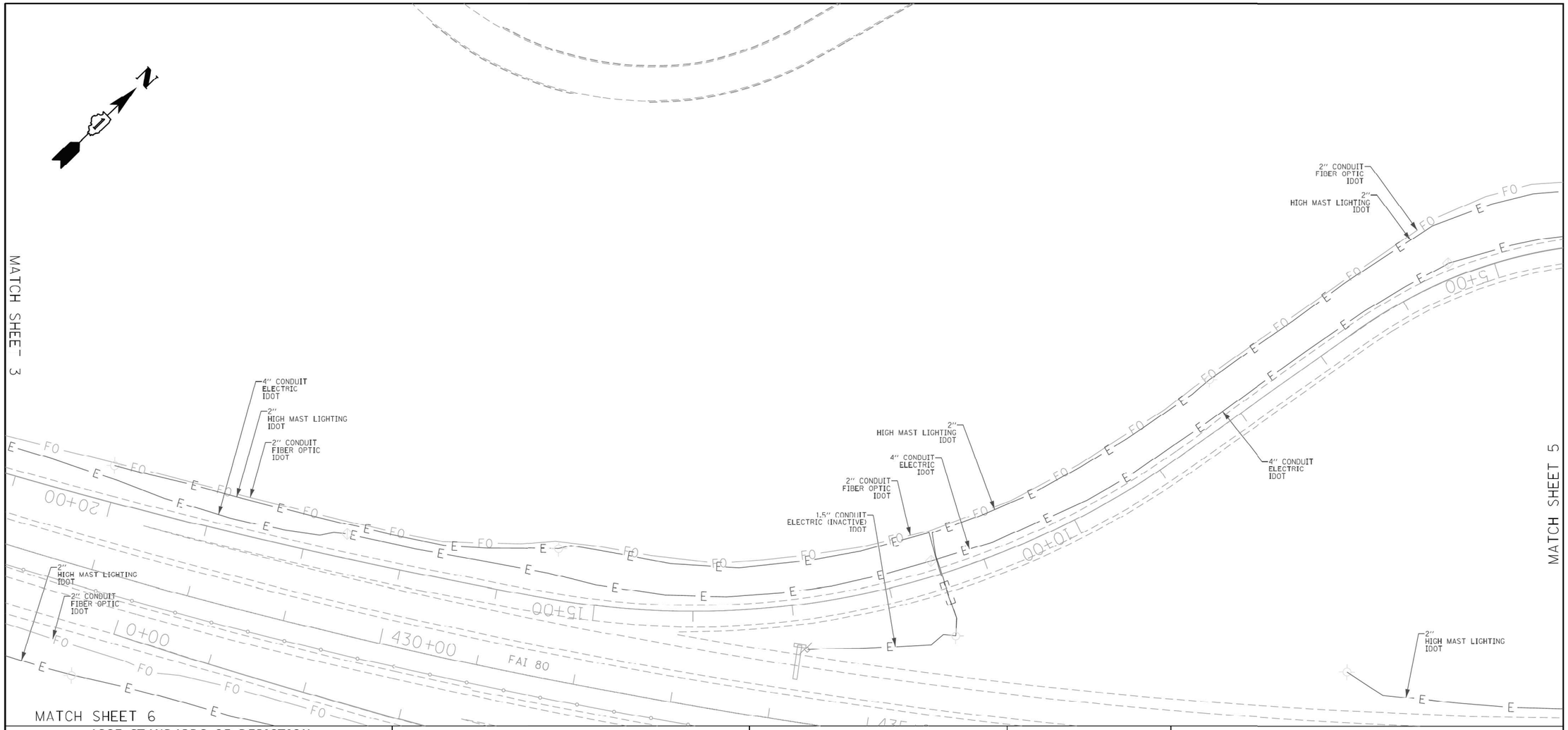

ASCE STANDARDS OF DEPICTION OF SUBSURFACE UTILITIES

QUALITY LEVEL A (QLA)
PRECISE HORIZONTAL AND VERTICAL LOCATION OF UTILITIES OBTAINED BY THE ACTUAL EXPOSURE (OR VERIFICATION OF PREVIOUSLY EXPOSED AND SURVEYED UTILITIES) USING MINIMALLY INTRUSIVE EXCAVATION EQUIPMENT TO MINIMIZE POTENTIAL FOR UTILITY DAMAGE, AND SUBSEQUENT MEASURMENT OF THE SUBSURFACE UTILITIES WITH OTHER UTILITY ATTRIBUTES SUCH AS TYPE, SIZE & MATERIAL OF UTILITY.

QUALITY LEVEL B (QLB)
INFORMATION OBTAINED THROUGH THE APPLICATION OF APPROPRIATE SURFACE GEOPHYSICAL METHODS TO DETERMINE THE EXISTENCE AND APPROXIMATE HORIZONTAL POSITION OF SUBSURFACE UTILITIES. QUALITY LEVEL B DATA SHOULD BE REPRODUCIBLE BY SURFACE GEOPHYSICS AT ANY POINT OF THEIR DEPICTION. THIS INFORMATION IS SURVEYED TO APPLICABLE TOLERANCES DEFINED BY THE PROJECT AND REDUCED ONTO PLAN DOCUMENTS.

QUALITY LEVEL C (QLC)
INFORMATION OBTAINED BY SURVEYING AND PLOTTING VISIBLE ABOVE-GROUND UTLITY FEATURES AND BY USING PROFESSIONAL JUDGEMENT IN CORRELATING THIS INFORMATION TO QUALITY LEVEL D INFORMATION.

QUALITY LEVEL D (OLD)
INFORMATION DERIVED FROM EXISITNG RECORDS OR ORAL RECOLLECTIONS.

GENERAL NOTES:

WGI INC. HAS EXERCISED ITS BEST PROFESSIONAL EXPERTISE AND GEOPHYSICAL PROSPECTING TECHNIQUES TO DEVELOP THIS MAPPING OF SUBSURFACE UTILITIES WITHIN THE PROJECT LIMITS.

WGI INC. DOES NOT GUARANTEE THAT UTILITIES SHOWN COMPRISE ALL UTILITIES WITHIN THE PROJECT AREA.

WGI's FIELD INVESTIGATION WAS PERFORMED 11/19/19 THROUGH 01/03/20. CHANGES TO UTILITIES AFTER 01/03/20 MAY HAVE BEEN MADE AND THEREFORE MAY RESULT IN VARIANCES FROM THIS PLAN IF DEEMED ADVISABLE PRIOR TO FINAL DESIGN AND CONSTRUCTION.

FIELD LOCATED UTILITIES MEET THE FEDERAL HIGHWAY ADMINISTRATION DEFINITION FOR "QUALITY LEVEL B" (QLB) STANDARDS.

ALL UTILITIES SHOWN ARE QUALITY LEVEL B (QLB) UNLESS NOTED OTHERWISE.

ALL ELECTRONIC DEPTHS PROVIDED ARE APPROXIMATE AND SHOULD BE USED FOR INFORMATIONAL PURPOSES ONLY.

UTILITY LEGEND:

A	- AERIAL
	- UNKNOWN UTILITY
O	- OIL
CTV	- CABLE TV
T	- TELEPHONE
G	- GAS
E	- ELECTRIC
E	- TRAFFIC SIGNAL/LIGHTING
W	- WATER
	- FORCE MAIN
FO	- FIBER OPTIC
	- TEST HOLE
EOI	- END OF INFORMATION
ED	- ELECTRONIC DEPTH

JOHN J. BELLIS
062-044796
REGISTERED PROFESSIONAL ENGINEER OF ILLINOIS

John J Bellis
signature

04/06/20
date

license expires 11/30/2021

AMERICAN SURVEYING & ENGINEERING
American Surveying & Engineering, P.C.
30 N. LaSalle St., Suite 3440
Chicago, IL 60602
Phone No. (312) 277-2000

WGI
2001 Butterfield Road, Suite 410
Downers Grove, IL 60515
Phone No. (630) 307-3800
Fax No. (630) 307-7030
Cert No. 6091 - LB No. 7055

USER NAME = Erick.Maleza	DESIGNED -	REVISED -	
	DRAWN - EM	REVISED -	
PLOT SCALE = 100.0000 ' / in.	CHECKED - EG	REVISED -	
PLOT DATE = 3/30/2020	DATE -	REVISED -	

STATE OF ILLINOIS
DEPARTMENT OF TRANSPORTATION

I-80 FROM ROCK RUN CREEK TO LARKIN AVE.
JOLIET, ILLINOIS

SCALE: | SHEET 4 OF 15 SHEETS | STA. | TO STA.

F.A. RTE.	SECTION	COUNTY	TOTAL SHEETS	SHEET NO.
		WILL	15	4
		CONTRACT NO. P-91-185-09		
		ILLINOIS	FED. AID PROJECT	

IDOT W.O. 212

exp.

USER NAME = SALASL	DESIGNED - CMA	REVISED -	
	DRAWN - CMA	REVISED -	
PLOT SCALE = 0.16666667 ' / IN.	CHECKED - BRH	REVISED -	
PLOT DATE = 11/12/2025	DATE - 11/12/2025	REVISED -	

STATE OF ILLINOIS
DEPARTMENT OF TRANSPORTATION

I-80
SUE UTILITIES

SCALE: NTS | SHEET OF SHEETS | STA. | TO STA.

F.A.I. RTE.	SECTION	COUNTY	TOTAL SHEETS	SHEET NO.
80	FAI 80 21 VLS	VARIOUS	467	80
		CONTRACT NO. 62R19		
		ILLINOIS	FED. AID PROJECT	

MODEL: 2D SHEET H
FILE NAME: C:\TRANSYSTEMS\PW_LOCAL\TRANSYSTEMS-PW-01\DMS31451\62R19-SHT-SUE-31.DGN

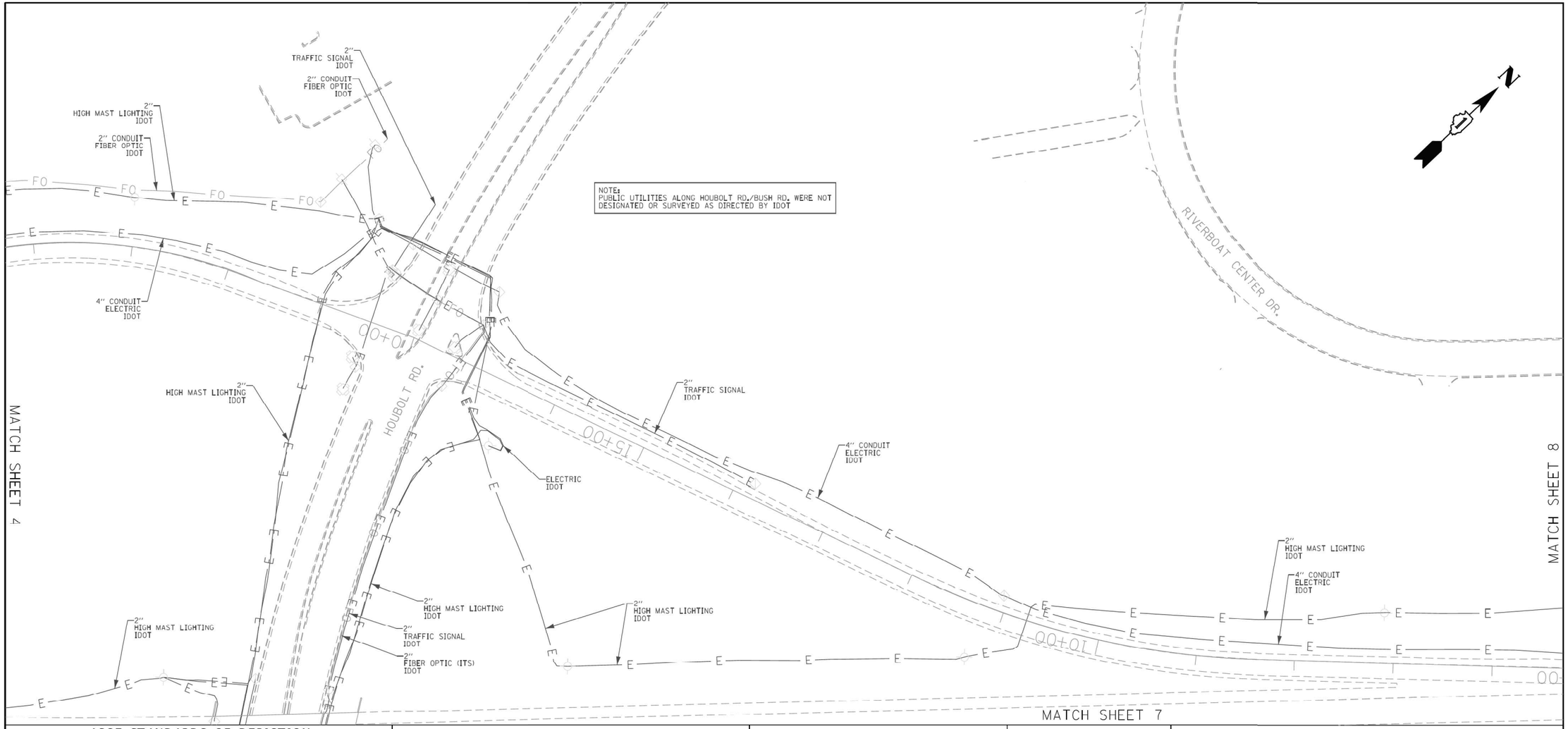

ASCE STANDARDS OF DEPICTION OF SUBSURFACE UTILITIES

QUALITY LEVEL A (QLA)
PRECISE HORIZONTAL AND VERTICAL LOCATION OF UTILITIES OBTAINED BY THE ACTUAL EXPOSURE (OR VERIFICATION OF PREVIOUSLY EXPOSED AND SURVEYED UTILITIES) USING MINIMALLY INTRUSIVE EXCAVATION EQUIPMENT TO MINIMIZE POTENTIAL FOR UTILITY DAMAGE, AND SUBSEQUENT MEASURMENT OF THE SUBSURFACE UTILITIES WITH OTHER UTILITY ATTRIBUTES SUCH AS TYPE, SIZE & MATERIAL OF UTILITY.

QUALITY LEVEL B (QLB)
INFORMATION OBTAINED THROUGH THE APPLICATION OF APPROPRIATE SURFACE GEOPHYSICAL METHODS TO DETERMINE THE EXISTENCE AND APPROXIMATE HORIZONTAL POSITION OF SUBSURFACE UTILITIES. QUALITY LEVEL B DATA SHOULD BE REPRODUCIBLE BY SURFACE GEOPHYSICS AT ANY POINT OF THEIR DEPICTION. THIS INFORMATION IS SURVEYED TO APPLICABLE TOLERANCES DEFINED BY THE PROJECT AND REDUCED ONTO PLAN DOCUMENTS.

QUALITY LEVEL C (QLC)
INFORMATION OBTAINED BY SURVEYING AND PLOTTING VISIBLE ABOVE-GROUND UTLITY FEATURES AND BY USING PROFESSIONAL JUDGEMENT IN CORRELATING THIS INFORMATION TO QUALITY LEVEL D INFORMATION.

QUALITY LEVEL D (OLD)
INFORMATION DERIVED FROM EXISITNG RECORDS OR ORAL RECOLLECTIONS.

GENERAL NOTES:

WGI INC. HAS EXERCISED ITS BEST PROFESSIONAL EXPERTISE AND GEOPHYSICAL PROSPECTING TECHNIQUES TO DEVELOP THIS MAPPING OF SUBSURFACE UTILITIES WITHIN THE PROJECT LIMITS.

WGI INC. DOES NOT GUARANTEE THAT UTILITIES SHOWN COMPRISE ALL UTILITIES WITHIN THE PROJECT AREA.

WGI's FIELD INVESTIGATION WAS PERFORMED 11/19/19 THROUGH 01/03/20. CHANGES TO UTILITIES AFTER 01/03/20 MAY HAVE BEEN MADE AND THEREFORE MAY RESULT IN VARIANCES FROM THIS PLAN IF DEEMED ADVISABLE PRIOR TO FINAL DESIGN AND CONSTRUCTION.

FIELD LOCATED UTILITIES MEET THE FEDERAL HIGHWAY ADMINISTRATION DEFINITION FOR "QUALITY LEVEL B" (QLB) STANDARDS.

ALL UTILITIES SHOWN ARE QUALITY LEVEL B (QLB) UNLESS NOTED OTHERWISE.

ALL ELECTRONIC DEPTHS PROVIDED ARE APPROXIMATE AND SHOULD BE USED FOR INFORMATIONAL PURPOSES ONLY.

UTILITY LEGEND:

A	- AERIAL
	- UNKNOWN UTILITY
O	- OIL
CTV	- CABLE TV
T	- TELEPHONE
G	- GAS
E	- ELECTRIC
E	- TRAFFIC SIGNAL/LIGHTING
W	- WATER
	- FORCE MAIN
FO	- FIBER OPTIC
	- TEST HOLE
EOI	- END OF INFORMATION
ED	- ELECTRONIC DEPTH

JOHN J. BELLIS
062-044796
REGISTERED PROFESSIONAL ENGINEER OF ILLINOIS

John J Bellis
signature

04/06/20
date

license expires 11/30/2021

AMERICAN SURVEYING & ENGINEERING
American Surveying & Engineering, P.C.
30 N. LaSalle St., Suite 3440
Chicago, IL 60602
Phone No. (312) 277-2000

WGI™
2001 Butterfield Road, Suite 410
Downers Grove, IL 60515
Phone No. (630) 307-3800
Fax No. (630) 307-7030
Cert No. 6091 - LB No. 7055

USER NAME = Erick.Maleza	DESIGNED -	REVISED -	
	DRAWN - EM	REVISED -	
PLOT SCALE = 100.0000 ' / in.	CHECKED - EG	REVISED -	
PLOT DATE = 4/3/2020	DATE -	REVISED -	

STATE OF ILLINOIS
DEPARTMENT OF TRANSPORTATION

I-80 FROM ROCK RUN CREEK TO LARKIN AVE.
JOLIET, ILLINOIS

SCALE: | SHEET 5 OF 15 SHEETS | STA. | TO STA.

F.A. RTE.	SECTION	COUNTY	TOTAL SHEETS	SHEET NO.
		WILL	15	5
		CONTRACT NO. P-91-185-09		
		ILLINOIS	FED. AID PROJECT	

IDOT W.O. 212

exp.

USER NAME = SALASL	DESIGNED - CMA	REVISED -	
	DRAWN - CMA	REVISED -	
PLOT SCALE = 0.16666667 ' / IN.	CHECKED - BRH	REVISED -	
PLOT DATE = 11/12/2025	DATE - 11/12/2025	REVISED -	

STATE OF ILLINOIS
DEPARTMENT OF TRANSPORTATION

I-80
SUE UTILITIES

SCALE: NTS | SHEET OF SHEETS | STA. | TO STA.

F.A.I. RTE.	SECTION	COUNTY	TOTAL SHEETS	SHEET NO.
80	FAI 80 21 VLS	VARIOUS	467	81
		CONTRACT NO. 62R19		
		ILLINOIS	FED. AID PROJECT	

MODEL: 2D SHEET H
FILE NAME: C:\TRANSYSTEMS\PW_LOCAL\TRANSYSTEMS-PW_01\DMS31451\62R19-SHT-SUE-32.DGN

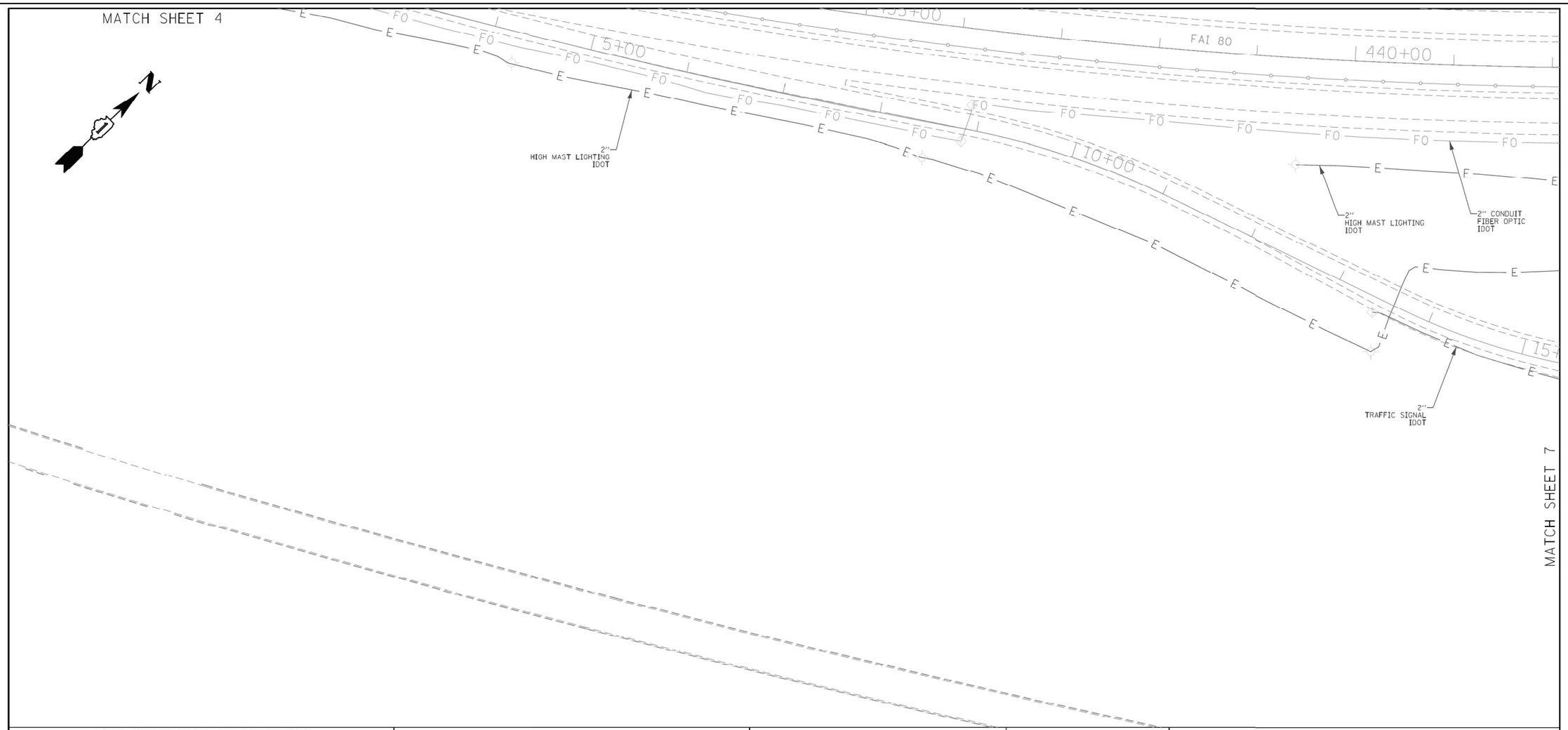

ASCE STANDARDS OF DEPICTION OF SUBSURFACE UTILITIES

QUALITY LEVEL A (QLA)
PRECISE HORIZONTAL AND VERTICAL LOCATION OF UTILITIES OBTAINED BY THE ACTUAL EXPOSURE (OR VERIFICATION OF PREVIOUSLY EXPOSED AND SURVEYED UTILITIES) USING MINIMALLY INTRUSIVE EXCAVATION EQUIPMENT TO MINIMIZE POTENTIAL FOR UTILITY DAMAGE, AND SUBSEQUENT MEASURMENT OF THE SUBSURFACE UTILITIES WITH OTHER UTILITY ATTRIBUTES SUCH AS TYPE, SIZE & MATERIAL OF UTILITY.

QUALITY LEVEL B (QLB)
INFORMATION OBTAINED THROUGH THE APPLICATION OF APPROPRIATE SURFACE GEOPHYSICAL METHODS TO DETERMINE THE EXISTENCE AND APPROXIMATE HORIZONTAL POSITION OF SUBSURFACE UTILITIES. QUALITY LEVEL B DATA SHOULD BE REPRODUCIBLE BY SURFACE GEOPHYSICS AT ANY POINT OF THEIR DEPICTION. THIS INFORMATION IS SURVEYED TO APPLICABLE TOLERANCES DEFINED BY THE PROJECT AND REDUCED ONTO PLAN DOCUMENTS.

QUALITY LEVEL C (QLC)
INFORMATION OBTAINED BY SURVEYING AND PLOTTING VISIBLE ABOVE-GROUND UTLITY FEATURES AND BY USING PROFESSIONAL JUDGEMENT IN CORRELATING THIS INFORMATION TO QUALITY LEVEL D INFORMATION.

QUALITY LEVEL D (QLD)
INFORMATION DERIVED FROM EXISITNG RECORDS OR ORAL RECOLLECTIONS.

GENERAL NOTES:

WGI INC. HAS EXERCISED ITS BEST PROFESSIONAL EXPERTISE AND GEOPHYSICAL PROSPECTING TECHNIQUES TO DEVELOP THIS MAPPING OF SUBSURFACE UTILITIES WITHIN THE PROJECT LIMITS.

WGI INC. DOES NOT GUARANTEE THAT UTILITIES SHOWN COMPRISE ALL UTILITIES WITHIN THE PROJECT AREA.

WGI's FIELD INVESTIGATION WAS PERFORMED 11/19/19 THROUGH 01/03/20. CHANGES TO UTILITIES AFTER 01/03/20 MAY HAVE BEEN MADE AND THEREFORE MAY RESULT IN VARIANCES FROM THIS PLAN IF DEEMED ADVISABLE PRIOR TO FINAL DESIGN AND CONSTRUCTION.

FIELD LOCATED UTILITIES MEET THE FEDERAL HIGHWAY ADMINISTRATION DEFINITION FOR "QUALITY LEVEL B" (QLB) STANDARDS.

ALL UTILITIES SHOWN ARE QUALITY LEVEL B (QLB) UNLESS NOTED OTHERWISE.

ALL ELECTRONIC DEPTHS PROVIDED ARE APPROXIMATE AND SHOULD BE USED FOR INFORMATIONAL PURPOSES ONLY.

UTILITY LEGEND:

- A — AERIAL
- UNKNOWN UTILITY
- O — OIL
- CTV — CABLE TV
- T — TELEPHONE
- G — GAS
- E — ELECTRIC
- E — TRAFFIC SIGNAL/LIGHTING
- W — WATER
- FORCE MAIN
- FO — FIBER OPTIC
- TEST HOLE
- EOI — END OF INFORMATION
- ED — ELECTRONIC DEPTH

JOHN J. BELLIS
062-044796
REGISTERED PROFESSIONAL ENGINEER OF ILLINOIS

John J Bellis
signature

04/06/20
date

license expires 11/30/2021

AMERICAN SURVEYING & ENGINEERING
American Surveying & Engineering, P.C.
30 N. LaSalle St., Suite 3440
Chicago, IL 60602
Phone No. (312) 277-2000

WGI™
2001 Butterfield Road, Suite 410
Downers Grove, IL 60515
Phone No. (630) 307-3800
Fax No. (630) 307-7030
Cert No. 6091 - LB No. 7055

USER NAME = Erick.Maleza	DESIGNED -	REVISED -	
	DRAWN - EM	REVISED -	
PLOT SCALE = 100.0000 ' / in.	CHECKED - EG	REVISED -	
PLOT DATE = 4/3/2020	DATE -	REVISED -	

STATE OF ILLINOIS
DEPARTMENT OF TRANSPORTATION

I-80 FROM ROCK RUN CREEK TO LARKIN AVE.
JOLIET, ILLINOIS

SCALE: | SHEET 6 OF 15 SHEETS | STA. TO STA.

F.A. RTE.	SECTION	COUNTY	TOTAL SHEETS	SHEET NO.
		WILL	15	6
		CONTRACT NO. P-91-185-09		
		ILLINOIS	FED. AID PROJECT	

IDOT W.O. 212

exp.

USER NAME = SALASL	DESIGNED - CMA	REVISED -	
	DRAWN - CMA	REVISED -	
PLOT SCALE = 0.16666667 ' / IN.	CHECKED - BRH	REVISED -	
PLOT DATE = 11/12/2025	DATE - 11/12/2025	REVISED -	

STATE OF ILLINOIS
DEPARTMENT OF TRANSPORTATION

I-80
SUE UTILITIES

SCALE: NTS | SHEET OF SHEETS | STA. TO STA.

F.A.I. RTE.	SECTION	COUNTY	TOTAL SHEETS	SHEET NO.
80	FAI 80 21 VLS	VARIOUS	467	82
		CONTRACT NO. 62R19		
		ILLINOIS	FED. AID PROJECT	

MODEL: 2D SHEET H
FILE NAME: C:\TRANSYSTEMS\PW_LOCAL\TRANSYSTEMS-PW-01\DMS31451\62R19-SHT-SUE-33.DGN

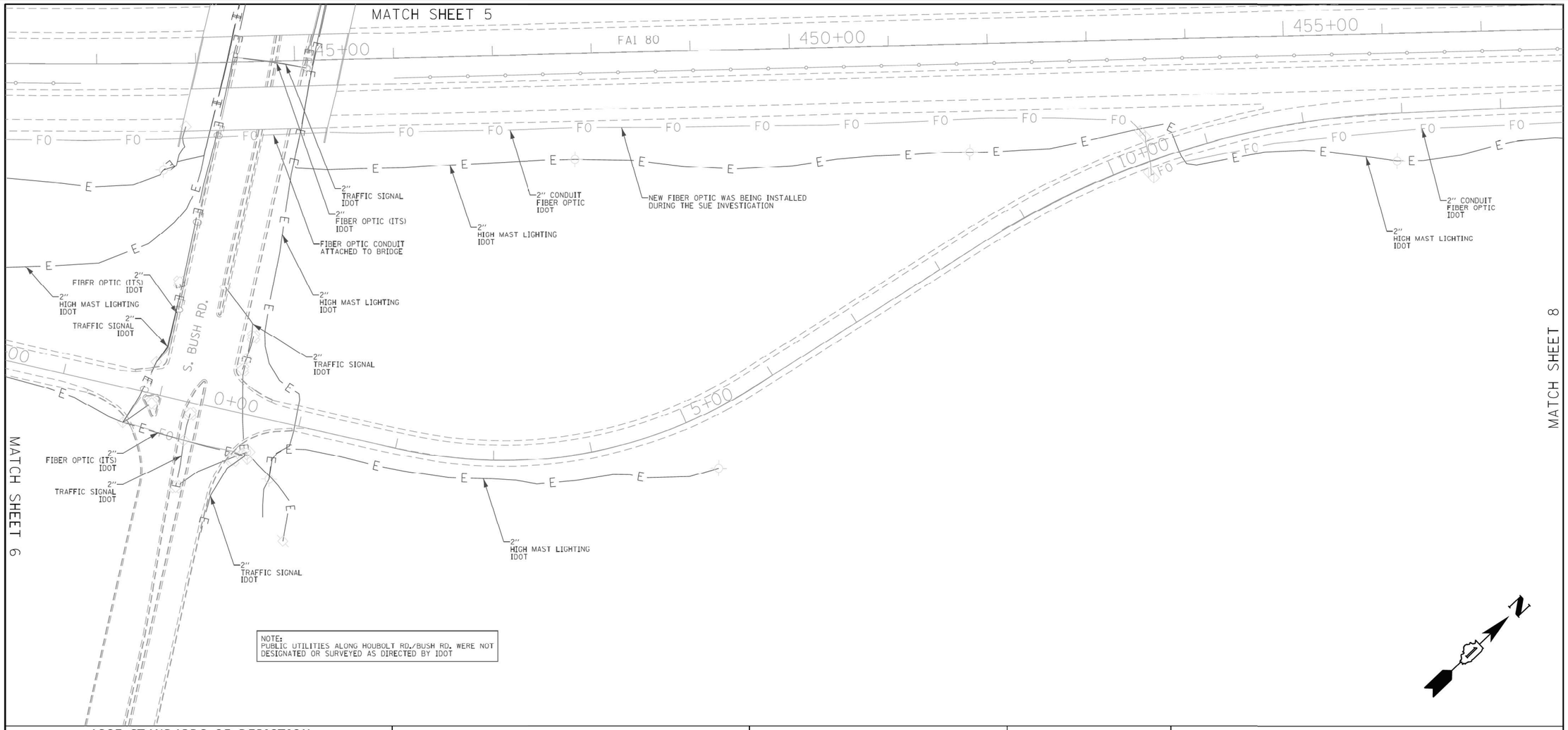

NOTE:
PUBLIC UTILITIES ALONG HOUBOLT RD./BUSH RD. WERE NOT DESIGNATED OR SURVEYED AS DIRECTED BY IDOT

ASCE STANDARDS OF DEPICTION OF SUBSURFACE UTILITIES

QUALITY LEVEL A (QLA)
PRECISE HORIZONTAL AND VERTICAL LOCATION OF UTILITIES OBTAINED BY THE ACTUAL EXPOSURE (OR VERIFICATION OF PREVIOUSLY EXPOSED AND SURVEYED UTILITIES) USING MINIMALLY INTRUSIVE EXCAVATION EQUIPMENT TO MINIMIZE POTENTIAL FOR UTILITY DAMAGE, AND SUBSEQUENT MEASURMENT OF THE SUBSURFACE UTILITIES WITH OTHER UTILITY ATTRIBUTES SUCH AS TYPE, SIZE & MATERIAL OF UTILITY.

QUALITY LEVEL B (QLB)
INFORMATION OBTAINED THROUGH THE APPLICATION OF APPROPRIATE SURFACE GEOPHYSICAL METHODS TO DETERMINE THE EXISTENCE AND APPROXIMATE HORIZONTAL POSITION OF SUBSURFACE UTILITIES. QUALITY LEVEL B DATA SHOULD BE REPRODUCIBLE BY SURFACE GEOPHYSICS AT ANY POINT OF THEIR DEPICTION. THIS INFORMATION IS SURVEYED TO APPLICABLE TOLERANCES DEFINED BY THE PROJECT AND REDUCED ONTO PLAN DOCUMENTS.

QUALITY LEVEL C (QLC)
INFORMATION OBTAINED BY SURVEYING AND PLOTTING VISIBLE ABOVE-GROUND UTILITY FEATURES AND BY USING PROFESSIONAL JUDGEMENT IN CORRELATING THIS INFORMATION TO QUALITY LEVEL D INFORMATION.

QUALITY LEVEL D (QLD)
INFORMATION DERIVED FROM EXISITNG RECORDS OR ORAL RECOLLECTIONS.

GENERAL NOTES:

WGI INC. HAS EXERCISED ITS BEST PROFESSIONAL EXPERTISE AND GEOPHYSICAL PROSPECTING TECHNIQUES TO DEVELOP THIS MAPPING OF SUBSURFACE UTILITIES WITHIN THE PROJECT LIMITS.

WGI INC. DOES NOT GUARANTEE THAT UTILITIES SHOWN COMPRISE ALL UTILITIES WITHIN THE PROJECT AREA.

WGI's FIELD INVESTIGATION WAS PERFORMED 11/19/19 THROUGH 01/03/20. CHANGES TO UTILITIES AFTER 01/03/20 MAY HAVE BEEN MADE AND THEREFORE MAY RESULT IN VARIANCES FROM THIS PLAN IF DEEMED ADVISABLE PRIOR TO FINAL DESIGN AND CONSTRUCTION.

FIELD LOCATED UTILITIES MEET THE FEDERAL HIGHWAY ADMINISTRATION DEFINITION FOR "QUALITY LEVEL B" (QLB) STANDARDS.

ALL UTILITIES SHOWN ARE QUALITY LEVEL B (QLB) UNLESS NOTED OTHERWISE.

ALL ELECTRONIC DEPTHS PROVIDED ARE APPROXIMATE AND SHOULD BE USED FOR INFORMATIONAL PURPOSES ONLY.

UTILITY LEGEND:

A	- AERIAL
	- UNKNOWN UTILITY
O	- OIL
CTV	- CABLE TV
T	- TELEPHONE
G	- GAS
E	- ELECTRIC
E	- TRAFFIC SIGNAL/LIGHTING
W	- WATER
	- FORCE MAIN
FO	- FIBER OPTIC
	- TEST HOLE
EOI	- END OF INFORMATION
ED	- ELECTRONIC DEPTH

JOHN J. BELLIS
062-044796
REGISTERED PROFESSIONAL ENGINEER OF ILLINOIS

signature

04/06/20
date

license expires 11/30/2021

AMERICAN SURVEYING & ENGINEERING
American Surveying & Engineering, P.C.
30 N. LaSalle St., Suite 3440
Chicago, IL 60602
Phone No. (312) 277-2000

WGI
2001 Butterfield Road, Suite 410
Downers Grove, IL 60515
Phone No. (630) 307-3800
Fax No. (630) 307-7030
Cert No. 6091 - LB No. 7055

USER NAME = Erick.Maleza	DESIGNED -	REVISED -	
	DRAWN - EM	REVISED -	
PLOT SCALE = 100.0000 ' / in.	CHECKED - EG	REVISED -	
PLOT DATE = 4/3/2020	DATE -	REVISED -	

STATE OF ILLINOIS
DEPARTMENT OF TRANSPORTATION

I-80 FROM ROCK RUN CREEK TO LARKIN AVE.
JOLIET, ILLINOIS

SCALE: | SHEET 7 OF 15 SHEETS | STA. TO STA.

F.A. RTE.	SECTION	COUNTY	TOTAL SHEETS	SHEET NO.
		WILL	15	7
		CONTRACT NO. P-91-185-09		
		ILLINOIS	FED. AID PROJECT	

IDOT W.O. 212

exp.

USER NAME = SALASL	DESIGNED - CMA	REVISED -	
	DRAWN - CMA	REVISED -	
PLOT SCALE = 0.16666667 ' / IN.	CHECKED - BRH	REVISED -	
PLOT DATE = 11/12/2025	DATE - 11/12/2025	REVISED -	

STATE OF ILLINOIS
DEPARTMENT OF TRANSPORTATION

I-80
SUE UTILITIES

SCALE: NTS | SHEET OF SHEETS | STA. TO STA.

F.A.I. RTE.	SECTION	COUNTY	TOTAL SHEETS	SHEET NO.
80	FAI 80 21 VLS	VARIOUS	467	83
		CONTRACT NO. 62R19		
		ILLINOIS	FED. AID PROJECT	

MODEL: 2D SHEET H
FILE NAME: C:\TRANSYSTEMS\PW_LOCAL\TRANSYSTEMS-PW-01\DMS31451\62R19-SHT-SUE-3A.DGN

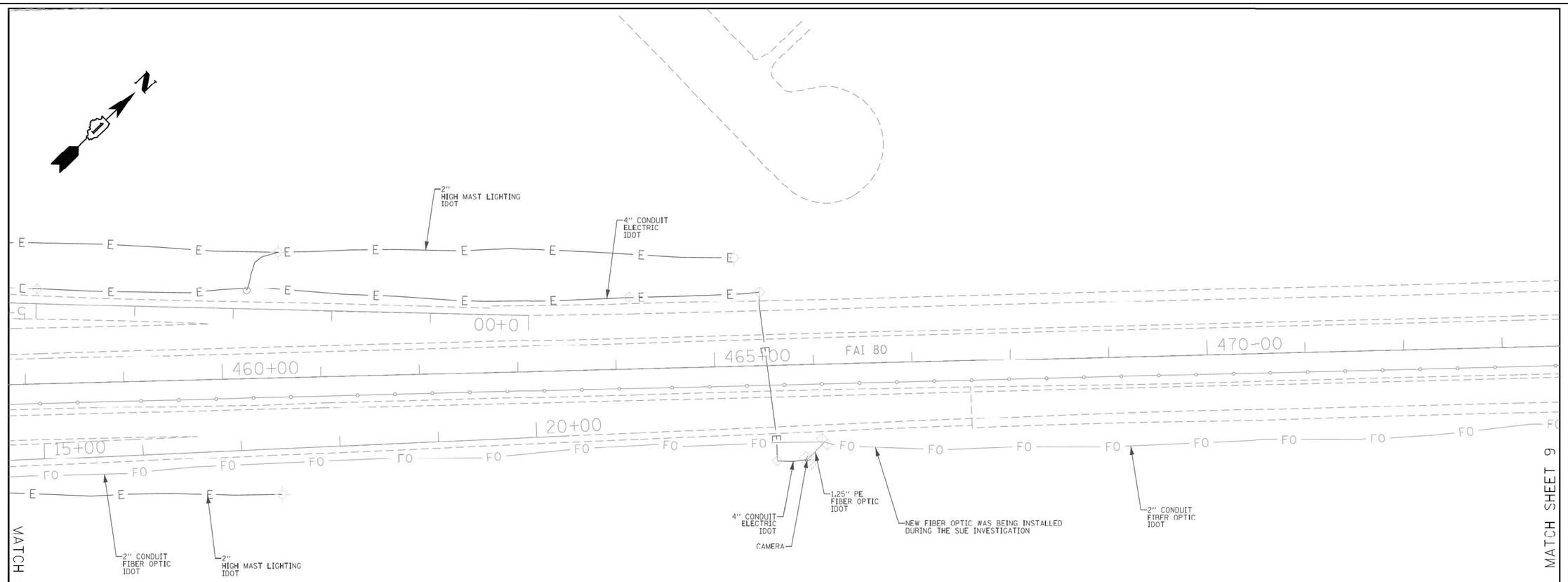

ASCE STANDARDS OF DEPICTION OF SUBSURFACE UTILITIES

QUALITY LEVEL A (QLA)
PRECISE HORIZONTAL AND VERTICAL LOCATION OF UTILITIES OBTAINED BY THE ACTUAL EXPOSURE (OR VERIFICATION OF PREVIOUSLY EXPOSED AND SURVEYED UTILITIES) USING MINIMALLY INTRUSIVE EXCAVATION EQUIPMENT TO MINIMIZE POTENTIAL FOR UTILITY DAMAGE, AND SUBSEQUENT MEASURMENT OF THE SUBSURFACE UTILITIES WITH OTHER UTILITY ATTRIBUTES SUCH AS TYPE, SIZE & MATERIAL OF UTILITY.

QUALITY LEVEL B (QLB)
INFORMATION OBTAINED THROUGH THE APPLICATION OF APPROPRIATE SURFACE GEOPHYSICAL METHODS TO DETERMINE THE EXISTENCE AND APPROXIMATE HORIZONTAL POSITION OF SUBSURFACE UTILITIES. QUALITY LEVEL B DATA SHOULD BE REPRODUCIBLE BY SURFACE GEOPHYSICS AT ANY POINT OF THEIR DEPICTION. THIS INFORMATION IS SURVEYED TO APPLICABLE TOLERANCES DEFINED BY THE PROJECT AND REDUCED ONTO PLAN DOCUMENTS.

QUALITY LEVEL C (QLC)
INFORMATION OBTAINED BY SURVEYING AND PLOTTING VISIBLE ABOVE-GROUND UTLITY FEATURES AND BY USING PROFESSIONAL JUDGEMENT IN CORRELATING THIS INFORMATION TO QUALITY LEVEL D INFORMATION.

QUALITY LEVEL D (QLD)
INFORMATION DERIVED FROM EXISITNG RECORDS OR ORAL RECOLLECTIONS.

GENERAL NOTES:

WGI INC. HAS EXERCISED ITS BEST PROFESSIONAL EXPERTISE AND GEOPHYSICAL PROSPECTING TECHNIQUES TO DEVELOP THIS MAPPING OF SUBSURFACE UTILITIES WITHIN THE PROJECT LIMITS.

WGI INC. DOES NOT GUARANTEE THAT UTILITIES SHOWN COMPRISE ALL UTILITIES WITHIN THE PROJECT AREA.

WGI's FIELD INVESTIGATION WAS PERFORMED 11/19/19 THROUGH 01/03/20. CHANGES TO UTILITIES AFTER 01/03/20 MAY HAVE BEEN MADE AND THEREFORE MAY RESULT IN VARIANCES FROM THIS PLAN IF DEEMED ADVISABLE PRIOR TO FINAL DESIGN AND CONSTRUCTION.

FIELD LOCATED UTILITIES MEET THE FEDERAL HIGHWAY ADMINISTRATION DEFINITION FOR "QUALITY LEVEL B" (QLB) STANDARDS.

ALL UTILITIES SHOWN ARE QUALITY LEVEL B (QLB) UNLESS NOTED OTHERWISE.

ALL ELECTRONIC DEPTHS PROVIDED ARE APPROXIMATE AND SHOULD BE USED FOR INFORMATIONAL PURPOSES ONLY.

UTILITY LEGEND:

- A — AERIAL
- UNKNOWN UTILITY
- O — OIL
- CTV — CABLE TV
- T — TELEPHONE
- G — GAS
- E — ELECTRIC
- E — TRAFFIC SIGNAL/LIGHTING
- W — WATER
- FORCE MAIN
- FO — FIBER OPTIC
- TEST HOLE
- EOI — END OF INFORMATION
- ED — ELECTRONIC DEPTH

JOHN J. BELLIS
062-044796
REGISTERED PROFESSIONAL ENGINEER OF ILLINOIS

John J Bellis
signature

04/06/20
date

license expires 11/30/2021

AMERICAN SURVEYING & ENGINEERING
American Surveying & Engineering, P.C.
30 N. LaSalle St., Suite 3440
Chicago, IL 60602
Phone No. (312) 277-2000

WGI
2001 Butterfield Road, Suite 410
Downers Grove, IL 60515
Phone No. (630) 307-3800
Fax No. (630) 307-7030
Cert No. 6091 - LB No. 7055

USER NAME = Erick.Maleza	DESIGNED -	REVISED -	
	DRAWN - EM	REVISED -	
PLOT SCALE = 100.0000 ' / in.	CHECKED - EG	REVISED -	
PLOT DATE = 4/2/2020	DATE -	REVISED -	

STATE OF ILLINOIS
DEPARTMENT OF TRANSPORTATION

I-80 FROM ROCK RUN CREEK TO LARKIN AVE.
JOLIET, ILLINOIS

SCALE: | SHEET 8 OF 15 SHEETS | STA. TO STA.

F.A. RTE.	SECTION	COUNTY	TOTAL SHEETS	SHEET NO.
		WILL	15	8
		CONTRACT NO. P-91-185-09		
		ILLINOIS	FED. AID PROJECT	

IDOT W.O. 212

exp.

USER NAME = SALASL	DESIGNED - CMA	REVISED -	
	DRAWN - CMA	REVISED -	
PLOT SCALE = 0.16666667 ' / IN.	CHECKED - BRH	REVISED -	
PLOT DATE = 11/12/2025	DATE - 11/12/2025	REVISED -	

STATE OF ILLINOIS
DEPARTMENT OF TRANSPORTATION

I-80
SUE UTILITIES

SCALE: NTS | SHEET OF SHEETS | STA. TO STA.

F.A.I. RTE.	SECTION	COUNTY	TOTAL SHEETS	SHEET NO.
80	FAI 80 21 VLS	VARIOUS	467	84
		CONTRACT NO. 62R19		
		ILLINOIS	FED. AID PROJECT	

MODEL: 2D SHEET H
FILE NAME: C:\TRANSYSTEMS\PW_LOCAL\TRANSYSTEMS-PW-01\DMS31451\62R19-SHT-SUE-35.DGN

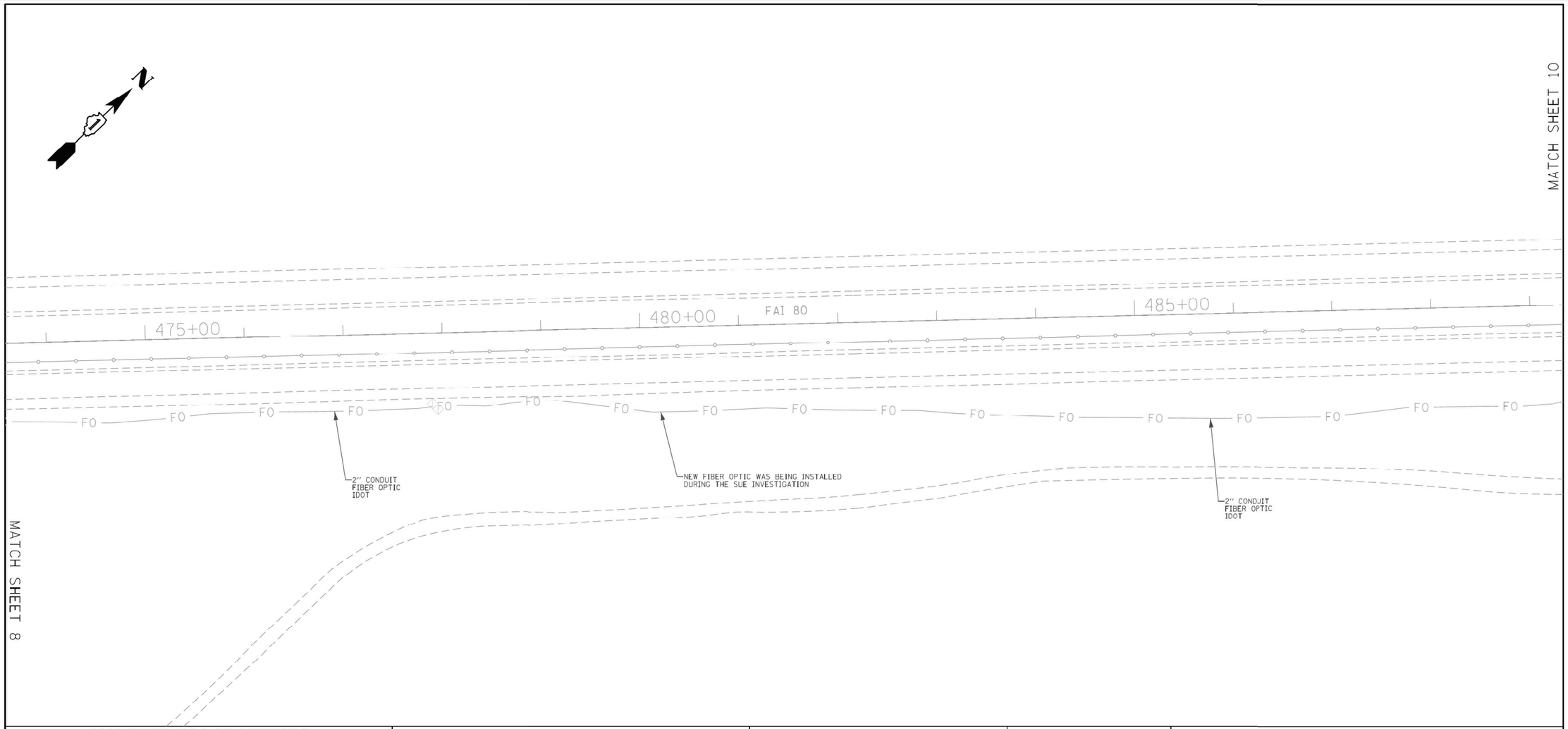

ASCE STANDARDS OF DEPICTION OF SUBSURFACE UTILITIES

QUALITY LEVEL A (QLA)
PRECISE HORIZONTAL AND VERTICAL LOCATION OF UTILITIES OBTAINED BY THE ACTUAL EXPOSURE (OR VERIFICATION OF PREVIOUSLY EXPOSED AND SURVEYED UTILITIES) USING MINIMALLY INTRUSIVE EXCAVATION EQUIPMENT TO MINIMIZE POTENTIAL FOR UTILITY DAMAGE, AND SUBSEQUENT MEASURMENT OF THE SUBSURFACE UTILITIES WITH OTHER UTILITY ATTRIBUTES SUCH AS TYPE, SIZE & MATERIAL OF UTILITY.

QUALITY LEVEL B (QLB)
INFORMATION OBTAINED THROUGH THE APPLICATION OF APPROPRIATE SURFACE GEOPHYSICAL METHODS TO DETERMINE THE EXISTENCE AND APPROXIMATE HORIZONTAL POSITION OF SUBSURFACE UTILITIES. QUALITY LEVEL B DATA SHOULD BE REPRODUCIBLE BY SURFACE GEOPHYSICS AT ANY POINT OF THEIR DEPICTION. THIS INFORMATION IS SURVEYED TO APPLICABLE TOLERANCES DEFINED BY THE PROJECT AND REDUCED ONTO PLAN DOCUMENTS.

QUALITY LEVEL C (QLC)
INFORMATION OBTAINED BY SURVEYING AND PLOTTING VISIBLE ABOVE-GROUND UTLITY FEATURES AND BY USING PROFESSIONAL JUDGEMENT IN CORRELATING THIS INFORMATION TO QUALITY LEVEL D INFORMATION.

QUALITY LEVEL D (OLD)
INFORMATION DERIVED FROM EXISITNG RECORDS OR ORAL RECOLLECTIONS.

GENERAL NOTES:

WGI INC. HAS EXERCISED ITS BEST PROFESSIONAL EXPERTISE AND GEOPHYSICAL PROSPECTING TECHNIQUES TO DEVELOP THIS MAPPING OF SUBSURFACE UTILITIES WITHIN THE PROJECT LIMITS.

WGI INC. DOES NOT GUARANTEE THAT UTILITIES SHOWN COMPRISE ALL UTILITIES WITHIN THE PROJECT AREA.

WGI's FIELD INVESTIGATION WAS PERFORMED 11/19/19 THROUGH 01/03/20. CHANGES TO UTILITIES AFTER 01/03/20 MAY HAVE BEEN MADE AND THEREFORE MAY RESULT IN VARIANCES FROM THIS PLAN IF DEEMED ADVISABLE PRIOR TO FINAL DESIGN AND CONSTRUCTION.

FIELD LOCATED UTILITIES MEET THE FEDERAL HIGHWAY ADMINISTRATION DEFINITION FOR "QUALITY LEVEL B" (QLB) STANDARDS.

ALL UTILITIES SHOWN ARE QUALITY LEVEL B (QLB) UNLESS NOTED OTHERWISE.

ALL ELECTRONIC DEPTHS PROVIDED ARE APPROXIMATE AND SHOULD BE USED FOR INFORMATIONAL PURPOSES ONLY.

UTILITY LEGEND:

- A — AERIAL
- UNKNOWN UTILITY
- O — OIL
- CTV — CABLE TV
- T — TELEPHONE
- G — GAS
- E — ELECTRIC
- E — TRAFFIC SIGNAL/LIGHTING
- W — WATER
- FORCE MAIN
- FO — FIBER OPTIC
- TEST HOLE
- EOI — END OF INFORMATION
- ED — ELECTRONIC DEPTH

JOHN J. BELLIS
062-044796
REGISTERED PROFESSIONAL ENGINEER OF ILLINOIS

John J Bellis
signature

04/06/20
date

license expires 11/30/2021

AMERICAN SURVEYING & ENGINEERING
American Surveying & Engineering, P.C.
30 N. LaSalle St., Suite 3440
Chicago, IL 60602
Phone No. (312) 277-2000

WGI
2001 Butterfield Road, Suite 410
Downers Grove, IL 60515
Phone No. (630) 307-3800
Fax No. (630) 307-7030
Cert No. 6091 - LB No. 7055

USER NAME = Erick.Maleza	DESIGNED -	REVISED -	
	DRAWN - EM	REVISED -	
PLOT SCALE = 100.0000 ' / in.	CHECKED - EG	REVISED -	
PLOT DATE = 4/2/2020	DATE -	REVISED -	

STATE OF ILLINOIS
DEPARTMENT OF TRANSPORTATION

I-80 FROM ROCK RUN CREEK TO LARKIN AVE.
JOLIET, ILLINOIS

SCALE: | SHEET 9 OF 15 SHEETS | STA. TO STA.

F.A. RTE.	SECTION	COUNTY	TOTAL SHEETS	SHEET NO.
		WILL	15	9
		CONTRACT NO. P-91-185-09		
		ILLINOIS	FED. AID PROJECT	

IDOT W.O. 212

exp.

USER NAME = SALASL	DESIGNED - CMA	REVISED -	
	DRAWN - CMA	REVISED -	
PLOT SCALE = 0.16666667 ' / IN.	CHECKED - BRH	REVISED -	
PLOT DATE = 11/12/2025	DATE - 11/12/2025	REVISED -	

STATE OF ILLINOIS
DEPARTMENT OF TRANSPORTATION

I-80
SUE UTILITIES

SCALE: NTS | SHEET OF SHEETS | STA. TO STA.

F.A.I. RTE.	SECTION	COUNTY	TOTAL SHEETS	SHEET NO.
80	FAI 80 21 VLS	VARIOUS	467	85
		CONTRACT NO. 62R19		
		ILLINOIS	FED. AID PROJECT	

MODEL: 2D SHEET H
FILE NAME: C:\TRANSYSTEMS\PW_LOCAL\TRANSYSTEMS-PW-01\DMS31451\62R19-SHT-SUE-36.DGN

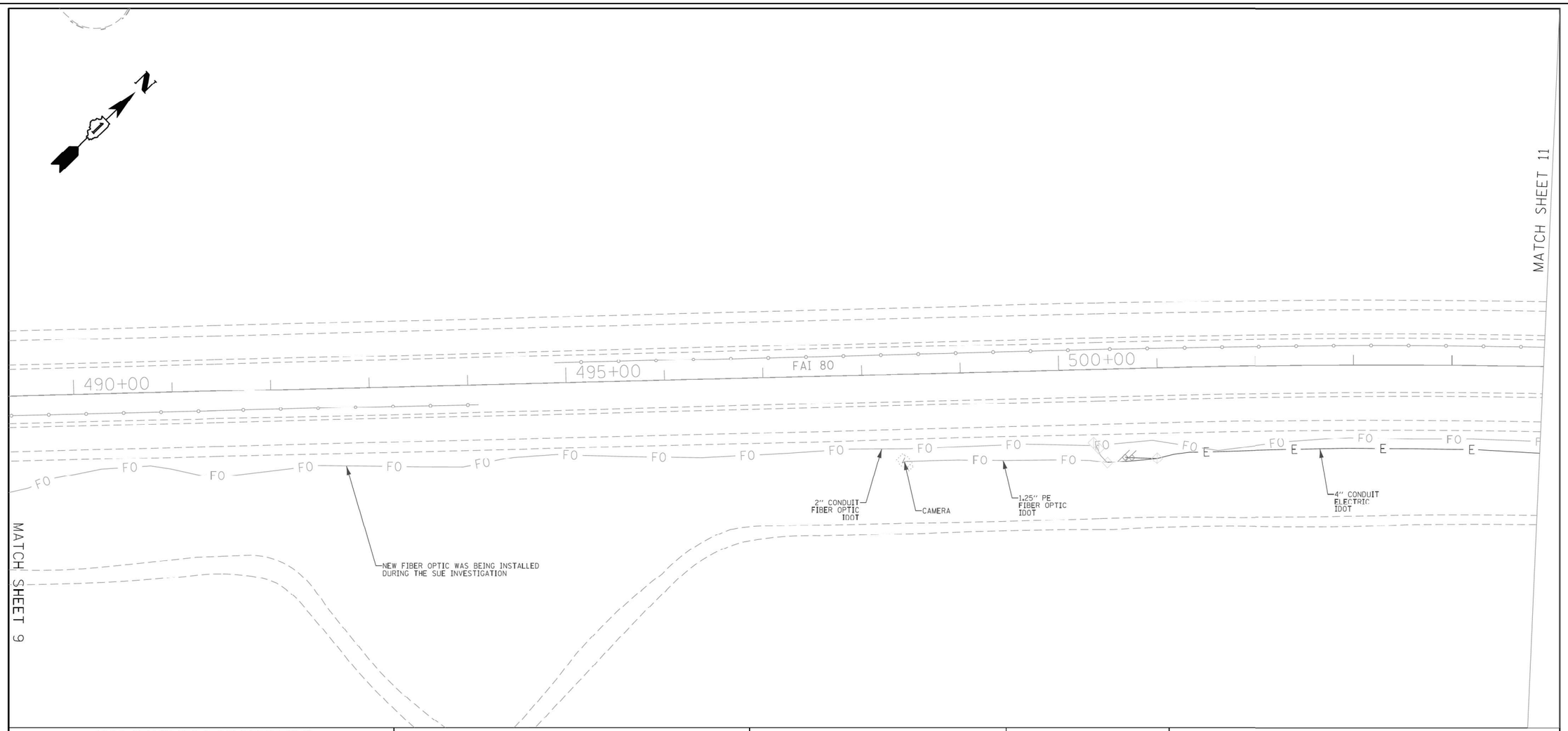

ASCE STANDARDS OF DEPICTION OF SUBSURFACE UTILITIES

QUALITY LEVEL A (QLA)
PRECISE HORIZONTAL AND VERTICAL LOCATION OF UTILITIES OBTAINED BY THE ACTUAL EXPOSURE (OR VERIFICATION OF PREVIOUSLY EXPOSED AND SURVEYED UTILITIES) USING MINIMALLY INTRUSIVE EXCAVATION EQUIPMENT TO MINIMIZE POTENTIAL FOR UTILITY DAMAGE, AND SUBSEQUENT MEASURMENT OF THE SUBSURFACE UTILITIES WITH OTHER UTILITY ATTRIBUTES SUCH AS TYPE, SIZE & MATERIAL OF UTILITY.

QUALITY LEVEL B (QLB)
INFORMATION OBTAINED THROUGH THE APPLICATION OF APPROPRIATE SURFACE GEOPHYSICAL METHODS TO DETERMINE THE EXISTENCE AND APPROXIMATE HORIZONTAL POSITION OF SUBSURFACE UTILITIES. QUALITY LEVEL B DATA SHOULD BE REPRODUCIBLE BY SURFACE GEOPHYSICS AT ANY POINT OF THEIR DEPICTION. THIS INFORMATION IS SURVEYED TO APPLICABLE TOLERANCES DEFINED BY THE PROJECT AND REDUCED ONTO PLAN DOCUMENTS.

QUALITY LEVEL C (QLC)
INFORMATION OBTAINED BY SURVEYING AND PLOTTING VISIBLE ABOVE-GROUND UTLITY FEATURES AND BY USING PROFESSIONAL JUDGEMENT IN CORRELATING THIS INFORMATION TO QUALITY LEVEL D INFORMATION.

QUALITY LEVEL D (OLD)
INFORMATION DERIVED FROM EXISITNG RECORDS OR ORAL RECOLLECTIONS.

GENERAL NOTES:

WGI INC. HAS EXERCISED ITS BEST PROFESSIONAL EXPERTISE AND GEOPHYSICAL PROSPECTING TECHNIQUES TO DEVELOP THIS MAPPING OF SUBSURFACE UTILITIES WITHIN THE PROJECT LIMITS.

WGI INC. DOES NOT GUARANTEE THAT UTILITIES SHOWN COMPRISE ALL UTILITIES WITHIN THE PROJECT AREA.

WGI's FIELD INVESTIGATION WAS PERFORMED 11/19/19 THROUGH 01/03/20. CHANGES TO UTILITIES AFTER 01/03/20 MAY HAVE BEEN MADE AND THEREFORE MAY RESULT IN VARIANCES FROM THIS PLAN IF DEEMED ADVISABLE PRIOR TO FINAL DESIGN AND CONSTRUCTION.

FIELD LOCATED UTILITIES MEET THE FEDERAL HIGHWAY ADMINISTRATION DEFINITION FOR "QUALITY LEVEL B" (QLB) STANDARDS.

ALL UTILITIES SHOWN ARE QUALITY LEVEL B (QLB) UNLESS NOTED OTHERWISE.

ALL ELECTRONIC DEPTHS PROVIDED ARE APPROXIMATE AND SHOULD BE USED FOR INFORMATIONAL PURPOSES ONLY.

UTILITY LEGEND:

- A — AERIAL
- UNKNOWN UTILITY
- O — OIL
- CTV — CABLE TV
- T — TELEPHONE
- G — GAS
- E — ELECTRIC
- E — TRAFFIC SIGNAL/LIGHTING
- W — WATER
- FORCE MAIN
- FO — FIBER OPTIC
- TEST HOLE
- EOI — END OF INFORMATION
- ED — ELECTRONIC DEPTH

JOHN J. BELLIS
062-044796
REGISTERED PROFESSIONAL ENGINEER OF ILLINOIS

John J Bellis
signature

04/06/20
date

license expires 11/30/2021

AMERICAN SURVEYING & ENGINEERING
American Surveying & Engineering, P.C.
30 N. LaSalle St., Suite 3440
Chicago, IL 60602
Phone No. (312) 277-2000

WGI
2001 Butterfield Road, Suite 410
Downers Grove, IL 60515
Phone No. (630) 307-3800
Fax No. (630) 307-7030
Cert No. 6091 - LB No. 7055

USER NAME = Erick.Maleza	DESIGNED -	REVISED -	
	DRAWN - EM	REVISED -	
PLOT SCALE = 100.0000 ' / in.	CHECKED - EG	REVISED -	
PLOT DATE = 4/2/2020	DATE -	REVISED -	

STATE OF ILLINOIS
DEPARTMENT OF TRANSPORTATION

I-80 FROM ROCK RUN CREEK TO LARKIN AVE.
JOLIET, ILLINOIS

SCALE: | SHEET 10 OF 15 SHEETS | STA. | TO STA.

F.A. RTE.	SECTION	COUNTY	TOTAL SHEETS	SHEET NO.
		WILL	15	10
		CONTRACT NO. P-91-185-09		
		ILLINOIS	FED. AID PROJECT	

IDOT W.O. 212

exp.

USER NAME = SALASL	DESIGNED - CMA	REVISED -	
	DRAWN - CMA	REVISED -	
PLOT SCALE = 0.16666667 ' / IN.	CHECKED - BRH	REVISED -	
PLOT DATE = 11/12/2025	DATE - 11/12/2025	REVISED -	

STATE OF ILLINOIS
DEPARTMENT OF TRANSPORTATION

I-80
SUE UTILITIES

SCALE: NTS | SHEET OF SHEETS | STA. | TO STA.

F.A.I. RTE.	SECTION	COUNTY	TOTAL SHEETS	SHEET NO.
80	FAI 80 21 VLS	VARIOUS	467	86
		CONTRACT NO. 62R19		
		ILLINOIS	FED. AID PROJECT	

MODEL: 2D SHEET H
FILE NAME: C:\TRANSYSTEMS\PW_LOCAL\TRANSYSTEMS-PW-01\DMS31451\62R19-SHT-SUE-37.DGN

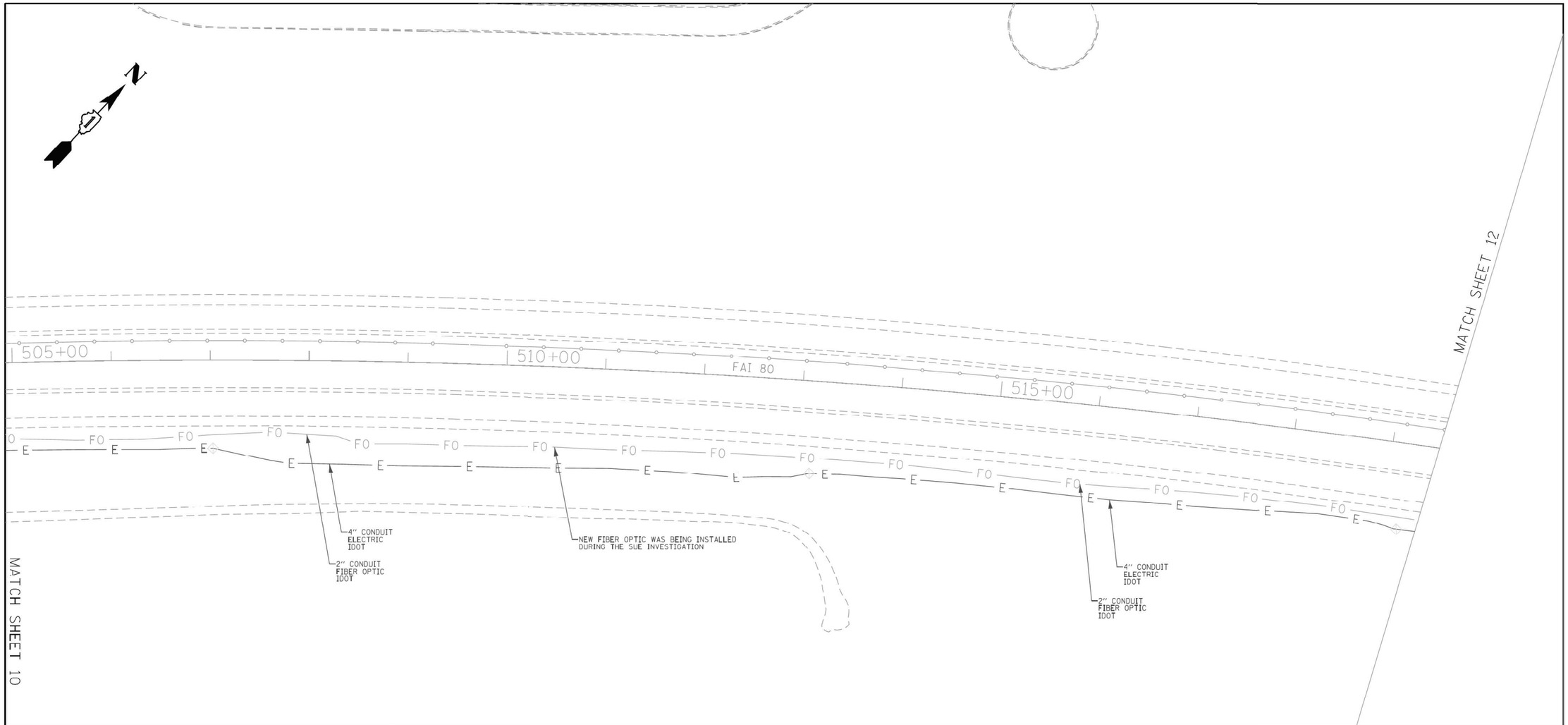

ASCE STANDARDS OF DEPICTION OF SUBSURFACE UTILITIES

QUALITY LEVEL A (QLA)
PRECISE HORIZONTAL AND VERTICAL LOCATION OF UTILITIES OBTAINED BY THE ACTUAL EXPOSURE (OR VERIFICATION OF PREVIOUSLY EXPOSED AND SURVEYED UTILITIES) USING MINIMALLY INTRUSIVE EXCAVATION EQUIPMENT TO MINIMIZE POTENTIAL FOR UTILITY DAMAGE, AND SUBSEQUENT MEASURMENT OF THE SUBSURFACE UTILITIES WITH OTHER UTILITY ATTRIBUTES SUCH AS TYPE, SIZE & MATERIAL OF UTILITY.

QUALITY LEVEL B (QLB)
INFORMATION OBTAINED THROUGH THE APPLICATION OF APPROPRIATE SURFACE GEOPHYSICAL METHODS TO DETERMINE THE EXISTENCE AND APPROXIMATE HORIZONTAL POSITION OF SUBSURFACE UTILITIES. QUALITY LEVEL B DATA SHOULD BE REPRODUCIBLE BY SURFACE GEOPHYSICS AT ANY POINT OF THEIR DEPICTION. THIS INFORMATION IS SURVEYED TO APPLICABLE TOLERANCES DEFINED BY THE PROJECT AND REDUCED ONTO PLAN DOCUMENTS.

QUALITY LEVEL C (QLC)
INFORMATION OBTAINED BY SURVEYING AND PLOTTING VISIBLE ABOVE-GROUND UTLITY FEATURES AND BY USING PROFESSIONAL JUDGEMENT IN CORRELATING THIS INFORMATION TO QUALITY LEVEL D INFORMATION.

QUALITY LEVEL D (QLD)
INFORMATION DERIVED FROM EXISITNG RECORDS OR ORAL RECOLLECTIONS.

GENERAL NOTES:

WGI INC. HAS EXERCISED ITS BEST PROFESSIONAL EXPERTISE AND GEOPHYSICAL PROSPECTING TECHNIQUES TO DEVELOP THIS MAPPING OF SUBSURFACE UTILITIES WITHIN THE PROJECT LIMITS.

WGI INC. DOES NOT GUARANTEE THAT UTILITIES SHOWN COMPRISE ALL UTILITIES WITHIN THE PROJECT AREA.

WGI's FIELD INVESTIGATION WAS PERFORMED 11/19/19 THROUGH 01/03/20. CHANGES TO UTILITIES AFTER 01/03/20 MAY HAVE BEEN MADE AND THEREFORE MAY RESULT IN VARIANCES FROM THIS PLAN IF DEEMED ADVISABLE PRIOR TO FINAL DESIGN AND CONSTRUCTION.

FIELD LOCATED UTILITIES MEET THE FEDERAL HIGHWAY ADMINISTRATION DEFINITION FOR "QUALITY LEVEL B" (QLB) STANDARDS.

ALL UTILITIES SHOWN ARE QUALITY LEVEL B (QLB) UNLESS NOTED OTHERWISE.

ALL ELECTRONIC DEPTHS PROVIDED ARE APPROXIMATE AND SHOULD BE USED FOR INFORMATIONAL PURPOSES ONLY.

UTILITY LEGEND:

- A — *AERIAL*
- *UNKNOWN UTILITY*
- O — *OIL*
- CTV — *CABLE TV*
- T — *TELEPHONE*
- G — *GAS*
- E — *ELECTRIC*
- E — *TRAFFIC SIGNAL/LIGHTING*
- W — *WATER*
- *FORCE MAIN*
- FO — *FIBER OPTIC*
- *TEST HOLE*
- EOI — *END OF INFORMATION*
- ED — *ELECTRONIC DEPTH*

JOHN J. BELLIS
062-044796
REGISTERED PROFESSIONAL ENGINEER OF ILLINOIS

John J Bellis
signature

04/06/20
date

license expires 11/30/2021

AMERICAN SURVEYING & ENGINEERING
American Surveying & Engineering, P.C.
30 N. LaSalle St., Suite 3440
Chicago, IL 60602
Phone No. (312) 277-2000

WGI™
2001 Butterfield Road, Suite 410
Downers Grove, IL 60515
Phone No. (630) 307-3800
Fax No. (630) 307-7030
Cert No. 6091 - LB No. 7055

USER NAME = Erick.Maleza	DESIGNED -	REVISED -	
	DRAWN - EM	REVISED -	
PLOT SCALE = 100.0000 ' / in.	CHECKED - EG	REVISED -	
PLOT DATE = 4/2/2020	DATE -	REVISED -	

STATE OF ILLINOIS
DEPARTMENT OF TRANSPORTATION

I-80 FROM ROCK RUN CREEK TO LARKIN AVE.
JOLIET, ILLINOIS

SCALE: | SHEET 11 OF 15 SHEETS | STA. TO STA.

F.A. RTE.	SECTION	COUNTY	TOTAL SHEETS	SHEET NO.
		WILL	15	11
		CONTRACT NO. P-91-185-09		
		ILLINOIS	FED. AID PROJECT	

IDOT W.O. 212

exp.

USER NAME = SALASL	DESIGNED - CMA	REVISED -	
	DRAWN - CMA	REVISED -	
PLOT SCALE = 0.16666667 ' / IN.	CHECKED - BRH	REVISED -	
PLOT DATE = 11/12/2025	DATE - 11/12/2025	REVISED -	

STATE OF ILLINOIS
DEPARTMENT OF TRANSPORTATION

I-80
SUE UTILITIES

SCALE: NTS | SHEET OF SHEETS | STA. TO STA.

F.A.I. RTE.	SECTION	COUNTY	TOTAL SHEETS	SHEET NO.
80	FAI 80 21 VLS	VARIOUS	467	87
		CONTRACT NO. 62R19		
		ILLINOIS	FED. AID PROJECT	

MODEL: 2D SHEET H
FILE NAME: C:\TRANSYSTEMS\PW_LOCAL\TRANSYSTEMS-PW@010MS31451\62R19-SHT-SUE-38.DGN

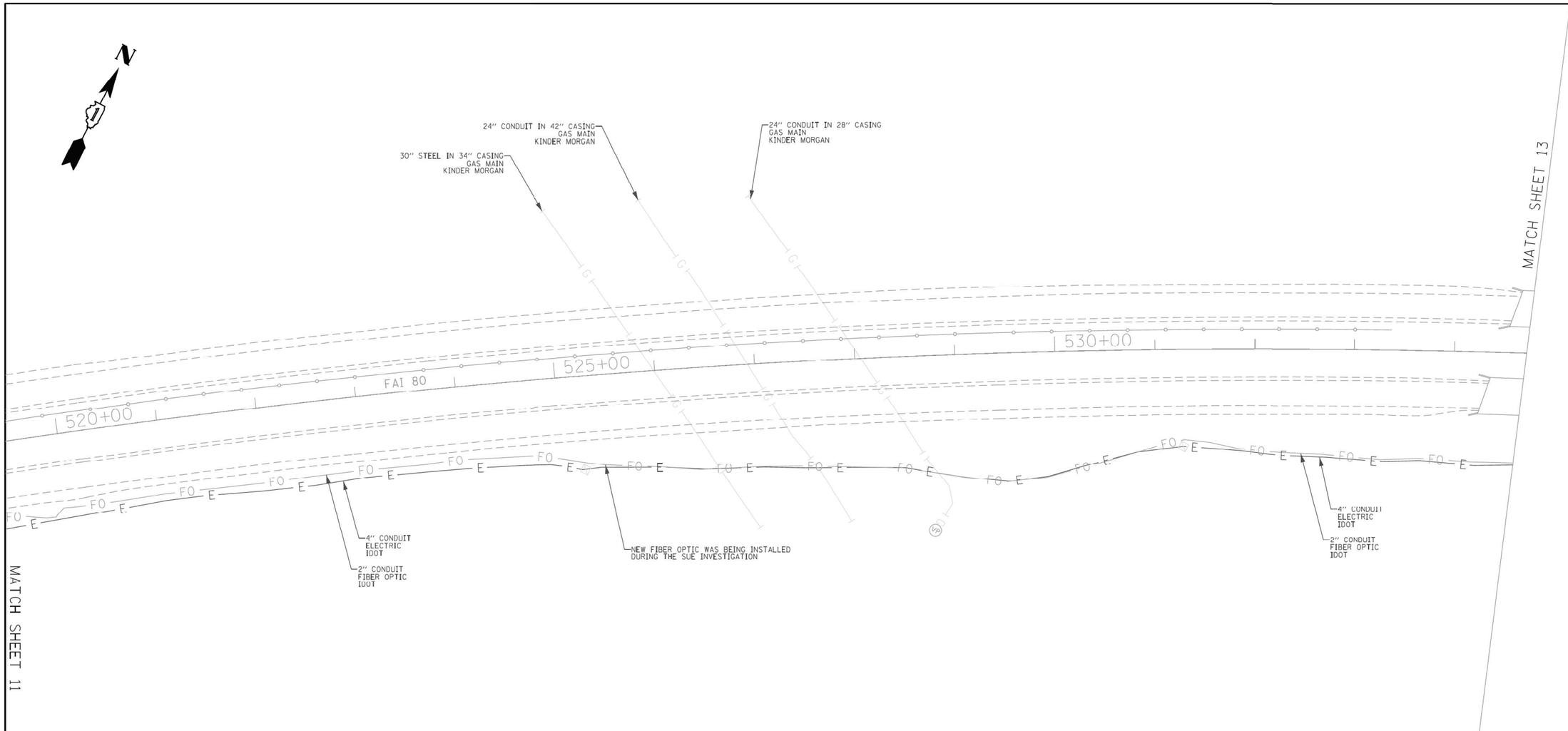

ASCE STANDARDS OF DEPICTION OF SUBSURFACE UTILITIES

QUALITY LEVEL A (QLA)
PRECISE HORIZONTAL AND VERTICAL LOCATION OF UTILITIES OBTAINED BY THE ACTUAL EXPOSURE (OR VERIFICATION OF PREVIOUSLY EXPOSED AND SURVEYED UTILITIES) USING MINIMALLY INTRUSIVE EXCAVATION EQUIPMENT TO MINIMIZE POTENTIAL FOR UTILITY DAMAGE, AND SUBSEQUENT MEASURMENT OF THE SUBSURFACE UTILITIES WITH OTHER UTILITY ATTRIBUTES SUCH AS TYPE, SIZE & MATERIAL OF UTILITY.

QUALITY LEVEL B (QLB)
INFORMATION OBTAINED THROUGH THE APPLICATION OF APPROPRIATE SURFACE GEOPHYSICAL METHODS TO DETERMINE THE EXISTENCE AND APPROXIMATE HORIZONTAL POSITION OF SUBSURFACE UTILITIES.
QUALITY LEVEL B DATA SHOULD BE REPRODUCIBLE BY SURFACE GEOPHYSICS AT ANY POINT OF THEIR DEPICTION. THIS INFORMATION IS SURVEYED TO APPLICABLE TOLERANCES DEFINED BY THE PROJECT AND REDUCED ONTO PLAN DOCUMENTS.

QUALITY LEVEL C (QLC)
INFORMATION OBTAINED BY SURVEYING AND PLOTTING VISIBLE ABOVE-GROUND UTLITY FEATURES AND BY USING PROFESSIONAL JUDGEMENT IN CORRELATING THIS INFORMATION TO QUALITY LEVEL D INFORMATION.

QUALITY LEVEL D (QLD)
INFORMATION DERIVED FROM EXISITNG RECORDS OR ORAL RECOLLECTIONS.

GENERAL NOTES:

WGI INC. HAS EXERCISED ITS BEST PROFESSIONAL EXPERTISE AND GEOPHYSICAL PROSPECTING TECHNIQUES TO DEVELOP THIS MAPPING OF SUBSURFACE UTILITIES WITHIN THE PROJECT LIMITS.

WGI INC. DOES NOT GUARANTEE THAT UTILITIES SHOWN COMPRISE ALL UTILITIES WITHIN THE PROJECT AREA.

WGI's FIELD INVESTIGATION WAS PERFORMED 11/19/19 THROUGH 01/03/20. CHANGES TO UTILITIES AFTER 01/03/20 MAY HAVE BEEN MADE AND THEREFORE MAY RESULT IN VARIANCES FROM THIS PLAN IF DEEMED ADVISABLE PRIOR TO FINAL DESIGN AND CONSTRUCTION.

FIELD LOCATED UTILITIES MEET THE FEDERAL HIGHWAY ADMINISTRATION DEFINITION FOR "QUALITY LEVEL B" (QLB) STANDARDS.

ALL UTILITIES SHOWN ARE QUALITY LEVEL B (QLB) UNLESS NOTED OTHERWISE.

ALL ELECTRONIC DEPTHS PROVIDED ARE APPROXIMATE AND SHOULD BE USED FOR INFORMATIONAL PURPOSES ONLY.

UTILITY LEGEND:

- A - AERIAL
- UNKNOWN UTILITY
- O - OIL
- CTV - CABLE TV
- T - TELEPHONE
- G - GAS
- E - ELECTRIC
- E - TRAFFIC SIGNAL/LIGHTING
- W - WATER
- FORCE MAIN
- FO - FIBER OPTIC
- TEST HOLE
- EOI - END OF INFORMATION
- ED - ELECTRONIC DEPTH

JOHN J. BELLIS
062-044796
REGISTERED PROFESSIONAL ENGINEER OF ILLINOIS

signature
04/06/20
date
license expires 11/30/2021

AMERICAN SURVEYING & ENGINEERING
American Surveying & Engineering, P.C.
30 N. LaSalle St., Suite 3440
Chicago, IL 60602
Phone No. (312) 277-2000

WGI
2001 Butterfield Road, Suite 410
Downers Grove, IL 60515
Phone No. (630) 307-3800
Fax No. (630) 307-7030
Cert No. 6091 - LB No. 7055

USER NAME = Erick.Maleza	DESIGNED -	REVISED -	
	DRAWN - EM	REVISED -	
PLOT SCALE = 100.0000 ' / in.	CHECKED - EG	REVISED -	
PLOT DATE = 4/2/2020	DATE -	REVISED -	

STATE OF ILLINOIS
DEPARTMENT OF TRANSPORTATION

I-80 FROM ROCK RUN CREEK TO LARKIN AVE.
JOLIET, ILLINOIS

SCALE: | SHEET 12 OF 15 SHEETS | STA. | TO STA.

F.A. RTE.	SECTION	COUNTY	TOTAL SHEETS	SHEET NO.
		WILL	15	12
		CONTRACT NO. P-91-185-09		
	ILLINOIS	FED. AID PROJECT		

IDOT W.O. 212

exp.

USER NAME = SALASL	DESIGNED - CMA	REVISED -	
	DRAWN - CMA	REVISED -	
PLOT SCALE = 0.16666667 ' / IN.	CHECKED - BRH	REVISED -	
PLOT DATE = 11/12/2025	DATE - 11/12/2025	REVISED -	

STATE OF ILLINOIS
DEPARTMENT OF TRANSPORTATION

I-80
SUE UTILITIES

SCALE: NTS | SHEET OF SHEETS | STA. | TO STA.

F.A.I. RTE.	SECTION	COUNTY	TOTAL SHEETS	SHEET NO.
80	FAI 80 21 VLS	VARIOUS	467	88
		CONTRACT NO. 62R19		
	ILLINOIS	FED. AID PROJECT		

MODEL: 2D SHEET H
FILE NAME: C:\TRANSYSTEMS\PW_LOCAL\TRANSYSTEMS-PW-01\DMS31451\62R19-SHT-SUE-39.DGN

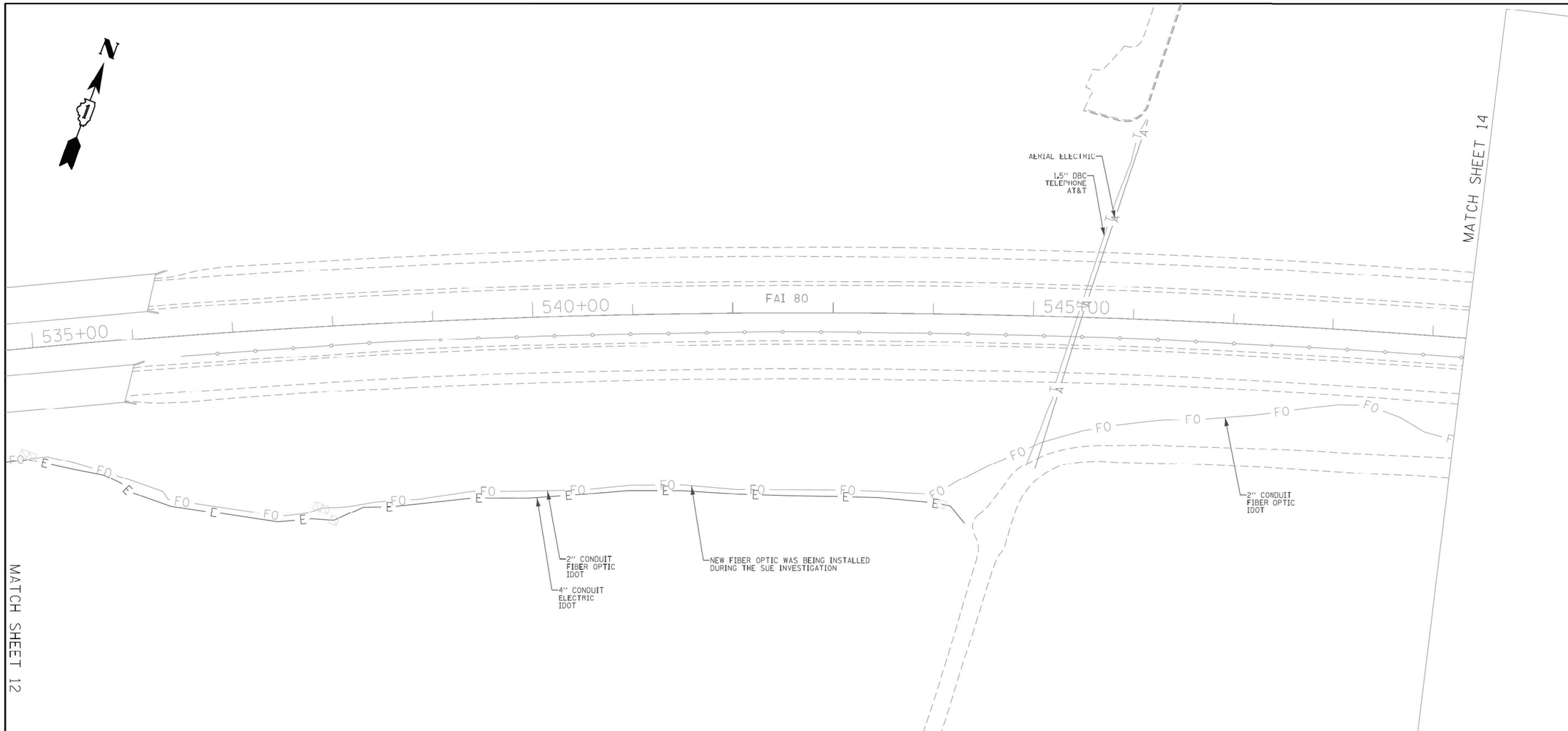

ASCE STANDARDS OF DEPICTION OF SUBSURFACE UTILITIES

QUALITY LEVEL A (QLA)
PRECISE HORIZONTAL AND VERTICAL LOCATION OF UTILITIES OBTAINED BY THE ACTUAL EXPOSURE (OR VERIFICATION OF PREVIOUSLY EXPOSED AND SURVEYED UTILITIES) USING MINIMALLY INTRUSIVE EXCAVATION EQUIPMENT TO MINIMIZE POTENTIAL FOR UTILITY DAMAGE, AND SUBSEQUENT MEASURMENT OF THE SUBSURFACE UTILITIES WITH OTHER UTILITY ATTRIBUTES SUCH AS TYPE, SIZE & MATERIAL OF UTILITY.

QUALITY LEVEL B (QLB)
INFORMATION OBTAINED THROUGH THE APPLICATION OF APPROPRIATE SURFACE GEOPHYSICAL METHODS TO DETERMINE THE EXISTENCE AND APPROXIMATE HORIZONTAL POSITION OF SUBSURFACE UTILITIES. QUALITY LEVEL B DATA SHOULD BE REPRODUCIBLE BY SURFACE GEOPHYSICS AT ANY POINT OF THEIR DEPICTION. THIS INFORMATION IS SURVEYED TO APPLICABLE TOLERANCES DEFINED BY THE PROJECT AND REDUCED ONTO PLAN DOCUMENTS.

QUALITY LEVEL C (QLC)
INFORMATION OBTAINED BY SURVEYING AND PLOTTING VISIBLE ABOVE-GROUND UTLITY FEATURES AND BY USING PROFESSIONAL JUDGEMENT IN CORRELATING THIS INFORMATION TO QUALITY LEVEL D INFORMATION.

QUALITY LEVEL D (QLD)
INFORMATION DERIVED FROM EXISITNG RECORDS OR ORAL RECOLLECTIONS.

GENERAL NOTES:

WGI INC. HAS EXERCISED ITS BEST PROFESSIONAL EXPERTISE AND GEOPHYSICAL PROSPECTING TECHNIQUES TO DEVELOP THIS MAPPING OF SUBSURFACE UTILITIES WITHIN THE PROJECT LIMITS.

WGI INC. DOES NOT GUARANTEE THAT UTILITIES SHOWN COMPRISE ALL UTILITIES WITHIN THE PROJECT AREA.

WGI's FIELD INVESTIGATION WAS PERFORMED 11/19/19 THROUGH 01/03/20. CHANGES TO UTILITIES AFTER 01/03/20 MAY HAVE BEEN MADE AND THEREFORE MAY RESULT IN VARIANCES FROM THIS PLAN IF DEEMED ADVISABLE PRIOR TO FINAL DESIGN AND CONSTRUCTION.

FIELD LOCATED UTILITIES MEET THE FEDERAL HIGHWAY ADMINISTRATION DEFINITION FOR "QUALITY LEVEL B" (QLB) STANDARDS.

ALL UTILITIES SHOWN ARE QUALITY LEVEL B (QLB) UNLESS NOTED OTHERWISE.

ALL ELECTRONIC DEPTHS PROVIDED ARE APPROXIMATE AND SHOULD BE USED FOR INFORMATIONAL PURPOSES ONLY.

UTILITY LEGEND:

- A — AERIAL
- UNKNOWN UTILITY
- O — OIL
- CTV — CABLE TV
- T — TELEPHONE
- G — GAS
- E — ELECTRIC
- E — TRAFFIC SIGNAL/LIGHTING
- W — WATER
- FORCE MAIN
- FO — FIBER OPTIC
- TEST HOLE
- EOI — END OF INFORMATION
- ED — ELECTRONIC DEPTH

JOHN J. BELLIS
062-044796
REGISTERED PROFESSIONAL ENGINEER OF ILLINOIS

John J Bellis
signature

04/06/20
date

license expires 11/30/2021

AMERICAN SURVEYING & ENGINEERING
American Surveying & Engineering, P.C.
30 N. LaSalle St., Suite 3440
Chicago, IL 60602
Phone No. (312) 277-2000

WGI
2001 Butterfield Road, Suite 410
Downers Grove, IL 60515
Phone No. (630) 307-3800
Fax No. (630) 307-7030
Cert No. 6091 - LB No. 7055

USER NAME = Erick.Maleza	DESIGNED -	REVISED -	
	DRAWN - EM	REVISED -	
PLOT SCALE = 100.0000 ' / in.	CHECKED - EG	REVISED -	
PLOT DATE = 4/6/2020	DATE -	REVISED -	

STATE OF ILLINOIS
DEPARTMENT OF TRANSPORTATION

I-80 FROM ROCK RUN CREEK TO LARKIN AVE.
JOLIET, ILLINOIS

SCALE: | SHEET 13 OF 15 SHEETS | STA. | TO STA.

F.A. RTE.	SECTION	COUNTY	TOTAL SHEETS	SHEET NO.
		WILL	15	13
		CONTRACT NO. P-91-185-09		
		ILLINOIS	FED. AID PROJECT	

IDOT W.O. 212

exp.

USER NAME = SALASL	DESIGNED - CMA	REVISED -	
	DRAWN - CMA	REVISED -	
PLOT SCALE = 0.16666667 ' / IN.	CHECKED - BRH	REVISED -	
PLOT DATE = 11/12/2025	DATE - 11/12/2025	REVISED -	

STATE OF ILLINOIS
DEPARTMENT OF TRANSPORTATION

I-80
SUE UTILITIES

SCALE: NTS | SHEET OF SHEETS | STA. | TO STA.

F.A.I. RTE.	SECTION	COUNTY	TOTAL SHEETS	SHEET NO.
80	FAI 80 21 VLS	VARIOUS	467	89
		CONTRACT NO. 62R19		
		ILLINOIS	FED. AID PROJECT	

MODEL: 2D SHEET H
FILE NAME: C:\TRANSYSTEMS\PW_LOCAL\TRANSYSTEMS-PW-01\D0MS31451\62R19-SHT-SUE-40.DGN

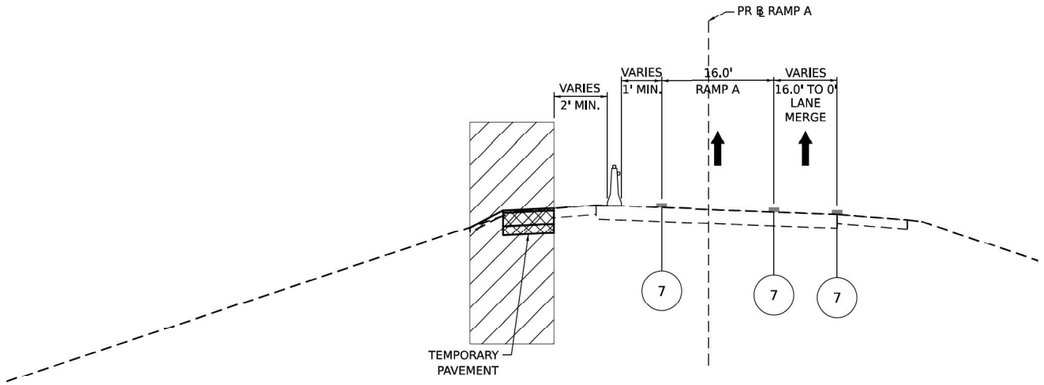

TYPICAL SECTION RAMP A STAGE 1

STA 408+00.00

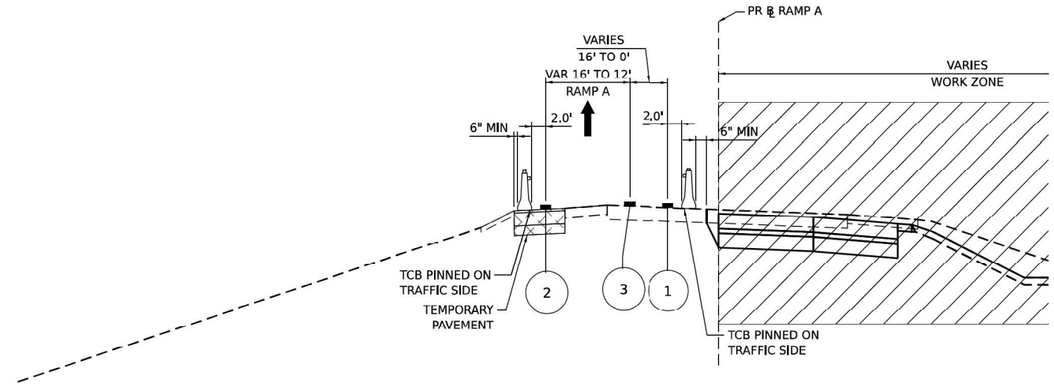

TYPICAL SECTION RAMP A STAGE 2A.1

STA 408+00.00

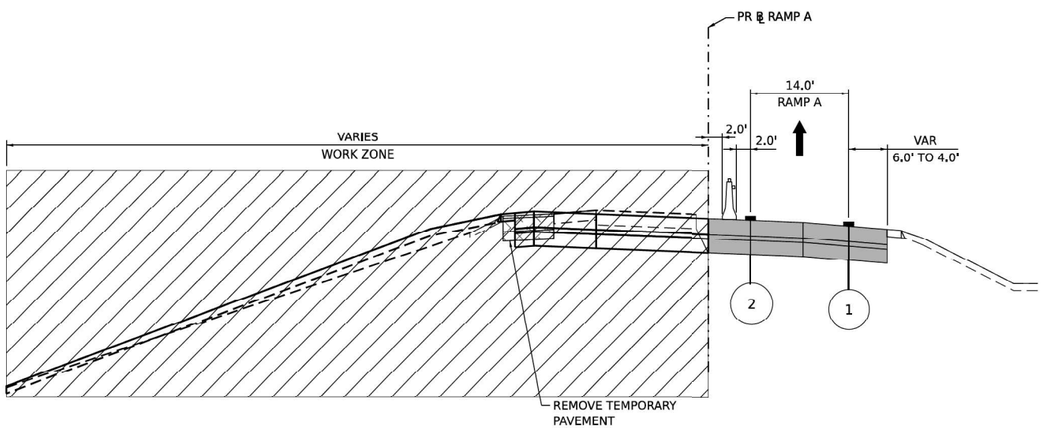

TYPICAL SECTION RAMP A STAGE 2A.2 AND 2B

STA 408+00.00

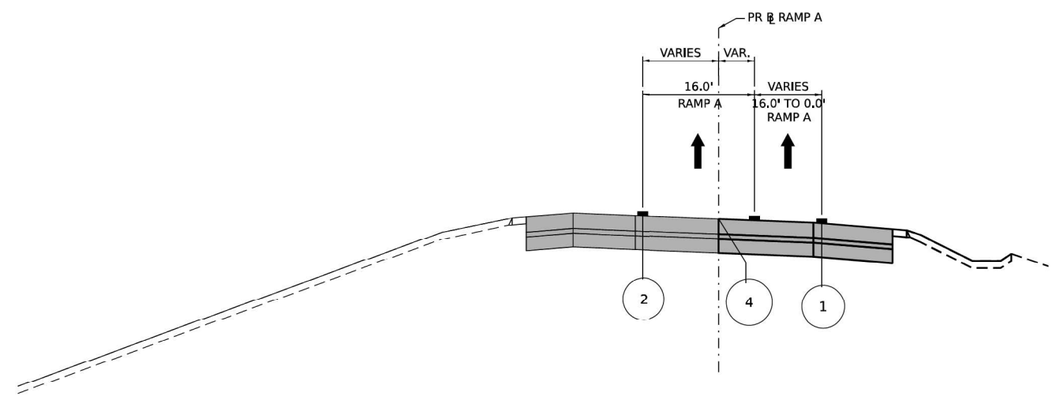

TYPICAL SECTION RAMP A STAGE 3

STA 408+00.00

LEGEND

- WORK ZONE
- TEMPORARY PAVEMENT
- TEMPORARY PAVEMENT FROM PREVIOUS STAGE
- COMPLETED PERMANENT PAVEMENT
- DIRECTION OF TRAVEL FLOW
- TEMPORARY CONCRETE BARRIER
- TYPE II BARRICADES OR DRUMS
- VERTICAL PANEL
- (1) TEMP PVT MK L4 EPOXY (SOLID WHITE)
- (2) TEMP PVT MK L4 EPOXY (SOLID YELLOW)
- (3) TEMP PVT MK L4 EPOXY (2' DASH 6' SKIP, WHITE)
- (4) TEMP PVT MK L5 EPOXY (10' DASH 30' SKIP, WHITE)
- (5) TEMP PVT MK L8 EPOXY (SOLID WHITE)
- (6) TEMP PVT MK L8 EPOXY (3' DASH 9' SKIP, WHITE)
- (7) EXISTING PAVEMENT MARKING
- (8) TEMP SOIL RETEN SYSTM
- * FROM PREVIOUS STAGE TO REMAIN

MODEL: Default
FILE NAME: pw://transystems-pw.bentley.com:transyscorp-pw1-hosted/Documents/Projects_2018/CH031/411180022/02-Transystems/CAD/62R27/Sheets/09-MOT0162627-SHT-MOT-TYP-06.dgn

AECOM
303 EAST WACKER DRIVE, SUITE 1400
CHICAGO, IL 60601-5276
PHONE: (312) 373-7700 FAX: (312) 373-6800

USER NAME = amkluver	DESIGNED - NWM	REVISED -	
	DRAWN - PP	REVISED -	
PLOT SCALE = 20.000 ' / in.	CHECKED - SPF	REVISED -	
PLOT DATE = 7/27/2023	DATE -	REVISED -	

STATE OF ILLINOIS
DEPARTMENT OF TRANSPORTATION

SUGGESTED STAGES OF CONSTRUCTION AND TRAFFIC CONTROL PLAN
TYPICAL SECTIONS – HOUBOLT RD RAMPS

SCALE: | SHEET 8 OF 18 SHEETS | STA. TO STA.

F.A.I. RTE.	SECTION	COUNTY	TOTAL SHEETS	SHEET NO.
I-80	FAI 80 21 STRUCTURE 6	WILL	898	116
		CONTRACT NO. 62R27		
		ILLINOIS	FED. AID PROJECT	

MODEL: 2D SHEET H
FILE NAME: C:\TRANSYSTEMS\PW_LOCAL\TRANSYSTEMS-PW-01\DMS31452\62R19-SHT-62R27-STAGING-06.DGN

exp.

USER NAME = SALASL	DESIGNED -	REVISED -	
	DRAWN -	REVISED -	
PLOT SCALE = 0.16666667 ' / IN.	CHECKED -	REVISED -	
PLOT DATE = 10/14/2025	DATE - 8/22/2025	REVISED -	

STATE OF ILLINOIS
DEPARTMENT OF TRANSPORTATION

I-80 MAINTENANCE OF TRAFFIC
CONTRACT 62R27 (FOR INFORMATION ONLY)

SCALE: N.T.S. | SHEET OF SHEETS | STA. TO STA.

F.A.I. RTE.	SECTION	COUNTY	TOTAL SHEETS	SHEET NO.
80	FAI 80 21 VLS	VARIOUS	553	90
		CONTRACT NO. 62R19		
		ILLINOIS	FED. AID PROJECT	

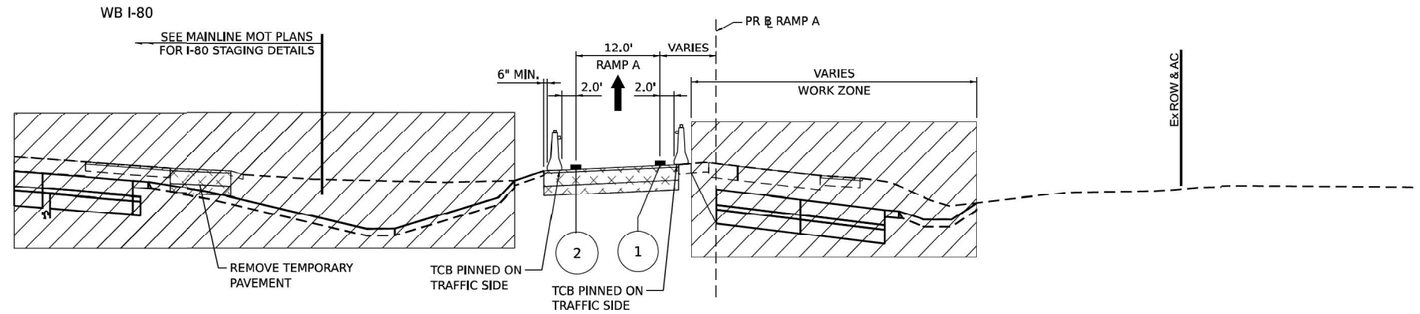

TYPICAL SECTION RAMP A STAGE 2A.1

STA 412+00.00

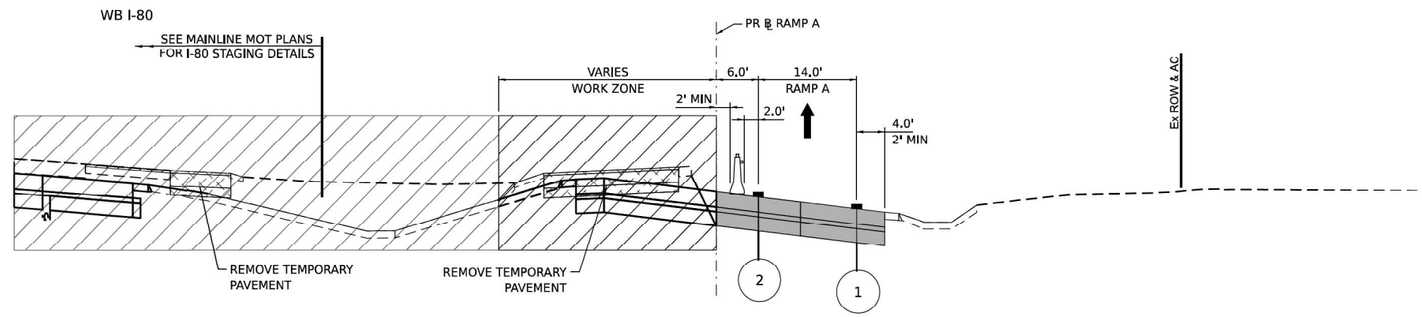

TYPICAL SECTION RAMP A STAGE 2A.2 AND 2B

STA 412+00.00

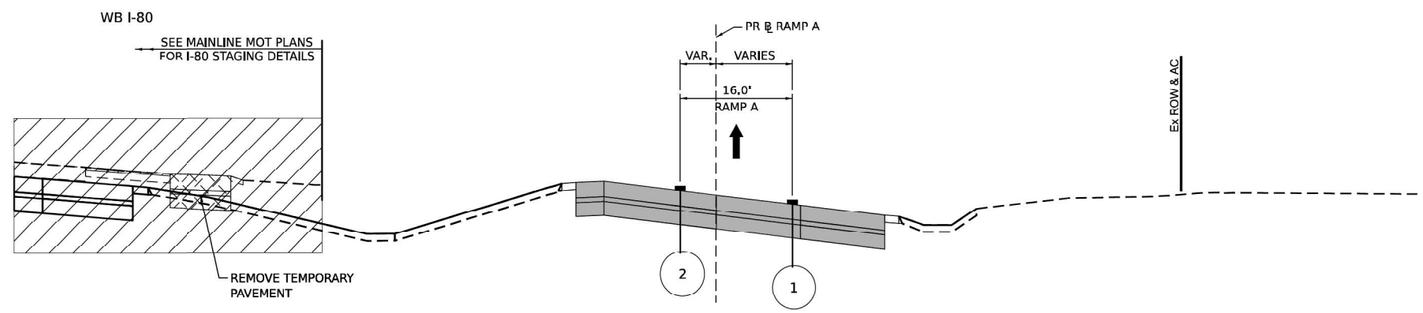

TYPICAL SECTION RAMP A STAGE 3

STA 412+00.00

LEGEND

- WORK ZONE
- TEMPORARY PAVEMENT
- TEMPORARY PAVEMENT FROM PREVIOUS STAGE
- COMPLETED PERMANENT PAVEMENT
- DIRECTION OF TRAVEL FLOW
- TEMPORARY CONCRETE BARRIER
- TYPE II BARRICADES OR DRUMS
- VERTICAL PANEL
- (1) TEMP PVT MK L4 EPOXY (SOLID WHITE)
- (2) TEMP PVT MK L4 EPOXY (SOLID YELLOW)
- (3) TEMP PVT MK L4 EPOXY (2' DASH 6' SKIP, WHITE)
- (4) TEMP PVT MK L5 EPOXY (10' DASH 30' SKIP, WHITE)
- (5) TEMP PVT MK L8 EPOXY (SOLID WHITE)
- (6) TEMP PVT MK L8 EPOXY (3' DASH 9' SKIP, WHITE)
- (7) EXISTING PAVEMENT MARKING
- (8) TEMP SOIL RETEN SYSTM
- * FROM PREVIOUS STAGE TO REMAIN

MODEL: Default
FILE NAME: pw://transystems-pw.bentley.com:transyscorp-pw1-hosted/Documents/Projects_2018/CH401/401180022/02-TransSystems/CAD/62R17/Sheets/09-MOT/D162527-SHT-MOT-TYP-08.dgn

AECOM
303 EAST WACKER DRIVE, SUITE 1400
CHICAGO, IL 60601-5276
PHONE: (312) 373-7700 FAX: (312) 373-6800

USER NAME = aniklover	DESIGNED - NWM	REVISED -	
	DRAWN - PP	REVISED -	
PLOT SCALE = 20.000 ' / in.	CHECKED - SPF	REVISED -	
PLOT DATE = 7/27/2023	DATE -	REVISED -	

STATE OF ILLINOIS
DEPARTMENT OF TRANSPORTATION

SUGGESTED STAGES OF CONSTRUCTION AND TRAFFIC CONTROL PLAN
TYPICAL SECTIONS – HOUBOLT RD RAMPS

SCALE: | SHEET 10 OF 18 SHEETS | STA. | TO STA.

F.A.I. RTE.	SECTION	COUNTY	TOTAL SHEETS	SHEET NO.
I-80	FAI 80 21 STRUCTURE 6	WILL	898	118
		CONTRACT NO. 62R27		
	ILLINOIS	FED. AID PROJECT		

MODEL: 2D SHEET M
FILE NAME: C:\TRANSYSTEMS\PW_LOCAL\TRANSYSTEMS-PW-01\DMS31452\62R19-SHT-62R27-STAGING-07.DGN

exp.

USER NAME = SALASL	DESIGNED -	REVISED -	
	DRAWN -	REVISED -	
PLOT SCALE = 0.16666667 ' / IN.	CHECKED -	REVISED -	
PLOT DATE = 10/14/2025	DATE - 8/22/2025	REVISED -	

STATE OF ILLINOIS
DEPARTMENT OF TRANSPORTATION

I–80 MAINTENANCE OF TRAFFIC
CONTRACT 62R27 (FOR INFORMATION ONLY)

SCALE: N.T.S. | SHEET OF SHEETS | STA. | TO STA.

F.A.I. RTE.	SECTION	COUNTY	TOTAL SHEETS	SHEET NO.
80	FAI 80 21 VLS	VARIOUS	553	91
		CONTRACT NO. 62R19		
	ILLINOIS	FED. AID PROJECT		

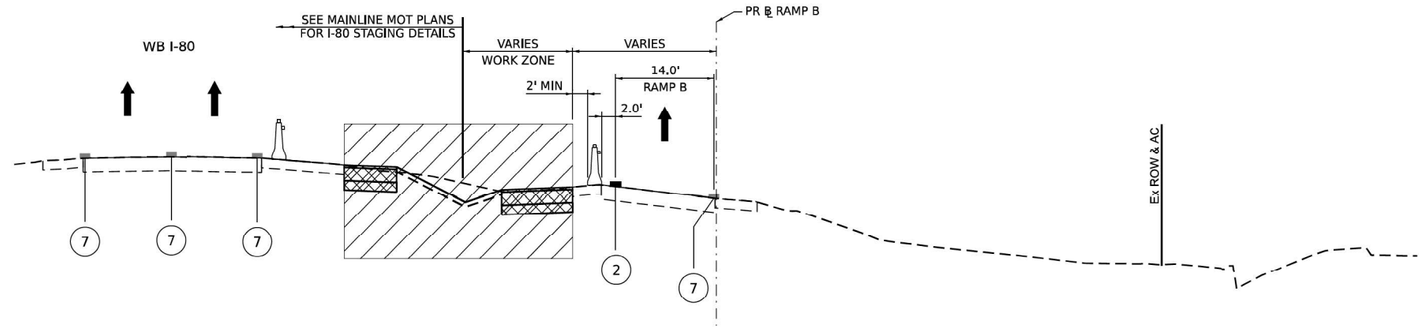

TYPICAL SECTION RAMP B PRESTAGE 2 AND 3

STA 307+00.00

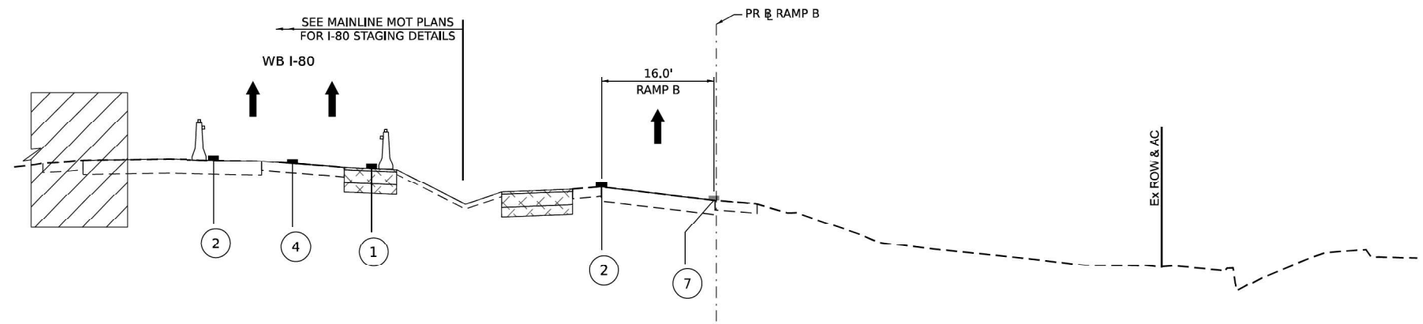

TYPICAL SECTION RAMP B STAGE 1

STA 307+00.00

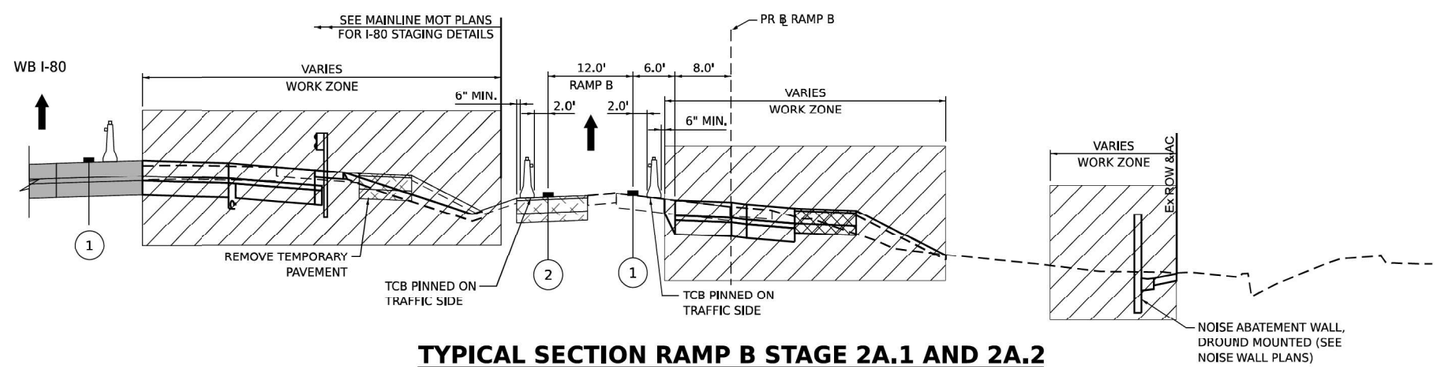

TYPICAL SECTION RAMP B STAGE 2A.1 AND 2A.2

STA 307+00.00

LEGEND

- WORK ZONE
- TEMPORARY PAVEMENT
- TEMPORARY PAVEMENT FROM PREVIOUS STAGE
- COMPLETED PERMANENT PAVEMENT
- DIRECTION OF TRAVEL FLOW
- TEMPORARY CONCRETE BARRIER
- TYPE II BARRICADES OR DRUMS
- VERTICAL PANEL

1. TEMP PVT MK L4 EPOXY (SOLID WHITE)
2. TEMP PVT MK L4 EPOXY (SOLID YELLOW)
3. TEMP PVT MK L4 EPOXY (2' DASH 6' SKIP, WHITE)
4. TEMP PVT MK L5 EPOXY (10' DASH 30' SKIP, WHITE)
5. TEMP PVT MK L8 EPOXY (SOLID WHITE)
6. TEMP PVT MK L8 EPOXY (3' DASH 9' SKIP, WHITE)
7. EXISTING PAVEMENT MARKING
8. TEMP SOIL RETEN SYSTM

* FROM PREVIOUS STAGE TO REMAIN

MODEL: Default
FILE NAME: pw://transystems-pw.bentley.com:transyscorp-pw1-hosted/Documents/Projects_2018/CH401/401180022/02-TranSystems/CAD/62R17/Sheets/09-MOTD162R27-SHT-MOT-TYP-09.dgn

AECOM
303 EAST WACKER DRIVE, SUITE 1400
CHICAGO, IL 60601-5276
PHONE: (312) 373-7700 FAX: (312) 373-6800

USER NAME = aniklver	DESIGNED - NWM	REVISED -	
	DRAWN - PP	REVISED -	
PLOT SCALE = 20.000 ' / in.	CHECKED - SPF	REVISED -	
PLOT DATE = 7/27/2023	DATE -	REVISED -	

STATE OF ILLINOIS
DEPARTMENT OF TRANSPORTATION

SUGGESTED STAGES OF CONSTRUCTION AND TRAFFIC CONTROL PLAN
TYPICAL SECTIONS – HOUBOLT RD RAMPS

SCALE: | SHEET 11 OF 18 SHEETS | STA. | TO STA.

F.A.I. RTE.	SECTION	COUNTY	TOTAL SHEETS	SHEET NO.
I-80	FAI 80 21 STRUCTURE 6	WILL	898	119
		CONTRACT NO. 62R27		
		ILLINOIS	FED. AID PROJECT	

MODEL: 2D SHEET H
FILE NAME: C:\TRANSYSTEMS\PW_LOCAL\TRANSYSTEMS-PW-01\DMS31452\62R19-SHT-62R27-STAGING-08.DGN

exp.

USER NAME = SALASL	DESIGNED -	REVISED -	
	DRAWN -	REVISED -	
PLOT SCALE = 0.16666667 ' / IN.	CHECKED -	REVISED -	
PLOT DATE = 10/14/2025	DATE - 8/22/2025	REVISED -	

STATE OF ILLINOIS
DEPARTMENT OF TRANSPORTATION

I-80 MAINTENANCE OF TRAFFIC
CONTRACT 62R27 (FOR INFORMATION ONLY)

SCALE: N.T.S. | SHEET OF SHEETS | STA. | TO STA.

F.A.I. RTE.	SECTION	COUNTY	TOTAL SHEETS	SHEET NO.
80	FAI 80 21 VLS	VARIOUS	553	92
		CONTRACT NO. 62R19		
		ILLINOIS	FED. AID PROJECT	

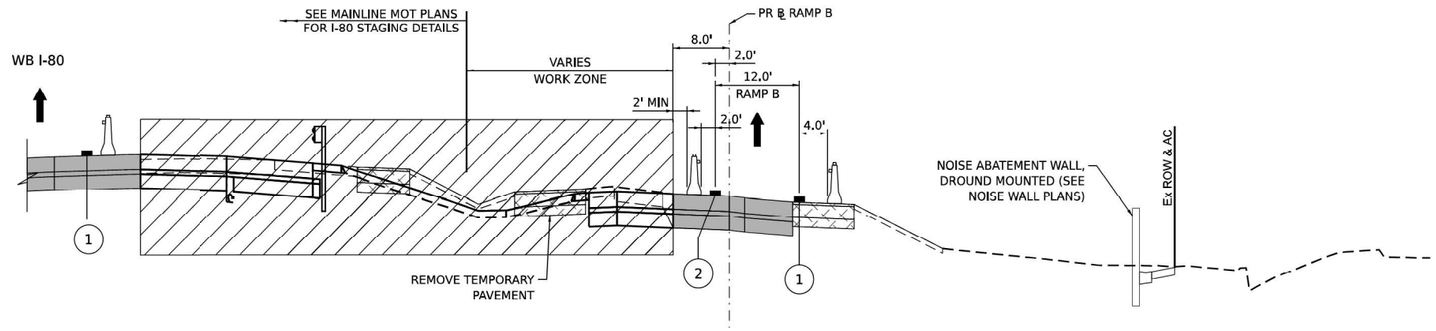

TYPICAL SECTION RAMP B STAGE 2B

STA 307+00.00

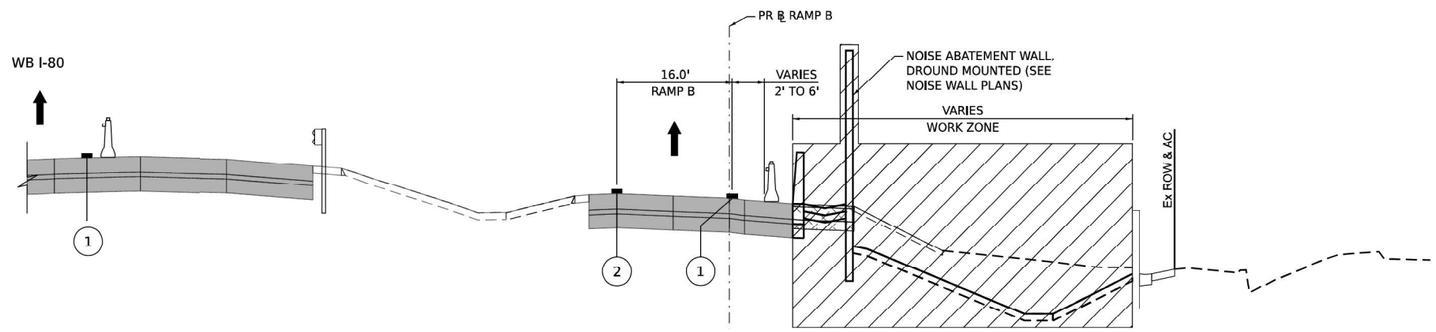

TYPICAL SECTION RAMP B STAGE 3

STA 307+00.00

LEGEND

- WORK ZONE
- TEMPORARY PAVEMENT
- TEMPORARY PAVEMENT FROM PREVIOUS STAGE
- COMPLETED PERMANENT PAVEMENT
- DIRECTION OF TRAVEL FLOW
- TEMPORARY CONCRETE BARRIER
- TYPE II BARRICADES OR DRUMS
- VERTICAL PANEL
- (1) TEMP PVT MK L4 EPOXY (SOLID WHITE)
- (2) TEMP PVT MK L4 EPOXY (SOLID YELLOW)
- (3) TEMP PVT MK L4 EPOXY (2' DASH 6' SKIP, WHITE)
- (4) TEMP PVT MK L5 EPOXY (10' DASH 30' SKIP, WHITE)
- (5) TEMP PVT MK L8 EPOXY (SOLID WHITE)
- (6) TEMP PVT MK L8 EPOXY (3' DASH 9' SKIP, WHITE)
- (7) EXISTING PAVEMENT MARKING
- (8) TEMP SOIL RETEN SYSTM
- * FROM PREVIOUS STAGE TO REMAIN

MODEL: Default
FILE NAME: pw://transystems-pw.bentley.com:transyscorp-pw1-hosted/Documents/Projects_2018/CH401/401180022/02-TransSystems/CAD/62R17/Sheets/09-MOT/D162527-SHT-MOT-TYP-10.dgn

AECOM
303 EAST WACKER DRIVE, SUITE 1400
CHICAGO, IL 60601-5276
PHONE: (312) 373-7700 FAX: (312) 373-6800

USER NAME = ainkluver	DESIGNED - NWM	REVISED -	
	DRAWN - PP	REVISED -	
PLOT SCALE = 20.000 ' / in.	CHECKED - SPF	REVISED -	
PLOT DATE = 7/27/2023	DATE -	REVISED -	

STATE OF ILLINOIS
DEPARTMENT OF TRANSPORTATION

SUGGESTED STAGES OF CONSTRUCTION AND TRAFFIC CONTROL PLAN
TYPICAL SECTIONS – HOUBOLT RD RAMPS

SCALE: | SHEET 12 OF 18 SHEETS | STA. TO STA.

F.A.I. RTE.	SECTION	COUNTY	TOTAL SHEETS	SHEET NO.
I-80	FAI 80 21 STRUCTURE 6	WILL	898	120
		CONTRACT NO. 62R27		
		ILLINOIS	FED. AID PROJECT	

MODEL: 2D SHEET M
FILE NAME: C:\TRANSYSTEMS\PW_LOCAL\TRANSYSTEMS-PW-01\DMS31452\62R19-SHT-62R27-STAGING-09.DGN

exp.

USER NAME = SALASL	DESIGNED -	REVISED -	
	DRAWN -	REVISED -	
PLOT SCALE = 0.16666667 ' / IN.	CHECKED -	REVISED -	
PLOT DATE = 10/14/2025	DATE - 8/22/2025	REVISED -	

STATE OF ILLINOIS
DEPARTMENT OF TRANSPORTATION

I-80 MAINTENANCE OF TRAFFIC
CONTRACT 62R27 (FOR INFORMATION ONLY)

SCALE: N.T.S. | SHEET OF SHEETS | STA. TO STA.

F.A.I. RTE.	SECTION	COUNTY	TOTAL SHEETS	SHEET NO.
80	FAI 80 21 VLS	VARIOUS	553	93
		CONTRACT NO. 62R19		
		ILLINOIS	FED. AID PROJECT	

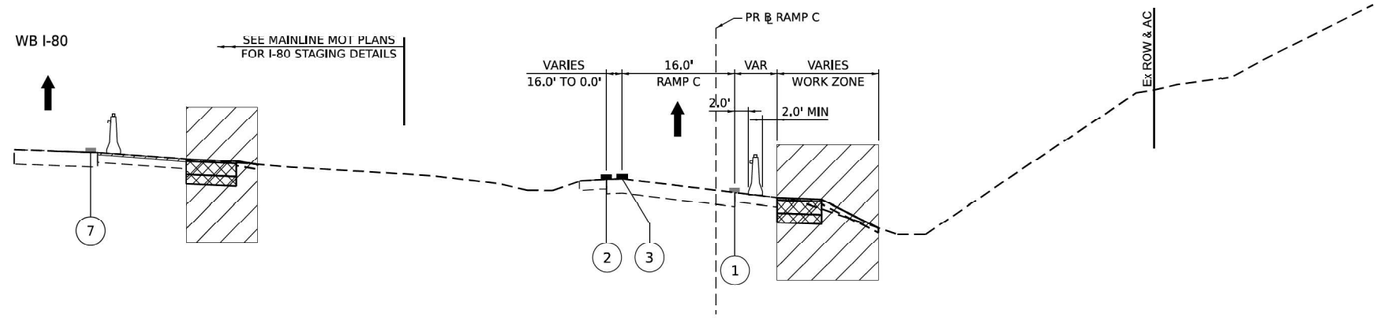

TYPICAL SECTION RAMP C PRESTAGE 3

STA 210+00.00

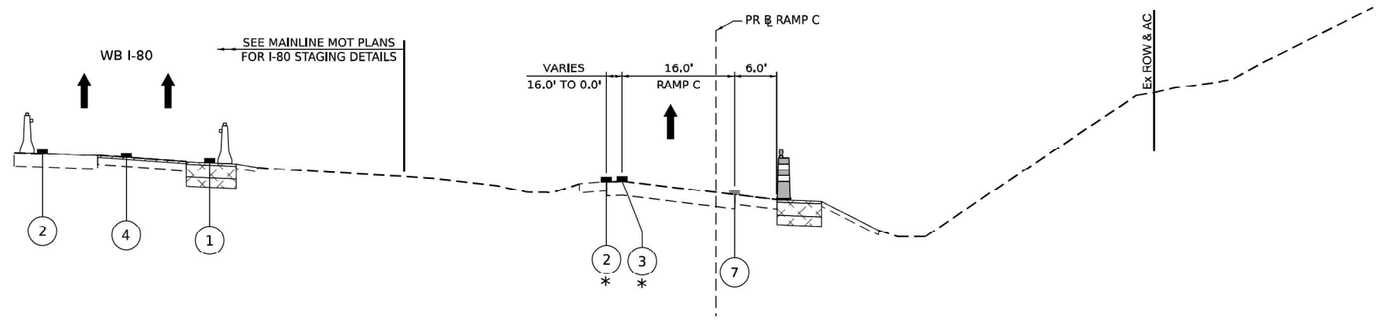

TYPICAL SECTION RAMP C STAGE 1

STA 210+00.00

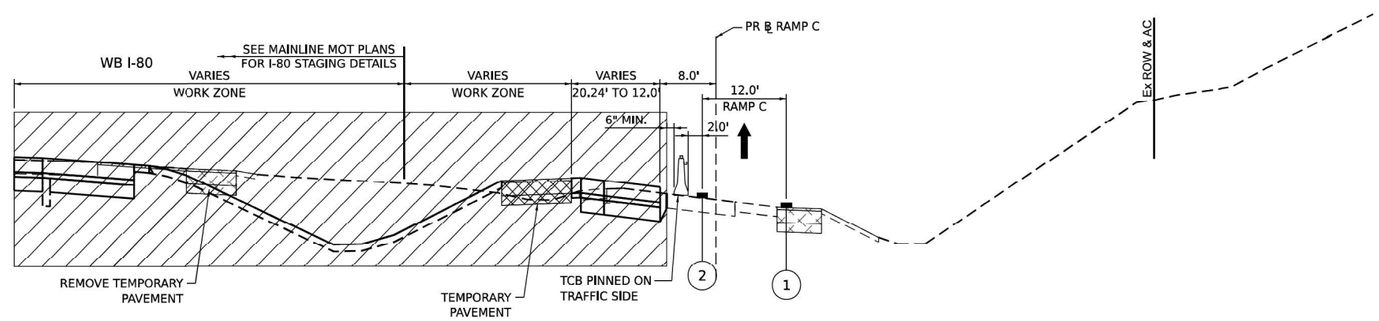

TYPICAL SECTION RAMP C STAGE 2A.1 AND 2A.2

STA 210+00.00

LEGEND

- WORK ZONE
- TEMPORARY PAVEMENT
- TEMPORARY PAVEMENT FROM PREVIOUS STAGE
- COMPLETED PERMANENT PAVEMENT
- DIRECTION OF TRAVEL FLOW
- TEMPORARY CONCRETE BARRIER
- TYPE II BARRICADES OR DRUMS
- VERTICAL PANEL
- (1) TEMP PVT MK L4 EPOXY (SOLID WHITE)
- (2) TEMP PVT MK L4 EPOXY (SOLID YELLOW)
- (3) TEMP PVT MK L4 EPOXY (2' DASH 6' SKIP, WHITE)
- (4) TEMP PVT MK L5 EPOXY (10' DASH 30' SKIP, WHITE)
- (5) TEMP PVT MK L8 EPOXY (SOLID WHITE)
- (6) TEMP PVT MK L8 EPOXY (3' DASH 9' SKIP, WHITE)
- (7) EXISTING PAVEMENT MARKING
- (8) TEMP SOIL RETEN SYSTM
- * FROM PREVIOUS STAGE TO REMAIN

MODEL: Default
FILE NAME: pw://transystems-pw.bentley.com:transyscorp-pw1-hosted/Documents/Projects_2018/CH401/401180022/02-TransSystems/CAD/62R27/Sheets/09-MOT/D162527-SHT-MOT-TYP-11.dgn

AECOM
303 EAST WACKER DRIVE, SUITE 1400
CHICAGO, IL 60601-5276
PHONE: (312) 373-7700 FAX: (312) 373-6800

USER NAME = aniklover	DESIGNED - NWM	REVISED -	
	DRAWN - PP	REVISED -	
PLOT SCALE = 20.000 ' / in.	CHECKED - SPF	REVISED -	
PLOT DATE = 7/27/2023	DATE -	REVISED -	

STATE OF ILLINOIS
DEPARTMENT OF TRANSPORTATION

SUGGESTED STAGES OF CONSTRUCTION AND TRAFFIC CONTROL PLAN
TYPICAL SECTIONS – HOUBOLT RD RAMPS

SCALE: | SHEET 13 OF 18 SHEETS | STA. | TO STA.

F.A.I. RTE.	SECTION	COUNTY	TOTAL SHEETS	SHEET NO.
I-80	FAI 80 21 STRUCTURE 6	WILL	898	121
		CONTRACT NO. 62R27		
		ILLINOIS	FED. AID PROJECT	

MODEL: 2D SHEET H
FILE NAME: C:\TRANSYSTEMS\PW_LOCAL\TRANSYSTEMS-PW-01\DMS31452\62R19-SHT-62R27-STAGING-10.DGN

exp.

USER NAME = SALASL	DESIGNED -	REVISED -	
	DRAWN -	REVISED -	
PLOT SCALE = 0.16666667 ' / IN.	CHECKED -	REVISED -	
PLOT DATE = 10/14/2025	DATE - 8/22/2025	REVISED -	

STATE OF ILLINOIS
DEPARTMENT OF TRANSPORTATION

I–80 MAINTENANCE OF TRAFFIC
CONTRACT 62R27 (FOR INFORMATION ONLY)

SCALE: N.T.S. | SHEET OF SHEETS | STA. | TO STA.

F.A.I. RTE.	SECTION	COUNTY	TOTAL SHEETS	SHEET NO.
80	FAI 80 21 VLS	VARIOUS	553	94
		CONTRACT NO. 62R19		
		ILLINOIS	FED. AID PROJECT	

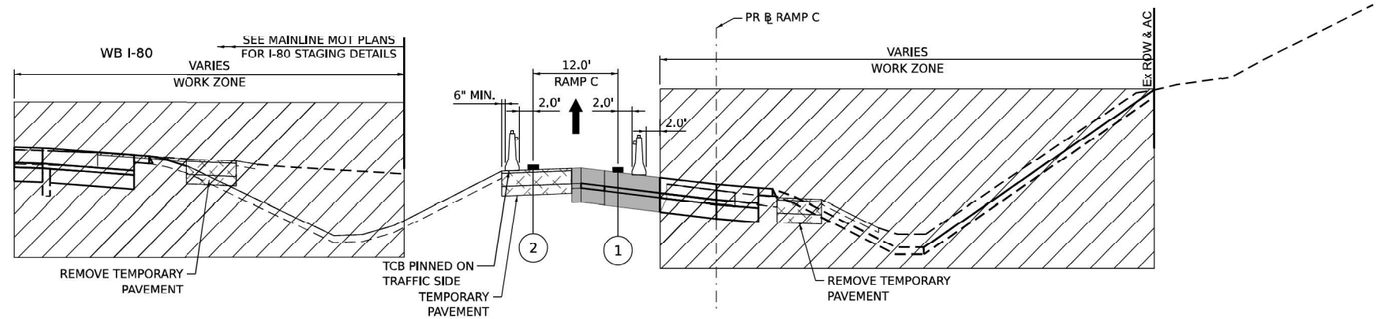

TYPICAL SECTION RAMP C STAGE 2B

STA 210+00.00

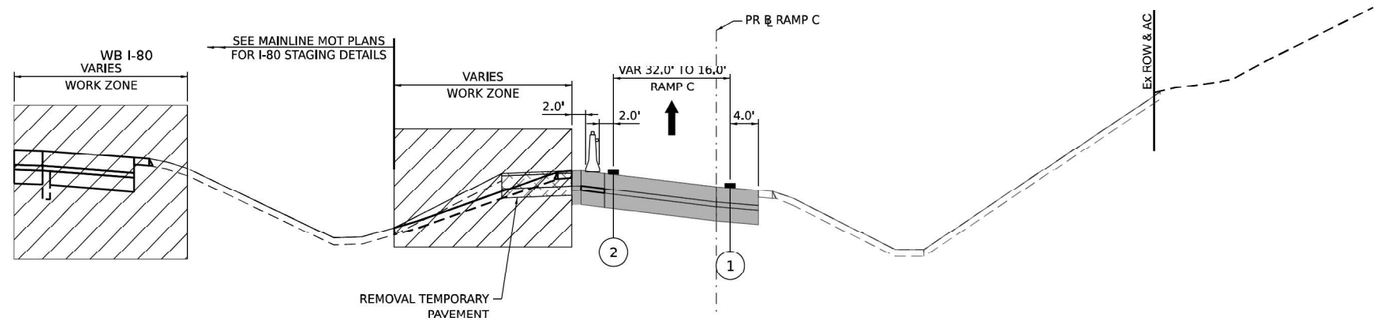

TYPICAL SECTION RAMP C STAGE 3

STA 210+00.00

LEGEND

- WORK ZONE
- TEMPORARY PAVEMENT
- TEMPORARY PAVEMENT FROM PREVIOUS STAGE
- COMPLETED PERMANENT PAVEMENT
- DIRECTION OF TRAVEL FLOW
- TEMPORARY CONCRETE BARRIER
- TYPE II BARRICADES OR DRUMS
- VERTICAL PANEL
- (1) TEMP PVT MK L4 EPOXY (SOLID WHITE)
- (2) TEMP PVT MK L4 EPOXY (SOLID YELLOW)
- (3) TEMP PVT MK L4 EPOXY (2' DASH 6' SKIP, WHITE)
- (4) TEMP PVT MK L5 EPOXY (10' DASH 30' SKIP, WHITE)
- (5) TEMP PVT MK L8 EPOXY (SOLID WHITE)
- (6) TEMP PVT MK L8 EPOXY (3' DASH 9' SKIP, WHITE)
- (7) EXISTING PAVEMENT MARKING
- (8) TEMP SOIL RETEN SYSTM
- * FROM PREVIOUS STAGE TO REMAIN

MODEL: Default
FILE NAME: pw://transystems-pw.bentley.com:transyscorp-pw1-hosted/Documents/Projects_2018/CH401/401180022/02-TransSystems/CAD/62R17/Sheets/09-MOT/D162527-SHT-MOT-TYP-12.dgn

AECOM
303 EAST WACKER DRIVE, SUITE 1400
CHICAGO, IL 60601-5276
PHONE: (312) 373-7700 FAX: (312) 373-6800

USER NAME = ainkluver	DESIGNED - NWM	REVISED -	
	DRAWN - PP	REVISED -	
PLOT SCALE = 20.000 ' / in.	CHECKED - SPF	REVISED -	
PLOT DATE = 7/27/2023	DATE -	REVISED -	

STATE OF ILLINOIS
DEPARTMENT OF TRANSPORTATION

SUGGESTED STAGES OF CONSTRUCTION AND TRAFFIC CONTROL PLAN
TYPICAL SECTIONS – HOUBOLT RD RAMPS

SCALE: | SHEET 14 OF 18 SHEETS | STA. TO STA.

F.A.I. RTE.	SECTION	COUNTY	TOTAL SHEETS	SHEET NO.
I-80	FAI 80 21 STRUCTURE 6	WILL	898	122
		CONTRACT NO. 62R27		
		ILLINOIS	FED. AID PROJECT	

MODEL: 2D SHEET M
FILE NAME: C:\TRANSYSTEMS\PW_LOCAL\TRANSYSTEMS-PW-01\DMS31452\62R19-SHT-62R27-STAGING-11.DGN

exp.

USER NAME = SALASL	DESIGNED -	REVISED -	
	DRAWN -	REVISED -	
PLOT SCALE = 0.16666667 ' / IN.	CHECKED -	REVISED -	
PLOT DATE = 10/14/2025	DATE - 8/22/2025	REVISED -	

STATE OF ILLINOIS
DEPARTMENT OF TRANSPORTATION

I-80 MAINTENANCE OF TRAFFIC
CONTRACT 62R27 (FOR INFORMATION ONLY)

SCALE: N.T.S. | SHEET OF SHEETS | STA. TO STA.

F.A.I. RTE.	SECTION	COUNTY	TOTAL SHEETS	SHEET NO.
80	FAI 80 21 VLS	VARIOUS	553	95
		CONTRACT NO. 62R19		
		ILLINOIS	FED. AID PROJECT	

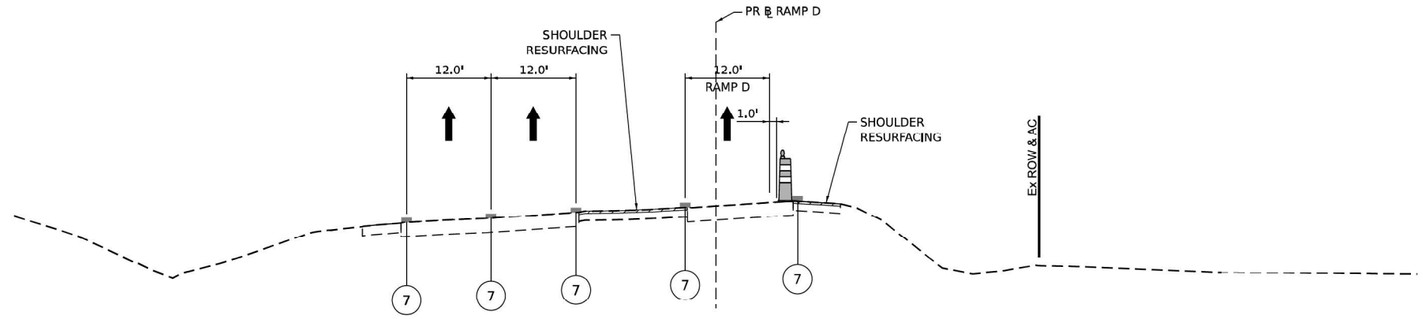

TYPICAL SECTION RAMP D PRESTAGE 1

STA 103+00.00

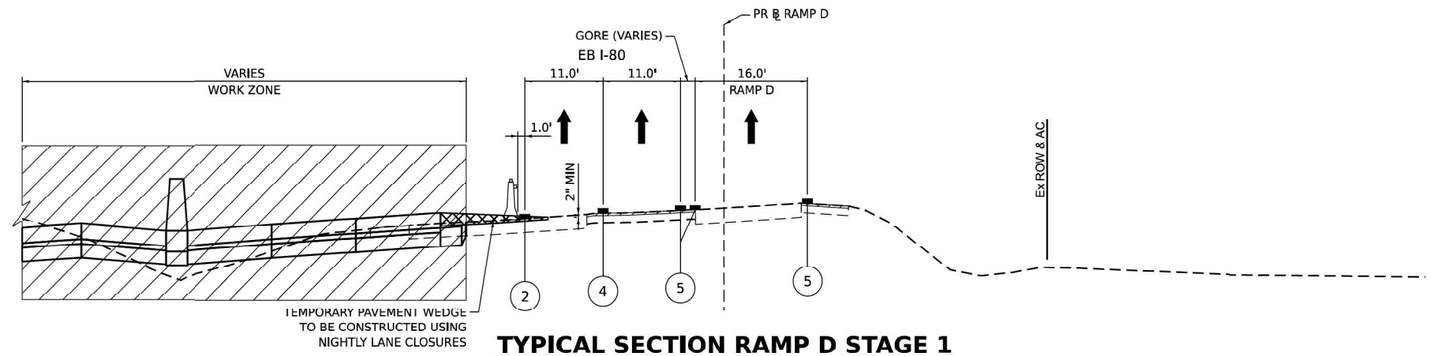

TYPICAL SECTION RAMP D STAGE 1

STA 103+00.00

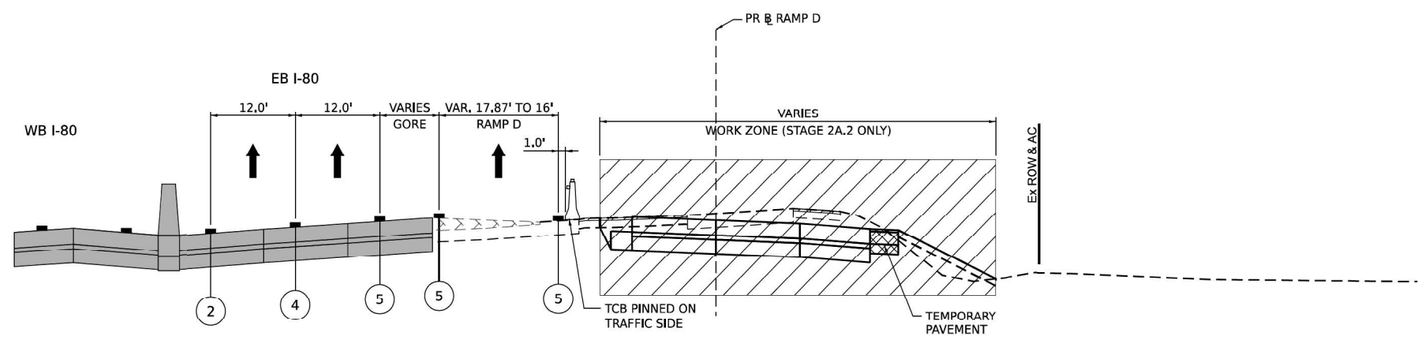

TYPICAL SECTION RAMP D STAGE 2A.1 AND 2A.2

STA 103+00.00

LEGEND

- WORK ZONE
- TEMPORARY PAVEMENT
- TEMPORARY PAVEMENT FROM PREVIOUS STAGE
- COMPLETED PERMANENT PAVEMENT
- DIRECTION OF TRAVEL FLOW
- TEMPORARY CONCRETE BARRIER
- TYPE II BARRICADES OR DRUMS
- VERTICAL PANEL
- (1) TEMP PVT MK L4 EPOXY (SOLID WHITE)
- (2) TEMP PVT MK L4 EPOXY (SOLID YELLOW)
- (3) TEMP PVT MK L4 EPOXY (2' DASH 6' SKIP, WHITE)
- (4) TEMP PVT MK L5 EPOXY (10' DASH 30' SKIP, WHITE)
- (5) TEMP PVT MK L8 EPOXY (SOLID WHITE)
- (6) TEMP PVT MK L8 EPOXY (3' DASH 9' SKIP, WHITE)
- (7) EXISTING PAVEMENT MARKING
- (8) TEMP SOIL RETEN SYSTM
- * FROM PREVIOUS STAGE TO REMAIN

MODEL: Default
FILE NAME: pw://transystems-pw.bentley.com:transyscorp-pw1-hosted/Documents/Projects_2018/CH401/401180022/02-TranSystems/CAD/62R17/Sheets/09-MOT/D162R27-SHT-MOT-TYP-13.dgn

AECOM
303 EAST WACKER DRIVE, SUITE 1400
CHICAGO, IL 60601-5276
PHONE: (312) 373-7700 FAX: (312) 373-6800

USER NAME = arnkluver	DESIGNED - NWM	REVISED -	
	DRAWN - PP	REVISED -	
PLOT SCALE = 20.000 ' / in.	CHECKED - SPF	REVISED -	
PLOT DATE = 7/27/2023	DATE -	REVISED -	

STATE OF ILLINOIS
DEPARTMENT OF TRANSPORTATION

SUGGESTED STAGES OF CONSTRUCTION AND TRAFFIC CONTROL PLAN
TYPICAL SECTIONS – HOUBOLT RD RAMPS

SCALE: | SHEET 15 OF 18 SHEETS | STA. | TO STA.

F.A.I. RTE.	SECTION	COUNTY	TOTAL SHEETS	SHEET NO.
I-80	FAI 80 21 STRUCTURE 6	WILL	898	123
		CONTRACT NO. 62R27		
		ILLINOIS	FED. AID PROJECT	

MODEL: 2D SHEET M
FILE NAME: C:\TRANSYSTEMS\PW_LOCAL\TRANSYSTEMS-PW-01\DMS31452\62R19-SHT-62R27-STAGING-12.DGN

exp.

USER NAME = SALASL	DESIGNED -	REVISED -	
	DRAWN -	REVISED -	
PLOT SCALE = 0.16666667 ' / IN.	CHECKED -	REVISED -	
PLOT DATE = 10/14/2025	DATE - 8/22/2025	REVISED -	

STATE OF ILLINOIS
DEPARTMENT OF TRANSPORTATION

I-80 MAINTENANCE OF TRAFFIC
CONTRACT 62R27 (FOR INFORMATION ONLY)

SCALE: N.T.S. | SHEET OF SHEETS | STA. | TO STA.

F.A.I. RTE.	SECTION	COUNTY	TOTAL SHEETS	SHEET NO.
80	FAI 80 21 VLS	VARIOUS	553	96
		CONTRACT NO. 62R19		
		ILLINOIS	FED. AID PROJECT	

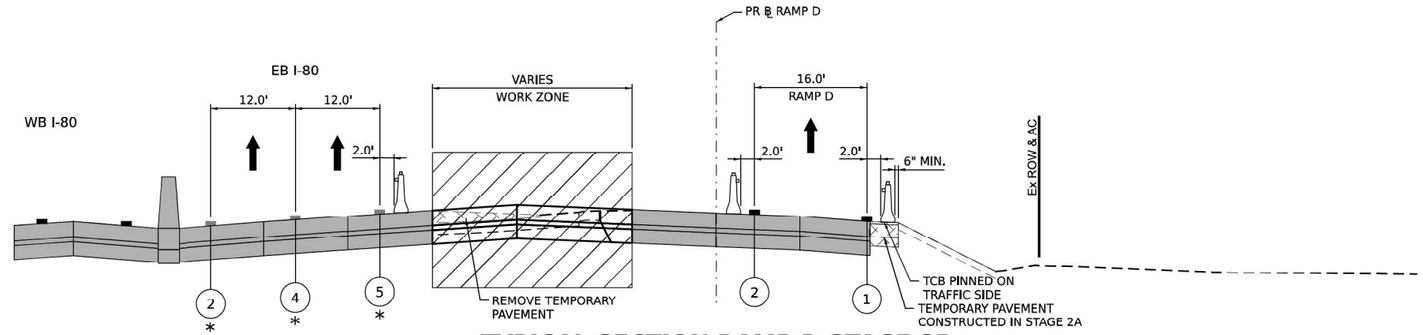

TYPICAL SECTION RAMP D STAGE 2B

STA 103+00.00

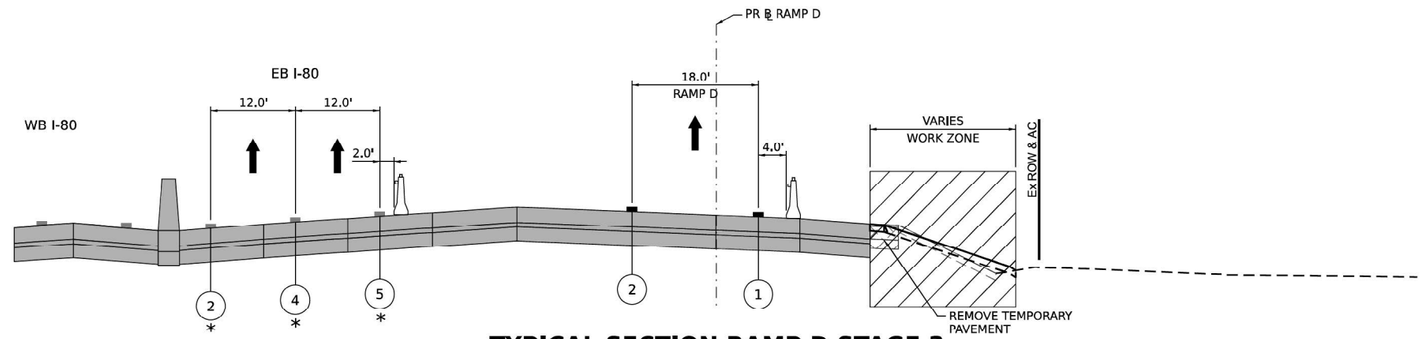

TYPICAL SECTION RAMP D STAGE 3

STA 103+00.00

LEGEND

- WORK ZONE
- TEMPORARY PAVEMENT
- TEMPORARY PAVEMENT FROM PREVIOUS STAGE
- COMPLETED PERMANENT PAVEMENT
- DIRECTION OF TRAVEL FLOW
- TEMPORARY CONCRETE BARRIER
- TYPE II BARRICADES OR DRUMS
- VERTICAL PANEL
- (1) TEMP PVT MK L4 EPOXY (SOLID WHITE)
- (2) TEMP PVT MK L4 EPOXY (SOLID YELLOW)
- (3) TEMP PVT MK L4 EPOXY (2' DASH 6' SKIP, WHITE)
- (4) TEMP PVT MK L5 EPOXY (10' DASH 30' SKIP, WHITE)
- (5) TEMP PVT MK L8 EPOXY (SOLID WHITE)
- (6) TEMP PVT MK L8 EPOXY (3' DASH 9' SKIP, WHITE)
- (7) EXISTING PAVEMENT MARKING
- (8) TEMP SOIL RETEN SYSTM
- * FROM PREVIOUS STAGE TO REMAIN

MODEL: Default
FILE NAME: pw://transystems-pw.bentley.com:transyscorp-pw1-hosted/Documents/Projects_2018/CH401/401180022/02-TransSystems/CAD/62R17/Sheets/09-MOTD162R27-SHT-MOT-TYP-14.dgn

AECOM
303 EAST WACKER DRIVE, SUITE 1400
CHICAGO, IL 60601-5276
PHONE: (312) 373-7700 FAX: (312) 373-6800

USER NAME = ainkluver	DESIGNED - NWM	REVISED -	
	DRAWN - PP	REVISED -	
PLOT SCALE = 20.000 ' / in.	CHECKED - SPF	REVISED -	
PLOT DATE = 7/27/2023	DATE -	REVISED -	

STATE OF ILLINOIS
DEPARTMENT OF TRANSPORTATION

SUGGESTED STAGES OF CONSTRUCTION AND TRAFFIC CONTROL PLAN
TYPICAL SECTIONS – HOUBOLT RD RAMPS

SCALE: | SHEET 16 OF 18 SHEETS | STA. TO STA.

F.A.I. RTE.	SECTION	COUNTY	TOTAL SHEETS	SHEET NO.
I-80	FAI 80 21 STRUCTURE 6	WILL	898	124
		CONTRACT NO. 62R27		
		ILLINOIS	FED. AID PROJECT	

MODEL: 2D SHEET M
FILE NAME: C:\TRANSYSTEMS\PW_LOCAL\TRANSYSTEMS-PW-01\DMS31452\62R19-SHT-62R27-STAGING-13.DGN

exp.

USER NAME = SALASL	DESIGNED -	REVISED -	
	DRAWN -	REVISED -	
PLOT SCALE = 0.16666667 ' / IN.	CHECKED -	REVISED -	
PLOT DATE = 10/14/2025	DATE - 8/22/2025	REVISED -	

STATE OF ILLINOIS
DEPARTMENT OF TRANSPORTATION

I-80 MAINTENANCE OF TRAFFIC
CONTRACT 62R27 (FOR INFORMATION ONLY)

SCALE: N.T.S. | SHEET OF SHEETS | STA. TO STA.

F.A.I. RTE.	SECTION	COUNTY	TOTAL SHEETS	SHEET NO.
80	FAI 80 21 VLS	VARIOUS	553	97
		CONTRACT NO. 62R19		
		ILLINOIS	FED. AID PROJECT	

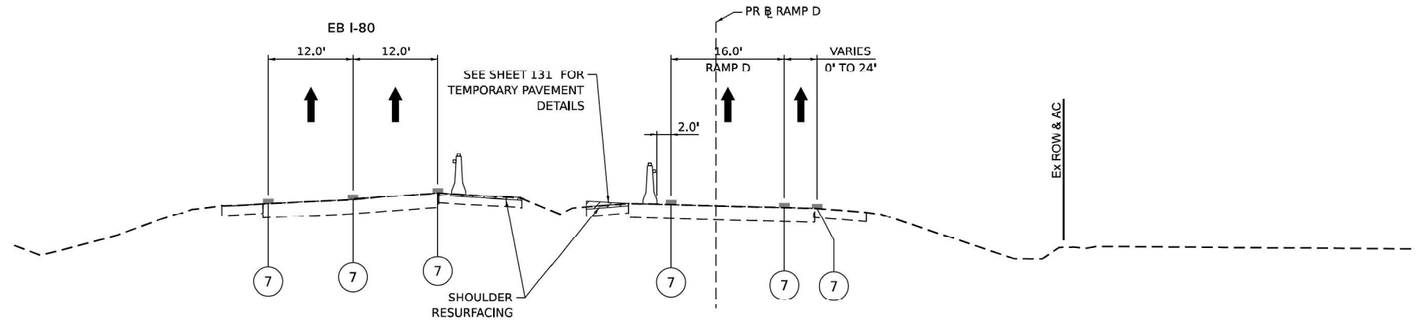

TYPICAL SECTION RAMP D PRESTAGE 1

STA 105+00.00

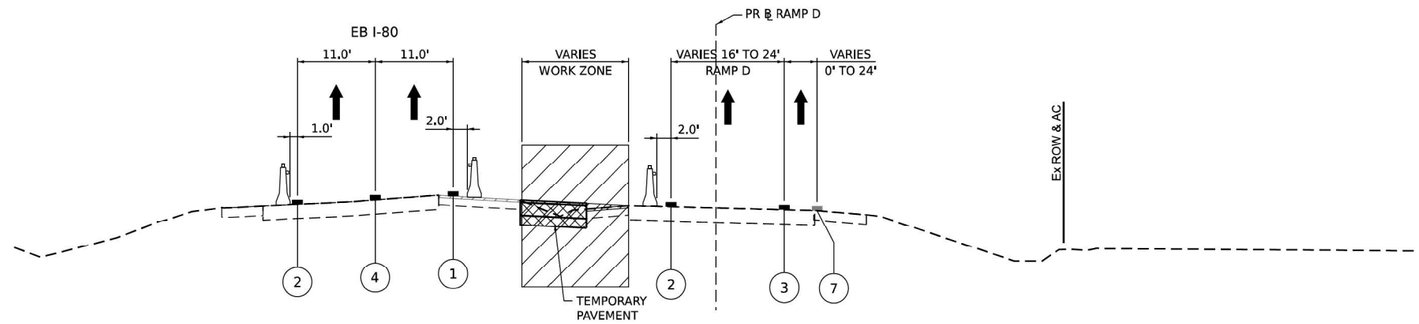

TYPICAL SECTION RAMP D PRESTAGE 2 AND 3

STA 105+00.00

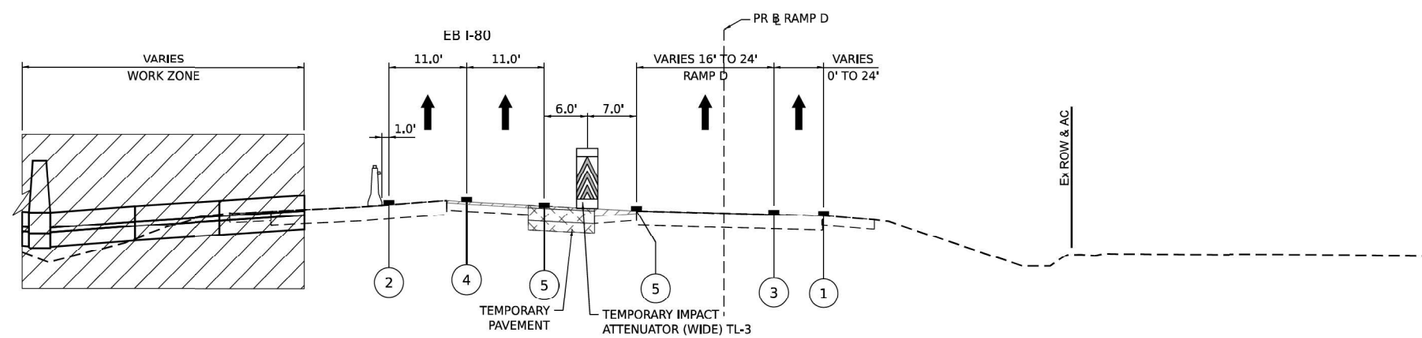

TYPICAL SECTION RAMP D STAGE 1

STA 105+00.00

LEGEND

- WORK ZONE
- TEMPORARY PAVEMENT
- TEMPORARY PAVEMENT FROM PREVIOUS STAGE
- COMPLETED PERMANENT PAVEMENT
- DIRECTION OF TRAVEL FLOW
- TEMPORARY CONCRETE BARRIER
- TYPE II BARRICADES OR DRUMS
- VERTICAL PANEL

1. TEMP PVT MK L4 EPOXY (SOLID WHITE)
2. TEMP PVT MK L4 EPOXY (SOLID YELLOW)
3. TEMP PVT MK L4 EPOXY (2' DASH 6' SKIP, WHITE)
4. TEMP PVT MK L5 EPOXY (10' DASH 30' SKIP, WHITE)
5. TEMP PVT MK L8 EPOXY (SOLID WHITE)
6. TEMP PVT MK L8 EPOXY (3' DASH 9' SKIP, WHITE)
7. EXISTING PAVEMENT MARKING
8. TEMP SOIL RETEN SYSTM

* FROM PREVIOUS STAGE TO REMAIN

MODEL: Default
FILE NAME: pw://transystems-pw.bentley.com:transyscorp-pw1-hosted/Documents/Projects_2018/CH401/401180022/02-TransSystems/CAD/62R17/Sheets/09-MOTD162327-SHT-MOT-TYP-15.dgn

AECOM
303 EAST WACKER DRIVE, SUITE 1400
CHICAGO, IL 60601-5276
PHONE: (312) 373-7700 FAX: (312) 373-6800

USER NAME = aimkluver	DESIGNED - NWM	REVISED -	
	DRAWN - PP	REVISED -	
PLOT SCALE = 20.000 ' / in.	CHECKED - SPF	REVISED -	
PLOT DATE = 7/27/2023	DATE -	REVISED -	

STATE OF ILLINOIS
DEPARTMENT OF TRANSPORTATION

SUGGESTED STAGES OF CONSTRUCTION AND TRAFFIC CONTROL PLAN
TYPICAL SECTIONS – HOUBOLT RD RAMPS

SCALE: | SHEET 17 OF 18 SHEETS | STA. | TO STA.

F.A.I. RTE.	SECTION	COUNTY	TOTAL SHEETS	SHEET NO.
I-80	FAI 80 21 STRUCTURE 6	WILL	898	125
		CONTRACT NO. 62R27		
		ILLINOIS	FED. AID PROJECT	

MODEL: 2D SHEET H
FILE NAME: C:\TRANSYSTEMS\PW_LOCAL\TRANSYSTEMS-PW-01\DMS31452\62R19-SHT-62R27-STAGING-14.DGN

exp.

USER NAME = SALASL	DESIGNED -	REVISED -	
	DRAWN -	REVISED -	
PLOT SCALE = 0.16666667 ' / IN.	CHECKED -	REVISED -	
PLOT DATE = 10/14/2025	DATE - 8/22/2025	REVISED -	

STATE OF ILLINOIS
DEPARTMENT OF TRANSPORTATION

I-80 MAINTENANCE OF TRAFFIC
CONTRACT 62R27 (FOR INFORMATION ONLY)

SCALE: N.T.S. | SHEET OF SHEETS | STA. | TO STA.

F.A.I. RTE.	SECTION	COUNTY	TOTAL SHEETS	SHEET NO.
80	FAI 80 21 VLS	VARIOUS	553	98
		CONTRACT NO. 62R19		
		ILLINOIS	FED. AID PROJECT	

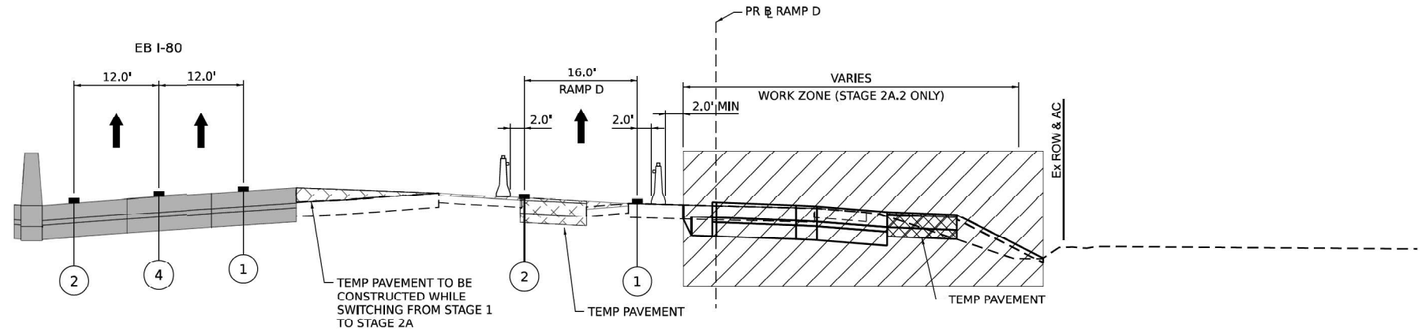

TYPICAL SECTION RAMP D STAGE 2A.1 AND 2A.2

STA 105+00.00

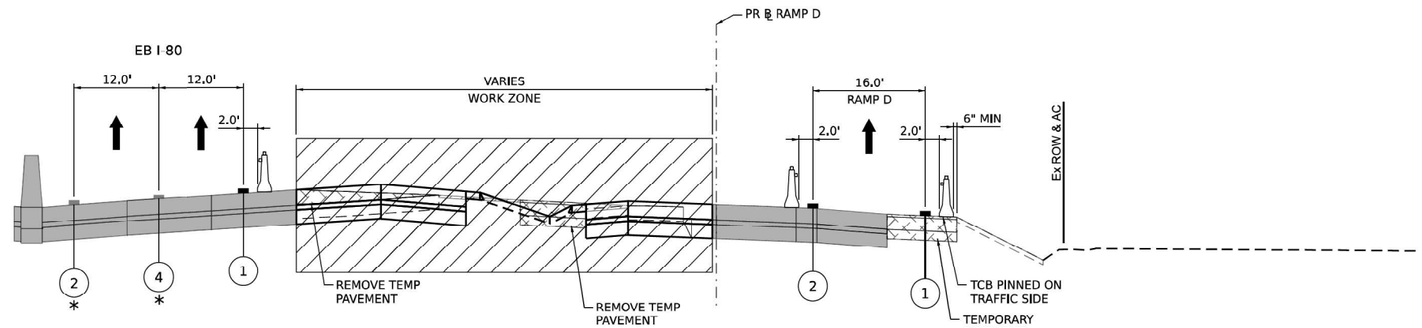

TYPICAL SECTION RAMP D STAGE 2B

STA 105+00.00

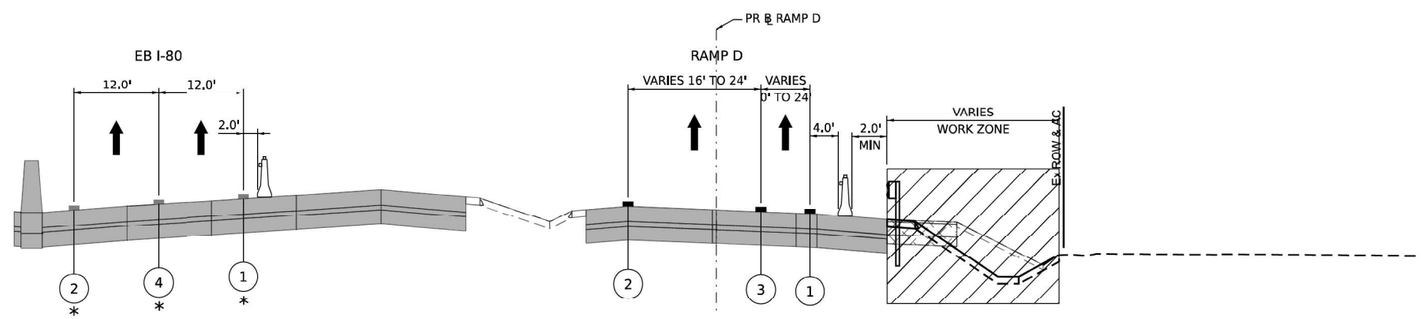

TYPICAL SECTION RAMP D STAGE 3

STA 105+00.00

LEGEND

- WORK ZONE
- TEMPORARY PAVEMENT
- TEMPORARY PAVEMENT FROM PREVIOUS STAGE
- COMPLETED PERMANENT PAVEMENT
- DIRECTION OF TRAVEL FLOW
- TEMPORARY CONCRETE BARRIER
- TYPE II BARRICADES OR DRUMS
- VERTICAL PANEL
- (1) TEMP PVT MK L4 EPOXY (SOLID WHITE)
- (2) TEMP PVT MK L4 EPOXY (SOLID YELLOW)
- (3) TEMP PVT MK L4 EPOXY (2' DASH 6' SKIP, WHITE)
- (4) TEMP PVT MK L5 EPOXY (10' DASH 30' SKIP, WHITE)
- (5) TEMP PVT MK L8 EPOXY (SOLID WHITE)
- (6) TEMP PVT MK L8 EPOXY (3' DASH 9' SKIP, WHITE)
- (7) EXISTING PAVEMENT MARKING
- (8) TEMP SOIL RETEN SYSTM
- * FROM PREVIOUS STAGE TO REMAIN

MODEL: Default
FILE NAME: pw://transystems-pw.bentley.com:transyscorp-pw1-hosted/Documents/Projects_2018/CH401/118002 0/2-TranSystems/CAD/62R17/Sheets/09-MOTD162527-SHT-MOT-TYP-16.dgn

AECOM
303 EAST WACKER DRIVE, SUITE 1400
CHICAGO, IL 60601-5276
PHONE: (312) 373-7700 FAX: (312) 373-6800

USER NAME = arnkluver	DESIGNED - NWM	REVISED -	
	DRAWN - PP	REVISED -	
PLOT SCALE = 20.000 ' / in.	CHECKED - SPF	REVISED -	
PLOT DATE = 7/27/2023	DATE -	REVISED -	

STATE OF ILLINOIS
DEPARTMENT OF TRANSPORTATION

SUGGESTED STAGES OF CONSTRUCTION AND TRAFFIC CONTROL PLAN
TYPICAL SECTIONS – HOUBOLT RD RAMPS

SCALE: | SHEET 18 OF 18 SHEETS | STA. | TO STA.

F.A.I. RTE.	SECTION	COUNTY	TOTAL SHEETS	SHEET NO.
I-80	FAI 80 21 STRUCTURE 6	WILL	898	126
		CONTRACT NO. 62R27		
		ILLINOIS	FED. AID PROJECT	

MODEL: 2D SHEET M
FILE NAME: C:\TRANSYSTEMS\PW_LOCAL\TRANSYSTEMS-PW-01\DMS31445\62R19-SHT-62R27-STAGING-15.DGN

exp.

USER NAME = SALASL	DESIGNED -	REVISED -	
	DRAWN -	REVISED -	
PLOT SCALE = 0.16666667 ' / IN.	CHECKED -	REVISED -	
PLOT DATE = 10/14/2025	DATE - 8/22/2025	REVISED -	

STATE OF ILLINOIS
DEPARTMENT OF TRANSPORTATION

I-80 MAINTENANCE OF TRAFFIC
CONTRACT 62R27 (FOR INFORMATION ONLY)

SCALE: N.T.S. | SHEET OF SHEETS | STA. | TO STA.

F.A.I. RTE.	SECTION	COUNTY	TOTAL SHEETS	SHEET NO.
80	FAI 80 21 VLS	VARIOUS	553	99
		CONTRACT NO. 62R19		
		ILLINOIS	FED. AID PROJECT	

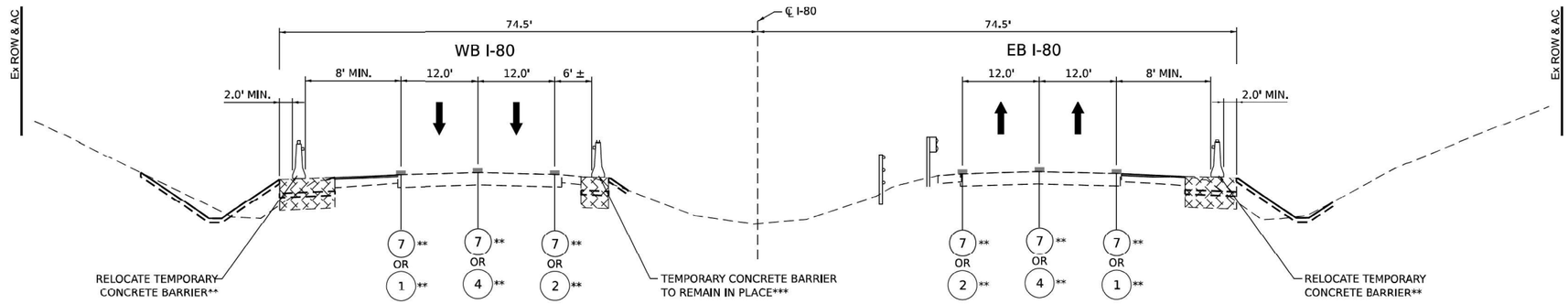

TYPICAL SECTION - WINTER STAGE - POST-PRESTAGE

THIS TYPICAL SECTION IS INTENDED TO SHOW THE TRAFFIC PATTERN AND WIDTHS DURING WINTER STAGES.

**PROVISIONAL QUANTITIES HAVE BEEN ADDED FOR STRIPING AND TEMPORARY CONCRETE BARRIER RELOCATION FOR WINTER STAGES.
***SEE PRESTAGE TYPICAL SECTIONS AND PLAN VIEW FOR LIMITS OF TEMPORARY PAVEMENT (INSIDE AND OUTSIDE SHOULDERS), SHOULDER RESURFACING, AND TEMPORARY CONCRETE BARRIER TO BE PLACED IN THE PRESTAGES.

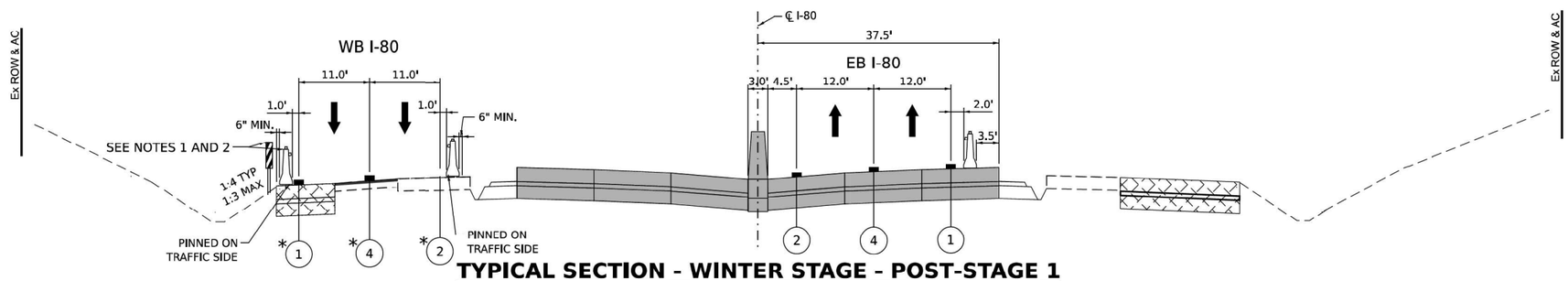

TYPICAL SECTION - WINTER STAGE - POST-STAGE 1

STA 410+00 TO 485+00

NOTES

1. USE VERTICAL PANELS FOR ALL 1:4 AND FLATTER SIDE SLOPES
2. USE TEMPORARY CONCRETE BARRIER FOR ALL 1:3 AND STEEPER SIDE SLOPES

LEGEND

- WORK ZONE
- TEMPORARY PAVEMENT
- TEMPORARY PAVEMENT FROM PREVIOUS STAGE
- COMPLETED PERMANENT PAVEMENT
- DIRECTION OF TRAVEL FLOW
- TEMPORARY CONCRETE BARRIER
- TYPE II BARRICADES OR DRUMS
- VERTICAL PANEL
- (1) TEMP PVT MK L4 EPOXY (SOLID WHITE)
- (2) TEMP PVT MK L4 EPOXY (SOLID YELLOW)
- (3) TEMP PVT MK L4 EPOXY (2' DASH 6' SKIP, WHITE)
- (4) TEMP PVT MK L5 EPOXY (10' DASH 30' SKIP, WHITE)
- (5) TEMP PVT MK L8 EPOXY (SOLID WHITE)
- (6) TEMP PVT MK L8 EPOXY (3' DASH 9' SKIP, WHITE)
- (7) EXISTING PAVEMENT MARKING
- (8) TEMP SOIL RETEN SYSTM
- * FROM PREVIOUS STAGE TO REMAIN

MODEL: Default
FILE NAME: pw://transystems-pw.bentley.com:transyscorp-pw1-hosted/Documents/Projects_2018/CH401/401180022/02-TransSystems/CAD/62R27/Sheets/09-MOT/D162r27-SHT-MOT-TYP-WIN-01.dgn

AECOM
303 EAST WACKER DRIVE, SUITE 1400
CHICAGO, IL 60601-5276
PHONE: (312) 373-7700 FAX: (312) 373-6600

USER NAME = amkluver	DESIGNED - NWM	REVISED -	
	DRAWN - PP	REVISED -	
PLOT SCALE = 20.000 ' / in.	CHECKED - SPF	REVISED -	
PLOT DATE = 6/23/2023	DATE -	REVISED -	

STATE OF ILLINOIS
DEPARTMENT OF TRANSPORTATION

SUGGESTED STAGES OF CONSTRUCTION AND TRAFFIC CONTROL PLAN
TYPICAL SECTIONS – WINTER STAGE

SCALE: | SHEET 1 OF 2 SHEETS | STA. TO STA.

F.A.I. RTE.	SECTION	COUNTY	TOTAL SHEETS	SHEET NO.
I-80	FAI 80 21 STRUCTURE 6	WILL	898	127
		CONTRACT NO. 62R27		
		ILLINOIS	FED. AID PROJECT	

MODEL: 2D SHEET H
FILE NAME: C:\TRANSYSTEMS\PW_LOCAL\TRANSYSTEMS-PW-01\DMS31452\62R19-SHT-62R27-STAGING-16.DGN

exp.

USER NAME = SALASL	DESIGNED -	REVISED -	
	DRAWN -	REVISED -	
PLOT SCALE = 0.16666667 ' / IN.	CHECKED -	REVISED -	
PLOT DATE = 10/14/2025	DATE - 8/22/2025	REVISED -	

STATE OF ILLINOIS
DEPARTMENT OF TRANSPORTATION

I-80 MAINTENANCE OF TRAFFIC
CONTRACT 62R27 (FOR INFORMATION ONLY)

SCALE: N.T.S. | SHEET OF SHEETS | STA. TO STA.

F.A.I. RTE.	SECTION	COUNTY	TOTAL SHEETS	SHEET NO.
80	FAI 80 21 VLS	VARIOUS	553	100
		CONTRACT NO. 62R19		
		ILLINOIS	FED. AID PROJECT	