LOCATION ID: CAB 47

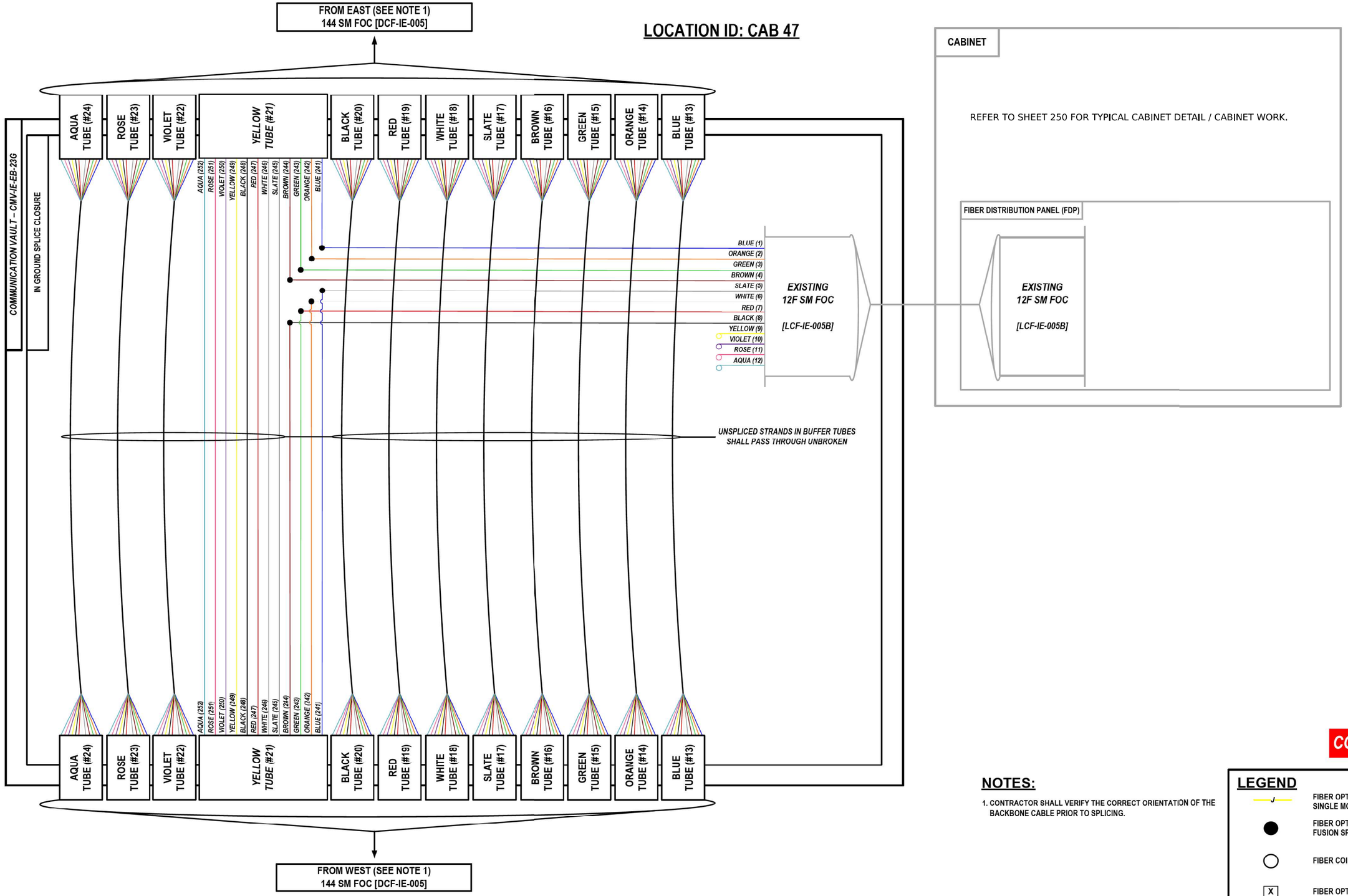

COLOR PLOT

NOTES:

1. CONTRACTOR SHALL VERIFY THE CORRECT ORIENTATION OF THE BACKBONE CABLE PRIOR TO SPLICING.

LEGEND

- FIBER OPTIC JUMPER, SINGLE MODE
- FIBER OPTIC FUSION SPLICE
- FIBER COIL
- X FIBER OPTIC TERMINATION

MODEL: 2D SHEET H
FILE NAME: C:\TRANSYSTEMS\PW_LOCAL\TRANSYSTEMS-PW-01\DMS32656\62R19-SHT-ITS-SPLICE-63.DGN

ATLAS TECHNICAL CONSULTANTS, LLC
100 S. WACKER DRIVE, SUITE 400
CHICAGO, IL 60606

USER NAME = SALASL	DESIGNED - JAM	REVISED -	
	DRAWN - AJW	REVISED -	
PLOT SCALE = 0.16666667 ' / IN.	CHECKED - DJM	REVISED -	
PLOT DATE = 11/12/2025	DATE - 11/12/2025	REVISED -	

STATE OF ILLINOIS
DEPARTMENT OF TRANSPORTATION

I–80
SPLICE DETAILS

SCALE: N.T.S. | SHEET OF SHEETS | STA. TO STA.

F.A.I. RTE.	SECTION	COUNTY	TOTAL SHEETS	SHEET NO.
80	FAI 80 21 VLS	VARIOUS	467	401
		CONTRACT NO. 62R19		
	ILLINOIS	FED. AID PROJECT		

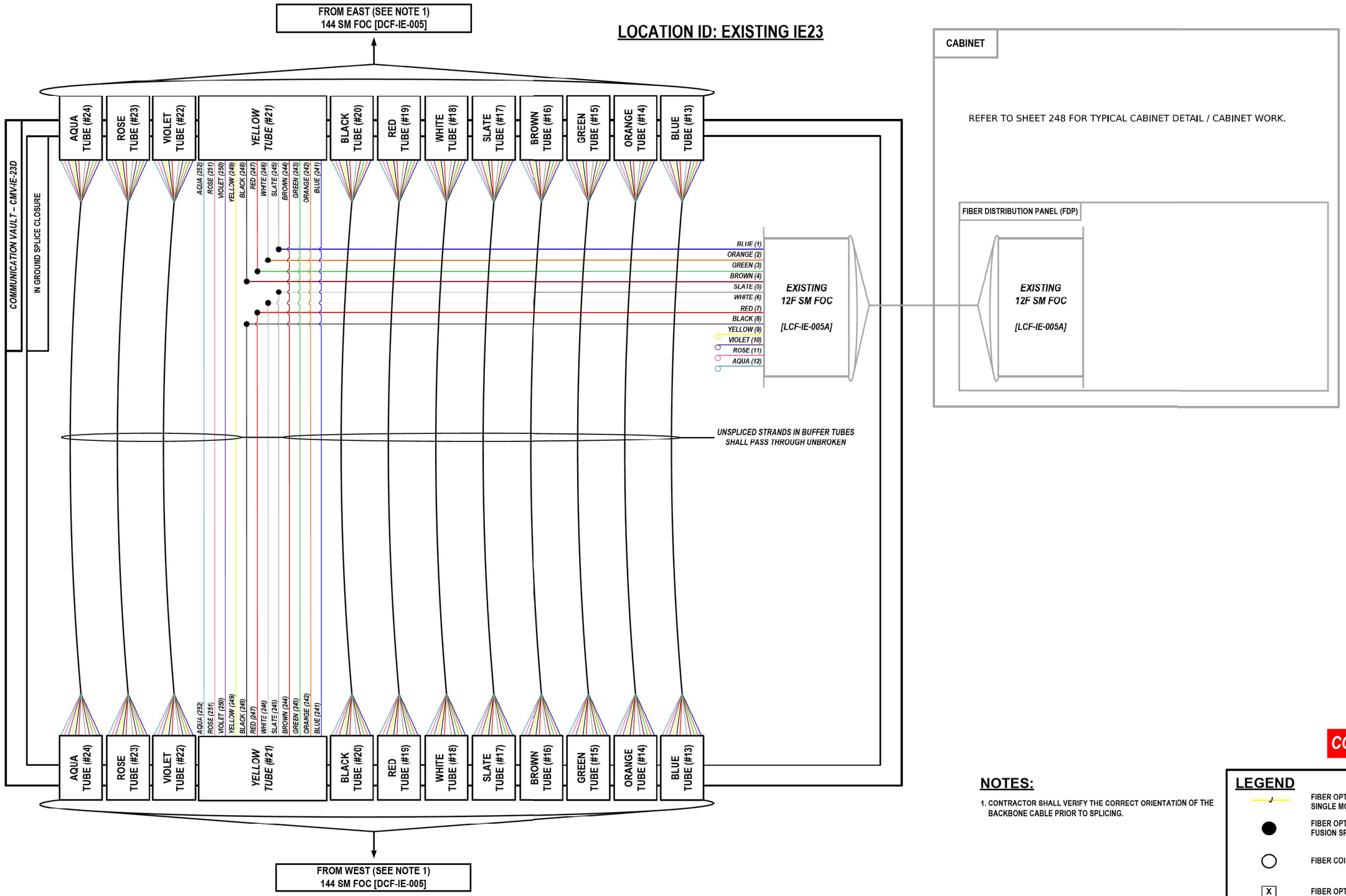

COLOR PLOT

NOTES:

1. CONTRACTOR SHALL VERIFY THE CORRECT ORIENTATION OF THE BACKBONE CABLE PRIOR TO SPLICING.

LEGEND

- FIBER OPTIC JUMPER, SINGLE MODE
- FIBER OPTIC FUSION SPLICE
- FIBER COIL
- X FIBER OPTIC TERMINATION

MODEL: 2D SHEET H
FILE NAME: C:\TRANSYSTEMS\PW_LOCAL\TRANSYSTEMS-PW-01\DMS32656\62R19-SHT-ITS-SPLICE-E4.DGN

ATLAS TECHNICAL CONSULTANTS, LLC
100 S. WACKER DRIVE, SUITE 400
CHICAGO, IL 60606

USER NAME = SALASL	DESIGNED - JAM	REVISED -	
	DRAWN - AJW	REVISED -	
PLOT SCALE = 0.16666667 ' / IN.	CHECKED - DJM	REVISED -	
PLOT DATE = 11/12/2025	DATE - 11/12/2025	REVISED -	

STATE OF ILLINOIS
DEPARTMENT OF TRANSPORTATION

I–80
SPLICE DETAILS

SCALE: N.T.S. | SHEET OF SHEETS | STA. TO STA.

F.A.I. RTE.	SECTION	COUNTY	TOTAL SHEETS	SHEET NO.
80	FAI 80 21 VLS	VARIOUS	467	402
		CONTRACT NO. 62R19		
	ILLINOIS	FED. AID PROJECT		

DETAIL ID: MAINLINE SPLICE DETAIL-1

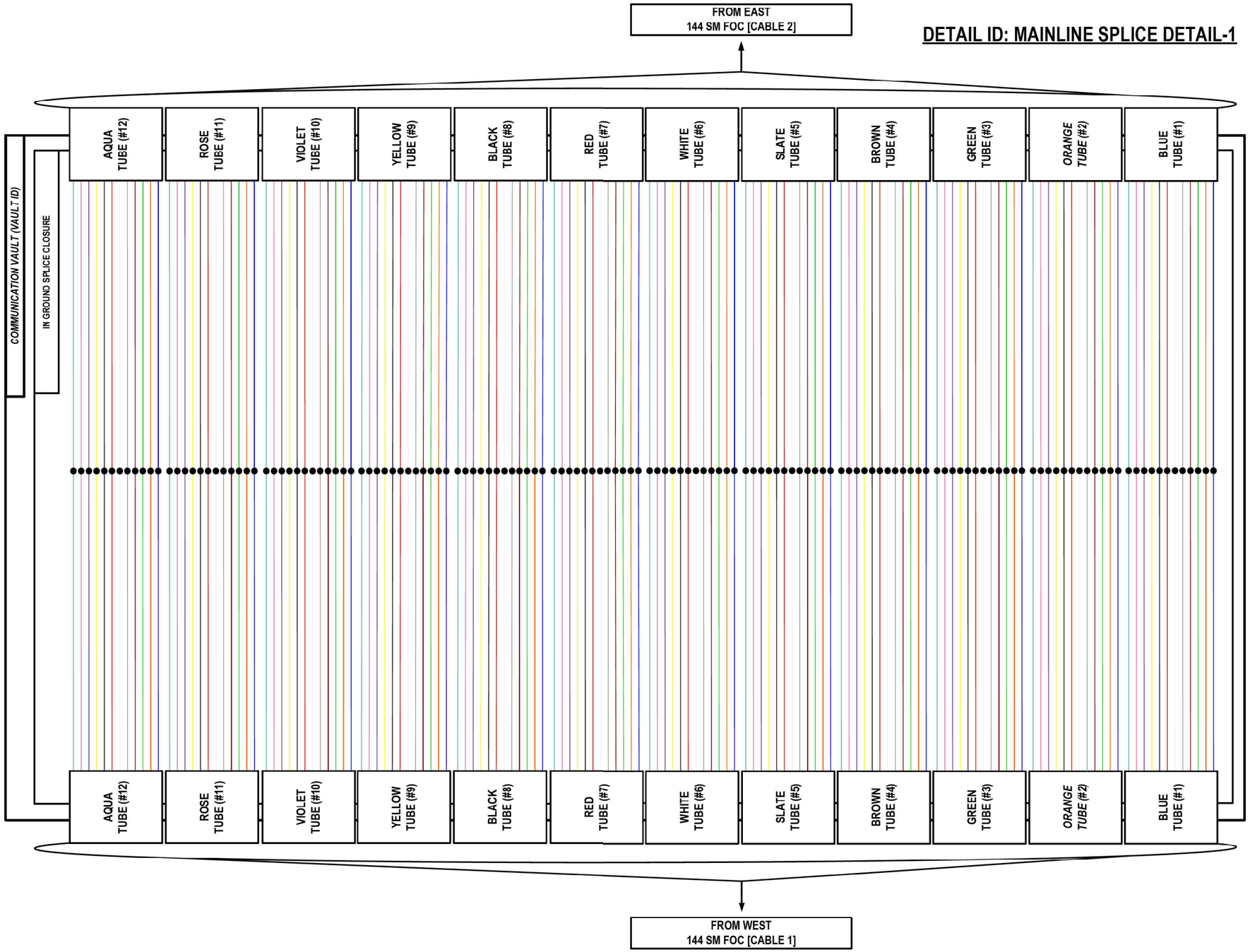

VAULT ID	CABLE 1	CABLE 2
CMV-IE-EB-34B	TCF-IE-EB-010	TCF-IE-EB-009
CMV-IE-WB-34B	TCF-IE-WB-010	TCF-IE-WB-009
CMV-IE-EB-30E	TCF-IE-WB-007	TCF-IE-EB-007
CMV-IE-WB-34B	DCF-IE-WB-010	DCF-IE-WB-009
CMV-IE-EB-34B	DCF-IE-EB-010	DCF-IE-EB-009
CMV-IE-EB-30E	DCF-IE-EB-007	DCF-IE-WB-007
CMV-IE-TP-36A	TCF-IE-TP-004	TCF-IE-TB-003

COLOR PLOT

LEGEND

- FIBER OPTIC JUMPER, SINGLE MODE
- FIBER OPTIC FUSION SPLICE
- FIBER COIL
- FIBER OPTIC TERMINATION

MODEL: 2D SHEET H
FILE NAME: C:\TRANSYSTEMS\PW_LOCAL\TRANSYSTEMS-PW-01\DMS32656\62R19-SHT-ITS-SPLICE-65.DGN

ATLAS TECHNICAL CONSULTANTS, LLC
100 S. WACKER DRIVE, SUITE 400
CHICAGO, IL 60606

USER NAME = SALASL	DESIGNED - JAM	REVISED -	
	DRAWN - AJW	REVISED -	
PLOT SCALE = 0.16666667 ' / IN.	CHECKED - DJM	REVISED -	
PLOT DATE = 11/12/2025	DATE - 11/12/2025	REVISED -	

STATE OF ILLINOIS
DEPARTMENT OF TRANSPORTATION

I-80
SPLICE DETAILS

SCALE: N.T.S. | SHEET OF SHEETS | STA. TO STA.

F.A.I. RTE.	SECTION	COUNTY	TOTAL SHEETS	SHEET NO.
80	FAI 80 21 VLS	VARIOUS	467	403
		CONTRACT NO. 62R19		
		ILLINOIS	FED. AID PROJECT	

DETAIL ID: MAINLINE SPLICE DETAIL-2

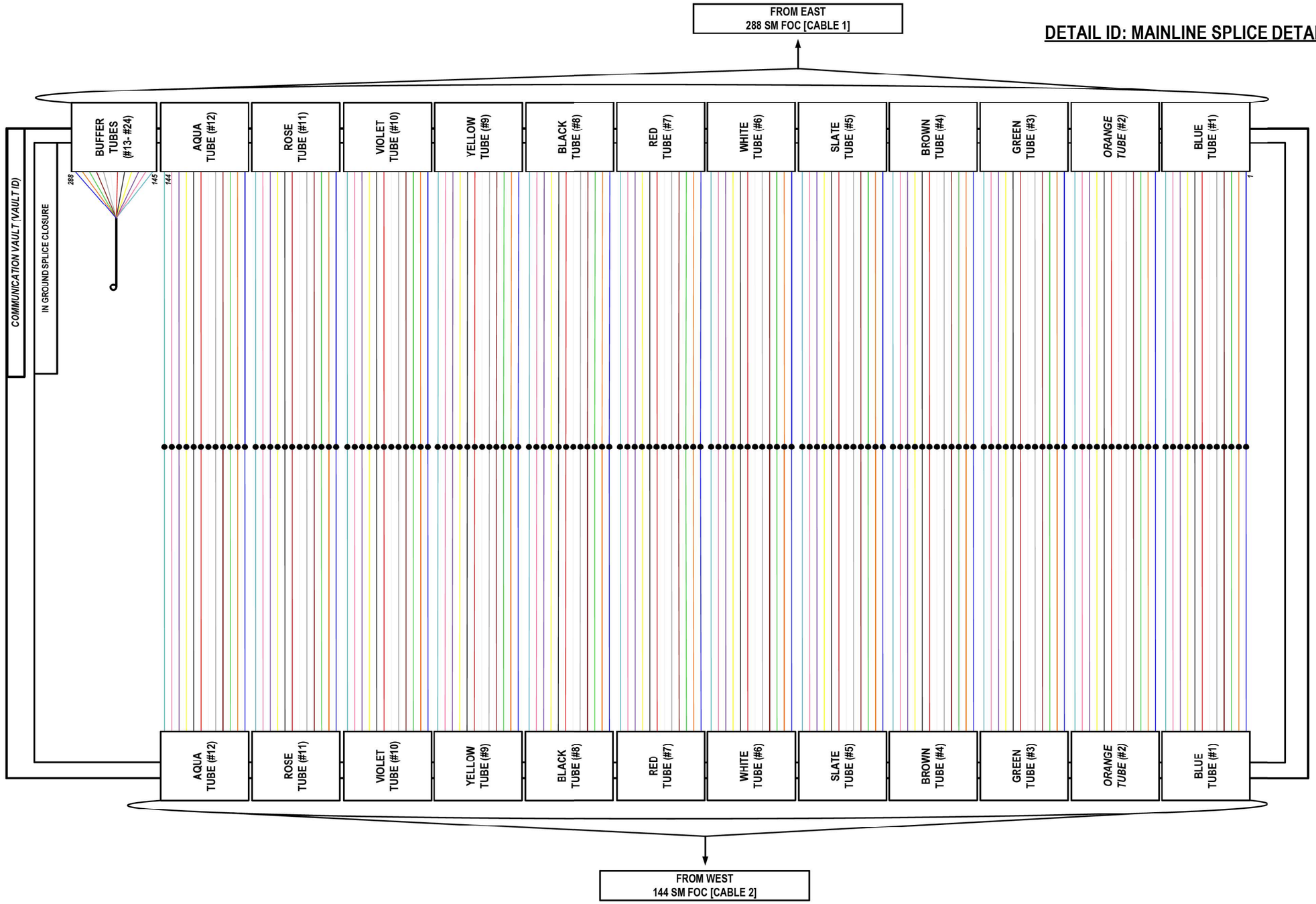

VAULT ID	CABLE 1	CABLE 2
CMV-IE-WB-26D	TCF-IE-006	TCF-IE-WB-007
CMV-IE-WB-26D	DCF-IE-006	DCF-IE-WB-007

COLOR PLOT

LEGEND

- FIBER OPTIC JUMPER, SINGLE MODE
- FIBER OPTIC FUSION SPLICE
- FIBER COIL
- X FIBER OPTIC TERMINATION

MODE: 2D SHEET H
FILE NAME: C:\TRANSYSTEMS\PW_LOCAL\TRANSYSTEMS-PW-01\DMS32656\62R19-SHT-ITS-SPLICE-66.DGN

ATLAS
ATLAS TECHNICAL CONSULTANTS, LLC
100 S. WACKER DRIVE, SUITE 400
CHICAGO, IL 60606

USER NAME = SALASL	DESIGNED - JAM	REVISED -	
	DRAWN - AJW	REVISED -	
PLOT SCALE = 0.16666667 ' / IN.	CHECKED - DJM	REVISED -	
PLOT DATE = 11/12/2025	DATE - 11/12/2025	REVISED -	

STATE OF ILLINOIS
DEPARTMENT OF TRANSPORTATION

I-80
SPLICE DETAILS

SCALE: N.T.S. | SHEET OF SHEETS | STA. TO STA.

F.A.I. RTE.	SECTION	COUNTY	TOTAL SHEETS	SHEET NO.
80	FAI 80 21 VLS	VARIOUS	467	404
		CONTRACT NO. 62R19		
	ILLINOIS	FED. AID PROJECT		

DETAIL ID: MAINLINE SPLICE DETAIL-3

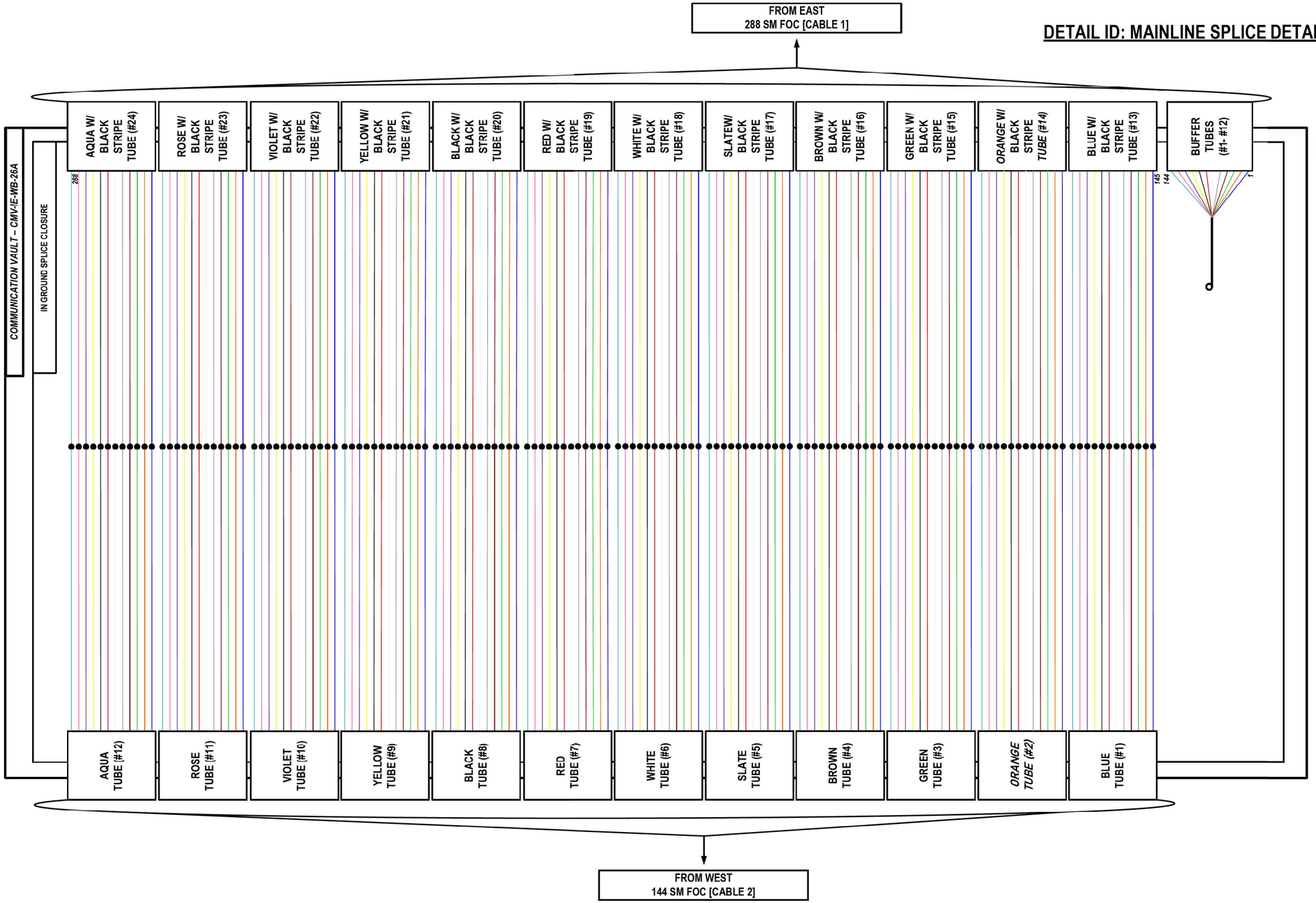

VAULT ID	CABLE 1	CABLE 2
CMV-IE-WB-26A	TCF-IE-006	TCF-IE-WB-007
CMV-IE-WB-26A	DCF-IE-006	DCF-IE-WB-007

COLOR PLOT

LEGEND

- FIBER OPTIC JUMPER, SINGLE MODE
- FIBER OPTIC FUSION SPLICE
- FIBER COIL
- X FIBER OPTIC TERMINATION

MODEL: 2D SHEET H
FILE NAME: C:\TRANSYSTEMS\PW_LOCAL\TRANSYSTEMS-PW-01\DMS32656\62R19-SHT-ITS-SPLICE-67.DGN

ATLAS TECHNICAL CONSULTANTS, LLC
100 S. WACKER DRIVE, SUITE 400
CHICAGO, IL 60606

USER NAME = SALASL	DESIGNED - JAM	REVISED -	
	DRAWN - AJW	REVISED -	
PLOT SCALE = 0.16666667 ' / IN.	CHECKED - DJM	REVISED -	
PLOT DATE = 11/12/2025	DATE - 11/12/2025	REVISED -	

STATE OF ILLINOIS
DEPARTMENT OF TRANSPORTATION

I–80
SPLICE DETAILS

SCALE: N.T.S. | SHEET OF SHEETS | STA. TO STA.

F.A.I. RTE.	SECTION	COUNTY	TOTAL SHEETS	SHEET NO.
80	FAI 80 21 VLS	VARIOUS	467	405

CONTRACT NO. 62R19

ILLINOIS | FED. AID PROJECT

DETAIL ID: MAINLINE SPLICE DETAIL-4

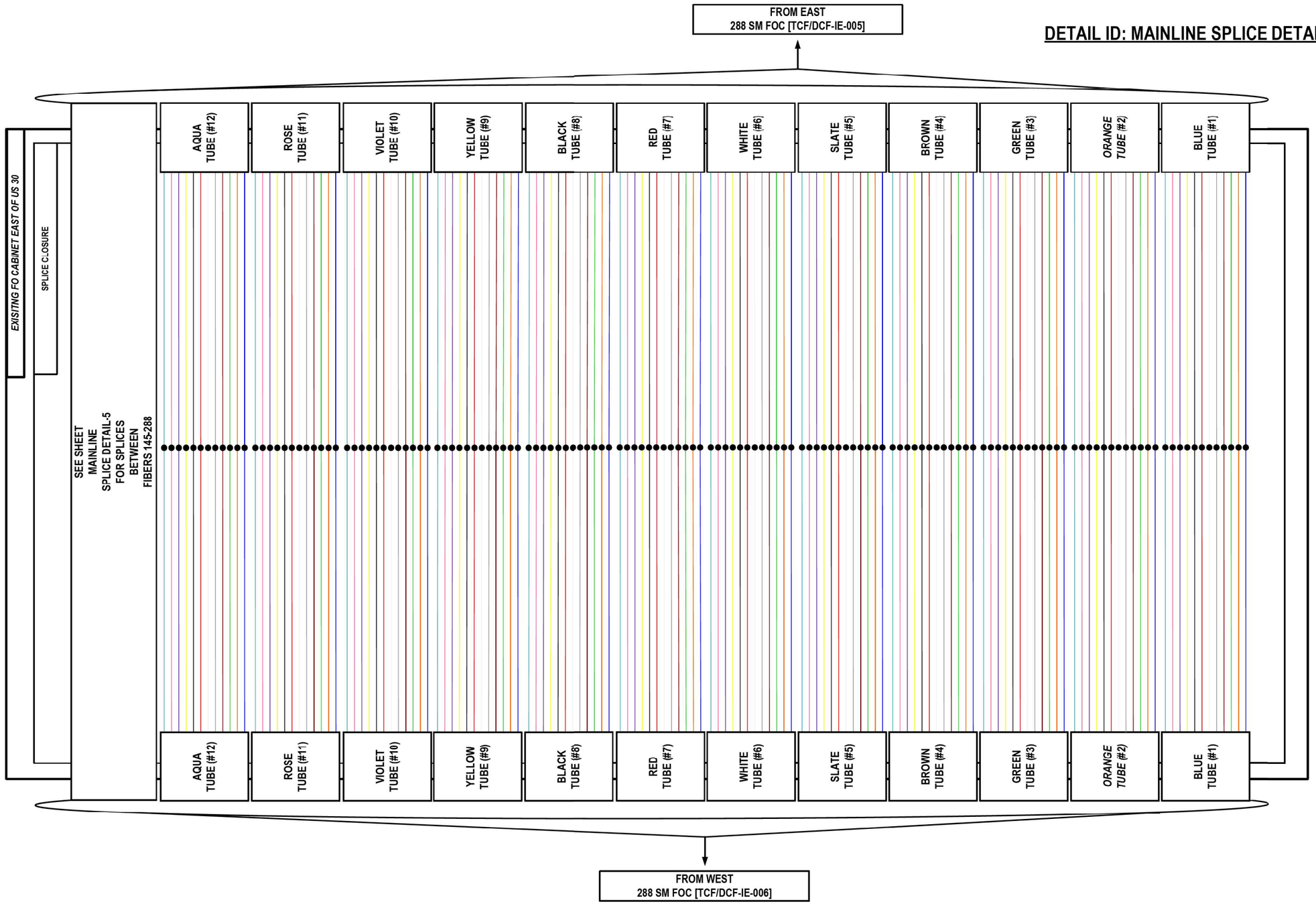

COLOR PLOT

LEGEND

- FIBER OPTIC JUMPER, SINGLE MODE
- FIBER OPTIC FUSION SPLICE
- FIBER COIL
- X — FIBER OPTIC TERMINATION

MODEL: 2D SHEET H
FILE NAME: C:\TRANSYSTEMS\PW_LOCAL\TRANSYSTEMS-PW-01\DMS32656\62R19-SHT-ITS-SPLICE-48.DGN

ATLAS TECHNICAL CONSULTANTS, LLC
100 S. WACKER DRIVE, SUITE 400
CHICAGO, IL 60606

USER NAME = SALASL	DESIGNED - JAM	REVISED -	
	DRAWN - AJW	REVISED -	
PLOT SCALE = 0.16666667 ' / IN.	CHECKED - DJM	REVISED -	
PLOT DATE = 11/12/2025	DATE - 11/12/2025	REVISED -	

STATE OF ILLINOIS
DEPARTMENT OF TRANSPORTATION

I-80
SPLICE DETAILS

SCALE: N.T.S. | SHEET OF SHEETS | STA. TO STA.

F.A.I. RTE.	SECTION	COUNTY	TOTAL SHEETS	SHEET NO.
80	FAI 80 21 VLS	VARIOUS	467	406

CONTRACT NO. 62R19

ILLINOIS FED. AID PROJECT

DETAIL ID: MAINLINE SPLICE DETAIL-5

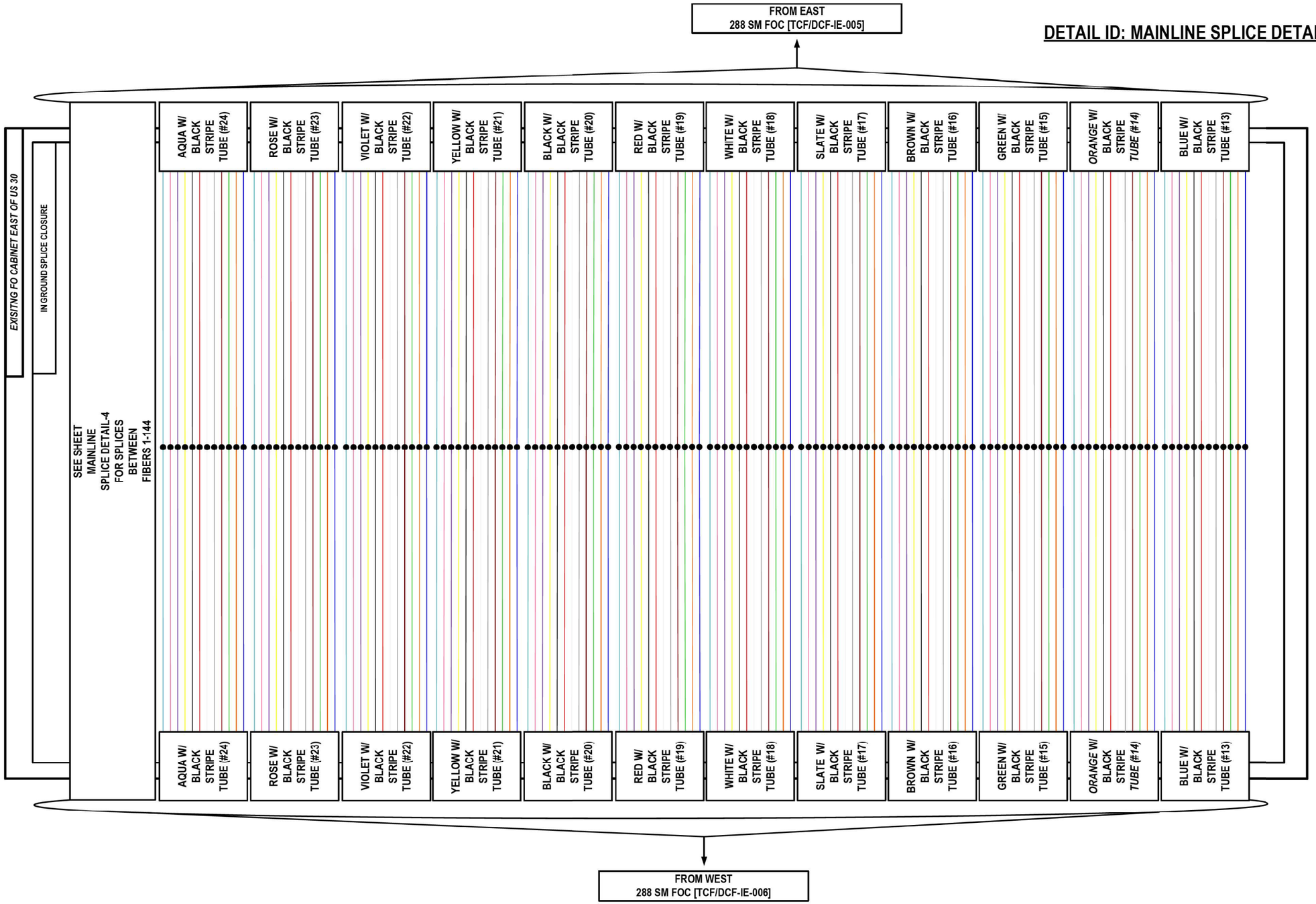

COLOR PLOT

LEGEND

- FIBER OPTIC JUMPER, SINGLE MODE
- FIBER OPTIC FUSION SPLICE
- FIBER COIL
- X — FIBER OPTIC TERMINATION

MODEL: 2D SHEET H
FILE NAME: C:\TRANSYSTEMS\PW_LOCAL\TRANSYSTEMS-PW-01\DMS32656\62R19-SHT-ITS-SPLICE-69.DGN

ATLAS TECHNICAL CONSULTANTS, LLC
100 S. WACKER DRIVE, SUITE 400
CHICAGO, IL 60606

USER NAME = SALASL	DESIGNED - JAM	REVISED -	
	DRAWN - AJW	REVISED -	
PLOT SCALE = 0.16666667 ' / IN.	CHECKED - DJM	REVISED -	
PLOT DATE = 11/12/2025	DATE - 11/12/2025	REVISED -	

STATE OF ILLINOIS
DEPARTMENT OF TRANSPORTATION

I-80
SPLICE DETAILS

SCALE: N.T.S. | SHEET OF SHEETS | STA. TO STA.

F.A.I. RTE.	SECTION	COUNTY	TOTAL SHEETS	SHEET NO.
80	FAI 80 21 VLS	VARIOUS	467	407

CONTRACT NO. 62R19

ILLINOIS | FED. AID PROJECT

TRUNK CABLE FIBER ASSIGNMENTS								ORIGINATION	FO INTERCONNECT CABINET, STA 205+08			
TRUNK CABLE DESIGNATION			TCF-IE-WB-013					DESTINATION	CMV-IE-WB-40B			
BUFFER TUBE	FIBER	FIBER NO	ASSIGNMENT	BUFFER TUBE	FIBER NO	FIBER NO	ASSIGNMENT		BUFFER TUBE	FIBER	FIBER NO	ASSIGNMENT
BLUE	Blue 1	1	-	SLATE	Blue 1	49	-		YELLOW	Blue 1	·	-
	Orange 2	2	-		Orange 2	50	-			Orange 2	·	-
	Green 3	3	-		Green 3	51	-			Green 3	·	-
	Brown 4	4	-		Brown 4	52	-			Brown 4	·	-
	Slate 5	5	-		Slate 5	53	-			Slate 5	·	-
	White 6	6	-		White 6	54	-			White 6	·	-
	Red 7	7	-		Red 7	55	-			Red 7	·	-
	Black 8	8	-		Black 8	56	-			Black 8	·	-
	Yellow 9	9	-		Yellow 9	57	-			Yellow 9	·	-
	Violet 10	10	-		Violet 10	58	-			Violet 10	·	-
	Rose 11	11	-		Rose 11	59	-			Rose 11	·	-
	Aqua 12	12	-		Aqua 12	60	-			Aqua 12	·	-
ORANGE	Blue 1	13	-	WHITE	Blue 1	61	-		VIOLET	Blue 1	·	-
	Orange 2	14	-		Orange 2	62	-			Orange 2	·	-
	Green 3	15	-		Green 3	63	-			Green 3	·	-
	Brown 4	16	-		Brown 4	64	-			Brown 4	·	-
	Slate 5	17	-		Slate 5	65	-			Slate 5	·	-
	White 6	18	-		White 6	66	-			White 6	·	-
	Red 7	19	-		Red 7	67	-			Red 7	·	-
	Black 8	20	-		Black 8	68	-			Black 8	·	-
	Yellow 9	21	-		Yellow 9	69	-			Yellow 9	·	-
	Violet 10	22	-		Violet 10	70	-			Violet 10	·	-
	Rose 11	23	-		Rose 11	71	-			Rose 11	·	-
	Aqua 12	24	-		Aqua 12	72	-			Aqua 12	·	-
GREEN	Blue 1	25	-	RED	Blue 1	73	-		ROSE	Blue 1	·	-
	Orange 2	26	-		Orange 2	74	-			Orange 2	·	-
	Green 3	27	-		Green 3	75	-			Green 3	·	-
	Brown 4	28	-		Brown 4	76	-			Brown 4	·	-
	Slate 5	29	-		Slate 5	77	-			Slate 5	·	-
	White 6	30	-		White 6	78	-			White 6	·	-
	Red 7	31	-		Red 7	79	-			Red 7	·	-
	Black 8	32	-		Black 8	80	-			Black 8	·	-
	Yellow 9	33	-		Yellow 9	81	-			Yellow 9	·	-
	Violet 10	34	-		Violet 10	82	-			Violet 10	·	-
	Rose 11	35	-		Rose 11	83	-			Rose 11	·	-
	Aqua 12	36	-		Aqua 12	84	-			Aqua 12	·	-
BROWN	Blue 1	37	-	BLACK	Blue 1	85	-		AQUA	Blue 1	·	-
	Orange 2	38	-		Orange 2	86	-			Orange 2	·	-
	Green 3	39	-		Green 3	87	-			Green 3	·	-
	Brown 4	40	-		Brown 4	88	-			Brown 4	·	-
	Slate 5	41	-		Slate 5	89	-			Slate 5	·	-
	White 6	42	-		White 6	90	-			White 6	·	-
	Red 7	43	-		Red 7	91	-			Red 7	·	-
	Black 8	44	-		Black 8	92	-			Black 8	·	-
	Yellow 9	45	-		Yellow 9	93	-			Yellow 9	·	-
	Violet 10	46	-		Violet 10	94	-			Violet 10	·	-
	Rose 11	47	-		Rose 11	95	-			Rose 11	·	-
	Aqua 12	48	-		Aqua 12	96	-			Aqua 12	·	-

MODEL: 2D SHEET H
FILE NAME: C:\TRANSYSTEMS\PW_LOCAL\TRANSYSTEMS-PW-01\DMS32656\62R13-SHT-ITS-FIBER-01.DGN

ATLAS TECHNICAL CONSULTANTS, LLC
100 S. WACKER DRIVE, SUITE 400
CHICAGO, IL 60606

USER NAME = SALASL	DESIGNED - JAM	REVISED -	
	DRAWN - JAM	REVISED -	
PLOT SCALE = 0.16666667 ' / IN.	CHECKED - DJM	REVISED -	
PLOT DATE = 11/12/2025	DATE - 11/12/2025	REVISED -	

STATE OF ILLINOIS
DEPARTMENT OF TRANSPORTATION

I-80
TRUNK FIBER ASSIGNMENTS

SCALE: NONE | SHEET OF SHEETS | STA. TO STA.

F.A.I. RTE.	SECTION	COUNTY	TOTAL SHEETS	SHEET NO.
80	FAI 80 21 VLS	VARIOUS	467	408
		CONTRACT NO. 62R19		
	ILLINOIS	FED. AID PROJECT		

TRUNK CABLE FIBER ASSIGNMENTS								ORIGINATION	FO INTERCONNECT CABINET, STA 205+08			
TRUNK CABLE DESIGNATION			TCF-IE-EB-013					DESTINATION	CMV-IE-EB-40C			
BUFFER TUBE	FIBER	FIBER NO	ASSIGNMENT	BUFFER TUBE	FIBER NO	FIBER NO	ASSIGNMENT		BUFFER TUBE	FIBER	FIBER NO	ASSIGNMENT
BLUE	Blue 1	1	-	SLATE	Blue 1	49	-		YELLOW	Blue 1	·	-
	Orange 2	2	-		Orange 2	50	-			Orange 2	·	-
	Green 3	3	-		Green 3	51	-			Green 3	·	-
	Brown 4	4	-		Brown 4	52	-			Brown 4	·	-
	Slate 5	5	-		Slate 5	53	-			Slate 5	·	-
	White 6	6	-		White 6	54	-			White 6	·	-
	Red 7	7	-		Red 7	55	-			Red 7	·	-
	Black 8	8	-		Black 8	56	-			Black 8	·	-
	Yellow 9	9	-		Yellow 9	57	-			Yellow 9	·	-
	Violet 10	10	-		Violet 10	58	-			Violet 10	·	-
	Rose 11	11	-		Rose 11	59	-			Rose 11	·	-
	Aqua 12	12	-		Aqua 12	60	-			Aqua 12	·	-
ORANGE	Blue 1	13	-	WHITE	Blue 1	61	-		VIOLET	Blue 1	·	-
	Orange 2	14	-		Orange 2	62	-			Orange 2	·	-
	Green 3	15	-		Green 3	63	-			Green 3	·	-
	Brown 4	16	-		Brown 4	64	-			Brown 4	·	-
	Slate 5	17	-		Slate 5	65	-			Slate 5	·	-
	White 6	18	-		White 6	66	-			White 6	·	-
	Red 7	19	-		Red 7	67	-			Red 7	·	-
	Black 8	20	-		Black 8	68	-			Black 8	·	-
	Yellow 9	21	-		Yellow 9	69	-			Yellow 9	·	-
	Violet 10	22	-		Violet 10	70	-			Violet 10	·	-
	Rose 11	23	-		Rose 11	71	-			Rose 11	·	-
	Aqua 12	24	-		Aqua 12	72	-			Aqua 12	·	-
GREEN	Blue 1	25	-	RED	Blue 1	73	-		ROSE	Blue 1	·	-
	Orange 2	26	-		Orange 2	74	-			Orange 2	·	-
	Green 3	27	-		Green 3	75	-			Green 3	·	-
	Brown 4	28	-		Brown 4	76	-			Brown 4	·	-
	Slate 5	29	-		Slate 5	77	-			Slate 5	·	-
	White 6	30	-		White 6	78	-			White 6	·	-
	Red 7	31	-		Red 7	79	-			Red 7	·	-
	Black 8	32	-		Black 8	80	-			Black 8	·	-
	Yellow 9	33	-		Yellow 9	81	-			Yellow 9	·	-
	Violet 10	34	-		Violet 10	82	-			Violet 10	·	-
	Rose 11	35	-		Rose 11	83	-			Rose 11	·	-
	Aqua 12	36	-		Aqua 12	84	-			Aqua 12	·	-
BROWN	Blue 1	37	-	BLACK	Blue 1	85	-		AQUA	Blue 1	·	-
	Orange 2	38	-		Orange 2	86	-			Orange 2	·	-
	Green 3	39	-		Green 3	87	-			Green 3	·	-
	Brown 4	40	-		Brown 4	88	-			Brown 4	·	-
	Slate 5	41	-		Slate 5	89	-			Slate 5	·	-
	White 6	42	-		White 6	90	-			White 6	·	-
	Red 7	43	-		Red 7	91	-			Red 7	·	-
	Black 8	44	-		Black 8	92	-			Black 8	·	-
	Yellow 9	45	-		Yellow 9	93	-			Yellow 9	·	-
	Violet 10	46	-		Violet 10	94	-			Violet 10	·	-
	Rose 11	47	-		Rose 11	95	-			Rose 11	·	-
	Aqua 12	48	-		Aqua 12	96	-			Aqua 12	·	-

MODEL: 2D SHEET H
FILE NAME: C:\TRANSYSTEMS\PW_LOCAL\TRANSYSTEMS-PW-01\DMS32656\62R13-SHT-ITS-FIBER-02.DGN

ATLAS TECHNICAL CONSULTANTS, LLC
100 S. WACKER DRIVE, SUITE 400
CHICAGO, IL 60606

USER NAME = SALASL	DESIGNED - JAM	REVISED -	
	DRAWN - JAM	REVISED -	
PLOT SCALE = 0.16666667 ' / IN.	CHECKED - DJM	REVISED -	
PLOT DATE = 11/12/2025	DATE - 11/12/2025	REVISED -	

STATE OF ILLINOIS
DEPARTMENT OF TRANSPORTATION

I-80
TRUNK FIBER ASSIGNMENTS

SCALE: NONE | SHEET OF SHEETS | STA. TO STA.

F.A.I. RTE.	SECTION	COUNTY	TOTAL SHEETS	SHEET NO.
80	FAI 80 21 VLS	VARIOUS	467	409
		CONTRACT NO. 62R19		
	ILLINOIS	FED. AID PROJECT		

TRUNK CABLE FIBER ASSIGNMENTS								ORIGINATION	FO INTERCONNECT CABINET, STA 205+08			
TRUNK CABLE DESIGNATION			TCF-IE-WB-012					DESTINATION	PROPOSED I-80 COMMUNICATIONS HUT			
BUFFER TUBE	FIBER	FIBER NO	ASSIGNMENT	BUFFER TUBE	FIBER NO	FIBER NO	ASSIGNMENT		BUFFER TUBE	FIBER	FIBER NO	ASSIGNMENT
BLUE	Blue 1	1	-	SLATE	Blue 1	49	-		YELLOW	Blue 1	97	-
	Orange 2	2	-		Orange 2	50	-			Orange 2	98	-
	Green 3	3	-		Green 3	51	-			Green 3	99	-
	Brown 4	4	-		Brown 4	52	-			Brown 4	100	-
	Slate 5	5	-		Slate 5	53	-			Slate 5	101	-
	White 6	6	-		White 6	54	-			White 6	102	-
	Red 7	7	-		Red 7	55	-			Red 7	103	-
	Black 8	8	-		Black 8	56	-			Black 8	104	-
	Yellow 9	9	-		Yellow 9	57	-			Yellow 9	105	-
	Violet 10	10	-		Violet 10	58	-			Violet 10	106	-
	Rose 11	11	-		Rose 11	59	-			Rose 11	107	-
	Aqua 12	12	-		Aqua 12	60	-			Aqua 12	108	-
ORANGE	Blue 1	13	-	WHITE	Blue 1	61	-		VIOLET	Blue 1	109	-
	Orange 2	14	-		Orange 2	62	-			Orange 2	110	-
	Green 3	15	-		Green 3	63	-			Green 3	111	-
	Brown 4	16	-		Brown 4	64	-			Brown 4	112	-
	Slate 5	17	-		Slate 5	65	-			Slate 5	113	-
	White 6	18	-		White 6	66	-			White 6	114	-
	Red 7	19	-		Red 7	67	-			Red 7	115	-
	Black 8	20	-		Black 8	68	-			Black 8	116	-
	Yellow 9	21	-		Yellow 9	69	-			Yellow 9	117	-
	Violet 10	22	-		Violet 10	70	-			Violet 10	118	-
	Rose 11	23	-		Rose 11	71	-			Rose 11	119	-
	Aqua 12	24	-		Aqua 12	72	-			Aqua 12	120	-
GREEN	Blue 1	25	-	RED	Blue 1	73	-		ROSE	Blue 1	121	-
	Orange 2	26	-		Orange 2	74	-			Orange 2	122	-
	Green 3	27	-		Green 3	75	-			Green 3	123	-
	Brown 4	28	-		Brown 4	76	-			Brown 4	124	-
	Slate 5	29	-		Slate 5	77	-			Slate 5	125	-
	White 6	30	-		White 6	78	-			White 6	126	-
	Red 7	31	-		Red 7	79	-			Red 7	127	-
	Black 8	32	-		Black 8	80	-			Black 8	128	-
	Yellow 9	33	-		Yellow 9	81	-			Yellow 9	129	-
	Violet 10	34	-		Violet 10	82	-			Violet 10	130	-
	Rose 11	35	-		Rose 11	83	-			Rose 11	131	-
	Aqua 12	36	-		Aqua 12	84	-			Aqua 12	132	-
BROWN	Blue 1	37	-	BLACK	Blue 1	85	-		AQUA	Blue 1	133	-
	Orange 2	38	-		Orange 2	86	-			Orange 2	134	-
	Green 3	39	-		Green 3	87	-			Green 3	135	-
	Brown 4	40	-		Brown 4	88	-			Brown 4	136	-
	Slate 5	41	-		Slate 5	89	-			Slate 5	137	-
	White 6	42	-		White 6	90	-			White 6	138	-
	Red 7	43	-		Red 7	91	-			Red 7	139	-
	Black 8	44	-		Black 8	92	-			Black 8	140	-
	Yellow 9	45	-		Yellow 9	93	-			Yellow 9	141	-
	Violet 10	46	-		Violet 10	94	-			Violet 10	142	-
	Rose 11	47	-		Rose 11	95	-			Rose 11	143	-
	Aqua 12	48	-		Aqua 12	96	-			Aqua 12	144	-

MODEL: 2D SHEET H
FILE NAME: C:\TRANSYSTEMS\PW_LOCALTRANSYSTEMS-PW-01\DMS32656\62R19-SHT-ITS-FIBER-03.DGN

ATLAS TECHNICAL CONSULTANTS, LLC
100 S. WACKER DRIVE, SUITE 400
CHICAGO, IL 60606

USER NAME = SALASL	DESIGNED - JAM	REVISED -	
	DRAWN - JAM	REVISED -	
PLOT SCALE = 0.16666667 ' / IN.	CHECKED - DJM	REVISED -	
PLOT DATE = 11/12/2025	DATE - 11/12/2025	REVISED -	

STATE OF ILLINOIS
DEPARTMENT OF TRANSPORTATION

I-80
TRUNK FIBER ASSIGNMENTS

SCALE: NONE | SHEET OF SHEETS | STA. TO STA.

F.A.I. RTE.	SECTION	COUNTY	TOTAL SHEETS	SHEET NO.
80	FAI 80 21 VLS	VARIOUS	467	410
		CONTRACT NO. 62R19		
	ILLINOIS	FED. AID PROJECT		

TRUNK CABLE FIBER ASSIGNMENTS								ORIGINATION	FO INTERCONNECT CABINET, STA 205+08			
TRUNK CABLE DESIGNATION			TCF-IE-EB-012					DESTINATION	PROPOSED I-80 COMMUNICATIONS HUT			
BUFFER TUBE	FIBER	FIBER NO	ASSIGNMENT	BUFFER TUBE	FIBER NO	FIBER NO	ASSIGNMENT		BUFFER TUBE	FIBER	FIBER NO	ASSIGNMENT
BLUE	Blue 1	1	-	SLATE	Blue 1	49	-		YELLOW	Blue 1	97	-
	Orange 2	2	-		Orange 2	50	-			Orange 2	98	-
	Green 3	3	-		Green 3	51	-			Green 3	99	-
	Brown 4	4	-		Brown 4	52	-			Brown 4	100	-
	Slate 5	5	-		Slate 5	53	-			Slate 5	101	-
	White 6	6	-		White 6	54	-			White 6	102	-
	Red 7	7	-		Red 7	55	-			Red 7	103	-
	Black 8	8	-		Black 8	56	-			Black 8	104	-
	Yellow 9	9	-		Yellow 9	57	-			Yellow 9	105	-
	Violet 10	10	-		Violet 10	58	-			Violet 10	106	-
	Rose 11	11	-		Rose 11	59	-			Rose 11	107	-
	Aqua 12	12	-		Aqua 12	60	-			Aqua 12	108	-
ORANGE	Blue 1	13	-	WHITE	Blue 1	61	-		VIOLET	Blue 1	109	-
	Orange 2	14	-		Orange 2	62	-			Orange 2	110	-
	Green 3	15	-		Green 3	63	-			Green 3	111	-
	Brown 4	16	-		Brown 4	64	-			Brown 4	112	-
	Slate 5	17	-		Slate 5	65	-			Slate 5	113	-
	White 6	18	-		White 6	66	-			White 6	114	-
	Red 7	19	-		Red 7	67	-			Red 7	115	-
	Black 8	20	-		Black 8	68	-			Black 8	116	-
	Yellow 9	21	-		Yellow 9	69	-			Yellow 9	117	-
	Violet 10	22	-		Violet 10	70	-			Violet 10	118	-
	Rose 11	23	-		Rose 11	71	-			Rose 11	119	-
	Aqua 12	24	-		Aqua 12	72	-			Aqua 12	120	-
GREEN	Blue 1	25	-	RED	Blue 1	73	-		ROSE	Blue 1	121	-
	Orange 2	26	-		Orange 2	74	-			Orange 2	122	-
	Green 3	27	-		Green 3	75	-			Green 3	123	-
	Brown 4	28	-		Brown 4	76	-			Brown 4	124	-
	Slate 5	29	-		Slate 5	77	-			Slate 5	125	-
	White 6	30	-		White 6	78	-			White 6	126	-
	Red 7	31	-		Red 7	79	-			Red 7	127	-
	Black 8	32	-		Black 8	80	-			Black 8	128	-
	Yellow 9	33	-		Yellow 9	81	-			Yellow 9	129	-
	Violet 10	34	-		Violet 10	82	-			Violet 10	130	-
	Rose 11	35	-		Rose 11	83	-			Rose 11	131	-
	Aqua 12	36	-		Aqua 12	84	-			Aqua 12	132	-
BROWN	Blue 1	37	-	BLACK	Blue 1	85	-		AQUA	Blue 1	133	-
	Orange 2	38	-		Orange 2	86	-			Orange 2	134	-
	Green 3	39	-		Green 3	87	-			Green 3	135	-
	Brown 4	40	-		Brown 4	88	-			Brown 4	136	-
	Slate 5	41	-		Slate 5	89	-			Slate 5	137	-
	White 6	42	-		White 6	90	-			White 6	138	-
	Red 7	43	-		Red 7	91	-			Red 7	139	-
	Black 8	44	-		Black 8	92	-			Black 8	140	-
	Yellow 9	45	-		Yellow 9	93	-			Yellow 9	141	-
	Violet 10	46	-		Violet 10	94	-			Violet 10	142	-
	Rose 11	47	-		Rose 11	95	-			Rose 11	143	-
	Aqua 12	48	-		Aqua 12	96	-			Aqua 12	144	-

MODEL: 2D SHEET H
FILE NAME: C:\TRANSYSTEMS\PW_LOCAL\TRANSYSTEMS-PW-01\DMS32656\62R13-SHT-ITS-FIBER-04.DGN

ATLAS TECHNICAL CONSULTANTS, LLC
100 S. WACKER DRIVE, SUITE 400
CHICAGO, IL 60606

USER NAME = SALASL	DESIGNED - JAM	REVISED -	
	DRAWN - JAM	REVISED -	
PLOT SCALE = 0.16666667 ' / IN.	CHECKED - DJM	REVISED -	
PLOT DATE = 11/12/2025	DATE - 11/12/2025	REVISED -	

STATE OF ILLINOIS
DEPARTMENT OF TRANSPORTATION

I-80
TRUNK FIBER ASSIGNMENTS

SCALE: NONE | SHEET OF SHEETS | STA. TO STA.

F.A.I. RTE.	SECTION	COUNTY	TOTAL SHEETS	SHEET NO.
80	FAI 80 21 VLS	VARIOUS	467	411
		CONTRACT NO. 62R19		
	ILLINOIS	FED. AID PROJECT		

TRUNK CABLE FIBER ASSIGNMENTS								ORIGINATION	PROPOSED I-80 COMMUNICATIONS HUT			
TRUNK CABLE DESIGNATION			TCF-IE-WB-011					DESTINATION	CMV-IE-WB-37C			
BUFFER TUBE	FIBER	FIBER NO	ASSIGNMENT	BUFFER TUBE	FIBER NO	FIBER NO	ASSIGNMENT		BUFFER TUBE	FIBER	FIBER NO	ASSIGNMENT
BLUE	Blue 1	1	-	SLATE	Blue 1	49	-		YELLOW	Blue 1	97	-
	Orange 2	2	-		Orange 2	50	-			Orange 2	98	-
	Green 3	3	-		Green 3	51	-			Green 3	99	-
	Brown 4	4	-		Brown 4	52	-			Brown 4	100	-
	Slate 5	5	-		Slate 5	53	-			Slate 5	101	-
	White 6	6	-		White 6	54	-			White 6	102	-
	Red 7	7	-		Red 7	55	-			Red 7	103	-
	Black 8	8	-		Black 8	56	-			Black 8	104	-
	Yellow 9	9	-		Yellow 9	57	-			Yellow 9	105	-
	Violet 10	10	-		Violet 10	58	-			Violet 10	106	-
	Rose 11	11	-		Rose 11	59	-			Rose 11	107	-
	Aqua 12	12	-		Aqua 12	60	-			Aqua 12	108	-
ORANGE	Blue 1	13	I-55 TCF FIBER #13 TO BOLINGBROOK WEIGH STATION	WHITE	Blue 1	61	-		VIOLET	Blue 1	109	-
	Orange 2	14	I-55 TCF FIBER #14 TO BOLINGBROOK WEIGH STATION		Orange 2	62	-			Orange 2	110	-
	Green 3	15	I-55 TCF FIBER #15 TO BOLINGBROOK WEIGH STATION		Green 3	63	-			Green 3	111	-
	Brown 4	16	I-55 TCF FIBER #16 TO BOLINGBROOK WEIGH STATION		Brown 4	64	-			Brown 4	112	-
	Slate 5	17	I-55 TCF FIBER #17 TO BOLINGBROOK WEIGH STATION		Slate 5	65	-			Slate 5	113	-
	White 6	18	I-55 TCF FIBER #18 TO BOLINGBROOK WEIGH STATION		White 6	66	-			White 6	114	-
	Red 7	19	I-55 TCF FIBER #19 TO BOLINGBROOK WEIGH STATION		Red 7	67	-			Red 7	115	-
	Black 8	20	I-55 TCF FIBER #20 TO BOLINGBROOK WEIGH STATION		Black 8	68	-			Black 8	116	-
	Yellow 9	21	I-55 TCF FIBER #21 TO BOLINGBROOK WEIGH STATION		Yellow 9	69	-			Yellow 9	117	-
	Violet 10	22	I-55 TCF FIBER #22 TO BOLINGBROOK WEIGH STATION		Violet 10	70	-			Violet 10	118	-
	Rose 11	23	I-55 TCF FIBER #23 TO BOLINGBROOK WEIGH STATION		Rose 11	71	-			Rose 11	119	-
	Aqua 12	24	I-55 TCF FIBER #24 TO BOLINGBROOK WEIGH STATION		Aqua 12	72	-			Aqua 12	120	-
GREEN	Blue 1	25	-	RED	Blue 1	73	-		ROSE	Blue 1	121	-
	Orange 2	26	-		Orange 2	74	-			Orange 2	122	-
	Green 3	27	-		Green 3	75	-			Green 3	123	-
	Brown 4	28	-		Brown 4	76	-			Brown 4	124	-
	Slate 5	29	-		Slate 5	77	-			Slate 5	125	-
	White 6	30	-		White 6	78	-			White 6	126	-
	Red 7	31	-		Red 7	79	-			Red 7	127	-
	Black 8	32	-		Black 8	80	-			Black 8	128	-
	Yellow 9	33	-		Yellow 9	81	-			Yellow 9	129	-
	Violet 10	34	-		Violet 10	82	-			Violet 10	130	-
	Rose 11	35	-		Rose 11	83	-			Rose 11	131	-
	Aqua 12	36	-		Aqua 12	84	-			Aqua 12	132	-
BROWN	Blue 1	37	-	BLACK	Blue 1	85	-		AQUA	Blue 1	133	-
	Orange 2	38	-		Orange 2	86	-			Orange 2	134	-
	Green 3	39	-		Green 3	87	-			Green 3	135	-
	Brown 4	40	-		Brown 4	88	-			Brown 4	136	-
	Slate 5	41	-		Slate 5	89	-			Slate 5	137	-
	White 6	42	-		White 6	90	-			White 6	138	-
	Red 7	43	-		Red 7	91	-			Red 7	139	-
	Black 8	44	-		Black 8	92	-			Black 8	140	-
	Yellow 9	45	-		Yellow 9	93	-			Yellow 9	141	-
	Violet 10	46	-		Violet 10	94	-			Violet 10	142	-
	Rose 11	47	-		Rose 11	95	-			Rose 11	143	-
	Aqua 12	48	-		Aqua 12	96	-			Aqua 12	144	-

MODEL: 2D SHEET H
FILE NAME: C:\TRANSYSTEMS\PW_LOCALTRANSYSTEMS-PW-01\DMS32656\62R13-SHT-ITS-FIBER-05.DGN

ATLAS TECHNICAL CONSULTANTS, LLC
100 S. WACKER DRIVE, SUITE 400
CHICAGO, IL 60606

USER NAME = SALASL	DESIGNED - JAM	REVISED -	
	DRAWN - JAM	REVISED -	
PLOT SCALE = 0.16666667 ' / IN.	CHECKED - DJM	REVISED -	
PLOT DATE = 11/12/2025	DATE - 11/12/2025	REVISED -	

STATE OF ILLINOIS
DEPARTMENT OF TRANSPORTATION

I-80
TRUNK FIBER ASSIGNMENTS

SCALE: NONE | SHEET OF SHEETS | STA. TO STA.

F.A.I. RTE.	SECTION	COUNTY	TOTAL SHEETS	SHEET NO.
80	FAI 80 21 VLS	VARIOUS	467	412
		CONTRACT NO. 62R19		
	ILLINOIS	FED. AID PROJECT		

TRUNK CABLE FIBER ASSIGNMENTS								ORIGINATION	PROPOSED I-80 COMMUNICATIONS HUT			
TRUNK CABLE DESIGNATION			TCF-IE-EB-011					DESTINATION	EXISTING I-55 FO INTERCONNECT CABINET			
BUFFER TUBE	FIBER	FIBER NO	ASSIGNMENT	BUFFER TUBE	FIBER NO	FIBER NO	ASSIGNMENT		BUFFER TUBE	FIBER	FIBER NO	ASSIGNMENT
BLUE	Blue 1	1	-	SLATE	Blue 1	49	-		YELLOW	Blue 1	97	-
	Orange 2	2	-		Orange 2	50	-			Orange 2	98	-
	Green 3	3	-		Green 3	51	-			Green 3	99	-
	Brown 4	4	-		Brown 4	52	-			Brown 4	100	-
	Slate 5	5	-		Slate 5	53	-			Slate 5	101	-
	White 6	6	-		White 6	54	-			White 6	102	-
	Red 7	7	-		Red 7	55	-			Red 7	103	-
	Black 8	8	-		Black 8	56	-			Black 8	104	-
	Yellow 9	9	-		Yellow 9	57	-			Yellow 9	105	-
	Violet 10	10	-		Violet 10	58	-			Violet 10	106	-
	Rose 11	11	-		Rose 11	59	-			Rose 11	107	-
	Aqua 12	12	-		Aqua 12	60	-			Aqua 12	108	-
ORANGE	Blue 1	13	-	WHITE	Blue 1	61	-		VIOLET	Blue 1	109	-
	Orange 2	14	-		Orange 2	62	-			Orange 2	110	-
	Green 3	15	-		Green 3	63	-			Green 3	111	-
	Brown 4	16	-		Brown 4	64	-			Brown 4	112	-
	Slate 5	17	-		Slate 5	65	-			Slate 5	113	-
	White 6	18	-		White 6	66	-			White 6	114	-
	Red 7	19	-		Red 7	67	-			Red 7	115	-
	Black 8	20	-		Black 8	68	-			Black 8	116	-
	Yellow 9	21	-		Yellow 9	69	-			Yellow 9	117	-
	Violet 10	22	-		Violet 10	70	-			Violet 10	118	-
	Rose 11	23	-		Rose 11	71	-			Rose 11	119	-
	Aqua 12	24	-		Aqua 12	72	-			Aqua 12	120	-
GREEN	Blue 1	25	-	RED	Blue 1	73	-		ROSE	Blue 1	121	-
	Orange 2	26	-		Orange 2	74	-			Orange 2	122	-
	Green 3	27	-		Green 3	75	-			Green 3	123	-
	Brown 4	28	-		Brown 4	76	-			Brown 4	124	-
	Slate 5	29	-		Slate 5	77	-			Slate 5	125	-
	White 6	30	-		White 6	78	-			White 6	126	-
	Red 7	31	-		Red 7	79	-			Red 7	127	-
	Black 8	32	-		Black 8	80	-			Black 8	128	-
	Yellow 9	33	-		Yellow 9	81	-			Yellow 9	129	-
	Violet 10	34	-		Violet 10	82	-			Violet 10	130	-
	Rose 11	35	-		Rose 11	83	-			Rose 11	131	-
	Aqua 12	36	-		Aqua 12	84	-			Aqua 12	132	-
BROWN	Blue 1	37	-	BLACK	Blue 1	85	-		AQUA	Blue 1	133	-
	Orange 2	38	-		Orange 2	86	-			Orange 2	134	-
	Green 3	39	-		Green 3	87	-			Green 3	135	-
	Brown 4	40	-		Brown 4	88	-			Brown 4	136	-
	Slate 5	41	-		Slate 5	89	-			Slate 5	137	-
	White 6	42	-		White 6	90	-			White 6	138	-
	Red 7	43	-		Red 7	91	-			Red 7	139	-
	Black 8	44	-		Black 8	92	-			Black 8	140	-
	Yellow 9	45	-		Yellow 9	93	-			Yellow 9	141	-
	Violet 10	46	-		Violet 10	94	-			Violet 10	142	-
	Rose 11	47	-		Rose 11	95	-			Rose 11	143	-
	Aqua 12	48	-		Aqua 12	96	-			Aqua 12	144	-

MODEL: 2D SHEET H
FILE NAME: C:\TRANSYSTEMS\PW_LOCAL\TRANSYSTEMS-PW-01\DMS32656\62R13-SHT-ITS-FIBER-06.DGN

ATLAS TECHNICAL CONSULTANTS, LLC
100 S. WACKER DRIVE, SUITE 400
CHICAGO, IL 60606

USER NAME = SALASL	DESIGNED - JAM	REVISED -	
	DRAWN - JAM	REVISED -	
PLOT SCALE = 0.16666667 ' / IN.	CHECKED - DJM	REVISED -	
PLOT DATE = 11/12/2025	DATE - 11/12/2025	REVISED -	

STATE OF ILLINOIS
DEPARTMENT OF TRANSPORTATION

I-80
TRUNK FIBER ASSIGNMENTS

SCALE: NONE | SHEET OF SHEETS | STA. TO STA.

F.A.I. RTE.	SECTION	COUNTY	TOTAL SHEETS	SHEET NO.
80	FAI 80 21 VLS	VARIOUS	467	413
		CONTRACT NO. 62R19		
	ILLINOIS	FED. AID PROJECT		

TRUNK CABLE FIBER ASSIGNMENTS								ORIGINATION	PROPOSED I-80 COMMUNICATIONS HUT			
TRUNK CABLE DESIGNATION			TCF-IE-WB-010					DESTINATION	CMV-IE-WB-34B			
BUFFER TUBE	FIBER	FIBER NO	ASSIGNMENT	BUFFER TUBE	FIBER NO	FIBER NO	ASSIGNMENT		BUFFER TUBE	FIBER	FIBER NO	ASSIGNMENT
BLUE	Blue 1	1	-	SLATE	Blue 1	49	-		YELLOW	Blue 1	97	-
	Orange 2	2	-		Orange 2	50	-			Orange 2	98	-
	Green 3	3	-		Green 3	51	-			Green 3	99	-
	Brown 4	4	-		Brown 4	52	-			Brown 4	100	-
	Slate 5	5	-		Slate 5	53	-			Slate 5	101	-
	White 6	6	-		White 6	54	-			White 6	102	-
	Red 7	7	-		Red 7	55	-			Red 7	103	-
	Black 8	8	-		Black 8	56	-			Black 8	104	-
	Yellow 9	9	-		Yellow 9	57	-			Yellow 9	105	-
	Violet 10	10	-		Violet 10	58	-			Violet 10	106	-
	Rose 11	11	-		Rose 11	59	-			Rose 11	107	-
	Aqua 12	12	-		Aqua 12	60	-			Aqua 12	108	-
ORANGE	Blue 1	13	-	WHITE	Blue 1	61	-		VIOLET	Blue 1	109	-
	Orange 2	14	-		Orange 2	62	-			Orange 2	110	-
	Green 3	15	-		Green 3	63	-			Green 3	111	-
	Brown 4	16	-		Brown 4	64	-			Brown 4	112	-
	Slate 5	17	-		Slate 5	65	-			Slate 5	113	-
	White 6	18	-		White 6	66	-			White 6	114	-
	Red 7	19	-		Red 7	67	-			Red 7	115	-
	Black 8	20	-		Black 8	68	-			Black 8	116	-
	Yellow 9	21	-		Yellow 9	69	-			Yellow 9	117	-
	Violet 10	22	-		Violet 10	70	-			Violet 10	118	-
	Rose 11	23	-		Rose 11	71	-			Rose 11	119	-
	Aqua 12	24	-		Aqua 12	72	-			Aqua 12	120	-
GREEN	Blue 1	25	-	RED	Blue 1	73	-		ROSE	Blue 1	121	-
	Orange 2	26	-		Orange 2	74	-			Orange 2	122	-
	Green 3	27	-		Green 3	75	-			Green 3	123	-
	Brown 4	28	-		Brown 4	76	-			Brown 4	124	-
	Slate 5	29	-		Slate 5	77	-			Slate 5	125	-
	White 6	30	-		White 6	78	-			White 6	126	-
	Red 7	31	-		Red 7	79	-			Red 7	127	-
	Black 8	32	-		Black 8	80	-			Black 8	128	-
	Yellow 9	33	-		Yellow 9	81	-			Yellow 9	129	-
	Violet 10	34	-		Violet 10	82	-			Violet 10	130	-
	Rose 11	35	-		Rose 11	83	-			Rose 11	131	-
	Aqua 12	36	-		Aqua 12	84	-			Aqua 12	132	-
BROWN	Blue 1	37	-	BLACK	Blue 1	85	-		AQUA	Blue 1	133	-
	Orange 2	38	-		Orange 2	86	-			Orange 2	134	-
	Green 3	39	-		Green 3	87	-			Green 3	135	-
	Brown 4	40	-		Brown 4	88	-			Brown 4	136	-
	Slate 5	41	-		Slate 5	89	-			Slate 5	137	-
	White 6	42	-		White 6	90	-			White 6	138	-
	Red 7	43	-		Red 7	91	-			Red 7	139	-
	Black 8	44	-		Black 8	92	-			Black 8	140	-
	Yellow 9	45	-		Yellow 9	93	-			Yellow 9	141	-
	Violet 10	46	-		Violet 10	94	-			Violet 10	142	-
	Rose 11	47	-		Rose 11	95	-			Rose 11	143	-
	Aqua 12	48	-		Aqua 12	96	-			Aqua 12	144	-

MODEL: 2D SHEET H
FILE NAME: C:\TRANSYSTEMS\PW_LOCAL\TRANSYSTEMS-PW-01\DMS32656\62R19-SHT-ITS-FIBER-07.DGN

ATLAS TECHNICAL CONSULTANTS, LLC
100 S. WACKER DRIVE, SUITE 400
CHICAGO, IL 60606

USER NAME = SALASL	DESIGNED - JAM	REVISED -	
	DRAWN - JAM	REVISED -	
PLOT SCALE = 0.16666667 ' / IN.	CHECKED - DJM	REVISED -	
PLOT DATE = 11/12/2025	DATE - 11/12/2025	REVISED -	

STATE OF ILLINOIS
DEPARTMENT OF TRANSPORTATION

I-80
TRUNK FIBER ASSIGNMENTS

SCALE: NONE | SHEET OF SHEETS | STA. TO STA.

F.A.I. RTE.	SECTION	COUNTY	TOTAL SHEETS	SHEET NO.
80	FAI 80 21 VLS	VARIOUS	467	414
		CONTRACT NO. 62R19		
	ILLINOIS	FED. AID PROJECT		

TRUNK CABLE FIBER ASSIGNMENTS								ORIGINATION	PROPOSED I-80 COMMUNICATIONS HUT			
TRUNK CABLE DESIGNATION			TCF-IE-EB-010					DESTINATION	CMV-IE-EB-34B			
BUFFER TUBE	FIBER	FIBER NO	ASSIGNMENT	BUFFER TUBE	FIBER NO	FIBER NO	ASSIGNMENT		BUFFER TUBE	FIBER	FIBER NO	ASSIGNMENT
BLUE	Blue 1	1	-	SLATE	Blue 1	49	-		YELLOW	Blue 1	97	-
	Orange 2	2	-		Orange 2	50	-			Orange 2	98	-
	Green 3	3	-		Green 3	51	-			Green 3	99	-
	Brown 4	4	-		Brown 4	52	-			Brown 4	100	-
	Slate 5	5	-		Slate 5	53	-			Slate 5	101	-
	White 6	6	-		White 6	54	-			White 6	102	-
	Red 7	7	-		Red 7	55	-			Red 7	103	-
	Black 8	8	-		Black 8	56	-			Black 8	104	-
	Yellow 9	9	-		Yellow 9	57	-			Yellow 9	105	-
	Violet 10	10	-		Violet 10	58	-			Violet 10	106	-
	Rose 11	11	-		Rose 11	59	-			Rose 11	107	-
	Aqua 12	12	-		Aqua 12	60	-			Aqua 12	108	-
ORANGE	Blue 1	13	-	WHITE	Blue 1	61	-		VIOLET	Blue 1	109	-
	Orange 2	14	-		Orange 2	62	-			Orange 2	110	-
	Green 3	15	-		Green 3	63	-			Green 3	111	-
	Brown 4	16	-		Brown 4	64	-			Brown 4	112	-
	Slate 5	17	-		Slate 5	65	-			Slate 5	113	-
	White 6	18	-		White 6	66	-			White 6	114	-
	Red 7	19	-		Red 7	67	-			Red 7	115	-
	Black 8	20	-		Black 8	68	-			Black 8	116	-
	Yellow 9	21	-		Yellow 9	69	-			Yellow 9	117	-
	Violet 10	22	-		Violet 10	70	-			Violet 10	118	-
	Rose 11	23	-		Rose 11	71	-			Rose 11	119	-
	Aqua 12	24	-		Aqua 12	72	-			Aqua 12	120	-
GREEN	Blue 1	25	-	RED	Blue 1	73	-		ROSE	Blue 1	121	-
	Orange 2	26	-		Orange 2	74	-			Orange 2	122	-
	Green 3	27	-		Green 3	75	-			Green 3	123	-
	Brown 4	28	-		Brown 4	76	-			Brown 4	124	-
	Slate 5	29	-		Slate 5	77	-			Slate 5	125	-
	White 6	30	-		White 6	78	-			White 6	126	-
	Red 7	31	-		Red 7	79	-			Red 7	127	-
	Black 8	32	-		Black 8	80	-			Black 8	128	-
	Yellow 9	33	-		Yellow 9	81	-			Yellow 9	129	-
	Violet 10	34	-		Violet 10	82	-			Violet 10	130	-
	Rose 11	35	-		Rose 11	83	-			Rose 11	131	-
	Aqua 12	36	-		Aqua 12	84	-			Aqua 12	132	-
BROWN	Blue 1	37	-	BLACK	Blue 1	85	-		AQUA	Blue 1	133	-
	Orange 2	38	-		Orange 2	86	-			Orange 2	134	-
	Green 3	39	-		Green 3	87	-			Green 3	135	-
	Brown 4	40	-		Brown 4	88	-			Brown 4	136	-
	Slate 5	41	-		Slate 5	89	-			Slate 5	137	-
	White 6	42	-		White 6	90	-			White 6	138	-
	Red 7	43	-		Red 7	91	-			Red 7	139	-
	Black 8	44	-		Black 8	92	-			Black 8	140	-
	Yellow 9	45	-		Yellow 9	93	-			Yellow 9	141	-
	Violet 10	46	-		Violet 10	94	-			Violet 10	142	-
	Rose 11	47	-		Rose 11	95	-			Rose 11	143	-
	Aqua 12	48	-		Aqua 12	96	-			Aqua 12	144	-

MODEL: 2D SHEET H
FILE NAME: C:\TRANSYSTEMS\PW_LOCAL\TRANSYSTEMS-PW-01\DMS32656\62R13-SHT-ITS-FIBER-08.DGN

ATLAS TECHNICAL CONSULTANTS, LLC
100 S. WACKER DRIVE, SUITE 400
CHICAGO, IL 60606

USER NAME = SALASL	DESIGNED - JAM	REVISED -	
	DRAWN - JAM	REVISED -	
PLOT SCALE = 0.16666667 ' / IN.	CHECKED - DJM	REVISED -	
PLOT DATE = 11/12/2025	DATE - 11/12/2025	REVISED -	

STATE OF ILLINOIS
DEPARTMENT OF TRANSPORTATION

I-80
TRUNK FIBER ASSIGNMENTS

SCALE: NONE | SHEET OF SHEETS | STA. TO STA.

F.A.I. RTE.	SECTION	COUNTY	TOTAL SHEETS	SHEET NO.
80	FAI 80 21 VLS	VARIOUS	467	415
		CONTRACT NO. 62R19		
	ILLINOIS	FED. AID PROJECT		

TRUNK CABLE FIBER ASSIGNMENTS								ORIGINATION	CMV-IE-WB-34B			
TRUNK CABLE DESIGNATION			TCF-IE-WB-009					DESTINATION	CMV-IE-WB-31A			
BUFFER TUBE	FIBER	FIBER NO	ASSIGNMENT	BUFFER TUBE	FIBER NO	FIBER NO	ASSIGNMENT		BUFFER TUBE	FIBER	FIBER NO	ASSIGNMENT
BLUE	Blue 1	1	-	SLATE	Blue 1	49	-		YELLOW	Blue 1	97	-
	Orange 2	2	-		Orange 2	50	-			Orange 2	98	-
	Green 3	3	-		Green 3	51	-			Green 3	99	-
	Brown 4	4	-		Brown 4	52	-			Brown 4	100	-
	Slate 5	5	-		Slate 5	53	-			Slate 5	101	-
	White 6	6	-		White 6	54	-			White 6	102	-
	Red 7	7	-		Red 7	55	-			Red 7	103	-
	Black 8	8	-		Black 8	56	-			Black 8	104	-
	Yellow 9	9	-		Yellow 9	57	-			Yellow 9	105	-
	Violet 10	10	-		Violet 10	58	-			Violet 10	106	-
	Rose 11	11	-		Rose 11	59	-			Rose 11	107	-
	Aqua 12	12	-		Aqua 12	60	-			Aqua 12	108	-
ORANGE	Blue 1	13	-	WHITE	Blue 1	61	-		VIOLET	Blue 1	109	-
	Orange 2	14	-		Orange 2	62	-			Orange 2	110	-
	Green 3	15	-		Green 3	63	-			Green 3	111	-
	Brown 4	16	-		Brown 4	64	-			Brown 4	112	-
	Slate 5	17	-		Slate 5	65	-			Slate 5	113	-
	White 6	18	-		White 6	66	-			White 6	114	-
	Red 7	19	-		Red 7	67	-			Red 7	115	-
	Black 8	20	-		Black 8	68	-			Black 8	116	-
	Yellow 9	21	-		Yellow 9	69	-			Yellow 9	117	-
	Violet 10	22	-		Violet 10	70	-			Violet 10	118	-
	Rose 11	23	-		Rose 11	71	-			Rose 11	119	-
	Aqua 12	24	-		Aqua 12	72	-			Aqua 12	120	-
GREEN	Blue 1	25	-	RED	Blue 1	73	-		ROSE	Blue 1	121	-
	Orange 2	26	-		Orange 2	74	-			Orange 2	122	-
	Green 3	27	-		Green 3	75	-			Green 3	123	-
	Brown 4	28	-		Brown 4	76	-			Brown 4	124	-
	Slate 5	29	-		Slate 5	77	-			Slate 5	125	-
	White 6	30	-		White 6	78	-			White 6	126	-
	Red 7	31	-		Red 7	79	-			Red 7	127	-
	Black 8	32	-		Black 8	80	-			Black 8	128	-
	Yellow 9	33	-		Yellow 9	81	-			Yellow 9	129	-
	Violet 10	34	-		Violet 10	82	-			Violet 10	130	-
	Rose 11	35	-		Rose 11	83	-			Rose 11	131	-
	Aqua 12	36	-		Aqua 12	84	-			Aqua 12	132	-
BROWN	Blue 1	37	-	BLACK	Blue 1	85	-		AQUA	Blue 1	133	-
	Orange 2	38	-		Orange 2	86	-			Orange 2	134	-
	Green 3	39	-		Green 3	87	-			Green 3	135	-
	Brown 4	40	-		Brown 4	88	-			Brown 4	136	-
	Slate 5	41	-		Slate 5	89	-			Slate 5	137	-
	White 6	42	-		White 6	90	-			White 6	138	-
	Red 7	43	-		Red 7	91	-			Red 7	139	-
	Black 8	44	-		Black 8	92	-			Black 8	140	-
	Yellow 9	45	-		Yellow 9	93	-			Yellow 9	141	-
	Violet 10	46	-		Violet 10	94	-			Violet 10	142	-
	Rose 11	47	-		Rose 11	95	-			Rose 11	143	-
	Aqua 12	48	-		Aqua 12	96	-			Aqua 12	144	-

MODEL: 2D SHEET H
FILE NAME: C:\TRANSYSTEMS\PW_LOCAL\TRANSYSTEMS-PW-01\DMS32656\62R19-SHT-ITS-FIBER-09.DGN

ATLAS TECHNICAL CONSULTANTS, LLC
100 S. WACKER DRIVE, SUITE 400
CHICAGO, IL 60606

USER NAME = SALASL	DESIGNED - JAM	REVISED -	
	DRAWN - JAM	REVISED -	
PLOT SCALE = 0.16666667 ' / IN.	CHECKED - DJM	REVISED -	
PLOT DATE = 11/12/2025	DATE - 11/12/2025	REVISED -	

STATE OF ILLINOIS
DEPARTMENT OF TRANSPORTATION

I-80
TRUNK FIBER ASSIGNMENTS

SCALE: NONE | SHEET OF SHEETS | STA. TO STA.

F.A.I. RTE.	SECTION	COUNTY	TOTAL SHEETS	SHEET NO.
80	FAI 80 21 VLS	VARIOUS	467	416
		CONTRACT NO. 62R19		
	ILLINOIS	FED. AID PROJECT		

TRUNK CABLE FIBER ASSIGNMENTS								ORIGINATION	CMV-IE-EB-34B		
TRUNK CABLE DESIGNATION			TCF-IE-EB-009					DESTINATION	CMV-IE-EB-31A		
BUFFER TUBE	FIBER	FIBER NO	ASSIGNMENT	BUFFER TUBE	FIBER NO	FIBER NO	ASSIGNMENT	BUFFER TUBE	FIBER	FIBER NO	ASSIGNMENT
BLUE	Blue 1	1	-	SLATE	Blue 1	49	-	YELLOW	Blue 1	97	-
	Orange 2	2	-		Orange 2	50	-		Orange 2	98	-
	Green 3	3	-		Green 3	51	-		Green 3	99	-
	Brown 4	4	-		Brown 4	52	-		Brown 4	100	-
	Slate 5	5	-		Slate 5	53	-		Slate 5	101	-
	White 6	6	-		White 6	54	-		White 6	102	-
	Red 7	7	-		Red 7	55	-		Red 7	103	-
	Black 8	8	-		Black 8	56	-		Black 8	104	-
	Yellow 9	9	-		Yellow 9	57	-		Yellow 9	105	-
	Violet 10	10	-		Violet 10	58	-		Violet 10	106	-
	Rose 11	11	-		Rose 11	59	-		Rose 11	107	-
	Aqua 12	12	-		Aqua 12	60	-		Aqua 12	108	-
ORANGE	Blue 1	13	-	WHITE	Blue 1	61	-	VIOLET	Blue 1	109	-
	Orange 2	14	-		Orange 2	62	-		Orange 2	110	-
	Green 3	15	-		Green 3	63	-		Green 3	111	-
	Brown 4	16	-		Brown 4	64	-		Brown 4	112	-
	Slate 5	17	-		Slate 5	65	-		Slate 5	113	-
	White 6	18	-		White 6	66	-		White 6	114	-
	Red 7	19	-		Red 7	67	-		Red 7	115	-
	Black 8	20	-		Black 8	68	-		Black 8	116	-
	Yellow 9	21	-		Yellow 9	69	-		Yellow 9	117	-
	Violet 10	22	-		Violet 10	70	-		Violet 10	118	-
	Rose 11	23	-		Rose 11	71	-		Rose 11	119	-
	Aqua 12	24	-		Aqua 12	72	-		Aqua 12	120	-
GREEN	Blue 1	25	-	RED	Blue 1	73	-	ROSE	Blue 1	121	-
	Orange 2	26	-		Orange 2	74	-		Orange 2	122	-
	Green 3	27	-		Green 3	75	-		Green 3	123	-
	Brown 4	28	-		Brown 4	76	-		Brown 4	124	-
	Slate 5	29	-		Slate 5	77	-		Slate 5	125	-
	White 6	30	-		White 6	78	-		White 6	126	-
	Red 7	31	-		Red 7	79	-		Red 7	127	-
	Black 8	32	-		Black 8	80	-		Black 8	128	-
	Yellow 9	33	-		Yellow 9	81	-		Yellow 9	129	-
	Violet 10	34	-		Violet 10	82	-		Violet 10	130	-
	Rose 11	35	-		Rose 11	83	-		Rose 11	131	-
	Aqua 12	36	-		Aqua 12	84	-		Aqua 12	132	-
BROWN	Blue 1	37	-	BLACK	Blue 1	85	-	AQUA	Blue 1	133	-
	Orange 2	38	-		Orange 2	86	-		Orange 2	134	-
	Green 3	39	-		Green 3	87	-		Green 3	135	-
	Brown 4	40	-		Brown 4	88	-		Brown 4	136	-
	Slate 5	41	-		Slate 5	89	-		Slate 5	137	-
	White 6	42	-		White 6	90	-		White 6	138	-
	Red 7	43	-		Red 7	91	-		Red 7	139	-
	Black 8	44	-		Black 8	92	-		Black 8	140	-
	Yellow 9	45	-		Yellow 9	93	-		Yellow 9	141	-
	Violet 10	46	-		Violet 10	94	-		Violet 10	142	-
	Rose 11	47	-		Rose 11	95	-		Rose 11	143	-
	Aqua 12	48	-		Aqua 12	96	-		Aqua 12	144	-

MODEL: 2D SHEET H
FILE NAME: C:\TRANSYSTEMS\PW_LOCAL\TRANSYSTEMS-PW-01\DMS32656\62R13-SHT-ITS-FIBER-10.DGN

ATLAS TECHNICAL CONSULTANTS, LLC
100 S. WACKER DRIVE, SUITE 400
CHICAGO, IL 60606

USER NAME = SALASL	DESIGNED - JAM	REVISED -	
	DRAWN - JAM	REVISED -	
PLOT SCALE = 0.16666667 ' / IN.	CHECKED - DJM	REVISED -	
PLOT DATE = 11/12/2025	DATE - 11/12/2025	REVISED -	

STATE OF ILLINOIS
DEPARTMENT OF TRANSPORTATION

I-80
TRUNK FIBER ASSIGNMENTS

SCALE: NONE | SHEET OF SHEETS | STA. TO STA.

F.A.I. RTE.	SECTION	COUNTY	TOTAL SHEETS	SHEET NO.
80	FAI 80 21 VLS	VARIOUS	467	417
		CONTRACT NO. 62R19		
	ILLINOIS	FED. AID PROJECT		

TRUNK CABLE FIBER ASSIGNMENTS								ORIGINATION	CMV-IE-EB-30E		
TRUNK CABLE DESIGNATION		TCF-IE-WB-007						DESTINATION	CMV-IE-WB-26D		
BUFFER TUBE	FIBER	FIBER NO	ASSIGNMENT	BUFFER TUBE	FIBER NO	FIBER NO	ASSIGNMENT	BUFFER TUBE	FIBER	FIBER NO	ASSIGNMENT
BLUE	Blue 1	1	-	SLATE	Blue 1	49	-	YELLOW	Blue 1	97	-
	Orange 2	2	-		Orange 2	50	-		Orange 2	98	-
	Green 3	3	-		Green 3	51	-		Green 3	99	-
	Brown 4	4	-		Brown 4	52	-		Brown 4	100	-
	Slate 5	5	-		Slate 5	53	-		Slate 5	101	-
	White 6	6	-		White 6	54	-		White 6	102	-
	Red 7	7	-		Red 7	55	-		Red 7	103	-
	Black 8	8	-		Black 8	56	-		Black 8	104	-
	Yellow 9	9	-		Yellow 9	57	-		Yellow 9	105	-
	Violet 10	10	-		Violet 10	58	-		Violet 10	106	-
	Rose 11	11	-		Rose 11	59	-		Rose 11	107	-
	Aqua 12	12	-		Aqua 12	60	-		Aqua 12	108	-
ORANGE	Blue 1	13	-	WHITE	Blue 1	61	-	VIOLET	Blue 1	109	-
	Orange 2	14	-		Orange 2	62	-		Orange 2	110	-
	Green 3	15	-		Green 3	63	-		Green 3	111	-
	Brown 4	16	-		Brown 4	64	-		Brown 4	112	-
	Slate 5	17	-		Slate 5	65	-		Slate 5	113	-
	White 6	18	-		White 6	66	-		White 6	114	-
	Red 7	19	-		Red 7	67	-		Red 7	115	-
	Black 8	20	-		Black 8	68	-		Black 8	116	-
	Yellow 9	21	-		Yellow 9	69	-		Yellow 9	117	-
	Violet 10	22	-		Violet 10	70	-		Violet 10	118	-
	Rose 11	23	-		Rose 11	71	-		Rose 11	119	-
	Aqua 12	24	-		Aqua 12	72	-		Aqua 12	120	-
GREEN	Blue 1	25	-	RED	Blue 1	73	-	ROSE	Blue 1	121	-
	Orange 2	26	-		Orange 2	74	-		Orange 2	122	-
	Green 3	27	-		Green 3	75	-		Green 3	123	-
	Brown 4	28	-		Brown 4	76	-		Brown 4	124	-
	Slate 5	29	-		Slate 5	77	-		Slate 5	125	-
	White 6	30	-		White 6	78	-		White 6	126	-
	Red 7	31	-		Red 7	79	-		Red 7	127	-
	Black 8	32	-		Black 8	80	-		Black 8	128	-
	Yellow 9	33	-		Yellow 9	81	-		Yellow 9	129	-
	Violet 10	34	-		Violet 10	82	-		Violet 10	130	-
	Rose 11	35	-		Rose 11	83	-		Rose 11	131	-
	Aqua 12	36	-		Aqua 12	84	-		Aqua 12	132	-
BROWN	Blue 1	37	-	BLACK	Blue 1	85	-	AQUA	Blue 1	133	-
	Orange 2	38	-		Orange 2	86	-		Orange 2	134	-
	Green 3	39	-		Green 3	87	-		Green 3	135	-
	Brown 4	40	-		Brown 4	88	-		Brown 4	136	-
	Slate 5	41	-		Slate 5	89	-		Slate 5	137	-
	White 6	42	-		White 6	90	-		White 6	138	-
	Red 7	43	-		Red 7	91	-		Red 7	139	-
	Black 8	44	-		Black 8	92	-		Black 8	140	-
	Yellow 9	45	-		Yellow 9	93	-		Yellow 9	141	-
	Violet 10	46	-		Violet 10	94	-		Violet 10	142	-
	Rose 11	47	-		Rose 11	95	-		Rose 11	143	-
	Aqua 12	48	-		Aqua 12	96	-		Aqua 12	144	-

MODEL: 2D SHEET H
FILE NAME: C:\TRANSYSTEMS\PW_LOCAL\TRANSYSTEMS-PW-01\DMS32656\62R19-SHT-ITS-FIBER-11.DGN

ATLAS TECHNICAL CONSULTANTS, LLC
100 S. WACKER DRIVE, SUITE 400
CHICAGO, IL 60606

USER NAME = SALASL	DESIGNED - JAM	REVISED -	
	DRAWN - JAM	REVISED -	
PLOT SCALE = 0.16666667 ' / IN.	CHECKED - DJM	REVISED -	
PLOT DATE = 11/12/2025	DATE - 11/12/2025	REVISED -	

STATE OF ILLINOIS
DEPARTMENT OF TRANSPORTATION

I-80
TRUNK FIBER ASSIGNMENTS

SCALE: NONE | SHEET OF SHEETS | STA. TO STA.

F.A.I. RTE.	SECTION	COUNTY	TOTAL SHEETS	SHEET NO.
80	FAI 80 21 VLS	VARIOUS	467	418
		CONTRACT NO. 62R19		
	ILLINOIS	FED. AID PROJECT		

TRUNK CABLE FIBER ASSIGNMENTS		ORIGINATION	CMV-IE-EB-30E
TRUNK CABLE DESIGNATION	TCF-IE-EB-007	DESTINATION	CMV-IE-WB-26A

BUFFER TUBE	FIBER	FIBER NO	ASSIGNMENT	BUFFER TUBE	FIBER NO	FIBER NO	ASSIGNMENT	BUFFER TUBE	FIBER	FIBER NO	ASSIGNMENT
BLUE	Blue 1	1	-	SLATE	Blue 1	49	-	YELLOW	Blue 1	97	-
	Orange 2	2	-		Orange 2	50	-		Orange 2	98	-
	Green 3	3	-		Green 3	51	-		Green 3	99	-
	Brown 4	4	-		Brown 4	52	-		Brown 4	100	-
	Slate 5	5	-		Slate 5	53	-		Slate 5	101	-
	White 6	6	-		White 6	54	-		White 6	102	-
	Red 7	7	-		Red 7	55	-		Red 7	103	-
	Black 8	8	-		Black 8	56	-		Black 8	104	-
	Yellow 9	9	-		Yellow 9	57	-		Yellow 9	105	-
	Violet 10	10	-		Violet 10	58	-		Violet 10	106	-
	Rose 11	11	-		Rose 11	59	-		Rose 11	107	-
	Aqua 12	12	-		Aqua 12	60	-		Aqua 12	108	-
ORANGE	Blue 1	13	-	WHITE	Blue 1	61	-	VIOLET	Blue 1	109	-
	Orange 2	14	-		Orange 2	62	-		Orange 2	110	-
	Green 3	15	-		Green 3	63	-		Green 3	111	-
	Brown 4	16	-		Brown 4	64	-		Brown 4	112	-
	Slate 5	17	-		Slate 5	65	-		Slate 5	113	-
	White 6	18	-		White 6	66	-		White 6	114	-
	Red 7	19	-		Red 7	67	-		Red 7	115	-
	Black 8	20	-		Black 8	68	-		Black 8	116	-
	Yellow 9	21	-		Yellow 9	69	-		Yellow 9	117	-
	Violet 10	22	-		Violet 10	70	-		Violet 10	118	-
	Rose 11	23	-		Rose 11	71	-		Rose 11	119	-
	Aqua 12	24	-		Aqua 12	72	-		Aqua 12	120	-
GREEN	Blue 1	25	-	RED	Blue 1	73	-	ROSE	Blue 1	121	-
	Orange 2	26	-		Orange 2	74	-		Orange 2	122	-
	Green 3	27	-		Green 3	75	-		Green 3	123	-
	Brown 4	28	-		Brown 4	76	-		Brown 4	124	-
	Slate 5	29	-		Slate 5	77	-		Slate 5	125	-
	White 6	30	-		White 6	78	-		White 6	126	-
	Red 7	31	-		Red 7	79	-		Red 7	127	-
	Black 8	32	-		Black 8	80	-		Black 8	128	-
	Yellow 9	33	-		Yellow 9	81	-		Yellow 9	129	-
	Violet 10	34	-		Violet 10	82	-		Violet 10	130	-
	Rose 11	35	-		Rose 11	83	-		Rose 11	131	-
	Aqua 12	36	-		Aqua 12	84	-		Aqua 12	132	-
BROWN	Blue 1	37	-	BLACK	Blue 1	85	-	AQUA	Blue 1	133	-
	Orange 2	38	-		Orange 2	86	-		Orange 2	134	-
	Green 3	39	-		Green 3	87	-		Green 3	135	-
	Brown 4	40	-		Brown 4	88	-		Brown 4	136	-
	Slate 5	41	-		Slate 5	89	-		Slate 5	137	-
	White 6	42	-		White 6	90	-		White 6	138	-
	Red 7	43	-		Red 7	91	-		Red 7	139	-
	Black 8	44	-		Black 8	92	-		Black 8	140	-
	Yellow 9	45	-		Yellow 9	93	-		Yellow 9	141	-
	Violet 10	46	-		Violet 10	94	-		Violet 10	142	-
	Rose 11	47	-		Rose 11	95	-		Rose 11	143	-
	Aqua 12	48	-		Aqua 12	96	-		Aqua 12	144	-

MODEL: 2D SHEET H
FILE NAME: C:\TRANSYSTEMS\PW_LOCAL\TRANSYSTEMS-PW-01\DMS32656\62R19-SHT-ITS-FIBER-12.DGN

ATLAS TECHNICAL CONSULTANTS, LLC
100 S. WACKER DRIVE, SUITE 400
CHICAGO, IL 60606

USER NAME = SALASL	DESIGNED - JAM	REVISED -	
	DRAWN - JAM	REVISED -	
PLOT SCALE = 0.16666667 ' / IN.	CHECKED - DJM	REVISED -	
PLOT DATE = 11/12/2025	DATE - 11/12/2025	REVISED -	

STATE OF ILLINOIS
DEPARTMENT OF TRANSPORTATION

I-80
TRUNK FIBER ASSIGNMENTS

SCALE: NONE | SHEET OF SHEETS | STA. TO STA.

F.A.I. RTE.	SECTION	COUNTY	TOTAL SHEETS	SHEET NO.
80	FAI 80 21 VLS	VARIOUS	467	419

CONTRACT NO. 62R19

ILLINOIS | FED. AID PROJECT

TRUNK CABLE FIBER ASSIGNMENTS								ORIGINATION	CMV-IE-WB-26D			
TRUNK CABLE DESIGNATION			TCF-IE-006					DESTINATION	EXISTING FO CABINET EAST OF US 30			
BUFFER TUBE	FIBER	FIBER NO	ASSIGNMENT	BUFFER TUBE	FIBER NO	FIBER NO	ASSIGNMENT		BUFFER TUBE		FIBER NO	ASSIGNMENT
BLUE	BLUE 1	1	-	SLATE	BLUE 1	49	-		YELLOW	BLUE 1	97	-
	ORANGE 2	2	-		ORANGE 2	50	-			ORANGE 2	98	-
	GREEN 3	3	-		GREEN 3	51	-			GREEN 3	99	-
	BROWN 4	4	-		BROWN 4	52	-			BROWN 4	100	-
	SLATE 5	5	-		SLATE 5	53	-			SLATE 5	101	-
	WHITE 6	6	-		WHITE 6	54	-			WHITE 6	102	-
	RED 7	7	-		RED 7	55	-			RED 7	103	-
	BLACK 8	8	-		BLACK 8	56	-			BLACK 8	104	-
	YELLOW 9	9	-		YELLOW 9	57	-			YELLOW 9	105	-
	VIOLET 10	10	-		VIOLET 10	58	-			VIOLET 10	106	-
	ROSE 11	11	-		ROSE 11	59	-			ROSE 11	107	-
	AQUA 12	12	-		AQUA 12	60	-			AQUA 12	108	-
ORANGE	BLUE 1	13	-	WHITE	BLUE 1	61	-		VIOLET	BLUE 1	109	-
	ORANGE 2	14	-		ORANGE 2	62	-			ORANGE 2	110	-
	GREEN 3	15	-		GREEN 3	63	-			GREEN 3	111	-
	BROWN 4	16	-		BROWN 4	64	-			BROWN 4	112	-
	SLATE 5	17	-		SLATE 5	65	-			SLATE 5	113	-
	WHITE 6	18	-		WHITE 6	66	-			WHITE 6	114	-
	RED 7	19	-		RED 7	67	-			RED 7	115	-
	BLACK 8	20	-		BLACK 8	68	-			BLACK 8	116	-
	YELLOW 9	21	-		YELLOW 9	69	-			YELLOW 9	117	-
	VIOLET 10	22	-		VIOLET 10	70	-			VIOLET 10	118	-
	ROSE 11	23	-		ROSE 11	71	-			ROSE 11	119	-
	AQUA 12	24	-		AQUA 12	72	-			AQUA 12	120	-
GREEN	BLUE 1	25	-	RED	BLUE 1	73	-		ROSE	BLUE 1	121	-
	ORANGE 2	26	-		ORANGE 2	74	-			ORANGE 2	122	-
	GREEN 3	27	-		GREEN 3	75	-			GREEN 3	123	-
	BROWN 4	28	-		BROWN 4	76	-			BROWN 4	124	-
	SLATE 5	29	-		SLATE 5	77	-			SLATE 5	125	-
	WHITE 6	30	-		WHITE 6	78	-			WHITE 6	126	-
	RED 7	31	-		RED 7	79	-			RED 7	127	-
	BLACK 8	32	-		BLACK 8	80	-			BLACK 8	128	-
	YELLOW 9	33	-		YELLOW 9	81	-			YELLOW 9	129	-
	VIOLET 10	34	-		VIOLET 10	82	-			VIOLET 10	130	-
	ROSE 11	35	-		ROSE 11	83	-			ROSE 11	131	-
	AQUA 12	36	-		AQUA 12	84	-			AQUA 12	132	-
BROWN	BLUE 1	37	-	BLACK	BLUE 1	85	-		AQUA	BLUE 1	133	-
	ORANGE 2	38	-		ORANGE 2	86	-			ORANGE 2	134	-
	GREEN 3	39	-		GREEN 3	87	-			GREEN 3	135	-
	BROWN 4	40	-		BROWN 4	88	-			BROWN 4	136	-
	SLATE 5	41	-		SLATE 5	89	-			SLATE 5	137	-
	WHITE 6	42	-		WHITE 6	90	-			WHITE 6	138	-
	RED 7	43	-		RED 7	91	-			RED 7	139	-
	BLACK 8	44	-		BLACK 8	92	-			BLACK 8	140	-
	YELLOW 9	45	-		YELLOW 9	93	-			YELLOW 9	141	-
	VIOLET 10	46	-		VIOLET 10	94	-			VIOLET 10	142	-
	ROSE 11	47	-		ROSE 11	95	-			ROSE 11	143	-
	AQUA 12	48	-		AQUA 12	96	-			AQUA 12	144	-

MODEL: 2D SHEET H
FILE NAME: C:\TRANSYSTEMS\PW_LOCAL\TRANSYSTEMS-PW-01\DMS32656\62R13-SHT-ITS-FIBER-13.DGN

ATLAS TECHNICAL CONSULTANTS, LLC
100 S. WACKER DRIVE, SUITE 400
CHICAGO, IL 60606

USER NAME = SALASL	DESIGNED - JAM	REVISED -	
	DRAWN - JAM	REVISED -	
PLOT SCALE = 0.16666667 ' / IN.	CHECKED - DJM	REVISED -	
PLOT DATE = 11/12/2025	DATE - 11/12/2025	REVISED -	

STATE OF ILLINOIS
DEPARTMENT OF TRANSPORTATION

I-80
TRUNK FIBER ASSIGNMENTS

SCALE: NONE | SHEET OF SHEETS | STA. TO STA.

F.A.I. RTE.	SECTION	COUNTY	TOTAL SHEETS	SHEET NO.
80	FAI 80 21 VLS	VARIOUS	467	420
		CONTRACT NO. 62R19		
	ILLINOIS	FED. AID PROJECT		

TRUNK CABLE FIBER ASSIGNMENTS		ORIGINATION	CMV-IE-WB-26D
TRUNK CABLE DESIGNATION	TCF-IE-006	DESTINATION	EXISTING FO CABINET EAST OF US 30

BUFFER TUBE	FIBER	FIBER NO	ASSIGNMENT	BUFFER TUBE	FIBER NO	FIBER NO	ASSIGNMENT	BUFFER TUBE		FIBER NO	ASSIGNMENT
BLUE	BLUE 1	145	-	SLATE	BLUE 1	193	-	YELLOW	BLUE 1	241	-
	ORANGE 2	146	-		ORANGE 2	194	-		ORANGE 2	242	-
	GREEN 3	147	-		GREEN 3	195	-		GREEN 3	243	-
	BROWN 4	148	-		BROWN 4	196	-		BROWN 4	244	-
	SLATE 5	149	-		SLATE 5	197	-		SLATE 5	245	-
	WHITE 6	150	-		WHITE 6	198	-		WHITE 6	246	-
	RED 7	151	-		RED 7	199	-		RED 7	247	-
	BLACK 8	152	-		BLACK 8	200	-		BLACK 8	248	-
	YELLOW 9	153	-		YELLOW 9	201	-		YELLOW 9	249	-
	VIOLET 10	154	-		VIOLET 10	202	-		VIOLET 10	250	-
	ROSE 11	155	-		ROSE 11	203	-		ROSE 11	251	-
	AQUA 12	156	-		AQUA 12	204	-		AQUA 12	252	-
ORANGE	BLUE 1	157	-	WHITE	BLUE 1	205	-	VIOLET	BLUE 1	253	-
	ORANGE 2	158	-		ORANGE 2	206	-		ORANGE 2	254	-
	GREEN 3	159	-		GREEN 3	207	-		GREEN 3	255	-
	BROWN 4	160	-		BROWN 4	208	-		BROWN 4	256	-
	SLATE 5	161	-		SLATE 5	209	-		SLATE 5	257	-
	WHITE 6	162	-		WHITE 6	210	-		WHITE 6	258	-
	RED 7	163	-		RED 7	211	-		RED 7	259	-
	BLACK 8	164	-		BLACK 8	212	-		BLACK 8	260	-
	YELLOW 9	165	-		YELLOW 9	213	-		YELLOW 9	261	-
	VIOLET 10	166	-		VIOLET 10	214	-		VIOLET 10	262	-
	ROSE 11	167	-		ROSE 11	215	-		ROSE 11	263	-
	AQUA 12	168	-		AQUA 12	216	-		AQUA 12	264	-
GREEN	BLUE 1	169	-	RED	BLUE 1	217	-	ROSE	BLUE 1	265	-
	ORANGE 2	170	-		ORANGE 2	218	-		ORANGE 2	266	-
	GREEN 3	171	-		GREEN 3	219	-		GREEN 3	267	-
	BROWN 4	172	-		BROWN 4	220	-		BROWN 4	268	-
	SLATE 5	173	-		SLATE 5	221	-		SLATE 5	269	-
	WHITE 6	174	-		WHITE 6	222	-		WHITE 6	270	-
	RED 7	175	-		RED 7	223	-		RED 7	271	-
	BLACK 8	176	-		BLACK 8	224	-		BLACK 8	272	-
	YELLOW 9	177	-		YELLOW 9	225	-		YELLOW 9	273	-
	VIOLET 10	178	-		VIOLET 10	226	-		VIOLET 10	274	-
	ROSE 11	179	-		ROSE 11	227	-		ROSE 11	275	-
	AQUA 12	180	-		AQUA 12	228	-		AQUA 12	276	-
BROWN	BLUE 1	181	-	BLACK	BLUE 1	229	-	AQUA	BLUE 1	277	-
	ORANGE 2	182	-		ORANGE 2	230	-		ORANGE 2	278	-
	GREEN 3	183	-		GREEN 3	231	-		GREEN 3	279	-
	BROWN 4	184	-		BROWN 4	232	-		BROWN 4	280	-
	SLATE 5	185	-		SLATE 5	233	-		SLATE 5	281	-
	WHITE 6	186	-		WHITE 6	234	-		WHITE 6	282	-
	RED 7	187	-		RED 7	235	-		RED 7	283	-
	BLACK 8	188	-		BLACK 8	236	-		BLACK 8	284	-
	YELLOW 9	189	-		YELLOW 9	237	-		YELLOW 9	285	-
	VIOLET 10	190	-		VIOLET 10	238	-		VIOLET 10	286	-
	ROSE 11	191	-		ROSE 11	239	-		ROSE 11	287	-
	AQUA 12	192	-		AQUA 12	240	-		AQUA 12	288	-

MODEL: 2D SHEET H
FILE NAME: C:\TRANSYSTEMS\PW_LOCAL\TRANSYSTEMS-PW-01\DMS32656\62R19-SHT-ITS-FIBER-14.DGN

ATLAS
ATLAS TECHNICAL CONSULTANTS, LLC
100 S. WACKER DRIVE, SUITE 400
CHICAGO, IL 60606

USER NAME = SALASL	DESIGNED - JAM	REVISED -	
	DRAWN - JAM	REVISED -	
PLOT SCALE = 0.16666667 ' / IN.	CHECKED - DJM	REVISED -	
PLOT DATE = 11/12/2025	DATE - 11/12/2025	REVISED -	

STATE OF ILLINOIS
DEPARTMENT OF TRANSPORTATION

I-80
TRUNK FIBER ASSIGNMENTS

SCALE: NONE | SHEET OF SHEETS | STA. TO STA.

F.A.I. RTE.	SECTION	COUNTY	TOTAL SHEETS	SHEET NO.
80	FAI 80 21 VLS	VARIOUS	467	421
		CONTRACT NO. 62R19		
	ILLINOIS	FED. AID PROJECT		

TRUNK CABLE FIBER ASSIGNMENTS		ORIGINATION	EXISTING FO CABINET EAST OF US 30
TRUNK CABLE DESIGNATION	TCF-IE-005	DESTINATION	EXISTING FO CABINET (I-355 & I-80)

BUFFER TUBE	FIBER	FIBER NO	ASSIGNMENT	BUFFER TUBE	FIBER NO	FIBER NO	ASSIGNMENT	BUFFER TUBE		FIBER NO	ASSIGNMENT
BLUE	BLUE 1	1	-	SLATE	BLUE 1	49	-	YELLOW	BLUE 1	97	-
	ORANGE 2	2	-		ORANGE 2	50	-		ORANGE 2	98	-
	GREEN 3	3	-		GREEN 3	51	-		GREEN 3	99	-
	BROWN 4	4	-		BROWN 4	52	-		BROWN 4	100	-
	SLATE 5	5	-		SLATE 5	53	-		SLATE 5	101	-
	WHITE 6	6	-		WHITE 6	54	-		WHITE 6	102	-
	RED 7	7	-		RED 7	55	-		RED 7	103	-
	BLACK 8	8	-		BLACK 8	56	-		BLACK 8	104	-
	YELLOW 9	9	-		YELLOW 9	57	-		YELLOW 9	105	-
	VIOLET 10	10	-		VIOLET 10	58	-		VIOLET 10	106	-
	ROSE 11	11	-		ROSE 11	59	-		ROSE 11	107	-
	AQUA 12	12	-		AQUA 12	60	-		AQUA 12	108	-
ORANGE	BLUE 1	13	-	WHITE	BLUE 1	61	-	VIOLET	BLUE 1	109	-
	ORANGE 2	14	-		ORANGE 2	62	-		ORANGE 2	110	-
	GREEN 3	15	-		GREEN 3	63	-		GREEN 3	111	-
	BROWN 4	16	-		BROWN 4	64	-		BROWN 4	112	-
	SLATE 5	17	-		SLATE 5	65	-		SLATE 5	113	-
	WHITE 6	18	-		WHITE 6	66	-		WHITE 6	114	-
	RED 7	19	-		RED 7	67	-		RED 7	115	-
	BLACK 8	20	-		BLACK 8	68	-		BLACK 8	116	-
	YELLOW 9	21	-		YELLOW 9	69	-		YELLOW 9	117	-
	VIOLET 10	22	-		VIOLET 10	70	-		VIOLET 10	118	-
	ROSE 11	23	-		ROSE 11	71	-		ROSE 11	119	-
	AQUA 12	24	-		AQUA 12	72	-		AQUA 12	120	-
GREEN	BLUE 1	25	-	RED	BLUE 1	73	-	ROSE	BLUE 1	121	-
	ORANGE 2	26	-		ORANGE 2	74	-		ORANGE 2	122	-
	GREEN 3	27	-		GREEN 3	75	-		GREEN 3	123	-
	BROWN 4	28	-		BROWN 4	76	-		BROWN 4	124	-
	SLATE 5	29	-		SLATE 5	77	-		SLATE 5	125	-
	WHITE 6	30	-		WHITE 6	78	-		WHITE 6	126	-
	RED 7	31	-		RED 7	79	-		RED 7	127	-
	BLACK 8	32	-		BLACK 8	80	-		BLACK 8	128	-
	YELLOW 9	33	-		YELLOW 9	81	-		YELLOW 9	129	-
	VIOLET 10	34	-		VIOLET 10	82	-		VIOLET 10	130	-
	ROSE 11	35	-		ROSE 11	83	-		ROSE 11	131	-
	AQUA 12	36	-		AQUA 12	84	-		AQUA 12	132	-
BROWN	BLUE 1	37	-	BLACK	BLUE 1	85	-	AQUA	BLUE 1	133	-
	ORANGE 2	38	-		ORANGE 2	86	-		ORANGE 2	134	-
	GREEN 3	39	-		GREEN 3	87	-		GREEN 3	135	-
	BROWN 4	40	-		BROWN 4	88	-		BROWN 4	136	-
	SLATE 5	41	-		SLATE 5	89	-		SLATE 5	137	-
	WHITE 6	42	-		WHITE 6	90	-		WHITE 6	138	-
	RED 7	43	-		RED 7	91	-		RED 7	139	-
	BLACK 8	44	-		BLACK 8	92	-		BLACK 8	140	-
	YELLOW 9	45	-		YELLOW 9	93	-		YELLOW 9	141	-
	VIOLET 10	46	-		VIOLET 10	94	-		VIOLET 10	142	-
	ROSE 11	47	-		ROSE 11	95	-		ROSE 11	143	-
	AQUA 12	48	-		AQUA 12	96	-		AQUA 12	144	-

MODEL: 2D SHEET H
FILE NAME: C:\TRANSYSTEMS\PW_LOCAL\TRANSYSTEMS-PW-01\DMS32656\62R19-SHT-ITS-FIBER-15.DGN

ATLAS TECHNICAL CONSULTANTS, LLC
100 S. WACKER DRIVE, SUITE 400
CHICAGO, IL 60606

USER NAME = SALASL	DESIGNED - JAM	REVISED -	
	DRAWN - JAM	REVISED -	
PLOT SCALE = 0.16666667 ' / IN.	CHECKED - DJM	REVISED -	
PLOT DATE = 11/12/2025	DATE - 11/12/2025	REVISED -	

STATE OF ILLINOIS
DEPARTMENT OF TRANSPORTATION

I-80
TRUNK FIBER ASSIGNMENTS

SCALE: NONE | SHEET OF SHEETS | STA. TO STA.

F.A.I. RTE.	SECTION	COUNTY	TOTAL SHEETS	SHEET NO.
80	FAI 80 21 VLS	VARIOUS	467	422

CONTRACT NO. 62R19
ILLINOIS | FED. AID PROJECT

TRUNK CABLE FIBER ASSIGNMENTS		ORIGINATION	EXISTING FO CABINET EAST OF US 30
TRUNK CABLE DESIGNATION	TCF-IE-005	DESTINATION	EXISTING FO CABINET (I-355 & I-80)

BUFFER TUBE	FIBER	FIBER NO	ASSIGNMENT	BUFFER TUBE	FIBER NO	FIBER NO	ASSIGNMENT	BUFFER TUBE		FIBER NO	ASSIGNMENT
BLUE	BLUE 1	145	-	SLATE	BLUE 1	193	-	YELLOW	BLUE 1	241	-
	ORANGE 2	146	-		ORANGE 2	194	-		ORANGE 2	242	-
	GREEN 3	147	-		GREEN 3	195	-		GREEN 3	243	-
	BROWN 4	148	-		BROWN 4	196	-		BROWN 4	244	-
	SLATE 5	149	-		SLATE 5	197	-		SLATE 5	245	-
	WHITE 6	150	-		WHITE 6	198	-		WHITE 6	246	-
	RED 7	151	-		RED 7	199	-		RED 7	247	-
	BLACK 8	152	-		BLACK 8	200	-		BLACK 8	248	-
	YELLOW 9	153	-		YELLOW 9	201	-		YELLOW 9	249	-
	VIOLET 10	154	-		VIOLET 10	202	-		VIOLET 10	250	-
	ROSE 11	155	-		ROSE 11	203	-		ROSE 11	251	-
	AQUA 12	156	-		AQUA 12	204	-		AQUA 12	252	-
ORANGE	BLUE 1	157	-	WHITE	BLUE 1	205	-	VIOLET	BLUE 1	253	-
	ORANGE 2	158	-		ORANGE 2	206	-		ORANGE 2	254	-
	GREEN 3	159	-		GREEN 3	207	-		GREEN 3	255	-
	BROWN 4	160	-		BROWN 4	208	-		BROWN 4	256	-
	SLATE 5	161	-		SLATE 5	209	-		SLATE 5	257	-
	WHITE 6	162	-		WHITE 6	210	-		WHITE 6	258	-
	RED 7	163	-		RED 7	211	-		RED 7	259	-
	BLACK 8	164	-		BLACK 8	212	-		BLACK 8	260	-
	YELLOW 9	165	-		YELLOW 9	213	-		YELLOW 9	261	-
	VIOLET 10	166	-		VIOLET 10	214	-		VIOLET 10	262	-
	ROSE 11	167	-		ROSE 11	215	-		ROSE 11	263	-
	AQUA 12	168	-		AQUA 12	216	-		AQUA 12	264	-
GREEN	BLUE 1	169	-	RED	BLUE 1	217	-	ROSE	BLUE 1	265	-
	ORANGE 2	170	-		ORANGE 2	218	-		ORANGE 2	266	-
	GREEN 3	171	-		GREEN 3	219	-		GREEN 3	267	-
	BROWN 4	172	-		BROWN 4	220	-		BROWN 4	268	-
	SLATE 5	173	-		SLATE 5	221	-		SLATE 5	269	-
	WHITE 6	174	-		WHITE 6	222	-		WHITE 6	270	-
	RED 7	175	-		RED 7	223	-		RED 7	271	-
	BLACK 8	176	-		BLACK 8	224	-		BLACK 8	272	-
	YELLOW 9	177	-		YELLOW 9	225	-		YELLOW 9	273	-
	VIOLET 10	178	-		VIOLET 10	226	-		VIOLET 10	274	-
	ROSE 11	179	-		ROSE 11	227	-		ROSE 11	275	-
	AQUA 12	180	-		AQUA 12	228	-		AQUA 12	276	-
BROWN	BLUE 1	181	-	BLACK	BLUE 1	229	-	AQUA	BLUE 1	277	-
	ORANGE 2	182	-		ORANGE 2	230	-		ORANGE 2	278	-
	GREEN 3	183	-		GREEN 3	231	-		GREEN 3	279	-
	BROWN 4	184	-		BROWN 4	232	-		BROWN 4	280	-
	SLATE 5	185	-		SLATE 5	233	-		SLATE 5	281	-
	WHITE 6	186	-		WHITE 6	234	-		WHITE 6	282	-
	RED 7	187	-		RED 7	235	-		RED 7	283	-
	BLACK 8	188	-		BLACK 8	236	-		BLACK 8	284	-
	YELLOW 9	189	-		YELLOW 9	237	-		YELLOW 9	285	-
	VIOLET 10	190	-		VIOLET 10	238	-		VIOLET 10	286	-
	ROSE 11	191	-		ROSE 11	239	-		ROSE 11	287	-
	AQUA 12	192	-		AQUA 12	240	-		AQUA 12	288	-

MODEL: 2D SHEET H
FILE NAME: C:\TRANSYSTEMS\PW_LOCAL\TRANSYSTEMS-PW-01\DMS32656\62R19-SHT-ITS-FIBER-16.DGN

ATLAS TECHNICAL CONSULTANTS, LLC
100 S. WACKER DRIVE, SUITE 400
CHICAGO, IL 60606

USER NAME = SALASL	DESIGNED - JAM	REVISED -	
	DRAWN - JAM	REVISED -	
PLOT SCALE = 0.16666667 ' / IN.	CHECKED - DJM	REVISED -	
PLOT DATE = 11/12/2025	DATE - 11/12/2025	REVISED -	

STATE OF ILLINOIS
DEPARTMENT OF TRANSPORTATION

I-80
TRUNK FIBER ASSIGNMENTS

SCALE: NONE | SHEET OF SHEETS | STA. TO STA.

F.A.I. RTE.	SECTION	COUNTY	TOTAL SHEETS	SHEET NO.
80	FAI 80 21 VLS	VARIOUS	467	423

CONTRACT NO. 62R19
ILLINOIS | FED. AID PROJECT

DISTRIBUTION CABLE FIBER ASSIGNMENTS		ORIGINATION	FO INTERCONNECT CABINET, STA 205+08
DISTRIBUTION CABLE DESIGNATION	DCF-IE-WB-013	DESTINATION	CMV-IE-WB-40B

BUFFER TUBE	FIBER	FIBER NO	ASSIGNMENT	BUFFER TUBE	FIBER NO	FIBER NO	ASSIGNMENT	BUFFER TUBE	FIBER	FIBER NO	ASSIGNMENT
BLUE	Blue 1	1	-	SLATE	Blue 1	49	-	YELLOW	Blue 1	97	-
	Orange 2	2	-		Orange 2	50	-		Orange 2	98	-
	Green 3	3	-		Green 3	51	-		Green 3	99	-
	Brown 4	4	-		Brown 4	52	-		Brown 4	100	-
	Slate 5	5	-		Slate 5	53	-		Slate 5	101	-
	White 6	6	-		White 6	54	-		White 6	102	-
	Red 7	7	-		Red 7	55	-		Red 7	103	-
	Black 8	8	-		Black 8	56	-		Black 8	104	-
	Yellow 9	9	-		Yellow 9	57	-		Yellow 9	105	-
	Violet 10	10	-		Violet 10	58	-		Violet 10	106	-
	Rose 11	11	-		Rose 11	59	-		Rose 11	107	-
	Aqua 12	12	-		Aqua 12	60	-		Aqua 12	108	-
ORANGE	Blue 1	13	-	WHITE	Blue 1	61	-	VIOLET	Blue 1	109	-
	Orange 2	14	-		Orange 2	62	-		Orange 2	110	-
	Green 3	15	-		Green 3	63	-		Green 3	111	-
	Brown 4	16	-		Brown 4	64	-		Brown 4	112	-
	Slate 5	17	-		Slate 5	65	-		Slate 5	113	-
	White 6	18	-		White 6	66	-		White 6	114	-
	Red 7	19	-		Red 7	67	-		Red 7	115	-
	Black 8	20	-		Black 8	68	-		Black 8	116	-
	Yellow 9	21	-		Yellow 9	69	-		Yellow 9	117	-
	Violet 10	22	-		Violet 10	70	-		Violet 10	118	-
	Rose 11	23	-		Rose 11	71	-		Rose 11	119	-
	Aqua 12	24	-		Aqua 12	72	-		Aqua 12	120	-
GREEN	Blue 1	25	-	RED	Blue 1	73	-	ROSE	Blue 1	121	-
	Orange 2	26	-		Orange 2	74	-		Orange 2	122	-
	Green 3	27	-		Green 3	75	-		Green 3	123	-
	Brown 4	28	-		Brown 4	76	-		Brown 4	124	-
	Slate 5	29	-		Slate 5	77	-		Slate 5	125	-
	White 6	30	-		White 6	78	-		White 6	126	-
	Red 7	31	-		Red 7	79	-		Red 7	127	-
	Black 8	32	-		Black 8	80	-		Black 8	128	-
	Yellow 9	33	-		Yellow 9	81	-		Yellow 9	129	-
	Violet 10	34	-		Violet 10	82	-		Violet 10	130	-
	Rose 11	35	-		Rose 11	83	-		Rose 11	131	-
	Aqua 12	36	-		Aqua 12	84	-		Aqua 12	132	-
BROWN	Blue 1	37	-	BLACK	Blue 1	85	-	AQUA	Blue 1	133	-
	Orange 2	38	-		Orange 2	86	-		Orange 2	134	-
	Green 3	39	-		Green 3	87	-		Green 3	135	-
	Brown 4	40	-		Brown 4	88	-		Brown 4	136	-
	Slate 5	41	-		Slate 5	89	-		Slate 5	137	-
	White 6	42	-		White 6	90	-		White 6	138	-
	Red 7	43	-		Red 7	91	-		Red 7	139	-
	Black 8	44	-		Black 8	92	-		Black 8	140	-
	Yellow 9	45	-		Yellow 9	93	-		Yellow 9	141	-
	Violet 10	46	-		Violet 10	94	-		Violet 10	142	-
	Rose 11	47	-		Rose 11	95	-		Rose 11	143	-
	Aqua 12	48	-		Aqua 12	96	-		Aqua 12	144	-

MODEL: 2D SHEET H
FILE NAME: C:\TRANSYSTEMS\PW_LOCAL\TRANSYSTEMS-PW-01\DMS32656\62R19-SHT-ITS-FIBER-17.DGN

ATLAS TECHNICAL CONSULTANTS, LLC
100 S. WACKER DRIVE, SUITE 400
CHICAGO, IL 60606

USER NAME = SALASL	DESIGNED - JAM	REVISED -	
	DRAWN - JAM	REVISED -	
PLOT SCALE = 0.16666667 ' / IN.	CHECKED - DJM	REVISED -	
PLOT DATE = 11/12/2025	DATE - 11/12/2025	REVISED -	

STATE OF ILLINOIS
DEPARTMENT OF TRANSPORTATION

I-80
DISTRIBUTION FIBER ASSIGNMENTS

SCALE: NONE | SHEET OF SHEETS | STA. TO STA.

F.A.I. RTE.	SECTION	COUNTY	TOTAL SHEETS	SHEET NO.
80	FAI 80 21 VLS	VARIOUS	467	424

CONTRACT NO. 62R19
ILLINOIS | FED. AID PROJECT

DISTRIBUTION CABLE FIBER ASSIGNMENTS		ORIGINATION	FO INTERCONNECT CABINET, STA 205+08
DISTRIBUTION CABLE DESIGNATION	DCF-IE-EB-013	DESTINATION	CMV-IE-EB-40C

BUFFER TUBE	FIBER	FIBER NO	ASSIGNMENT	BUFFER TUBE	FIBER NO	FIBER NO	ASSIGNMENT	BUFFER TUBE	FIBER	FIBER NO	ASSIGNMENT
BLUE	Blue 1	1	-	SLATE	Blue 1	49	-	YELLOW	Blue 1	97	-
	Orange 2	2	-		Orange 2	50	-		Orange 2	98	-
	Green 3	3	-		Green 3	51	-		Green 3	99	-
	Brown 4	4	-		Brown 4	52	-		Brown 4	100	-
	Slate 5	5	-		Slate 5	53	-		Slate 5	101	-
	White 6	6	-		White 6	54	-		White 6	102	-
	Red 7	7	-		Red 7	55	-		Red 7	103	-
	Black 8	8	-		Black 8	56	-		Black 8	104	-
	Yellow 9	9	-		Yellow 9	57	-		Yellow 9	105	-
	Violet 10	10	-		Violet 10	58	-		Violet 10	106	-
	Rose 11	11	-		Rose 11	59	-		Rose 11	107	-
	Aqua 12	12	-		Aqua 12	60	-		Aqua 12	108	-
ORANGE	Blue 1	13	-	WHITE	Blue 1	61	-	VIOLET	Blue 1	109	-
	Orange 2	14	-		Orange 2	62	-		Orange 2	110	-
	Green 3	15	-		Green 3	63	-		Green 3	111	-
	Brown 4	16	-		Brown 4	64	-		Brown 4	112	-
	Slate 5	17	IE40*		Slate 5	65	-		Slate 5	113	-
	White 6	18	IE40*		White 6	66	-		White 6	114	-
	Red 7	19	IE40*		Red 7	67	-		Red 7	115	-
	Black 8	20	IE40*		Black 8	68	-		Black 8	116	-
	Yellow 9	21	IE40A*		Yellow 9	69	-		Yellow 9	117	-
	Violet 10	22	IE40A*		Violet 10	70	-		Violet 10	118	-
	Rose 11	23	IE40A*		Rose 11	71	-		Rose 11	119	-
	Aqua 12	24	IE40A*		Aqua 12	72	-		Aqua 12	120	-
GREEN	Blue 1	25	-	RED	Blue 1	73	-	ROSE	Blue 1	121	-
	Orange 2	26	-		Orange 2	74	-		Orange 2	122	-
	Green 3	27	-		Green 3	75	-		Green 3	123	-
	Brown 4	28	-		Brown 4	76	-		Brown 4	124	-
	Slate 5	29	-		Slate 5	77	-		Slate 5	125	-
	White 6	30	-		White 6	78	-		White 6	126	-
	Red 7	31	-		Red 7	79	-		Red 7	127	-
	Black 8	32	-		Black 8	80	-		Black 8	128	-
	Yellow 9	33	-		Yellow 9	81	-		Yellow 9	129	-
	Violet 10	34	-		Violet 10	82	-		Violet 10	130	-
	Rose 11	35	-		Rose 11	83	-		Rose 11	131	-
	Aqua 12	36	-		Aqua 12	84	-		Aqua 12	132	-
BROWN	Blue 1	37	-	BLACK	Blue 1	85	-	AQUA	Blue 1	133	-
	Orange 2	38	-		Orange 2	86	-		Orange 2	134	-
	Green 3	39	-		Green 3	87	-		Green 3	135	-
	Brown 4	40	-		Brown 4	88	-		Brown 4	136	-
	Slate 5	41	-		Slate 5	89	-		Slate 5	137	-
	White 6	42	-		White 6	90	-		White 6	138	-
	Red 7	43	-		Red 7	91	-		Red 7	139	-
	Black 8	44	-		Black 8	92	-		Black 8	140	-
	Yellow 9	45	-		Yellow 9	93	-		Yellow 9	141	-
	Violet 10	46	-		Violet 10	94	-		Violet 10	142	-
	Rose 11	47	-		Rose 11	95	-		Rose 11	143	-
	Aqua 12	48	-		Aqua 12	96	-		Aqua 12	144	-

*INDICATES LOCATION IS SPLICED WITHIN DCF-IE-EB-013 SEGMENT.

MODEL: 2D SHEET H
FILE NAME: C:\TRANSYSTEMS\PW_LOCAL\TRANSYSTEMS-PW-01\DMS32656\62R19-SHT-ITS-FIBER-18.DGN

ATLAS TECHNICAL CONSULTANTS, LLC
100 S. WACKER DRIVE, SUITE 400
CHICAGO, IL 60606

USER NAME = SALASL	DESIGNED - JAM	REVISED -	
	DRAWN - JAM	REVISED -	
PLOT SCALE = 0.16666667 ' / IN.	CHECKED - DJM	REVISED -	
PLOT DATE = 11/12/2025	DATE - 11/12/2025	REVISED -	

STATE OF ILLINOIS
DEPARTMENT OF TRANSPORTATION

I-80
DISTRIBUTION FIBER ASSIGNMENTS

SCALE: NONE | SHEET OF SHEETS | STA. TO STA.

F.A.I. RTE.	SECTION	COUNTY	TOTAL SHEETS	SHEET NO.
80	FAI 80 21 VLS	VARIOUS	467	425
		CONTRACT NO. 62R19		
	ILLINOIS	FED. AID PROJECT		

DISTRIBUTION CABLE FIBER ASSIGNMENTS		ORIGINATION	FO INTERCONNECT CABINET, STA 205+08
DISTRIBUTION CABLE DESIGNATION	DCF-IE-WB-012	DESTINATION	PROPOSED COMMUNICATIONS HUT

BUFFER TUBE	FIBER	FIBER NO	ASSIGNMENT	BUFFER TUBE	FIBER NO	FIBER NO	ASSIGNMENT	BUFFER TUBE	FIBER	FIBER NO	ASSIGNMENT
BLUE	Blue 1	1	IE38*	SLATE	Blue 1	49	-	YELLOW	Blue 1	97	-
	Orange 2	2	IE38*		Orange 2	50	-		Orange 2	98	-
	Green 3	3	IE38*		Green 3	51	-		Green 3	99	-
	Brown 4	4	IE38*		Brown 4	52	-		Brown 4	100	-
	Slate 5	5	IE38A*		Slate 5	53	-		Slate 5	101	-
	White 6	6	IE38A*		White 6	54	-		White 6	102	-
	Red 7	7	IE38A*		Red 7	55	-		Red 7	103	-
	Black 8	8	IE38A*		Black 8	56	-		Black 8	104	-
	Yellow 9	9	IE38B*		Yellow 9	57	-		Yellow 9	105	-
	Violet 10	10	IE38B*		Violet 10	58	-		Violet 10	106	-
	Rose 11	11	IE38B*		Rose 11	59	-		Rose 11	107	-
	Aqua 12	12	IE38B*		Aqua 12	60	-		Aqua 12	108	-
ORANGE	Blue 1	13	IE37D (REDUNDANT PATH)	WHITE	Blue 1	61	-	VIOLET	Blue 1	109	-
	Orange 2	14	IE37D (REDUNDANT PATH)		Orange 2	62	-		Orange 2	110	-
	Green 3	15	IE37D (REDUNDANT PATH)		Green 3	63	-		Green 3	111	-
	Brown 4	16	IE37D (REDUNDANT PATH)		Brown 4	64	-		Brown 4	112	-
	Slate 5	17	IE39 (REDUNDANT PATH)		Slate 5	65	-		Slate 5	113	-
	White 6	18	IE39 (REDUNDANT PATH)		White 6	66	-		White 6	114	-
	Red 7	19	IE39 (REDUNDANT PATH)		Red 7	67	-		Red 7	115	-
	Black 8	20	IE39 (REDUNDANT PATH)		Black 8	68	-		Black 8	116	-
	Yellow 9	21	IE39A (REDUNDANT PATH)		Yellow 9	69	-		Yellow 9	117	-
	Violet 10	22	IE39A (REDUNDANT PATH)		Violet 10	70	-		Violet 10	118	-
	Rose 11	23	IE39A (REDUNDANT PATH)		Rose 11	71	-		Rose 11	119	-
	Aqua 12	24	IE39A (REDUNDANT PATH)		Aqua 12	72	-		Aqua 12	120	-
GREEN	Blue 1	25	IE39B (REDUNDANT PATH)	RED	Blue 1	73	-	ROSE	Blue 1	121	-
	Orange 2	26	IE39B (REDUNDANT PATH)		Orange 2	74	-		Orange 2	122	-
	Green 3	27	IE39B (REDUNDANT PATH)		Green 3	75	-		Green 3	123	-
	Brown 4	28	IE39B (REDUNDANT PATH)		Brown 4	76	-		Brown 4	124	-
	Slate 5	29	IE40 (REDUNDANT PATH)		Slate 5	77	-		Slate 5	125	-
	White 6	30	IE40 (REDUNDANT PATH)		White 6	78	-		White 6	126	-
	Red 7	31	IE40A (REDUNDANT PATH)		Red 7	79	-		Red 7	127	-
	Black 8	32	IE40A (REDUNDANT PATH)		Black 8	80	-		Black 8	128	-
	Yellow 9	33	DMS46 (REDUNDANT PATH)		Yellow 9	81	-		Yellow 9	129	-
	Violet 10	34	DMS46 (REDUNDANT PATH)		Violet 10	82	-		Violet 10	130	-
	Rose 11	35	DMS46 (REDUNDANT PATH)		Rose 11	83	-		Rose 11	131	-
	Aqua 12	36	DMS46 (REDUNDANT PATH)		Aqua 12	84	-		Aqua 12	132	-
BROWN	Blue 1	37	-	BLACK	Blue 1	85	-	AQUA	Blue 1	133	-
	Orange 2	38	-		Orange 2	86	-		Orange 2	134	-
	Green 3	39	-		Green 3	87	-		Green 3	135	-
	Brown 4	40	-		Brown 4	88	-		Brown 4	136	-
	Slate 5	41	-		Slate 5	89	-		Slate 5	137	-
	White 6	42	-		White 6	90	-		White 6	138	-
	Red 7	43	-		Red 7	91	-		Red 7	139	-
	Black 8	44	-		Black 8	92	-		Black 8	140	-
	Yellow 9	45	-		Yellow 9	93	-		Yellow 9	141	-
	Violet 10	46	-		Violet 10	94	-		Violet 10	142	-
	Rose 11	47	-		Rose 11	95	-		Rose 11	143	-
	Aqua 12	48	-		Aqua 12	96	-		Aqua 12	144	-

*INDICATES LOCATION IS SPLICED WITHIN DCF-IE-WB-012 SEGMENT.

MODEL: 2D SHEET H
FILE NAME: C:\TRANSYSTEMS\PW_LOCAL\TRANSYSTEMS-PW-01\DMS32656\62R19-SHT-ITS-FIBER-19.DGN

ATLAS TECHNICAL CONSULTANTS, LLC
100 S. WACKER DRIVE, SUITE 400
CHICAGO, IL 60606

USER NAME = SALASL	DESIGNED - JAM	REVISED -	
	DRAWN - JAM	REVISED -	
PLOT SCALE = 0.16666667 ' / IN.	CHECKED - DJM	REVISED -	
PLOT DATE = 11/12/2025	DATE - 11/12/2025	REVISED -	

STATE OF ILLINOIS
DEPARTMENT OF TRANSPORTATION

I-80
DISTRIBUTION FIBER ASSIGNMENTS

SCALE: NONE | SHEET OF SHEETS | STA. TO STA.

F.A.I. RTE.	SECTION	COUNTY	TOTAL SHEETS	SHEET NO.
80	FAI 80 21 VLS	VARIOUS	467	426

CONTRACT NO. 62R19
ILLINOIS | FED. AID PROJECT

DISTRIBUTION CABLE FIBER ASSIGNMENTS		ORIGINATION	FO INTERCONNECT CABINET, STA 205+08
DISTRIBUTION CABLE DESIGNATION	DCF-IE-EB-012	DESTINATION	PROPOSED I-80 COMMUNICATIONS HUT

BUFFER TUBE	FIBER	FIBER NO	ASSIGNMENT	BUFFER TUBE	FIBER NO	FIBER NO	ASSIGNMENT	BUFFER TUBE	FIBER	FIBER NO	ASSIGNMENT
BLUE	Blue 1	1	IE37D*	SLATE	Blue 1	49	-	YELLOW	Blue 1	97	-
	Orange 2	2	IE37D*		Orange 2	50	-		Orange 2	98	-
	Green 3	3	IE37D*		Green 3	51	-		Green 3	99	-
	Brown 4	4	IE37D*		Brown 4	52	-		Brown 4	100	-
	Slate 5	5	IE39*		Slate 5	53	-		Slate 5	101	-
	White 6	6	IE39*		White 6	54	-		White 6	102	-
	Red 7	7	IE39*		Red 7	55	-		Red 7	103	-
	Black 8	8	IE39*		Black 8	56	-		Black 8	104	-
	Yellow 9	9	IE39A*		Yellow 9	57	-		Yellow 9	105	-
	Violet 10	10	IE39A*		Violet 10	58	-		Violet 10	106	-
	Rose 11	11	IE39A*		Rose 11	59	-		Rose 11	107	-
	Aqua 12	12	IE39A*		Aqua 12	60	-		Aqua 12	108	-
ORANGE	Blue 1	13	IE39B*	WHITE	Blue 1	61	-	VIOLET	Blue 1	109	-
	Orange 2	14	IE39B*		Orange 2	62	-		Orange 2	110	-
	Green 3	15	IE39B*		Green 3	63	-		Green 3	111	-
	Brown 4	16	IE39B*		Brown 4	64	-		Brown 4	112	-
	Slate 5	17	IE40		Slate 5	65	-		Slate 5	113	-
	White 6	18	IE40		White 6	66	-		White 6	114	-
	Red 7	19	-		Red 7	67	-		Red 7	115	-
	Black 8	20	-		Black 8	68	-		Black 8	116	-
	Yellow 9	21	IE40A		Yellow 9	69	-		Yellow 9	117	-
	Violet 10	22	IE40A		Violet 10	70	-		Violet 10	118	-
	Rose 11	23	-		Rose 11	71	-		Rose 11	119	-
	Aqua 12	24	-		Aqua 12	72	-		Aqua 12	120	-
GREEN	Blue 1	25	DMS46*	RED	Blue 1	73	-	ROSE	Blue 1	121	-
	Orange 2	26	DMS46*		Orange 2	74	-		Orange 2	122	-
	Green 3	27	DMS46*		Green 3	75	-		Green 3	123	-
	Brown 4	28	DMS46*		Brown 4	76	-		Brown 4	124	-
	Slate 5	29	IE38 (REDUNDANT PATH)		Slate 5	77	-		Slate 5	125	-
	White 6	30	IE38 (REDUNDANT PATH)		White 6	78	-		White 6	126	-
	Red 7	31	IE38 (REDUNDANT PATH)		Red 7	79	-		Red 7	127	-
	Black 8	32	IE38 (REDUNDANT PATH)		Black 8	80	-		Black 8	128	-
	Yellow 9	33	IE38A (REDUNDANT PATH)		Yellow 9	81	-		Yellow 9	129	-
	Violet 10	34	IE38A (REDUNDANT PATH)		Violet 10	82	-		Violet 10	130	-
	Rose 11	35	IE38A (REDUNDANT PATH)		Rose 11	83	-		Rose 11	131	-
	Aqua 12	36	IE38A (REDUNDANT PATH)		Aqua 12	84	-		Aqua 12	132	-
BROWN	Blue 1	37	IE38B (REDUNDANT PATH)	BLACK	Blue 1	85	-	AQUA	Blue 1	133	-
	Orange 2	38	IE38B (REDUNDANT PATH)		Orange 2	86	-		Orange 2	134	-
	Green 3	39	IE38B (REDUNDANT PATH)		Green 3	87	-		Green 3	135	-
	Brown 4	40	IE38B (REDUNDANT PATH)		Brown 4	88	-		Brown 4	136	-
	Slate 5	41	-		Slate 5	89	-		Slate 5	137	-
	White 6	42	-		White 6	90	-		White 6	138	-
	Red 7	43	-		Red 7	91	-		Red 7	139	-
	Black 8	44	-		Black 8	92	-		Black 8	140	-
	Yellow 9	45	-		Yellow 9	93	-		Yellow 9	141	-
	Violet 10	46	-		Violet 10	94	-		Violet 10	142	-
	Rose 11	47	-		Rose 11	95	-		Rose 11	143	-
	Aqua 12	48	-		Aqua 12	96	-		Aqua 12	144	-

*INDICATES LOCATION IS SPLICED WITHIN DCF-IE-EB-012 SEGMENT.

MODEL: 2D SHEET H
FILE NAME: C:\TRANSYSTEMS\PW_LOCAL\TRANSYSTEMS-PW-01\DMS32656\62R19-SHT-ITS-FIBER-2D.DGN

ATLAS TECHNICAL CONSULTANTS, LLC
100 S. WACKER DRIVE, SUITE 400
CHICAGO, IL 60606

USER NAME = SALASL	DESIGNED - JAM	REVISED -	
	DRAWN - JAM	REVISED -	
PLOT SCALE = 0.16666667 ' / IN.	CHECKED - DJM	REVISED -	
PLOT DATE = 11/12/2025	DATE - 11/12/2025	REVISED -	

STATE OF ILLINOIS
DEPARTMENT OF TRANSPORTATION

I-80
DISTRIBUTION FIBER ASSIGNMENTS

SCALE: NONE | SHEET OF SHEETS | STA. TO STA.

F.A.I. RTE.	SECTION	COUNTY	TOTAL SHEETS	SHEET NO.
80	FAI 80 21 VLS	VARIOUS	467	427

CONTRACT NO. 62R19
ILLINOIS | FED. AID PROJECT

DISTRIBUTION CABLE FIBER ASSIGNMENTS		ORIGINATION	PROPOSED I-80 COMMUNICATIONS HUT
DISTRIBUTION CABLE DESIGNATION	DCF-IE-WB-011	DESTINATION	CMV-IE-WB-37C

BUFFER TUBE	FIBER	FIBER NO	ASSIGNMENT	BUFFER TUBE	FIBER NO	FIBER NO	ASSIGNMENT	BUFFER TUBE	FIBER	FIBER NO	ASSIGNMENT
BLUE	Blue 1	1	-	SLATE	Blue 1	49	-	YELLOW	Blue 1	97	-
	Orange 2	2	-		Orange 2	50	-		Orange 2	98	-
	Green 3	3	-		Green 3	51	-		Green 3	99	-
	Brown 4	4	-		Brown 4	52	-		Brown 4	100	-
	Slate 5	5	-		Slate 5	53	-		Slate 5	101	-
	White 6	6	-		White 6	54	-		White 6	102	-
	Red 7	7	-		Red 7	55	-		Red 7	103	-
	Black 8	8	-		Black 8	56	-		Black 8	104	-
	Yellow 9	9	-		Yellow 9	57	-		Yellow 9	105	-
	Violet 10	10	-		Violet 10	58	-		Violet 10	106	-
	Rose 11	11	-		Rose 11	59	-		Rose 11	107	-
	Aqua 12	12	-		Aqua 12	60	-		Aqua 12	108	-
ORANGE	Blue 1	13	-	WHITE	Blue 1	61	-	VIOLET	Blue 1	109	-
	Orange 2	14	-		Orange 2	62	-		Orange 2	110	-
	Green 3	15	-		Green 3	63	-		Green 3	111	-
	Brown 4	16	-		Brown 4	64	-		Brown 4	112	-
	Slate 5	17	-		Slate 5	65	-		Slate 5	113	-
	White 6	18	-		White 6	66	-		White 6	114	-
	Red 7	19	-		Red 7	67	-		Red 7	115	-
	Black 8	20	-		Black 8	68	-		Black 8	116	-
	Yellow 9	21	-		Yellow 9	69	-		Yellow 9	117	-
	Violet 10	22	-		Violet 10	70	-		Violet 10	118	-
	Rose 11	23	-		Rose 11	71	-		Rose 11	119	-
	Aqua 12	24	-		Aqua 12	72	-		Aqua 12	120	-
GREEN	Blue 1	25	-	RED	Blue 1	73	-	ROSE	Blue 1	121	-
	Orange 2	26	-		Orange 2	74	-		Orange 2	122	-
	Green 3	27	-		Green 3	75	-		Green 3	123	-
	Brown 4	28	-		Brown 4	76	-		Brown 4	124	-
	Slate 5	29	-		Slate 5	77	-		Slate 5	125	-
	White 6	30	-		White 6	78	-		White 6	126	-
	Red 7	31	-		Red 7	79	-		Red 7	127	-
	Black 8	32	-		Black 8	80	-		Black 8	128	-
	Yellow 9	33	-		Yellow 9	81	-		Yellow 9	129	-
	Violet 10	34	-		Violet 10	82	-		Violet 10	130	-
	Rose 11	35	-		Rose 11	83	-		Rose 11	131	-
	Aqua 12	36	-		Aqua 12	84	-		Aqua 12	132	-
BROWN	Blue 1	37	-	BLACK	Blue 1	85	-	AQUA	Blue 1	133	-
	Orange 2	38	-		Orange 2	86	-		Orange 2	134	-
	Green 3	39	-		Green 3	87	-		Green 3	135	-
	Brown 4	40	-		Brown 4	88	-		Brown 4	136	-
	Slate 5	41	-		Slate 5	89	-		Slate 5	137	-
	White 6	42	-		White 6	90	-		White 6	138	-
	Red 7	43	-		Red 7	91	-		Red 7	139	-
	Black 8	44	-		Black 8	92	-		Black 8	140	-
	Yellow 9	45	-		Yellow 9	93	-		Yellow 9	141	-
	Violet 10	46	-		Violet 10	94	-		Violet 10	142	-
	Rose 11	47	-		Rose 11	95	-		Rose 11	143	-
	Aqua 12	48	-		Aqua 12	96	-		Aqua 12	144	-

MODEL: 2D SHEET H
FILE NAME: C:\TRANSYSTEMS\PW_LOCAL\TRANSYSTEMS-PW-01\DMS32656\62R19-SHT-ITS-FIBER-21.DGN

ATLAS TECHNICAL CONSULTANTS, LLC
100 S. WACKER DRIVE, SUITE 400
CHICAGO, IL 60606

USER NAME = SALASL	DESIGNED - JAM	REVISED -	
	DRAWN - JAM	REVISED -	
PLOT SCALE = 0.16666667 ' / IN.	CHECKED - DJM	REVISED -	
PLOT DATE = 11/12/2025	DATE - 11/12/2025	REVISED -	

STATE OF ILLINOIS
DEPARTMENT OF TRANSPORTATION

I-80
DISTRIBUTION FIBER ASSIGNMENTS

SCALE: NONE | SHEET OF SHEETS | STA. TO STA.

F.A.I. RTE.	SECTION	COUNTY	TOTAL SHEETS	SHEET NO.
80	FAI 80 21 VLS	VARIOUS	467	428
		CONTRACT NO. 62R19		
	ILLINOIS	FED. AID PROJECT		

DISTRIBUTION CABLE FIBER ASSIGNMENTS		ORIGINATION	PROPOSED I-80 COMMUNICATIONS HUT
DISTRIBUTION CABLE DESIGNATION	DCF-IE-EB-011	DESTINATION	I-55 - EXISTING FIBER INTERCONNECT CABINET

BUFFER TUBE	FIBER	FIBER NO	ASSIGNMENT	BUFFER TUBE	FIBER NO	FIBER NO	ASSIGNMENT	BUFFER TUBE	FIBER	FIBER NO	ASSIGNMENT
BLUE	Blue 1	1	-	SLATE	Blue 1	49	-	YELLOW	Blue 1	97	-
	Orange 2	2	-		Orange 2	50	-		Orange 2	98	-
	Green 3	3	-		Green 3	51	-		Green 3	99	-
	Brown 4	4	-		Brown 4	52	-		Brown 4	100	-
	Slate 5	5	-		Slate 5	53	-		Slate 5	101	-
	White 6	6	-		White 6	54	-		White 6	102	-
	Red 7	7	-		Red 7	55	-		Red 7	103	-
	Black 8	8	-		Black 8	56	-		Black 8	104	-
	Yellow 9	9	-		Yellow 9	57	-		Yellow 9	105	-
	Violet 10	10	-		Violet 10	58	-		Violet 10	106	-
	Rose 11	11	-		Rose 11	59	-		Rose 11	107	-
	Aqua 12	12	-		Aqua 12	60	-		Aqua 12	108	-
ORANGE	Blue 1	13	-	WHITE	Blue 1	61	-	VIOLET	Blue 1	109	-
	Orange 2	14	-		Orange 2	62	-		Orange 2	110	-
	Green 3	15	-		Green 3	63	-		Green 3	111	-
	Brown 4	16	-		Brown 4	64	-		Brown 4	112	-
	Slate 5	17	-		Slate 5	65	-		Slate 5	113	-
	White 6	18	-		White 6	66	-		White 6	114	-
	Red 7	19	-		Red 7	67	-		Red 7	115	-
	Black 8	20	-		Black 8	68	-		Black 8	116	-
	Yellow 9	21	-		Yellow 9	69	-		Yellow 9	117	-
	Violet 10	22	-		Violet 10	70	-		Violet 10	118	-
	Rose 11	23	-		Rose 11	71	-		Rose 11	119	-
	Aqua 12	24	-		Aqua 12	72	-		Aqua 12	120	-
GREEN	Blue 1	25	-	RED	Blue 1	73	-	ROSE	Blue 1	121	-
	Orange 2	26	-		Orange 2	74	-		Orange 2	122	-
	Green 3	27	-		Green 3	75	-		Green 3	123	-
	Brown 4	28	-		Brown 4	76	-		Brown 4	124	-
	Slate 5	29	-		Slate 5	77	-		Slate 5	125	-
	White 6	30	-		White 6	78	-		White 6	126	-
	Red 7	31	-		Red 7	79	-		Red 7	127	-
	Black 8	32	-		Black 8	80	-		Black 8	128	-
	Yellow 9	33	-		Yellow 9	81	-		Yellow 9	129	-
	Violet 10	34	-		Violet 10	82	-		Violet 10	130	-
	Rose 11	35	-		Rose 11	83	-		Rose 11	131	-
	Aqua 12	36	-		Aqua 12	84	-		Aqua 12	132	-
BROWN	Blue 1	37	-	BLACK	Blue 1	85	-	AQUA	Blue 1	133	-
	Orange 2	38	-		Orange 2	86	-		Orange 2	134	-
	Green 3	39	-		Green 3	87	-		Green 3	135	-
	Brown 4	40	-		Brown 4	88	-		Brown 4	136	-
	Slate 5	41	-		Slate 5	89	-		Slate 5	137	-
	White 6	42	-		White 6	90	-		White 6	138	-
	Red 7	43	-		Red 7	91	-		Red 7	139	-
	Black 8	44	-		Black 8	92	-		Black 8	140	-
	Yellow 9	45	-		Yellow 9	93	-		Yellow 9	141	-
	Violet 10	46	-		Violet 10	94	-		Violet 10	142	-
	Rose 11	47	-		Rose 11	95	-		Rose 11	143	-
	Aqua 12	48	-		Aqua 12	96	-		Aqua 12	144	-

MODEL: 2D SHEET H
FILE NAME: C:\TRANSYSTEMS\PW_LOCAL\TRANSYSTEMS-PW-011\DMS32656\62R13-SHT-ITS-FIBER-22.DGN

ATLAS TECHNICAL CONSULTANTS, LLC
100 S. WACKER DRIVE, SUITE 400
CHICAGO, IL 60606

USER NAME = SALASL	DESIGNED - JAM	REVISED -	
	DRAWN - JAM	REVISED -	
PLOT SCALE = 0.16666667 ' / IN.	CHECKED - DJM	REVISED -	
PLOT DATE = 11/12/2025	DATE - 11/12/2025	REVISED -	

STATE OF ILLINOIS
DEPARTMENT OF TRANSPORTATION

I-80
DISTRIBUTION FIBER ASSIGNMENTS

SCALE: NONE | SHEET OF SHEETS | STA. TO STA.

F.A.I. RTE.	SECTION	COUNTY	TOTAL SHEETS	SHEET NO.
80	FAI 80 21 VLS	VARIOUS	467	429
		CONTRACT NO. 62R19		
	ILLINOIS	FED. AID PROJECT		

DISTRIBUTION CABLE FIBER ASSIGNMENTS								ORIGINATION	PROPOSED I-80 COMMUNICATIONS HUT			
DISTRIBUTION CABLE DESIGNATION		DCF-IE-WB-010						DESTINATION	CMV-IE-WB-34B			
BUFFER TUBE	FIBER	FIBER NO	ASSIGNMENT	BUFFER TUBE	FIBER NO	FIBER NO	ASSIGNMENT		BUFFER TUBE	FIBER	FIBER NO	ASSIGNMENT
BLUE	Blue 1	1	IE37*	SLATE	Blue 1	49	IE30B (FUTURE DEVICE BY OTHERS)		YELLOW	Blue 1	97	-
	Orange 2	2	IE37*		Orange 2	50	IE30B (FUTURE DEVICE BY OTHERS)			Orange 2	98	-
	Green 3	3	IE37*		Green 3	51	IE30B (FUTURE DEVICE BY OTHERS)			Green 3	99	-
	Brown 4	4	IE37*		Brown 4	52	IE30B (FUTURE DEVICE BY OTHERS)			Brown 4	100	-
	Slate 5	5	IE36B*		Slate 5	53	-			Slate 5	101	DMS47 (@ MIDLAND)
	White 6	6	IE36B*		White 6	54	-			White 6	102	DMS47 (@ MIDLAND)
	Red 7	7	IE36B*		Red 7	55	-			Red 7	103	DMS47 (@ MIDLAND)
	Black 8	8	IE36B*		Black 8	56	-			Black 8	104	DMS47 (@ MIDLAND)
	Yellow 9	9	IE36A*		Yellow 9	57	IE29B (FUTURE CONNECTION)			Yellow 9	105	DMS47 (@ CHERRY HILL) (FUTURE CONNECTION)
	Violet 10	10	IE36A*		Violet 10	58	IE29B (FUTURE CONNECTION)			Violet 10	106	DMS47 (@ CHERRY HILL) (FUTURE CONNECTION)
	Rose 11	11	IE36A*		Rose 11	59	IE29B (FUTURE CONNECTION)			Rose 11	107	DMS47 (@ CHERRY HILL) (FUTURE CONNECTION)
	Aqua 12	12	IE36A*		Aqua 12	60	IE29B (FUTURE CONNECTION)			Aqua 12	108	DMS47 (@ CHERRY HILL) (FUTURE CONNECTION)
ORANGE	Blue 1	13	IE35*	WHITE	Blue 1	61	IE29A (FUTURE CONNECTION)		VIOLET	Blue 1	109	TS 21280 (CHICAGO) (FUTURE TS BY OTHERS)
	Orange 2	14	IE35*		Orange 2	62	IE29A (FUTURE CONNECTION)			Orange 2	110	TS 21280 (CHICAGO) (FUTURE TS BY OTHERS)
	Green 3	15	IE35*		Green 3	63	IE29A (FUTURE CONNECTION)			Green 3	111	TS 21280 (CHICAGO) (FUTURE TS BY OTHERS)
	Brown 4	16	IE35*		Brown 4	64	IE29A (FUTURE CONNECTION)			Brown 4	112	TS 21280 (CHICAGO) (FUTURE TS BY OTHERS)
	Slate 5	17	IE34		Slate 5	65	IE28A (FUTURE CONNECTION)			Slate 5	113	TS 7393 (BRIGGS) (FUTURE CONNECTION)
	White 6	18	IE34		White 6	66	IE28A (FUTURE CONNECTION)			White 6	114	TS 7393 (BRIGGS) (FUTURE CONNECTION)
	Red 7	19	IE34		Red 7	67	IE28A (FUTURE CONNECTION)			Red 7	115	TS 7393 (BRIGGS) (FUTURE CONNECTION)
	Black 8	20	IE34		Black 8	68	IE28A (FUTURE CONNECTION)			Black 8	116	TS 7393 (BRIGGS) (FUTURE CONNECTION)
	Yellow 9	21	IE33		Yellow 9	69	IE28 (FUTURE CONNECTION)			Yellow 9	117	LC 'C' L0346 (I-55)*
	Violet 10	22	IE33		Violet 10	70	IE28 (FUTURE CONNECTION)			Violet 10	118	LC 'C' L0346 (I-55)*
	Rose 11	23	IE33		Rose 11	71	IE28 (FUTURE CONNECTION)			Rose 11	119	LC 'C' L0346 (I-55)*
	Aqua 12	24	IE33		Aqua 12	72	IE28 (FUTURE CONNECTION)			Aqua 12	120	LC 'C' L0346 (I-55)*
GREEN	Blue 1	25	IE32B	RED	Blue 1	73	IE27 (FUTURE CONNECTION)		ROSE	Blue 1	121	LC 'Z' L0775 (HOUBOLT)*
	Orange 2	26	IE32B		Orange 2	74	IE27 (FUTURE CONNECTION)			Orange 2	122	LC 'Z' L0775 (HOUBOLT)*
	Green 3	27	IE32B		Green 3	75	IE27 (FUTURE CONNECTION)			Green 3	123	LC 'Z' L0775 (HOUBOLT)*
	Brown 4	28	IE32B		Brown 4	76	IE27 (FUTURE CONNECTION)			Brown 4	124	LC 'Z' L0775 (HOUBOLT)*
	Slate 5	29	IE32A		Slate 5	77	CABINET 61 (FUTURE CONNECTION)			Slate 5	125	LC 'X' L0765 (CENTER) (FUTURE LC BY OTHERS)
	White 6	30	IE32A		White 6	78	CABINET 61 (FUTURE CONNECTION)			White 6	126	LC 'X' L0765 (CENTER) (FUTURE LC BY OTHERS)
	Red 7	31	IE32A		Red 7	79	CABINET 61 (FUTURE CONNECTION)			Red 7	127	LC 'X' L0765 (CENTER) (FUTURE LC BY OTHERS)
	Black 8	32	IE32A		Black 8	80	CABINET 61 (FUTURE CONNECTION)			Black 8	128	LC 'X' L0765 (CENTER) (FUTURE LC BY OTHERS)
	Yellow 9	33	IE32		Yellow 9	81	CABINET 59/IE25B (FUTURE CONNECTION)			Yellow 9	129	LC 'U' L0750 (CHICAGO) (FUTURE LC BY OTHERS)
	Violet 10	34	IE32		Violet 10	82	CABINET 59/IE25B (FUTURE CONNECTION)			Violet 10	130	LC 'U' L0750 (CHICAGO) (FUTURE LC BY OTHERS)
	Rose 11	35	IE32		Rose 11	83	CABINET 59/IE25B (FUTURE CONNECTION)			Rose 11	131	LC 'U' L0750 (CHICAGO) (FUTURE LC BY OTHERS)
	Aqua 12	36	IE32		Aqua 12	84	CABINET 59/IE25B (FUTURE CONNECTION)			Aqua 12	132	LC 'U' L0750 (CHICAGO) (FUTURE LC BY OTHERS)
BROWN	Blue 1	37	IE31A (FUTURE DEVICE BY OTHERS)	BLACK	Blue 1	85	-		AQUA	Blue 1	133	LC 'P' L0730 (BRIGGS) (FUTURE CONNECTION)
	Orange 2	38	IE31A (FUTURE DEVICE BY OTHERS)		Orange 2	86	-			Orange 2	134	LC 'P' L0730 (BRIGGS) (FUTURE CONNECTION)
	Green 3	39	IE31A (FUTURE DEVICE BY OTHERS)		Green 3	87	-			Green 3	135	LC 'P' L0730 (BRIGGS) (FUTURE CONNECTION)
	Brown 4	40	IE31A (FUTURE DEVICE BY OTHERS)		Brown 4	88	-			Brown 4	136	LC 'P' L0730 (BRIGGS) (FUTURE CONNECTION)
	Slate 5	41	IE31 (FUTURE DEVICE BY OTHERS)		Slate 5	89	IE25A (FUTURE CONNECTION)			Slate 5	137	LC 'O' L0729 (CHERRY HILL) (FUTURE CONNECTION)
	White 6	42	IE31 (FUTURE DEVICE BY OTHERS)		White 6	90	IE25A (FUTURE CONNECTION)			White 6	138	LC 'O' L0729 (CHERRY HILL) (FUTURE CONNECTION)
	Red 7	43	IE31 (FUTURE DEVICE BY OTHERS)		Red 7	91	IE25A (FUTURE CONNECTION)			Red 7	139	LC 'O' L0729 (CHERRY HILL) (FUTURE CONNECTION)
	Black 8	44	IE31 (FUTURE DEVICE BY OTHERS)		Black 8	92	IE25A (FUTURE CONNECTION)			Black 8	140	LC 'O' L0729 (CHERRY HILL) (FUTURE CONNECTION)
	Yellow 9	45	IE30D (FUTURE DEVICE BY OTHERS)		Yellow 9	93	IE25/CABINET 57 (FUTURE CONNECTION)			Yellow 9	141	US 6 MOVEABLE BRIDGES (FUTURE CONNECTION BY OTHERS)
	Violet 10	46	IE30D (FUTURE DEVICE BY OTHERS)		Violet 10	94	IE25/CABINET 57 (FUTURE CONNECTION)			Violet 10	142	US 6 MOVEABLE BRIDGES (FUTURE CONNECTION BY OTHERS)
	Rose 11	47	IE30D (FUTURE DEVICE BY OTHERS)		Rose 11	95	IE25/CABINET 57 (FUTURE CONNECTION)			Rose 11	143	US 6 MOVEABLE BRIDGES (FUTURE CONNECTION BY OTHERS)
	Aqua 12	48	IE30D (FUTURE DEVICE BY OTHERS)		Aqua 12	96	IE25/CABINET 57 (FUTURE CONNECTION)			Aqua 12	144	US 6 MOVEABLE BRIDGES (FUTURE CONNECTION BY OTHERS)

*INDICATES LOCATION IS SPLICED WITHIN DCF-IE-WB-010 SEGMENT.

MODEL: 2D SHEET H
FILE NAME: C:\TRANSYSTEMS\PW_LOCAL\TRANSYSTEMS-PW-01\DMS32656\62R19-SHT-ITS-FIBER-23.DGN

ATLAS TECHNICAL CONSULTANTS, LLC
100 S. WACKER DRIVE, SUITE 400
CHICAGO, IL 60606

USER NAME = SALASL	DESIGNED - JAM	REVISED -	
	DRAWN - JAM	REVISED -	
PLOT SCALE = 0.16666667 ' / IN.	CHECKED - DJM	REVISED -	
PLOT DATE = 11/12/2025	DATE - 11/12/2025	REVISED -	

STATE OF ILLINOIS
DEPARTMENT OF TRANSPORTATION

I-80
DISTRIBUTION FIBER ASSIGNMENTS

SCALE: NONE | SHEET OF SHEETS | STA. TO STA.

F.A.I. RTE.	SECTION	COUNTY	TOTAL SHEETS	SHEET NO.
80	FAI 80 21 VLS	VARIOUS	467	430
		CONTRACT NO. 62R19		
	ILLINOIS	FED. AID PROJECT		

DISTRIBUTION CABLE FIBER ASSIGNMENTS								ORIGINATION	PROPOSED I-80 COMMUNICATIONS HUT			
DISTRIBUTION CABLE DESIGNATION			DCF-IE-EB-010					DESTINATION	CMV-IE-EB-34B			
BUFFER TUBE	FIBER	FIBER NO	ASSIGNMENT	BUFFER TUBE	FIBER NO	FIBER NO	ASSIGNMENT		BUFFER TUBE	FIBER	FIBER NO	ASSIGNMENT
BLUE	Blue 1	1	IE36*	SLATE	Blue 1	49	IE29 (FUTURE CONNECTION)		YELLOW	Blue 1	97	CABINET 47 (FUTURE CONNECTION)
	Orange 2	2	IE36*		Orange 2	50	IE29 (FUTURE CONNECTION)			Orange 2	98	CABINET 47 (FUTURE CONNECTION)
	Green 3	3	IE36*		Green 3	51	IE29 (FUTURE CONNECTION)			Green 3	99	CABINET 47 (FUTURE CONNECTION)
	Brown 4	4	IE36*		Brown 4	52	IE29 (FUTURE CONNECTION)			Brown 4	100	CABINET 47 (FUTURE CONNECTION)
	Slate 5	5	IE35A*		Slate 5	53	IE28B (FUTURE CONNECTION)			Slate 5	101	IE23 (FUTURE CONNECTION)
	White 6	6	IE35A*		White 6	54	IE28B (FUTURE CONNECTION)			White 6	102	IE23 (FUTURE CONNECTION)
	Red 7	7	IE35A*		Red 7	55	IE28B (FUTURE CONNECTION)			Red 7	103	IE23 (FUTURE CONNECTION)
	Black 8	8	IE35A*		Black 8	56	IE28B (FUTURE CONNECTION)			Black 8	104	IE23 (FUTURE CONNECTION)
	Yellow 9	9	IE34B*		Yellow 9	57	IE27A (FUTURE CONNECTION)			Yellow 9	105	-
	Violet 10	10	IE34B*		Violet 10	58	IE27A (FUTURE CONNECTION)			Violet 10	106	-
	Rose 11	11	IE34B*		Rose 11	59	IE27A (FUTURE CONNECTION)			Rose 11	107	-
	Aqua 12	12	IE34B*		Aqua 12	60	IE27A (FUTURE CONNECTION)			Aqua 12	108	-
ORANGE	Blue 1	13	IE34A*	WHITE	Blue 1	61	IE26B (FUTURE CONNECTION)		VIOLET	Blue 1	109	DMS48*
	Orange 2	14	IE34A*		Orange 2	62	IE26B (FUTURE CONNECTION)			Orange 2	110	DMS48*
	Green 3	15	IE34A*		Green 3	63	IE26B (FUTURE CONNECTION)			Green 3	111	DMS48*
	Brown 4	16	IE34A*		Brown 4	64	IE26B (FUTURE CONNECTION)			Brown 4	112	DMS48*
	Slate 5	17	IE33A		Slate 5	65	IE26A (FUTURE CONNECTION)			Slate 5	113	DMS41 (FUTURE CONNECTION)
	White 6	18	IE33A		White 6	66	IE26A (FUTURE CONNECTION)			White 6	114	DMS41 (FUTURE CONNECTION)
	Red 7	19	IE33A		Red 7	67	IE26A (FUTURE CONNECTION)			Red 7	115	DMS41 (FUTURE CONNECTION)
	Black 8	20	IE33A		Black 8	68	IE26A (FUTURE CONNECTION)			Black 8	116	DMS41 (FUTURE CONNECTION)
	Yellow 9	21	IE32D		Yellow 9	69	CABINET 58 (FUTURE CONNECTION)			Yellow 9	117	TS 7536 (LARKIN)
	Violet 10	22	IE32D		Violet 10	70	CABINET 58 (FUTURE CONNECTION)			Violet 10	118	TS 7536 (LARKIN)
	Rose 11	23	IE32D		Rose 11	71	CABINET 58 (FUTURE CONNECTION)			Rose 11	119	TS 7536 (LARKIN)
	Aqua 12	24	IE32D		Aqua 12	72	CABINET 58 (FUTURE CONNECTION)			Aqua 12	120	TS 7536 (LARKIN)
GREEN	Blue 1	25	IE32C	RED	Blue 1	73	IE24 (FUTURE CONNECTION)		ROSE	Blue 1	121	TS 21835 (CENTER) (FUTURE TS BY OTHERS)
	Orange 2	26	IE32C		Orange 2	74	IE24 (FUTURE CONNECTION)			Orange 2	122	TS 21835 (CENTER) (FUTURE TS BY OTHERS)
	Green 3	27	IE32C		Green 3	75	IE24 (FUTURE CONNECTION)			Green 3	123	TS 21835 (CENTER) (FUTURE TS BY OTHERS)
	Brown 4	28	IE32C		Brown 4	76	IE24 (FUTURE CONNECTION)			Brown 4	124	TS 21835 (CENTER) (FUTURE TS BY OTHERS)
	Slate 5	29	IE31B (FUTURE DEVICE BY OTHERS)		Slate 5	77	CABINET 55 (FUTURE CONNECTION)			Slate 5	125	TS 7390 (RICHARDS) (FUTURE CONNECTION)
	White 6	30	IE31B (FUTURE DEVICE BY OTHERS)		White 6	78	CABINET 55 (FUTURE CONNECTION)			White 6	126	TS 7390 (RICHARDS) (FUTURE CONNECTION)
	Red 7	31	IE31B (FUTURE DEVICE BY OTHERS)		Red 7	79	CABINET 55 (FUTURE CONNECTION)			Red 7	127	TS 7390 (RICHARDS) (FUTURE CONNECTION)
	Black 8	32	IE31B (FUTURE DEVICE BY OTHERS)		Black 8	80	CABINET 55 (FUTURE CONNECTION)			Black 8	128	TS 7390 (RICHARDS) (FUTURE CONNECTION)
	Yellow 9	33	IE30C (FUTURE DEVICE BY OTHERS)		Yellow 9	81	CABINET 53 (FUTURE CONNECTION)			Yellow 9	129	LC 'Y' L0770 (LARKIN)
	Violet 10	34	IE30C (FUTURE DEVICE BY OTHERS)		Violet 10	82	CABINET 53 (FUTURE CONNECTION)			Violet 10	130	LC 'Y' L0770 (LARKIN)
	Rose 11	35	IE30C (FUTURE DEVICE BY OTHERS)		Rose 11	83	CABINET 53 (FUTURE CONNECTION)			Rose 11	131	LC 'Y' L0770 (LARKIN)
	Aqua 12	36	IE30C (FUTURE DEVICE BY OTHERS)		Aqua 12	84	CABINET 53 (FUTURE CONNECTION)			Aqua 12	132	LC 'Y' L0770 (LARKIN)
BROWN	Blue 1	37	-	BLACK	Blue 1	85	CABINET 51 (FUTURE CONNECTION)		AQUA	Blue 1	133	LC 'S' L0740 (RICHARDS) (FUTURE CONNECTION)
	Orange 2	38	-		Orange 2	86	CABINET 51 (FUTURE CONNECTION)			Orange 2	134	LC 'S' L0740 (RICHARDS) (FUTURE CONNECTION)
	Green 3	39	-		Green 3	87	CABINET 51 (FUTURE CONNECTION)			Green 3	135	LC 'S' L0740 (RICHARDS) (FUTURE CONNECTION)
	Brown 4	40	-		Brown 4	88	CABINET 51 (FUTURE CONNECTION)			Brown 4	136	LC 'S' L0740 (RICHARDS) (FUTURE CONNECTION)
	Slate 5	41	IE30A (FUTURE CONNECTION)		Slate 5	89	IE23A (FUTURE CONNECTION)			Slate 5	137	-
	White 6	42	IE30A (FUTURE CONNECTION)		White 6	90	IE23A (FUTURE CONNECTION)			White 6	138	-
	Red 7	43	IE30A (FUTURE CONNECTION)		Red 7	91	IE23A (FUTURE CONNECTION)			Red 7	139	-
	Black 8	44	IE30A (FUTURE CONNECTION)		Black 8	92	IE23A (FUTURE CONNECTION)			Black 8	140	-
	Yellow 9	45	IE30 (FUTURE CONNECTION)		Yellow 9	93	CABINET 49 (FUTURE CONNECTION)			Yellow 9	141	WILL CO (FUTURE CONNECTION BY OTHERS)
	Violet 10	46	IE30 (FUTURE CONNECTION)		Violet 10	94	CABINET 49 (FUTURE CONNECTION)			Violet 10	142	WILL CO (FUTURE CONNECTION BY OTHERS)
	Rose 11	47	IE30 (FUTURE CONNECTION)		Rose 11	95	CABINET 49 (FUTURE CONNECTION)			Rose 11	143	WILL CO (FUTURE CONNECTION BY OTHERS)
	Aqua 12	48	IE30 (FUTURE CONNECTION)		Aqua 12	96	CABINET 49 (FUTURE CONNECTION)			Aqua 12	144	WILL CO (FUTURE CONNECTION BY OTHERS)

*INDICATES LOCATION IS SPLICED WITHIN DCF-IE-EB-010 SEGMENT.

MODEL: 2D SHEET H
FILE NAME: C:\TRANSYSTEMS\PW_LOCAL\TRANSYSTEMS-PW-01\DMS32656\62R19-SHT-ITS-FIBER-24.DGN

ATLAS TECHNICAL CONSULTANTS, LLC
100 S. WACKER DRIVE, SUITE 400
CHICAGO, IL 60606

USER NAME = SALASL	DESIGNED - JAM	REVISED -	
	DRAWN - JAM	REVISED -	
PLOT SCALE = 0.16666667 ' / IN.	CHECKED - DJM	REVISED -	
PLOT DATE = 11/12/2025	DATE - 11/12/2025	REVISED -	

STATE OF ILLINOIS
DEPARTMENT OF TRANSPORTATION

I-80
DISTRIBUTION FIBER ASSIGNMENTS

SCALE: NONE | SHEET OF SHEETS | STA. TO STA.

F.A.I. RTE.	SECTION	COUNTY	TOTAL SHEETS	SHEET NO.
80	FAI 80 21 VLS	VARIOUS	467	431
		CONTRACT NO. 62R19		
	ILLINOIS	FED. AID PROJECT		

DISTRIBUTION CABLE FIBER ASSIGNMENTS		ORIGINATION	CMV-IE-WB-34B
DISTRIBUTION CABLE DESIGNATION	DCF-IE-WB-009	DESTINATION	CMV-IE-WB-31A

BUFFER TUBE	FIBER	FIBER NO	ASSIGNMENT	BUFFER TUBE	FIBER NO	FIBER NO	ASSIGNMENT	BUFFER TUBE	FIBER	FIBER NO	ASSIGNMENT
BLUE	Blue 1	1	IE37	SLATE	Blue 1	49	IE30B (FUTURE DEVICE BY OTHERS)	YELLOW	Blue 1	97	-
	Orange 2	2	IE37		Orange 2	50	IE30B (FUTURE DEVICE BY OTHERS)		Orange 2	98	-
	Green 3	3	IE37		Green 3	51	IE30B (FUTURE DEVICE BY OTHERS)		Green 3	99	-
	Brown 4	4	IE37		Brown 4	52	IE30B (FUTURE DEVICE BY OTHERS)		Brown 4	100	-
	Slate 5	5	IE36B		Slate 5	53	-		Slate 5	101	DMS47 (@ MIDLAND)*
	White 6	6	IE36B		White 6	54	-		White 6	102	DMS47 (@ MIDLAND)*
	Red 7	7	IE36B		Red 7	55	-		Red 7	103	DMS47 (@ MIDLAND)*
	Black 8	8	IE36B		Black 8	56	-		Black 8	104	DMS47 (@ MIDLAND)*
	Yellow 9	9	IE36A		Yellow 9	57	IE29B (FUTURE CONNECTION)		Yellow 9	105	DMS47 (@ CHERRY HILL) (FUTURE CONNECTION)
	Violet 10	10	IE36A		Violet 10	58	IE29B (FUTURE CONNECTION)		Violet 10	106	DMS47 (@ CHERRY HILL) (FUTURE CONNECTION)
	Rose 11	11	IE36A		Rose 11	59	IE29B (FUTURE CONNECTION)		Rose 11	107	DMS47 (@ CHERRY HILL) (FUTURE CONNECTION)
	Aqua 12	12	IE36A		Aqua 12	60	IE29B (FUTURE CONNECTION)		Aqua 12	108	DMS47 (@ CHERRY HILL) (FUTURE CONNECTION)
ORANGE	Blue 1	13	IE35	WHITE	Blue 1	61	IE29A (FUTURE CONNECTION)	VIOLET	Blue 1	109	TS 21280 (CHICAGO) (FUTURE TS BY OTHERS)
	Orange 2	14	IE35		Orange 2	62	IE29A (FUTURE CONNECTION)		Orange 2	110	TS 21280 (CHICAGO) (FUTURE TS BY OTHERS)
	Green 3	15	IE35		Green 3	63	IE29A (FUTURE CONNECTION)		Green 3	111	TS 21280 (CHICAGO) (FUTURE TS BY OTHERS)
	Brown 4	16	IE35		Brown 4	64	IE29A (FUTURE CONNECTION)		Brown 4	112	TS 21280 (CHICAGO) (FUTURE TS BY OTHERS)
	Slate 5	17	IE34*		Slate 5	65	IE28A (FUTURE CONNECTION)		Slate 5	113	TS 7393 (BRIGGS) (FUTURE CONNECTION)
	White 6	18	IE34*		White 6	66	IE28A (FUTURE CONNECTION)		White 6	114	TS 7393 (BRIGGS) (FUTURE CONNECTION)
	Red 7	19	IE34*		Red 7	67	IE28A (FUTURE CONNECTION)		Red 7	115	TS 7393 (BRIGGS) (FUTURE CONNECTION)
	Black 8	20	IE34*		Black 8	68	IE28A (FUTURE CONNECTION)		Black 8	116	TS 7393 (BRIGGS) (FUTURE CONNECTION)
	Yellow 9	21	IE33*		Yellow 9	69	IE28 (FUTURE CONNECTION)		Yellow 9	117	LC 'C' L0346 (I-55)
	Violet 10	22	IE33*		Violet 10	70	IE28 (FUTURE CONNECTION)		Violet 10	118	LC 'C' L0346 (I-55)
	Rose 11	23	IE33*		Rose 11	71	IE28 (FUTURE CONNECTION)		Rose 11	119	LC 'C' L0346 (I-55)
	Aqua 12	24	IE33*		Aqua 12	72	IE28 (FUTURE CONNECTION)		Aqua 12	120	LC 'C' L0346 (I-55)
GREEN	Blue 1	25	IE32B*	RED	Blue 1	73	IE27 (FUTURE CONNECTION)	ROSE	Blue 1	121	LC 'Z' L0775 (HOUBOLT)
	Orange 2	26	IE32B*		Orange 2	74	IE27 (FUTURE CONNECTION)		Orange 2	122	LC 'Z' L0775 (HOUBOLT)
	Green 3	27	IE32B*		Green 3	75	IE27 (FUTURE CONNECTION)		Green 3	123	LC 'Z' L0775 (HOUBOLT)
	Brown 4	28	IE32B*		Brown 4	76	IE27 (FUTURE CONNECTION)		Brown 4	124	LC 'Z' L0775 (HOUBOLT)
	Slate 5	29	IE32A*		Slate 5	77	CABINET 61 (FUTURE CONNECTION)		Slate 5	125	LC 'X' L0765 (CENTER) (FUTURE LC BY OTHERS)
	White 6	30	IE32A*		White 6	78	CABINET 61 (FUTURE CONNECTION)		White 6	126	LC 'X' L0765 (CENTER) (FUTURE LC BY OTHERS)
	Red 7	31	IE32A*		Red 7	79	CABINET 61 (FUTURE CONNECTION)		Red 7	127	LC 'X' L0765 (CENTER) (FUTURE LC BY OTHERS)
	Black 8	32	IE32A*		Black 8	80	CABINET 61 (FUTURE CONNECTION)		Black 8	128	LC 'X' L0765 (CENTER) (FUTURE LC BY OTHERS)
	Yellow 9	33	IE32*		Yellow 9	81	CABINET 59/IE25B (FUTURE CONNECTION)		Yellow 9	129	LC 'U' L0750 (CHICAGO) (FUTURE LC BY OTHERS)
	Violet 10	34	IE32*		Violet 10	82	CABINET 59/IE25B (FUTURE CONNECTION)		Violet 10	130	LC 'U' L0750 (CHICAGO) (FUTURE LC BY OTHERS)
	Rose 11	35	IE32*		Rose 11	83	CABINET 59/IE25B (FUTURE CONNECTION)		Rose 11	131	LC 'U' L0750 (CHICAGO) (FUTURE LC BY OTHERS)
	Aqua 12	36	IE32*		Aqua 12	84	CABINET 59/IE25B (FUTURE CONNECTION)		Aqua 12	132	LC 'U' L0750 (CHICAGO) (FUTURE LC BY OTHERS)
BROWN	Blue 1	37	IE31A (FUTURE DEVICE BY OTHERS)	BLACK	Blue 1	85	-	AQUA	Blue 1	133	LC 'P' L0730 (BRIGGS) (FUTURE CONNECTION)
	Orange 2	38	IE31A (FUTURE DEVICE BY OTHERS)		Orange 2	86	-		Orange 2	134	LC 'P' L0730 (BRIGGS) (FUTURE CONNECTION)
	Green 3	39	IE31A (FUTURE DEVICE BY OTHERS)		Green 3	87	-		Green 3	135	LC 'P' L0730 (BRIGGS) (FUTURE CONNECTION)
	Brown 4	40	IE31A (FUTURE DEVICE BY OTHERS)		Brown 4	88	-		Brown 4	136	LC 'P' L0730 (BRIGGS) (FUTURE CONNECTION)
	Slate 5	41	IE31 (FUTURE DEVICE BY OTHERS)		Slate 5	89	IE25A (FUTURE CONNECTION)		Slate 5	137	LC 'O' L0729 (CHERRY HILL) (FUTURE CONNECTION)
	White 6	42	IE31 (FUTURE DEVICE BY OTHERS)		White 6	90	IE25A (FUTURE CONNECTION)		White 6	138	LC 'O' L0729 (CHERRY HILL) (FUTURE CONNECTION)
	Red 7	43	IE31 (FUTURE DEVICE BY OTHERS)		Red 7	91	IE25A (FUTURE CONNECTION)		Red 7	139	LC 'O' L0729 (CHERRY HILL) (FUTURE CONNECTION)
	Black 8	44	IE31 (FUTURE DEVICE BY OTHERS)		Black 8	92	IE25A (FUTURE CONNECTION)		Black 8	140	LC 'O' L0729 (CHERRY HILL) (FUTURE CONNECTION)
	Yellow 9	45	IE30D (FUTURE DEVICE BY OTHERS)		Yellow 9	93	IE25/CABINET 57 (FUTURE CONNECTION)		Yellow 9	141	US 6 MOVEABLE BRIDGES (FUTURE CONNECTION BY OTHERS)
	Violet 10	46	IE30D (FUTURE DEVICE BY OTHERS)		Violet 10	94	IE25/CABINET 57 (FUTURE CONNECTION)		Violet 10	142	US 6 MOVEABLE BRIDGES (FUTURE CONNECTION BY OTHERS)
	Rose 11	47	IE30D (FUTURE DEVICE BY OTHERS)		Rose 11	95	IE25/CABINET 57 (FUTURE CONNECTION)		Rose 11	143	US 6 MOVEABLE BRIDGES (FUTURE CONNECTION BY OTHERS)
	Aqua 12	48	IE30D (FUTURE DEVICE BY OTHERS)		Aqua 12	96	IE25/CABINET 57 (FUTURE CONNECTION)		Aqua 12	144	US 6 MOVEABLE BRIDGES (FUTURE CONNECTION BY OTHERS)

*INDICATES LOCATION IS SPLICED WITHIN DCF-IE-WB-009 SEGMENT.

MODEL: 2D SHEET H
FILE NAME: C:\TRANSYSTEMS\PW_LOCAL\TRANSYSTEMS-PW-01\DMS32656\62R19-SHT-ITS-FIBER-25.DGN

ATLAS TECHNICAL CONSULTANTS, LLC
100 S. WACKER DRIVE, SUITE 400
CHICAGO, IL 60606

USER NAME = SALASL	DESIGNED - JAM	REVISED -	
	DRAWN - JAM	REVISED -	
PLOT SCALE = 0.16666667 ' / IN.	CHECKED - DJM	REVISED -	
PLOT DATE = 11/12/2025	DATE - 11/12/2025	REVISED -	

STATE OF ILLINOIS
DEPARTMENT OF TRANSPORTATION

I-80
DISTRIBUTION FIBER ASSIGNMENTS

SCALE: NONE | SHEET OF SHEETS | STA. TO STA.

F.A.I. RTE.	SECTION	COUNTY	TOTAL SHEETS	SHEET NO.
80	FAI 80 21 VLS	VARIOUS	467	432

CONTRACT NO. 62R19

ILLINOIS | FED. AID PROJECT

DISTRIBUTION CABLE FIBER ASSIGNMENTS		ORIGINATION	CMV-IE-EB-34B
DISTRIBUTION CABLE DESIGNATION	DCF-IE-EB-009	DESTINATION	CMV-IE-EB-31A

BUFFER TUBE	FIBER	FIBER NO	ASSIGNMENT	BUFFER TUBE	FIBER NO	FIBER NO	ASSIGNMENT	BUFFER TUBE	FIBER	FIBER NO	ASSIGNMENT
BLUE	Blue 1	1	IE36	SLATE	Blue 1	49	IE29 (FUTURE CONNECTION)	YELLOW	Blue 1	97	CABINET 47 (FUTURE CONNECTION)
	Orange 2	2	IE36		Orange 2	50	IE29 (FUTURE CONNECTION)		Orange 2	98	CABINET 47 (FUTURE CONNECTION)
	Green 3	3	IE36		Green 3	51	IE29 (FUTURE CONNECTION)		Green 3	99	CABINET 47 (FUTURE CONNECTION)
	Brown 4	4	IE36		Brown 4	52	IE29 (FUTURE CONNECTION)		Brown 4	100	CABINET 47 (FUTURE CONNECTION)
	Slate 5	5	IE35A		Slate 5	53	IE28B (FUTURE CONNECTION)		Slate 5	101	IE23 (FUTURE CONNECTION)
	White 6	6	IE35A		White 6	54	IE28B (FUTURE CONNECTION)		White 6	102	IE23 (FUTURE CONNECTION)
	Red 7	7	IE35A		Red 7	55	IE28B (FUTURE CONNECTION)		Red 7	103	IE23 (FUTURE CONNECTION)
	Black 8	8	IE35A		Black 8	56	IE28B (FUTURE CONNECTION)		Black 8	104	IE23 (FUTURE CONNECTION)
	Yellow 9	9	IE34B		Yellow 9	57	IE27A (FUTURE CONNECTION)		Yellow 9	105	-
	Violet 10	10	IE34B		Violet 10	58	IE27A (FUTURE CONNECTION)		Violet 10	106	-
	Rose 11	11	IE34B		Rose 11	59	IE27A (FUTURE CONNECTION)		Rose 11	107	-
	Aqua 12	12	IE34B		Aqua 12	60	IE27A (FUTURE CONNECTION)		Aqua 12	108	-
ORANGE	Blue 1	13	IE34A	WHITE	Blue 1	61	IE26B (FUTURE CONNECTION)	VIOLET	Blue 1	109	DMS48
	Orange 2	14	IE34A		Orange 2	62	IE26B (FUTURE CONNECTION)		Orange 2	110	DMS48
	Green 3	15	IE34A		Green 3	63	IE26B (FUTURE CONNECTION)		Green 3	111	DMS48
	Brown 4	16	IE34A		Brown 4	64	IE26B (FUTURE CONNECTION)		Brown 4	112	DMS48
	Slate 5	17	IE33A*		Slate 5	65	IE26A (FUTURE CONNECTION)		Slate 5	113	DMS41 (FUTURE CONNECTION)
	White 6	18	IE33A*		White 6	66	IE26A (FUTURE CONNECTION)		White 6	114	DMS41 (FUTURE CONNECTION)
	Red 7	19	IE33A*		Red 7	67	IE26A (FUTURE CONNECTION)		Red 7	115	DMS41 (FUTURE CONNECTION)
	Black 8	20	IE33A*		Black 8	68	IE26A (FUTURE CONNECTION)		Black 8	116	DMS41 (FUTURE CONNECTION)
	Yellow 9	21	IE32D*		Yellow 9	69	CABINET 58 (FUTURE CONNECTION)		Yellow 9	117	TS 7536 (LARKIN)*
	Violet 10	22	IE32D*		Violet 10	70	CABINET 58 (FUTURE CONNECTION)		Violet 10	118	TS 7536 (LARKIN)*
	Rose 11	23	IE32D*		Rose 11	71	CABINET 58 (FUTURE CONNECTION)		Rose 11	119	TS 7536 (LARKIN)*
	Aqua 12	24	IE32D*		Aqua 12	72	CABINET 58 (FUTURE CONNECTION)		Aqua 12	120	TS 7536 (LARKIN)*
GREEN	Blue 1	25	IE32C*	RED	Blue 1	73	IE24 (FUTURE CONNECTION)	ROSE	Blue 1	121	TS 21835 (CENTER) (FUTURE TS BY OTHERS)
	Orange 2	26	IE32C*		Orange 2	74	IE24 (FUTURE CONNECTION)		Orange 2	122	TS 21835 (CENTER) (FUTURE TS BY OTHERS)
	Green 3	27	IE32C*		Green 3	75	IE24 (FUTURE CONNECTION)		Green 3	123	TS 21835 (CENTER) (FUTURE TS BY OTHERS)
	Brown 4	28	IE32C*		Brown 4	76	IE24 (FUTURE CONNECTION)		Brown 4	124	TS 21835 (CENTER) (FUTURE TS BY OTHERS)
	Slate 5	29	IE31B (FUTURE DEVICE BY OTHERS)		Slate 5	77	CABINET 55 (FUTURE CONNECTION)		Slate 5	125	TS 7390 (RICHARDS) (FUTURE CONNECTION)
	White 6	30	IE31B (FUTURE DEVICE BY OTHERS)		White 6	78	CABINET 55 (FUTURE CONNECTION)		White 6	126	TS 7390 (RICHARDS) (FUTURE CONNECTION)
	Red 7	31	IE31B (FUTURE DEVICE BY OTHERS)		Red 7	79	CABINET 55 (FUTURE CONNECTION)		Red 7	127	TS 7390 (RICHARDS) (FUTURE CONNECTION)
	Black 8	32	IE31B (FUTURE DEVICE BY OTHERS)		Black 8	80	CABINET 55 (FUTURE CONNECTION)		Black 8	128	TS 7390 (RICHARDS) (FUTURE CONNECTION)
	Yellow 9	33	IE30C (FUTURE DEVICE BY OTHERS)		Yellow 9	81	CABINET 53 (FUTURE CONNECTION)		Yellow 9	129	LC 'Y' L0770 (LARKIN)*
	Violet 10	34	IE30C (FUTURE DEVICE BY OTHERS)		Violet 10	82	CABINET 53 (FUTURE CONNECTION)		Violet 10	130	LC 'Y' L0770 (LARKIN)*
	Rose 11	35	IE30C (FUTURE DEVICE BY OTHERS)		Rose 11	83	CABINET 53 (FUTURE CONNECTION)		Rose 11	131	LC 'Y' L0770 (LARKIN)*
	Aqua 12	36	IE30C (FUTURE DEVICE BY OTHERS)		Aqua 12	84	CABINET 53 (FUTURE CONNECTION)		Aqua 12	132	LC 'Y' L0770 (LARKIN)*
BROWN	Blue 1	37	-	BLACK	Blue 1	85	CABINET 51 (FUTURE CONNECTION)	AQUA	Blue 1	133	LC 'S' L0740 (RICHARDS) (FUTURE CONNECTION)
	Orange 2	38	-		Orange 2	86	CABINET 51 (FUTURE CONNECTION)		Orange 2	134	LC 'S' L0740 (RICHARDS) (FUTURE CONNECTION)
	Green 3	39	-		Green 3	87	CABINET 51 (FUTURE CONNECTION)		Green 3	135	LC 'S' L0740 (RICHARDS) (FUTURE CONNECTION)
	Brown 4	40	-		Brown 4	88	CABINET 51 (FUTURE CONNECTION)		Brown 4	136	LC 'S' L0740 (RICHARDS) (FUTURE CONNECTION)
	Slate 5	41	IE30A (FUTURE CONNECTION)		Slate 5	89	IE23A (FUTURE CONNECTION)		Slate 5	137	-
	White 6	42	IE30A (FUTURE CONNECTION)		White 6	90	IE23A (FUTURE CONNECTION)		White 6	138	-
	Red 7	43	IE30A (FUTURE CONNECTION)		Red 7	91	IE23A (FUTURE CONNECTION)		Red 7	139	-
	Black 8	44	IE30A (FUTURE CONNECTION)		Black 8	92	IE23A (FUTURE CONNECTION)		Black 8	140	-
	Yellow 9	45	IE30 (FUTURE CONNECTION)		Yellow 9	93	CABINET 49 (FUTURE CONNECTION)		Yellow 9	141	WILL CO (FUTURE CONNECTION BY OTHERS)
	Violet 10	46	IE30 (FUTURE CONNECTION)		Violet 10	94	CABINET 49 (FUTURE CONNECTION)		Violet 10	142	WILL CO (FUTURE CONNECTION BY OTHERS)
	Rose 11	47	IE30 (FUTURE CONNECTION)		Rose 11	95	CABINET 49 (FUTURE CONNECTION)		Rose 11	143	WILL CO (FUTURE CONNECTION BY OTHERS)
	Aqua 12	48	IE30 (FUTURE CONNECTION)		Aqua 12	96	CABINET 49 (FUTURE CONNECTION)		Aqua 12	144	WILL CO (FUTURE CONNECTION BY OTHERS)

*INDICATES LOCATION IS SPLICED WITHIN DCF-IE-EB-009 SEGMENT.

MODEL: 2D SHEET H
FILE NAME: C:\TRANSYSTEMS\PW_LOCAL\TRANSYSTEMS-PW-01\DMS32656\62R19-SHT-ITS-FIBER-26.DGN

ATLAS TECHNICAL CONSULTANTS, LLC
100 S. WACKER DRIVE, SUITE 400
CHICAGO, IL 60606

USER NAME = SALASL	DESIGNED - JAM	REVISED -	
	DRAWN - JAM	REVISED -	
PLOT SCALE = 0.16666667 ' / IN.	CHECKED - DJM	REVISED -	
PLOT DATE = 11/12/2025	DATE - 11/12/2025	REVISED -	

STATE OF ILLINOIS
DEPARTMENT OF TRANSPORTATION

I-80
DISTRIBUTION FIBER ASSIGNMENTS

SCALE: NONE | SHEET OF SHEETS | STA. TO STA.

F.A.I. RTE.	SECTION	COUNTY	TOTAL SHEETS	SHEET NO.
80	FAI 80 21 VLS	VARIOUS	467	433
		CONTRACT NO. 62R19		
	ILLINOIS	FED. AID PROJECT		

DISTRIBUTION CABLE FIBER ASSIGNMENTS		ORIGINATION	CMV-IE-EB-30E
DISTRIBUTION CABLE DESIGNATION	DCF-IE-WB-007	DESTINATION	CMV-IE-WB-26D

BUFFER TUBE	FIBER	FIBER NO	ASSIGNMENT	BUFFER TUBE	FIBER NO	FIBER NO	ASSIGNMENT	BUFFER TUBE	FIBER	FIBER NO	ASSIGNMENT
BLUE	Blue 1	1	IE37 (FUTURE CONNECTION)	SLATE	Blue 1	49	IE30B (FUTURE DEVICE BY OTHERS)	YELLOW	Blue 1	97	-
	Orange 2	2	IE37 (FUTURE CONNECTION)		Orange 2	50	IE30B (FUTURE DEVICE BY OTHERS)		Orange 2	98	-
	Green 3	3	IE37 (FUTURE CONNECTION)		Green 3	51	IE30B (FUTURE DEVICE BY OTHERS)		Green 3	99	-
	Brown 4	4	IE37 (FUTURE CONNECTION)		Brown 4	52	IE30B (FUTURE DEVICE BY OTHERS)		Brown 4	100	-
	Slate 5	5	IE36B (FUTURE CONNECTION)		Slate 5	53	-		Slate 5	101	DMS47 (@ MIDLAND) (FUTURE CONNECTION)
	White 6	6	IE36B (FUTURE CONNECTION)		White 6	54	-		White 6	102	DMS47 (@ MIDLAND) (FUTURE CONNECTION)
	Red 7	7	IE36B (FUTURE CONNECTION)		Red 7	55	-		Red 7	103	DMS47 (@ MIDLAND) (FUTURE CONNECTION)
	Black 8	8	IE36B (FUTURE CONNECTION)		Black 8	56	-		Black 8	104	DMS47 (@ MIDLAND) (FUTURE CONNECTION)
	Yellow 9	9	IE36A (FUTURE CONNECTION)		Yellow 9	57	IE29B*		Yellow 9	105	DMS 47 (@ CHERRY HILL)*
	Violet 10	10	IE36A (FUTURE CONNECTION)		Violet 10	58	IE29B*		Violet 10	106	DMS 47 (@ CHERRY HILL)*
	Rose 11	11	IE36A (FUTURE CONNECTION)		Rose 11	59	IE29B*		Rose 11	107	DMS 47 (@ CHERRY HILL)*
	Aqua 12	12	IE36A (FUTURE CONNECTION)		Aqua 12	60	IE29B*		Aqua 12	108	DMS 47 (@ CHERRY HILL)*
ORANGE	Blue 1	13	IE35 (FUTURE CONNECTION)	WHITE	Blue 1	61	IE29A*	VIOLET	Blue 1	109	TS 21280 (CHICAGO) (FUTURE TS BY OTHERS)
	Orange 2	14	IE35 (FUTURE CONNECTION)		Orange 2	62	IE29A*		Orange 2	110	TS 21280 (CHICAGO) (FUTURE TS BY OTHERS)
	Green 3	15	IE35 (FUTURE CONNECTION)		Green 3	63	IE29A*		Green 3	111	TS 21280 (CHICAGO) (FUTURE TS BY OTHERS)
	Brown 4	16	IE35 (FUTURE CONNECTION)		Brown 4	64	IE29A*		Brown 4	112	TS 21280 (CHICAGO) (FUTURE TS BY OTHERS)
	Slate 5	17	IE34 (FUTURE CONNECTION)		Slate 5	65	IE28A*		Slate 5	113	TS 7393 (BRIGGS)*
	White 6	18	IE34 (FUTURE CONNECTION)		White 6	66	IE28A*		White 6	114	TS 7393 (BRIGGS)*
	Red 7	19	IE34 (FUTURE CONNECTION)		Red 7	67	IE28A*		Red 7	115	TS 7393 (BRIGGS)*
	Black 8	20	IE34 (FUTURE CONNECTION)		Black 8	68	IE28A*		Black 8	116	TS 7393 (BRIGGS)*
	Yellow 9	21	IE33 (FUTURE CONNECTION)		Yellow 9	69	IE28*		Yellow 9	117	LC 'C' L0346 (I-55) (FUTURE CONNECTION)
	Violet 10	22	IE33 (FUTURE CONNECTION)		Violet 10	70	IE28*		Violet 10	118	LC 'C' L0346 (I-55) (FUTURE CONNECTION)
	Rose 11	23	IE33 (FUTURE CONNECTION)		Rose 11	71	IE28*		Rose 11	119	LC 'C' L0346 (I-55) (FUTURE CONNECTION)
	Aqua 12	24	IE33 (FUTURE CONNECTION)		Aqua 12	72	IE28*		Aqua 12	120	LC 'C' L0346 (I-55) (FUTURE CONNECTION)
GREEN	Blue 1	25	IE32B (FUTURE CONNECTION)	RED	Blue 1	73	IE27*	ROSE	Blue 1	121	LC 'Z' L0775 (HOUBOLT) (FUTURE CONNECTION)
	Orange 2	26	IE32B (FUTURE CONNECTION)		Orange 2	74	IE27*		Orange 2	122	LC 'Z' L0775 (HOUBOLT) (FUTURE CONNECTION)
	Green 3	27	IE32B (FUTURE CONNECTION)		Green 3	75	IE27*		Green 3	123	LC 'Z' L0775 (HOUBOLT) (FUTURE CONNECTION)
	Brown 4	28	IE32B (FUTURE CONNECTION)		Brown 4	76	IE27*		Brown 4	124	LC 'Z' L0775 (HOUBOLT) (FUTURE CONNECTION)
	Slate 5	29	IE32A (FUTURE CONNECTION)		Slate 5	77	CABINET 61		Slate 5	125	LC 'X' L0765 (CENTER) (FUTURE LC BY OTHERS)
	White 6	30	IE32A (FUTURE CONNECTION)		White 6	78	CABINET 61		White 6	126	LC 'X' L0765 (CENTER) (FUTURE LC BY OTHERS)
	Red 7	31	IE32A (FUTURE CONNECTION)		Red 7	79	CABINET 61		Red 7	127	LC 'X' L0765 (CENTER) (FUTURE LC BY OTHERS)
	Black 8	32	IE32A (FUTURE CONNECTION)		Black 8	80	CABINET 61		Black 8	128	LC 'X' L0765 (CENTER) (FUTURE LC BY OTHERS)
	Yellow 9	33	IE32 (FUTURE CONNECTION)		Yellow 9	81	CABINET 59/IE25B		Yellow 9	129	LC 'U' L0750 (CHICAGO) (FUTURE LC BY OTHERS)
	Violet 10	34	IE32 (FUTURE CONNECTION)		Violet 10	82	CABINET 59/IE25B		Violet 10	130	LC 'U' L0750 (CHICAGO) (FUTURE LC BY OTHERS)
	Rose 11	35	IE32 (FUTURE CONNECTION)		Rose 11	83	CABINET 59/IE25B		Rose 11	131	LC 'U' L0750 (CHICAGO) (FUTURE LC BY OTHERS)
	Aqua 12	36	IE32 (FUTURE CONNECTION)		Aqua 12	84	CABINET 59/IE25B		Aqua 12	132	LC 'U' L0750 (CHICAGO) (FUTURE LC BY OTHERS)
BROWN	Blue 1	37	IE31A (FUTURE DEVICE BY OTHERS)	BLACK	Blue 1	85	-	AQUA	Blue 1	133	LC 'P' L0730 (BRIGGS)*
	Orange 2	38	IE31A (FUTURE DEVICE BY OTHERS)		Orange 2	86	-		Orange 2	134	LC 'P' L0730 (BRIGGS)*
	Green 3	39	IE31A (FUTURE DEVICE BY OTHERS)		Green 3	87	-		Green 3	135	LC 'P' L0730 (BRIGGS)*
	Brown 4	40	IE31A (FUTURE DEVICE BY OTHERS)		Brown 4	88	-		Brown 4	136	LC 'P' L0730 (BRIGGS)*
	Slate 5	41	IE31 (FUTURE DEVICE BY OTHERS)		Slate 5	89	IE25A		Slate 5	137	LC 'O' L0729 (CHERRY HILL)*
	White 6	42	IE31 (FUTURE DEVICE BY OTHERS)		White 6	90	IE25A		White 6	138	LC 'O' L0729 (CHERRY HILL)*
	Red 7	43	IE31 (FUTURE DEVICE BY OTHERS)		Red 7	91	IE25A		Red 7	139	LC 'O' L0729 (CHERRY HILL)*
	Black 8	44	IE31 (FUTURE DEVICE BY OTHERS)		Black 8	92	IE25A		Black 8	140	LC 'O' L0729 (CHERRY HILL)*
	Yellow 9	45	IE30D (FUTURE DEVICE BY OTHERS)		Yellow 9	93	IE25/CABINET 57		Yellow 9	141	US 6 MOVEABLE BRIDGES (FUTURE CONNECTION BY OTHERS)
	Violet 10	46	IE30D (FUTURE DEVICE BY OTHERS)		Violet 10	94	IE25/CABINET 57		Violet 10	142	US 6 MOVEABLE BRIDGES (FUTURE CONNECTION BY OTHERS)
	Rose 11	47	IE30D (FUTURE DEVICE BY OTHERS)		Rose 11	95	IE25/CABINET 57		Rose 11	143	US 6 MOVEABLE BRIDGES (FUTURE CONNECTION BY OTHERS)
	Aqua 12	48	IE30D (FUTURE DEVICE BY OTHERS)		Aqua 12	96	IE25/CABINET 57		Aqua 12	144	US 6 MOVEABLE BRIDGES (FUTURE CONNECTION BY OTHERS)

*INDICATES LOCATION IS SPLICED WITHIN DCF-IE-WB-007 SEGMENT.

MODEL: 2D SHEET H
FILE NAME: C:\TRANSYSTEMS\PW_LOCAL\TRANSYSTEMS-PW-01\DMS32656\62R19-SHT-ITS-FIBER-27.DGN

ATLAS TECHNICAL CONSULTANTS, LLC
100 S. WACKER DRIVE, SUITE 400
CHICAGO, IL 60606

USER NAME = SALASL	DESIGNED - JAM	REVISED -	
	DRAWN - JAM	REVISED -	
PLOT SCALE = 0.16666667 ' / IN.	CHECKED - DJM	REVISED -	
PLOT DATE = 11/12/2025	DATE - 11/12/2025	REVISED -	

STATE OF ILLINOIS
DEPARTMENT OF TRANSPORTATION

I-80
DISTRIBUTION FIBER ASSIGNMENTS

SCALE: NONE | SHEET OF SHEETS | STA. TO STA.

F.A.I. RTE.	SECTION	COUNTY	TOTAL SHEETS	SHEET NO.
80	FAI 80 21 VLS	VARIOUS	467	434
		CONTRACT NO. 62R19		
	ILLINOIS	FED. AID PROJECT		

DISTRIBUTION CABLE FIBER ASSIGNMENTS

DISTRIBUTION CABLE DESIGNATION: DCF-IE-EB-007

ORIGINATION: CMV-IE-EB-30E

DESTINATION: CMV-IE-WB-26A

BUFFER TUBE	FIBER	FIBER NO	ASSIGNMENT	BUFFER TUBE	FIBER NO	FIBER NO	ASSIGNMENT	BUFFER TUBE	FIBER	FIBER NO	ASSIGNMENT
BLUE	Blue 1	1	IE36 (FUTURE CONNECTION)	SLATE	Blue 1	49	IE29*	YELLOW	Blue 1	97	CABINET 47
	Orange 2	2	IE36 (FUTURE CONNECTION)		Orange 2	50	IE29*		Orange 2	98	CABINET 47
	Green 3	3	IE36 (FUTURE CONNECTION)		Green 3	51	IE29*		Green 3	99	CABINET 47
	Brown 4	4	IE36 (FUTURE CONNECTION)		Brown 4	52	IE29*		Brown 4	100	CABINET 47
	Slate 5	5	IE35A (FUTURE CONNECTION)		Slate 5	53	IE28B*		Slate 5	101	IE23
	White 6	6	IE35A (FUTURE CONNECTION)		White 6	54	IE28B*		White 6	102	IE23
	Red 7	7	IE35A (FUTURE CONNECTION)		Red 7	55	IE28B*		Red 7	103	IE23
	Black 8	8	IE35A (FUTURE CONNECTION)		Black 8	56	IE28B*		Black 8	104	IE23
	Yellow 9	9	IE34B (FUTURE CONNECTION)		Yellow 9	57	IE27A*		Yellow 9	105	-
	Violet 10	10	IE34B (FUTURE CONNECTION)		Violet 10	58	IE27A*		Violet 10	106	-
	Rose 11	11	IE34B (FUTURE CONNECTION)		Rose 11	59	IE27A*		Rose 11	107	-
	Aqua 12	12	IE34B (FUTURE CONNECTION)		Aqua 12	60	IE27A*		Aqua 12	108	-
ORANGE	Blue 1	13	IE34A (FUTURE CONNECTION)	WHITE	Blue 1	61	IE26B*	VIOLET	Blue 1	109	DMS48 (FUTURE CONNECTION)
	Orange 2	14	IE34A (FUTURE CONNECTION)		Orange 2	62	IE26B*		Orange 2	110	DMS48 (FUTURE CONNECTION)
	Green 3	15	IE34A (FUTURE CONNECTION)		Green 3	63	IE26B*		Green 3	111	DMS48 (FUTURE CONNECTION)
	Brown 4	16	IE34A (FUTURE CONNECTION)		Brown 4	64	IE26B*		Brown 4	112	DMS48 (FUTURE CONNECTION)
	Slate 5	17	IE33A (FUTURE CONNECTION)		Slate 5	65	IE26A*		Slate 5	113	DMS41*
	White 6	18	IE33A (FUTURE CONNECTION)		White 6	66	IE26A*		White 6	114	DMS41*
	Red 7	19	IE33A (FUTURE CONNECTION)		Red 7	67	IE26A*		Red 7	115	DMS41*
	Black 8	20	IE33A (FUTURE CONNECTION)		Black 8	68	IE26A*		Black 8	116	DMS41*
	Yellow 9	21	IE32D (FUTURE CONNECTION)		Yellow 9	69	CABINET 58*		Yellow 9	117	TS 7536 (LARKIN) (FUTURE CONNECTION)
	Violet 10	22	IE32D (FUTURE CONNECTION)		Violet 10	70	CABINET 58*		Violet 10	118	TS 7536 (LARKIN) (FUTURE CONNECTION)
	Rose 11	23	IE32D (FUTURE CONNECTION)		Rose 11	71	CABINET 58*		Rose 11	119	TS 7536 (LARKIN) (FUTURE CONNECTION)
	Aqua 12	24	IE32D (FUTURE CONNECTION)		Aqua 12	72	CABINET 58*		Aqua 12	120	TS 7536 (LARKIN) (FUTURE CONNECTION)
GREEN	Blue 1	25	IE32C (FUTURE CONNECTION)	RED	Blue 1	73	IE24	ROSE	Blue 1	121	TS 21835 (CENTER) (FUTURE TS BY OTHERS)
	Orange 2	26	IE32C (FUTURE CONNECTION)		Orange 2	74	IE24		Orange 2	122	TS 21835 (CENTER) (FUTURE TS BY OTHERS)
	Green 3	27	IE32C (FUTURE CONNECTION)		Green 3	75	IE24		Green 3	123	TS 21835 (CENTER) (FUTURE TS BY OTHERS)
	Brown 4	28	IE32C (FUTURE CONNECTION)		Brown 4	76	IE24		Brown 4	124	TS 21835 (CENTER) (FUTURE TS BY OTHERS)
	Slate 5	29	IE31B (FUTURE DEVICE BY OTHERS)		Slate 5	77	CABINET 55		Slate 5	125	TS 7390 (RICHARDS)*
	White 6	30	IE31B (FUTURE DEVICE BY OTHERS)		White 6	78	CABINET 55		White 6	126	TS 7390 (RICHARDS)*
	Red 7	31	IE31B (FUTURE DEVICE BY OTHERS)		Red 7	79	CABINET 55		Red 7	127	TS 7390 (RICHARDS)*
	Black 8	32	IE31B (FUTURE DEVICE BY OTHERS)		Black 8	80	CABINET 55		Black 8	128	TS 7390 (RICHARDS)*
	Yellow 9	33	IE30C (FUTURE DEVICE BY OTHERS)		Yellow 9	81	CABINET 53		Yellow 9	129	LC 'Y' L0770 (LARKIN) (FUTURE CONNECTION)
	Violet 10	34	IE30C (FUTURE DEVICE BY OTHERS)		Violet 10	82	CABINET 53		Violet 10	130	LC 'Y' L0770 (LARKIN) (FUTURE CONNECTION)
	Rose 11	35	IE30C (FUTURE DEVICE BY OTHERS)		Rose 11	83	CABINET 53		Rose 11	131	LC 'Y' L0770 (LARKIN) (FUTURE CONNECTION)
	Aqua 12	36	IE30C (FUTURE DEVICE BY OTHERS)		Aqua 12	84	CABINET 53		Aqua 12	132	LC 'Y' L0770 (LARKIN) (FUTURE CONNECTION)
BROWN	Blue 1	37	-	BLACK	Blue 1	85	CABINET 51	AQUA	Blue 1	133	LC 'S' L0740 (RICHARDS)
	Orange 2	38	-		Orange 2	86	CABINET 51		Orange 2	134	LC 'S' L0740 (RICHARDS)
	Green 3	39	-		Green 3	87	CABINET 51		Green 3	135	LC 'S' L0740 (RICHARDS)
	Brown 4	40	-		Brown 4	88	CABINET 51		Brown 4	136	LC 'S' L0740 (RICHARDS)
	Slate 5	41	IE30A*		Slate 5	89	IE23A		Slate 5	137	-
	White 6	42	IE30A*		White 6	90	IE23A		White 6	138	-
	Red 7	43	IE30A*		Red 7	91	IE23A		Red 7	139	-
	Black 8	44	IE30A*		Black 8	92	IE23A		Black 8	140	-
	Yellow 9	45	IE30*		Yellow 9	93	CABINET 49		Yellow 9	141	WILL CO (FUTURE CONNECTION BY OTHERS)
	Violet 10	46	IE30*		Violet 10	94	CABINET 49		Violet 10	142	WILL CO (FUTURE CONNECTION BY OTHERS)
	Rose 11	47	IE30*		Rose 11	95	CABINET 49		Rose 11	143	WILL CO (FUTURE CONNECTION BY OTHERS)
	Aqua 12	48	IE30*		Aqua 12	96	CABINET 49		Aqua 12	144	WILL CO (FUTURE CONNECTION BY OTHERS)

*INDICATES LOCATION IS SPLICED WITHIN DCF-IE-EB-007 SEGMENT.

MODEL: 2D SHEET H
FILE NAME: C:\TRANSYSTEMS\PW_LOCAL\TRANSYSTEMS-PW-01\DMS32656\62R19-SHT-ITS-FIBER-28.DGN

ATLAS TECHNICAL CONSULTANTS, LLC
100 S. WACKER DRIVE, SUITE 400
CHICAGO, IL 60606

USER NAME = SALASL	DESIGNED - JAM	REVISED -	
	DRAWN - JAM	REVISED -	
PLOT SCALE = 0.16666667 ' / IN.	CHECKED - DJM	REVISED -	
PLOT DATE = 11/12/2025	DATE - 11/12/2025	REVISED -	

STATE OF ILLINOIS
DEPARTMENT OF TRANSPORTATION

I-80
DISTRIBUTION FIBER ASSIGNMENTS

SCALE: NONE | SHEET OF SHEETS | STA. TO STA.

F.A.I. RTE.	SECTION	COUNTY	TOTAL SHEETS	SHEET NO.
80	FAI 80 21 VLS	VARIOUS	467	435

CONTRACT NO. 62R19

ILLINOIS | FED. AID PROJECT

DISTRIBUTION CABLE FIBER ASSIGNMENTS		ORIGINATION	CMV-IE-WB-26D
DISTRIBUTION CABLE DESIGNATION	DCF-IE-006 (FIBERS 1- 144)	DESTINATION	FIBER OPTIC INTERCONNECT CABINET EAST OF US 30

BUFFER TUBE	FIBER	FIBER NO	ASSIGNMENT	BUFFER TUBE	FIBER NO	FIBER NO	ASSIGNMENT	BUFFER TUBE	FIBER	FIBER NO	ASSIGNMENT
BLUE	Blue 1	1	IE37 (FUTURE CONNECTION)	SLATE	Blue 1	49	IE30B (FUTURE DEVICE BY OTHERS)	YELLOW	Blue 1	97	-
	Orange 2	2	IE37 (FUTURE CONNECTION)		Orange 2	50	IE30B (FUTURE DEVICE BY OTHERS)		Orange 2	98	-
	Green 3	3	IE37 (FUTURE CONNECTION)		Green 3	51	IE30B (FUTURE DEVICE BY OTHERS)		Green 3	99	-
	Brown 4	4	IE37 (FUTURE CONNECTION)		Brown 4	52	IE30B (FUTURE DEVICE BY OTHERS)		Brown 4	100	-
	Slate 5	5	IE36B (FUTURE CONNECTION)		Slate 5	53	-		Slate 5	101	DMS47 (@ MIDLAND) (FUTURE CONNECTION)
	White 6	6	IE36B (FUTURE CONNECTION)		White 6	54	-		White 6	102	DMS47 (@ MIDLAND) (FUTURE CONNECTION)
	Red 7	7	IE36B (FUTURE CONNECTION)		Red 7	55	-		Red 7	103	DMS47 (@ MIDLAND) (FUTURE CONNECTION)
	Black 8	8	IE36B (FUTURE CONNECTION)		Black 8	56	-		Black 8	104	DMS47 (@ MIDLAND) (FUTURE CONNECTION)
	Yellow 9	9	IE36A (FUTURE CONNECTION)		Yellow 9	57	IE29B		Yellow 9	105	DMS 47 (@ CHERRY HILL)
	Violet 10	10	IE36A (FUTURE CONNECTION)		Violet 10	58	IE29B		Violet 10	106	DMS 47 (@ CHERRY HILL)
	Rose 11	11	IE36A (FUTURE CONNECTION)		Rose 11	59	IE29B		Rose 11	107	DMS 47 (@ CHERRY HILL)
	Aqua 12	12	IE36A (FUTURE CONNECTION)		Aqua 12	60	IE29B		Aqua 12	108	DMS 47 (@ CHERRY HILL)
ORANGE	Blue 1	13	IE35 (FUTURE CONNECTION)	WHITE	Blue 1	61	IE29A	VIOLET	Blue 1	109	TS 21280 (CHICAGO) (FUTURE TS BY OTHERS)
	Orange 2	14	IE35 (FUTURE CONNECTION)		Orange 2	62	IE29A		Orange 2	110	TS 21280 (CHICAGO) (FUTURE TS BY OTHERS)
	Green 3	15	IE35 (FUTURE CONNECTION)		Green 3	63	IE29A		Green 3	111	TS 21280 (CHICAGO) (FUTURE TS BY OTHERS)
	Brown 4	16	IE35 (FUTURE CONNECTION)		Brown 4	64	IE29A		Brown 4	112	TS 21280 (CHICAGO) (FUTURE TS BY OTHERS)
	Slate 5	17	IE34 (FUTURE CONNECTION)		Slate 5	65	IE28A		Slate 5	113	TS 7393 (BRIGGS)
	White 6	18	IE34 (FUTURE CONNECTION)		White 6	66	IE28A		White 6	114	TS 7393 (BRIGGS)
	Red 7	19	IE34 (FUTURE CONNECTION)		Red 7	67	IE28A		Red 7	115	TS 7393 (BRIGGS)
	Black 8	20	IE34 (FUTURE CONNECTION)		Black 8	68	IE28A		Black 8	116	TS 7393 (BRIGGS)
	Yellow 9	21	IE33 (FUTURE CONNECTION)		Yellow 9	69	IE28		Yellow 9	117	LC 'C' L0346 (I-55) (FUTURE CONNECTION)
	Violet 10	22	IE33 (FUTURE CONNECTION)		Violet 10	70	IE28		Violet 10	118	LC 'C' L0346 (I-55) (FUTURE CONNECTION)
	Rose 11	23	IE33 (FUTURE CONNECTION)		Rose 11	71	IE28		Rose 11	119	LC 'C' L0346 (I-55) (FUTURE CONNECTION)
	Aqua 12	24	IE33 (FUTURE CONNECTION)		Aqua 12	72	IE28		Aqua 12	120	LC 'C' L0346 (I-55) (FUTURE CONNECTION)
GREEN	Blue 1	25	IE32B (FUTURE CONNECTION)	RED	Blue 1	73	IE27	ROSE	Blue 1	121	LC 'Z' L0775 (HOUBOLT) (FUTURE CONNECTION)
	Orange 2	26	IE32B (FUTURE CONNECTION)		Orange 2	74	IE27		Orange 2	122	LC 'Z' L0775 (HOUBOLT) (FUTURE CONNECTION)
	Green 3	27	IE32B (FUTURE CONNECTION)		Green 3	75	IE27		Green 3	123	LC 'Z' L0775 (HOUBOLT) (FUTURE CONNECTION)
	Brown 4	28	IE32B (FUTURE CONNECTION)		Brown 4	76	IE27		Brown 4	124	LC 'Z' L0775 (HOUBOLT) (FUTURE CONNECTION)
	Slate 5	29	IE32A (FUTURE CONNECTION)		Slate 5	77	CABINET 61*		Slate 5	125	LC 'X' L0765 (CENTER) (FUTURE LC BY OTHERS)
	White 6	30	IE32A (FUTURE CONNECTION)		White 6	78	CABINET 61*		White 6	126	LC 'X' L0765 (CENTER) (FUTURE LC BY OTHERS)
	Red 7	31	IE32A (FUTURE CONNECTION)		Red 7	79	CABINET 61*		Red 7	127	LC 'X' L0765 (CENTER) (FUTURE LC BY OTHERS)
	Black 8	32	IE32A (FUTURE CONNECTION)		Black 8	80	CABINET 61*		Black 8	128	LC 'X' L0765 (CENTER) (FUTURE LC BY OTHERS)
	Yellow 9	33	IE32 (FUTURE CONNECTION)		Yellow 9	81	CABINET 59/IE25B*		Yellow 9	129	LC 'U' L0750 (CHICAGO) (FUTURE LC BY OTHERS)
	Violet 10	34	IE32 (FUTURE CONNECTION)		Violet 10	82	CABINET 59/IE25B*		Violet 10	130	LC 'U' L0750 (CHICAGO) (FUTURE LC BY OTHERS)
	Rose 11	35	IE32 (FUTURE CONNECTION)		Rose 11	83	CABINET 59/IE25B*		Rose 11	131	LC 'U' L0750 (CHICAGO) (FUTURE LC BY OTHERS)
	Aqua 12	36	IE32 (FUTURE CONNECTION)		Aqua 12	84	CABINET 59/IE25B*		Aqua 12	132	LC 'U' L0750 (CHICAGO) (FUTURE LC BY OTHERS)
BROWN	Blue 1	37	IE31A (FUTURE DEVICE BY OTHERS)	BLACK	Blue 1	85	-	AQUA	Blue 1	133	LC 'P' L0730 (BRIGGS)
	Orange 2	38	IE31A (FUTURE DEVICE BY OTHERS)		Orange 2	86	-		Orange 2	134	LC 'P' L0730 (BRIGGS)
	Green 3	39	IE31A (FUTURE DEVICE BY OTHERS)		Green 3	87	-		Green 3	135	LC 'P' L0730 (BRIGGS)
	Brown 4	40	IE31A (FUTURE DEVICE BY OTHERS)		Brown 4	88	-		Brown 4	136	LC 'P' L0730 (BRIGGS)
	Slate 5	41	IE31 (FUTURE DEVICE BY OTHERS)		Slate 5	89	IE25A*		Slate 5	137	LC 'O' L0729 (CHERRY HILL)
	White 6	42	IE31 (FUTURE DEVICE BY OTHERS)		White 6	90	IE25A*		White 6	138	LC 'O' L0729 (CHERRY HILL)
	Red 7	43	IE31 (FUTURE DEVICE BY OTHERS)		Red 7	91	IE25A*		Red 7	139	LC 'O' L0729 (CHERRY HILL)
	Black 8	44	IE31 (FUTURE DEVICE BY OTHERS)		Black 8	92	IE25A*		Black 8	140	LC 'O' L0729 (CHERRY HILL)
	Yellow 9	45	IE30D (FUTURE DEVICE BY OTHERS)		Yellow 9	93	IE25/CABINET 57*		Yellow 9	141	US 6 MOVEABLE BRIDGES (FUTURE CONNECTION BY OTHERS)
	Violet 10	46	IE30D (FUTURE DEVICE BY OTHERS)		Violet 10	94	IE25/CABINET 57*		Violet 10	142	US 6 MOVEABLE BRIDGES (FUTURE CONNECTION BY OTHERS)
	Rose 11	47	IE30D (FUTURE DEVICE BY OTHERS)		Rose 11	95	IE25/CABINET 57*		Rose 11	143	US 6 MOVEABLE BRIDGES (FUTURE CONNECTION BY OTHERS)
	Aqua 12	48	IE30D (FUTURE DEVICE BY OTHERS)		Aqua 12	96	IE25/CABINET 57*		Aqua 12	144	US 6 MOVEABLE BRIDGES (FUTURE CONNECTION BY OTHERS)

*INDICATES LOCATION IS SPLICED WITHIN DCF-IE-006 SEGMENT.

MODEL: 2D SHEET H
FILE NAME: C:\TRANSYSTEMS\PW_LOCAL\TRANSYSTEMS-PW-01\DMS32656\62R19-SHT-ITS-FIBER-29.DGN

ATLAS TECHNICAL CONSULTANTS, LLC
100 S. WACKER DRIVE, SUITE 400
CHICAGO, IL 60606

USER NAME = SALASL	DESIGNED - JAM	REVISED -	
	DRAWN - JAM	REVISED -	
PLOT SCALE = 0.16666667 ' / IN.	CHECKED - DJM	REVISED -	
PLOT DATE = 11/12/2025	DATE - 11/12/2025	REVISED -	

STATE OF ILLINOIS
DEPARTMENT OF TRANSPORTATION

I-80
DISTRIBUTION FIBER ASSIGNMENTS

SCALE: NONE | SHEET OF SHEETS | STA. TO STA.

F.A.I. RTE.	SECTION	COUNTY	TOTAL SHEETS	SHEET NO.
80	FAI 80 21 VLS	VARIOUS	467	436

CONTRACT NO. 62R19

ILLINOIS | FED. AID PROJECT

DISTRIBUTION CABLE FIBER ASSIGNMENTS		ORIGINATION	CMV-IE-WB-26D
DISTRIBUTION CABLE DESIGNATION	DCF-IE-006 (FIBERS 145 - 288)	DESTINATION	FIBER OPTIC INTERCONNECT CABINET, EAST OF US 30

BUFFER TUBE	FIBER	FIBER NO	ASSIGNMENT	BUFFER TUBE	FIBER NO	FIBER NO	ASSIGNMENT	BUFFER TUBE	FIBER	FIBER NO	ASSIGNMENT
BLUE	Blue 1	145	IE36 (FUTURE CONNECTION)	SLATE	Blue 1	193	IE29	YELLOW	Blue 1	241	CABINET 47
	Orange 2	146	IE36 (FUTURE CONNECTION)		Orange 2	194	IE29		Orange 2	242	CABINET 47
	Green 3	147	IE36 (FUTURE CONNECTION)		Green 3	195	IE29		Green 3	243	CABINET 47
	Brown 4	148	IE36 (FUTURE CONNECTION)		Brown 4	196	IE29		Brown 4	244	CABINET 47
	Slate 5	149	IE35A (FUTURE CONNECTION)		Slate 5	197	IE28B		Slate 5	245	IE23
	White 6	150	IE35A (FUTURE CONNECTION)		White 6	198	IE28B		White 6	246	IE23
	Red 7	151	IE35A (FUTURE CONNECTION)		Red 7	199	IE28B		Red 7	247	IE23
	Black 8	152	IE35A (FUTURE CONNECTION)		Black 8	200	IE28B		Black 8	248	IE23
	Yellow 9	153	IE34B (FUTURE CONNECTION)		Yellow 9	201	IE27A		Yellow 9	249	-
	Violet 10	154	IE34B (FUTURE CONNECTION)		Violet 10	202	IE27A		Violet 10	250	-
	Rose 11	155	IE34B (FUTURE CONNECTION)		Rose 11	203	IE27A		Rose 11	251	-
	Aqua 12	156	IE34B (FUTURE CONNECTION)		Aqua 12	204	IE27A		Aqua 12	252	-
ORANGE	Blue 1	157	IE34A (FUTURE CONNECTION)	WHITE	Blue 1	205	IE26B	VIOLET	Blue 1	253	DMS48 (FUTURE CONNECTION)
	Orange 2	158	IE34A (FUTURE CONNECTION)		Orange 2	206	IE26B		Orange 2	254	DMS48 (FUTURE CONNECTION)
	Green 3	159	IE34A (FUTURE CONNECTION)		Green 3	207	IE26B		Green 3	255	DMS48 (FUTURE CONNECTION)
	Brown 4	160	IE34A (FUTURE CONNECTION)		Brown 4	208	IE26B		Brown 4	256	DMS48 (FUTURE CONNECTION)
	Slate 5	161	IE33A (FUTURE CONNECTION)		Slate 5	209	IE26A		Slate 5	257	DMS41
	White 6	162	IE33A (FUTURE CONNECTION)		White 6	210	IE26A		White 6	258	DMS41
	Red 7	163	IE33A (FUTURE CONNECTION)		Red 7	211	IE26A		Red 7	259	DMS41
	Black 8	164	IE33A (FUTURE CONNECTION)		Black 8	212	IE26A		Black 8	260	DMS41
	Yellow 9	165	IE32D (FUTURE CONNECTION)		Yellow 9	213	CABINET 58		Yellow 9	261	TS 7536 (LARKIN) (FUTURE CONNECTION)
	Violet 10	166	IE32D (FUTURE CONNECTION)		Violet 10	214	CABINET 58		Violet 10	262	TS 7536 (LARKIN) (FUTURE CONNECTION)
	Rose 11	167	IE32D (FUTURE CONNECTION)		Rose 11	215	CABINET 58		Rose 11	263	TS 7536 (LARKIN) (FUTURE CONNECTION)
	Aqua 12	168	IE32D (FUTURE CONNECTION)		Aqua 12	216	CABINET 58		Aqua 12	264	TS 7536 (LARKIN) (FUTURE CONNECTION)
GREEN	Blue 1	169	IE32C (FUTURE CONNECTION)	RED	Blue 1	217	IE24	ROSE	Blue 1	265	TS 21835 (CENTER) (FUTURE TS BY OTHERS)
	Orange 2	170	IE32C (FUTURE CONNECTION)		Orange 2	218	IE24		Orange 2	266	TS 21835 (CENTER) (FUTURE TS BY OTHERS)
	Green 3	171	IE32C (FUTURE CONNECTION)		Green 3	219	IE24		Green 3	267	TS 21835 (CENTER) (FUTURE TS BY OTHERS)
	Brown 4	172	IE32C (FUTURE CONNECTION)		Brown 4	220	IE24		Brown 4	268	TS 21835 (CENTER) (FUTURE TS BY OTHERS)
	Slate 5	173	IE31B (FUTURE DEVICE BY OTHERS)		Slate 5	221	CABINET 55		Slate 5	269	TS 7390 (RICHARDS)
	White 6	174	IE31B (FUTURE DEVICE BY OTHERS)		White 6	222	CABINET 55		White 6	270	TS 7390 (RICHARDS)
	Red 7	175	IE31B (FUTURE DEVICE BY OTHERS)		Red 7	223	CABINET 55		Red 7	271	TS 7390 (RICHARDS)
	Black 8	176	IE31B (FUTURE DEVICE BY OTHERS)		Black 8	224	CABINET 55		Black 8	272	TS 7390 (RICHARDS)
	Yellow 9	177	IE30C (FUTURE DEVICE BY OTHERS)		Yellow 9	225	CABINET 53		Yellow 9	273	LC 'Y' L0770 (LARKIN) (FUTURE CONNECTION)
	Violet 10	178	IE30C (FUTURE DEVICE BY OTHERS)		Violet 10	226	CABINET 53		Violet 10	274	LC 'Y' L0770 (LARKIN) (FUTURE CONNECTION)
	Rose 11	179	IE30C (FUTURE DEVICE BY OTHERS)		Rose 11	227	CABINET 53		Rose 11	275	LC 'Y' L0770 (LARKIN) (FUTURE CONNECTION)
	Aqua 12	180	IE30C (FUTURE DEVICE BY OTHERS)		Aqua 12	228	CABINET 53		Aqua 12	276	LC 'Y' L0770 (LARKIN) (FUTURE CONNECTION)
BROWN	Blue 1	181	-	BLACK	Blue 1	229	CABINET 51	AQUA	Blue 1	277	LC 'S' L0740 (RICHARDS)
	Orange 2	182	-		Orange 2	230	CABINET 51		Orange 2	278	LC 'S' L0740 (RICHARDS)
	Green 3	183	-		Green 3	231	CABINET 51		Green 3	279	LC 'S' L0740 (RICHARDS)
	Brown 4	184	-		Brown 4	232	CABINET 51		Brown 4	280	LC 'S' L0740 (RICHARDS)
	Slate 5	185	IE30A		Slate 5	233	IE23A		Slate 5	281	-
	White 6	186	IE30A		White 6	234	IE23A		White 6	282	-
	Red 7	187	IE30A		Red 7	235	IE23A		Red 7	283	-
	Black 8	188	IE30A		Black 8	236	IE23A		Black 8	284	-
	Yellow 9	189	IE30		Yellow 9	237	CABINET 49		Yellow 9	285	WILL CO (FUTURE CONNECTION BY OTHERS)
	Violet 10	190	IE30		Violet 10	238	CABINET 49		Violet 10	286	WILL CO (FUTURE CONNECTION BY OTHERS)
	Rose 11	191	IE30		Rose 11	239	CABINET 49		Rose 11	287	WILL CO (FUTURE CONNECTION BY OTHERS)
	Aqua 12	192	IE30		Aqua 12	240	CABINET 49		Aqua 12	288	WILL CO (FUTURE CONNECTION BY OTHERS)

*INDICATES LOCATION IS SPLICED WITHIN DCF-IE-006 SEGMENT.

MODEL: 2D SHEET H
FILE NAME: C:\TRANSYSTEMS\PW_LOCAL\TRANSYSTEMS-PW-01\DMS32656\62R19-SHT-ITS-FIBER-30.DGN

ATLAS TECHNICAL CONSULTANTS, LLC
100 S. WACKER DRIVE, SUITE 400
CHICAGO, IL 60606

USER NAME = SALASL	DESIGNED - JAM	REVISED -	
	DRAWN - JAM	REVISED -	
PLOT SCALE = 0.16666667 ' / IN.	CHECKED - DJM	REVISED -	
PLOT DATE = 11/12/2025	DATE - 11/12/2025	REVISED -	

STATE OF ILLINOIS
DEPARTMENT OF TRANSPORTATION

I-80
DISTRIBUTION FIBER ASSIGNMENTS

SCALE: NONE | SHEET OF SHEETS | STA. TO STA.

F.A.I. RTE.	SECTION	COUNTY	TOTAL SHEETS	SHEET NO.
80	FAI 80 21 VLS	VARIOUS	467	437
		CONTRACT NO. 62R19		
	ILLINOIS	FED. AID PROJECT		

DISTRIBUTION CABLE FIBER ASSIGNMENTS		ORIGINATION	FIBER OPTIC INTERCONNECT CABINET, EAST OF US 30
DISTRIBUTION CABLE DESIGNATION	DCF-IE-005 (FIBERS 1- 144)	DESTINATION	FIBER OPTIC INTERCONNECT CABINET AT I-80 & I-355

BUFFER TUBE	FIBER	FIBER NO	ASSIGNMENT	BUFFER TUBE	FIBER NO	FIBER NO	ASSIGNMENT	BUFFER TUBE	FIBER	FIBER NO	ASSIGNMENT
BLUE	Blue 1	1	IE37 (FUTURE CONNECTION)	SLATE	Blue 1	49	IE30B (FUTURE DEVICE BY OTHERS)	YELLOW	Blue 1	97	-
	Orange 2	2	IE37 (FUTURE CONNECTION)		Orange 2	50	IE30B (FUTURE DEVICE BY OTHERS)		Orange 2	98	-
	Green 3	3	IE37 (FUTURE CONNECTION)		Green 3	51	IE30B (FUTURE DEVICE BY OTHERS)		Green 3	99	-
	Brown 4	4	IE37 (FUTURE CONNECTION)		Brown 4	52	IE30B (FUTURE DEVICE BY OTHERS)		Brown 4	100	-
	Slate 5	5	IE36B (FUTURE CONNECTION)		Slate 5	53	-		Slate 5	101	DMS47 (@ MIDLAND) (FUTURE CONNECTION)
	White 6	6	IE36B (FUTURE CONNECTION)		White 6	54	-		White 6	102	DMS47 (@ MIDLAND) (FUTURE CONNECTION)
	Red 7	7	IE36B (FUTURE CONNECTION)		Red 7	55	-		Red 7	103	DMS47 (@ MIDLAND) (FUTURE CONNECTION)
	Black 8	8	IE36B (FUTURE CONNECTION)		Black 8	56	-		Black 8	104	DMS47 (@ MIDLAND) (FUTURE CONNECTION)
	Yellow 9	9	IE36A (FUTURE CONNECTION)		Yellow 9	57	IE29B		Yellow 9	105	DMS 47 (@ CHERRY HILL)
	Violet 10	10	IE36A (FUTURE CONNECTION)		Violet 10	58	IE29B		Violet 10	106	DMS 47 (@ CHERRY HILL)
	Rose 11	11	IE36A (FUTURE CONNECTION)		Rose 11	59	IE29B		Rose 11	107	DMS 47 (@ CHERRY HILL)
	Aqua 12	12	IE36A (FUTURE CONNECTION)		Aqua 12	60	IE29B		Aqua 12	108	DMS 47 (@ CHERRY HILL)
ORANGE	Blue 1	13	IE35 (FUTURE CONNECTION)	WHITE	Blue 1	61	IE29A	VIOLET	Blue 1	109	TS 21280 (CHICAGO) (FUTURE TS BY OTHERS)
	Orange 2	14	IE35 (FUTURE CONNECTION)		Orange 2	62	IE29A		Orange 2	110	TS 21280 (CHICAGO) (FUTURE TS BY OTHERS)
	Green 3	15	IE35 (FUTURE CONNECTION)		Green 3	63	IE29A		Green 3	111	TS 21280 (CHICAGO) (FUTURE TS BY OTHERS)
	Brown 4	16	IE35 (FUTURE CONNECTION)		Brown 4	64	IE29A		Brown 4	112	TS 21280 (CHICAGO) (FUTURE TS BY OTHERS)
	Slate 5	17	IE34 (FUTURE CONNECTION)		Slate 5	65	IE28A		Slate 5	113	TS 7393 (BRIGGS)
	White 6	18	IE34 (FUTURE CONNECTION)		White 6	66	IE28A		White 6	114	TS 7393 (BRIGGS)
	Red 7	19	IE34 (FUTURE CONNECTION)		Red 7	67	IE28A		Red 7	115	TS 7393 (BRIGGS)
	Black 8	20	IE34 (FUTURE CONNECTION)		Black 8	68	IE28A		Black 8	116	TS 7393 (BRIGGS)
	Yellow 9	21	IE33 (FUTURE CONNECTION)		Yellow 9	69	IE28		Yellow 9	117	LC 'C' L0346 (I-55) (FUTURE CONNECTION)
	Violet 10	22	IE33 (FUTURE CONNECTION)		Violet 10	70	IE28		Violet 10	118	LC 'C' L0346 (I-55) (FUTURE CONNECTION)
	Rose 11	23	IE33 (FUTURE CONNECTION)		Rose 11	71	IE28		Rose 11	119	LC 'C' L0346 (I-55) (FUTURE CONNECTION)
	Aqua 12	24	IE33 (FUTURE CONNECTION)		Aqua 12	72	IE28		Aqua 12	120	LC 'C' L0346 (I-55) (FUTURE CONNECTION)
GREEN	Blue 1	25	IE32B (FUTURE CONNECTION)	RED	Blue 1	73	IE27	ROSE	Blue 1	121	LC 'Z' L0775 (HOUBOLT) (FUTURE CONNECTION)
	Orange 2	26	IE32B (FUTURE CONNECTION)		Orange 2	74	IE27		Orange 2	122	LC 'Z' L0775 (HOUBOLT) (FUTURE CONNECTION)
	Green 3	27	IE32B (FUTURE CONNECTION)		Green 3	75	IE27		Green 3	123	LC 'Z' L0775 (HOUBOLT) (FUTURE CONNECTION)
	Brown 4	28	IE32B (FUTURE CONNECTION)		Brown 4	76	IE27		Brown 4	124	LC 'Z' L0775 (HOUBOLT) (FUTURE CONNECTION)
	Slate 5	29	IE32A (FUTURE CONNECTION)		Slate 5	77	CABINET 61		Slate 5	125	LC 'X' L0765 (CENTER) (FUTURE LC BY OTHERS)
	White 6	30	IE32A (FUTURE CONNECTION)		White 6	78	CABINET 61		White 6	126	LC 'X' L0765 (CENTER) (FUTURE LC BY OTHERS)
	Red 7	31	IE32A (FUTURE CONNECTION)		Red 7	79	CABINET 61		Red 7	127	LC 'X' L0765 (CENTER) (FUTURE LC BY OTHERS)
	Black 8	32	IE32A (FUTURE CONNECTION)		Black 8	80	CABINET 61		Black 8	128	LC 'X' L0765 (CENTER) (FUTURE LC BY OTHERS)
	Yellow 9	33	IE32 (FUTURE CONNECTION)		Yellow 9	81	CABINET 59/IE25B		Yellow 9	129	LC 'U' L0750 (CHICAGO) (FUTURE LC BY OTHERS)
	Violet 10	34	IE32 (FUTURE CONNECTION)		Violet 10	82	CABINET 59/IE25B		Violet 10	130	LC 'U' L0750 (CHICAGO) (FUTURE LC BY OTHERS)
	Rose 11	35	IE32 (FUTURE CONNECTION)		Rose 11	83	CABINET 59/IE25B		Rose 11	131	LC 'U' L0750 (CHICAGO) (FUTURE LC BY OTHERS)
	Aqua 12	36	IE32 (FUTURE CONNECTION)		Aqua 12	84	CABINET 59/IE25B		Aqua 12	132	LC 'U' L0750 (CHICAGO) (FUTURE LC BY OTHERS)
BROWN	Blue 1	37	IE31A (FUTURE DEVICE BY OTHERS)	BLACK	Blue 1	85	-	AQUA	Blue 1	133	LC 'P' L0730 (BRIGGS)
	Orange 2	38	IE31A (FUTURE DEVICE BY OTHERS)		Orange 2	86	-		Orange 2	134	LC 'P' L0730 (BRIGGS)
	Green 3	39	IE31A (FUTURE DEVICE BY OTHERS)		Green 3	87	-		Green 3	135	LC 'P' L0730 (BRIGGS)
	Brown 4	40	IE31A (FUTURE DEVICE BY OTHERS)		Brown 4	88	-		Brown 4	136	LC 'P' L0730 (BRIGGS)
	Slate 5	41	IE31 (FUTURE DEVICE BY OTHERS)		Slate 5	89	IE25A		Slate 5	137	LC 'O' L0729 (CHERRY HILL)
	White 6	42	IE31 (FUTURE DEVICE BY OTHERS)		White 6	90	IE25A		White 6	138	LC 'O' L0729 (CHERRY HILL)
	Red 7	43	IE31 (FUTURE DEVICE BY OTHERS)		Red 7	91	IE25A		Red 7	139	LC 'O' L0729 (CHERRY HILL)
	Black 8	44	IE31 (FUTURE DEVICE BY OTHERS)		Black 8	92	IE25A		Black 8	140	LC 'O' L0729 (CHERRY HILL)
	Yellow 9	45	IE30D (FUTURE DEVICE BY OTHERS)		Yellow 9	93	IE25/CABINET 57		Yellow 9	141	US 6 MOVEABLE BRIDGES (FUTURE CONNECTION BY OTHERS)
	Violet 10	46	IE30D (FUTURE DEVICE BY OTHERS)		Violet 10	94	IE25/CABINET 57		Violet 10	142	US 6 MOVEABLE BRIDGES (FUTURE CONNECTION BY OTHERS)
	Rose 11	47	IE30D (FUTURE DEVICE BY OTHERS)		Rose 11	95	IE25/CABINET 57		Rose 11	143	US 6 MOVEABLE BRIDGES (FUTURE CONNECTION BY OTHERS)
	Aqua 12	48	IE30D (FUTURE DEVICE BY OTHERS)		Aqua 12	96	IE25/CABINET 57		Aqua 12	144	US 6 MOVEABLE BRIDGES (FUTURE CONNECTION BY OTHERS)

*INDICATES LOCATION IS SPLICED WITHIN DCF-IE-005 SEGMENT.

MODEL: 2D SHEET H
FILE NAME: C:\TRANSYSTEMS\PW_LOCAL\TRANSYSTEMS-PW-01\DMS32656\62R19-SHT-ITS-FIBER-31.DGN

ATLAS TECHNICAL CONSULTANTS, LLC
100 S. WACKER DRIVE, SUITE 400
CHICAGO, IL 60606

USER NAME = SALASL	DESIGNED - JAM	REVISED -	
	DRAWN - JAM	REVISED -	
PLOT SCALE = 0.16666667 ' / IN.	CHECKED - DJM	REVISED -	
PLOT DATE = 11/12/2025	DATE - 11/12/2025	REVISED -	

STATE OF ILLINOIS
DEPARTMENT OF TRANSPORTATION

I-80
DISTRIBUTION FIBER ASSIGNMENTS

SCALE: NONE | SHEET OF SHEETS | STA. TO STA.

F.A.I. RTE.	SECTION	COUNTY	TOTAL SHEETS	SHEET NO.
80	FAI 80 21 VLS	VARIOUS	467	438
		CONTRACT NO. 62R19		
	ILLINOIS	FED. AID PROJECT		

DISTRIBUTION CABLE FIBER ASSIGNMENTS		ORIGINATION	FIBER OPTIC INTERCONNECT CABINET, EAST OF US 30
DISTRIBUTION CABLE DESIGNATION	DCF-IE-005 (FIBERS 145 - 288)	DESTINATION	FIBER OPTIC INTERCONNECT CABINET AT I-80 & I-355

BUFFER TUBE	FIBER	FIBER NO	ASSIGNMENT	BUFFER TUBE	FIBER NO	FIBER NO	ASSIGNMENT	BUFFER TUBE	FIBER	FIBER NO	ASSIGNMENT
BLUE	Blue 1	145	IE36 (FUTURE CONNECTION)	SLATE	Blue 1	193	IE29	YELLOW	Blue 1	241	CABINET 47*
	Orange 2	146	IE36 (FUTURE CONNECTION)		Orange 2	194	IE29		Orange 2	242	CABINET 47*
	Green 3	147	IE36 (FUTURE CONNECTION)		Green 3	195	IE29		Green 3	243	CABINET 47*
	Brown 4	148	IE36 (FUTURE CONNECTION)		Brown 4	196	IE29		Brown 4	244	CABINET 47*
	Slate 5	149	IE35A (FUTURE CONNECTION)		Slate 5	197	IE28B		Slate 5	245	IE23*
	White 6	150	IE35A (FUTURE CONNECTION)		White 6	198	IE28B		White 6	246	IE23*
	Red 7	151	IE35A (FUTURE CONNECTION)		Red 7	199	IE28B		Red 7	247	IE23*
	Black 8	152	IE35A (FUTURE CONNECTION)		Black 8	200	IE28B		Black 8	248	IE23*
	Yellow 9	153	IE34B (FUTURE CONNECTION)		Yellow 9	201	IE27A		Yellow 9	249	-
	Violet 10	154	IE34B (FUTURE CONNECTION)		Violet 10	202	IE27A		Violet 10	250	-
	Rose 11	155	IE34B (FUTURE CONNECTION)		Rose 11	203	IE27A		Rose 11	251	-
	Aqua 12	156	IE34B (FUTURE CONNECTION)		Aqua 12	204	IE27A		Aqua 12	252	-
ORANGE	Blue 1	157	IE34A (FUTURE CONNECTION)	WHITE	Blue 1	205	IE26B	VIOLET	Blue 1	253	DMS48 (FUTURE CONNECTION)
	Orange 2	158	IE34A (FUTURE CONNECTION)		Orange 2	206	IE26B		Orange 2	254	DMS48 (FUTURE CONNECTION)
	Green 3	159	IE34A (FUTURE CONNECTION)		Green 3	207	IE26B		Green 3	255	DMS48 (FUTURE CONNECTION)
	Brown 4	160	IE34A (FUTURE CONNECTION)		Brown 4	208	IE26B		Brown 4	256	DMS48 (FUTURE CONNECTION)
	Slate 5	161	IE33A (FUTURE CONNECTION)		Slate 5	209	IE26A		Slate 5	257	DMS41
	White 6	162	IE33A (FUTURE CONNECTION)		White 6	210	IE26A		White 6	258	DMS41
	Red 7	163	IE33A (FUTURE CONNECTION)		Red 7	211	IE26A		Red 7	259	DMS41
	Black 8	164	IE33A (FUTURE CONNECTION)		Black 8	212	IE26A		Black 8	260	DMS41
	Yellow 9	165	IE32D (FUTURE CONNECTION)		Yellow 9	213	CABINET 58		Yellow 9	261	TS 7536 (LARKIN) (FUTURE CONNECTION)
	Violet 10	166	IE32D (FUTURE CONNECTION)		Violet 10	214	CABINET 58		Violet 10	262	TS 7536 (LARKIN) (FUTURE CONNECTION)
	Rose 11	167	IE32D (FUTURE CONNECTION)		Rose 11	215	CABINET 58		Rose 11	263	TS 7536 (LARKIN) (FUTURE CONNECTION)
	Aqua 12	168	IE32D (FUTURE CONNECTION)		Aqua 12	216	CABINET 58		Aqua 12	264	TS 7536 (LARKIN) (FUTURE CONNECTION)
GREEN	Blue 1	169	IE32C (FUTURE CONNECTION)	RED	Blue 1	217	IE24*	ROSE	Blue 1	265	TS 21835 (CENTER) (FUTURE TS BY OTHERS)
	Orange 2	170	IE32C (FUTURE CONNECTION)		Orange 2	218	IE24*		Orange 2	266	TS 21835 (CENTER) (FUTURE TS BY OTHERS)
	Green 3	171	IE32C (FUTURE CONNECTION)		Green 3	219	IE24*		Green 3	267	TS 21835 (CENTER) (FUTURE TS BY OTHERS)
	Brown 4	172	IE32C (FUTURE CONNECTION)		Brown 4	220	IE24*		Brown 4	268	TS 21835 (CENTER) (FUTURE TS BY OTHERS)
	Slate 5	173	IE31B (FUTURE DEVICE BY OTHERS)		Slate 5	221	CABINET 55*		Slate 5	269	TS 7390 (RICHARDS)
	White 6	174	IE31B (FUTURE DEVICE BY OTHERS)		White 6	222	CABINET 55*		White 6	270	TS 7390 (RICHARDS)
	Red 7	175	IE31B (FUTURE DEVICE BY OTHERS)		Red 7	223	CABINET 55*		Red 7	271	TS 7390 (RICHARDS)
	Black 8	176	IE31B (FUTURE DEVICE BY OTHERS)		Black 8	224	CABINET 55*		Black 8	272	TS 7390 (RICHARDS)
	Yellow 9	177	IE30C (FUTURE DEVICE BY OTHERS)		Yellow 9	225	CABINET 53*		Yellow 9	273	LC 'Y' L0770 (LARKIN) (FUTURE CONNECTION)
	Violet 10	178	IE30C (FUTURE DEVICE BY OTHERS)		Violet 10	226	CABINET 53*		Violet 10	274	LC 'Y' L0770 (LARKIN) (FUTURE CONNECTION)
	Rose 11	179	IE30C (FUTURE DEVICE BY OTHERS)		Rose 11	227	CABINET 53*		Rose 11	275	LC 'Y' L0770 (LARKIN) (FUTURE CONNECTION)
	Aqua 12	180	IE30C (FUTURE DEVICE BY OTHERS)		Aqua 12	228	CABINET 53*		Aqua 12	276	LC 'Y' L0770 (LARKIN) (FUTURE CONNECTION)
BROWN	Blue 1	181	-	BLACK	Blue 1	229	CABINET 51*	AQUA	Blue 1	277	LC 'S' L0740 (RICHARDS)
	Orange 2	182	-		Orange 2	230	CABINET 51*		Orange 2	278	LC 'S' L0740 (RICHARDS)
	Green 3	183	-		Green 3	231	CABINET 51*		Green 3	279	LC 'S' L0740 (RICHARDS)
	Brown 4	184	-		Brown 4	232	CABINET 51*		Brown 4	280	LC 'S' L0740 (RICHARDS)
	Slate 5	185	IE30A		Slate 5	233	IE23A*		Slate 5	281	-
	White 6	186	IE30A		White 6	234	IE23A*		White 6	282	-
	Red 7	187	IE30A		Red 7	235	IE23A*		Red 7	283	-
	Black 8	188	IE30A		Black 8	236	IE23A*		Black 8	284	-
	Yellow 9	189	IE30		Yellow 9	237	CABINET 49*		Yellow 9	285	WILL CO (FUTURE CONNECTION BY OTHERS)
	Violet 10	190	IE30		Violet 10	238	CABINET 49*		Violet 10	286	WILL CO (FUTURE CONNECTION BY OTHERS)
	Rose 11	191	IE30		Rose 11	239	CABINET 49*		Rose 11	287	WILL CO (FUTURE CONNECTION BY OTHERS)
	Aqua 12	192	IE30		Aqua 12	240	CABINET 49*		Aqua 12	288	WILL CO (FUTURE CONNECTION BY OTHERS)

*INDICATES LOCATION IS SPLICED WITHIN DCF-IE-005 SEGMENT.

MODEL: 2D SHEET H
FILE NAME: C:\TRANSYSTEMS\PW_LOCAL\TRANSYSTEMS-PW-01\DMS32656\62R19-SHT-ITS-FIBER-32.DGN

ATLAS TECHNICAL CONSULTANTS, LLC
100 S. WACKER DRIVE, SUITE 400
CHICAGO, IL 60606

USER NAME = SALASL	DESIGNED - JAM	REVISED -	
	DRAWN - JAM	REVISED -	
PLOT SCALE = 0.16666667 ' / IN.	CHECKED - DJM	REVISED -	
PLOT DATE = 11/12/2025	DATE - 11/12/2025	REVISED -	

STATE OF ILLINOIS
DEPARTMENT OF TRANSPORTATION

I-80
DISTRIBUTION FIBER ASSIGNMENTS

SCALE: NONE | SHEET OF SHEETS | STA. TO STA.

F.A.I. RTE.	SECTION	COUNTY	TOTAL SHEETS	SHEET NO.
80	FAI 80 21 VLS	VARIOUS	467	439

CONTRACT NO. 62R19
ILLINOIS FED. AID PROJECT

LATERAL CABLE FIBER ASSIGNMENTS		VAULT ID: CMV-IE-EB-40C
LCF-IE-EB-013C		SITE ID: IE40A
FIBER NO	FUNCTION	CONNECTION
1	NETWORK SWITCH SFP PORT 1	DCF-IE-EB-013, FIBER 21 (EAST)
2	NETWORK SWITCH SFP PORT 1	DCF-IE-EB-013, FIBER 22 (EAST)
3	NETWORK SWITCH SFP PORT 2	DCF-IE-EB-013, FIBER 23 (EAST)
4	NETWORK SWITCH SFP PORT 2	DCF-IE-EB-013, FIBER 24 (EAST)
5		
6		
7		
8		
9		
10		
11		
12		

LATERAL CABLE FIBER ASSIGNMENTS		VAULT ID: CMV-IE-EB-40A
LCF-IE-EB-012E		SITE ID: IE39B
FIBER NO	FUNCTION	CONNECTION
1	NETWORK SWITCH SFP PORT 1	DCF-IE-EB-012, FIBER 13 (EAST)
2	NETWORK SWITCH SFP PORT 1	DCF-IE-EB-012, FIBER 14 (EAST)
3		DCF-IE-EB-012, FIBER 15 (EAST)
4		DCF-IE-EB-012, FIBER 16 (EAST)
5	NETWORK SWITCH SFP PORT 2	DCF-IE-EB-012, FIBER 13 (WEST)
6	NETWORK SWITCH SFP PORT 2	DCF-IE-EB-012, FIBER 14 (WEST)
7		DCF-IE-EB-012, FIBER 15 (WEST)
8		DCF-IE-EB-012, FIBER 16 (WEST)
9		
10		
11		
12		

LATERAL CABLE FIBER ASSIGNMENTS		VAULT ID: CMV-IE-EB-40B
LCF-IE-EB-013B		SITE ID: IE40
FIBER NO	FUNCTION	CONNECTION
1	NETWORK SWITCH SFP PORT 1	DCF-IE-EB-013, FIBER 17 (EAST)
2	NETWORK SWITCH SFP PORT 1	DCF-IE-EB-013, FIBER 18 (EAST)
3		
4		
5	NETWORK SWITCH SFP PORT 2	DCF-IE-EB-013, FIBER 19 (EAST)
6	NETWORK SWITCH SFP PORT 2	DCF-IE-EB-013, FIBER 20 (EAST)
7		
8		
9		
10		
11		
12		

LATERAL CABLE FIBER ASSIGNMENTS		VAULT ID: CMV-IE-EB-39C
LCF-IE-EB-012D		SITE ID: DMS-46
FIBER NO	FUNCTION	CONNECTION
1	NETWORK SWITCH SFP PORT 1	DCF-IE-EB-012, FIBER 25 (EAST)
2	NETWORK SWITCH SFP PORT 1	DCF-IE-EB-012, FIBER 26 (EAST)
3		DCF-IE-EB-012, FIBER 27 (EAST)
4		DCF-IE-EB-012, FIBER 28 (EAST)
5	NETWORK SWITCH SFP PORT 2	DCF-IE-EB-012, FIBER 25 (WEST)
6	NETWORK SWITCH SFP PORT 2	DCF-IE-EB-012, FIBER 26 (WEST)
7		DCF-IE-EB-012, FIBER 27 (WEST)
8		DCF-IE-EB-012, FIBER 28 (WEST)
9		
10		
11		
12		

LATERAL CABLE FIBER ASSIGNMENTS		VAULT ID: CMV-IE-EB-39B
LCF-IE-EB-012C		SITE ID: IE39A
FIBER NO	FUNCTION	CONNECTION
1	NETWORK SWITCH SFP PORT 1	DCF-IE-EB-012, FIBER 9 (EAST)
2	NETWORK SWITCH SFP PORT 1	DCF-IE-EB-012, FIBER 10 (EAST)
3		DCF-IE-EB-012, FIBER 11 (EAST)
4		DCF-IE-EB-012, FIBER 12 (EAST)
5	NETWORK SWITCH SFP PORT 2	DCF-IE-EB-012, FIBER 9 (WEST)
6	NETWORK SWITCH SFP PORT 2	DCF-IE-EB-012, FIBER 10 (WEST)
7		DCF-IE-EB-012, FIBER 11 (WEST)
8		DCF-IE-EB-012, FIBER 12 (WEST)
9		
10		
11		
12		

LATERAL CABLE FIBER ASSIGNMENTS		VAULT ID: CMV-IE-EB-37J
LCF-IE-WB-012A		SITE ID: IE37D
FIBER NO	FUNCTION	CONNECTION
1	NETWORK SWITCH SFP PORT 1	DCF-IE-EB-012, FIBER 1 (EAST)
2	NETWORK SWITCH SFP PORT 1	DCF-IE-EB-012, FIBER 2 (EAST)
3		DCF-IE-EB-012, FIBER 3 (EAST)
4		DCF-IE-EB-012, FIBER 4 (EAST)
5	NETWORK SWITCH SFP PORT 2	DCF-IE-EB-012, FIBER 1 (WEST)
6	NETWORK SWITCH SFP PORT 2	DCF-IE-EB-012, FIBER 2 (WEST)
7		DCF-IE-EB-012, FIBER 3 (WEST)
8		DCF-IE-EB-012, FIBER 4 (WEST)
9		
10		
11		
12		

LATERAL CABLE FIBER ASSIGNMENTS		VAULT ID: CMV-IE-EB-39A
LCF-IE-EB-012B		SITE ID: IE39
FIBER NO	FUNCTION	CONNECTION
1	NETWORK SWITCH SFP PORT 1	DCF-IE-EB-012, FIBER 5 (EAST)
2	NETWORK SWITCH SFP PORT 1	DCF-IE-EB-012, FIBER 6 (EAST)
3		DCF-IE-EB-012, FIBER 7 (EAST)
4		DCF-IE-EB-012, FIBER 8 (EAST)
5	NETWORK SWITCH SFP PORT 2	DCF-IE-EB-012, FIBER 5 (WEST)
6	NETWORK SWITCH SFP PORT 2	DCF-IE-EB-012, FIBER 6 (WEST)
7		DCF-IE-EB-012, FIBER 7 (WEST)
8		DCF-IE-EB-012, FIBER 8 (WEST)
9		
10		
11		
12		

LATERAL CABLE FIBER ASSIGNMENTS		VAULT ID: CMV-IE-EB-36A
LCF-IE-EB-010E		SITE ID: IE36
FIBER NO	FUNCTION	CONNECTION
1	NETWORK SWITCH SFP PORT 1	DCF-IE-EB-010, FIBER 1 (WEST)
2	NETWORK SWITCH SFP PORT 1	DCF-IE-EB-010, FIBER 2 (WEST)
3		DCF-IE-EB-010, FIBER 3 (WEST)
4		DCF-IE-EB-010, FIBER 4 (WEST)
5	NETWORK SWITCH SFP PORT 2	DCF-IE-EB-010, FIBER 1 (EAST)
6	NETWORK SWITCH SFP PORT 2	DCF-IE-EB-010, FIBER 2 (EAST)
7		DCF-IE-EB-010, FIBER 3 (EAST)
8		DCF-IE-EB-010, FIBER 4 (EAST)
9		
10		
11		
12		

LATERAL CABLE FIBER ASSIGNMENTS		VAULT ID: CMV-IE-EB-35D
LCF-IE-EB-010D		SITE ID: IE35A
FIBER NO	FUNCTION	CONNECTION
1	NETWORK SWITCH SFP PORT 1	DCF-IE-EB-010, FIBER 5 (WEST)
2	NETWORK SWITCH SFP PORT 1	DCF-IE-EB-010, FIBER 6 (WEST)
3		DCF-IE-EB-010, FIBER 7 (WEST)
4		DCF-IE-EB-010, FIBER 8 (WEST)
5	NETWORK SWITCH SFP PORT 2	DCF-IE-EB-010, FIBER 5 (EAST)
6	NETWORK SWITCH SFP PORT 2	DCF-IE-EB-010, FIBER 6 (EAST)
7		DCF-IE-EB-010, FIBER 7 (EAST)
8		DCF-IE-EB-010, FIBER 8 (EAST)
9		
10		
11		
12		

LATERAL CABLE FIBER ASSIGNMENTS		VAULT ID: CMV-IE-EB-34B
LCF-IE-EB-010B		SITE ID: IE34A
FIBER NO	FUNCTION	CONNECTION
1	NETWORK SWITCH SFP PORT 1	DCF-IE-EB-010, FIBER 13 (WEST)
2	NETWORK SWITCH SFP PORT 1	DCF-IE-EB-010, FIBER 14 (WEST)
3		DCF-IE-EB-010, FIBER 15 (WEST)
4		DCF-IE-EB-010, FIBER 16 (WEST)
5	NETWORK SWITCH SFP PORT 2	DCF-IE-EB-009, FIBER 13 (EAST)
6	NETWORK SWITCH SFP PORT 2	DCF-IE-EB-009, FIBER 14 (EAST)
7		DCF-IE-EB-009, FIBER 15 (EAST)
8		DCF-IE-EB-009, FIBER 16 (EAST)
9		
10		
11		
12		

LATERAL CABLE FIBER ASSIGNMENTS		VAULT ID: CMV-IE-EB-34C
LCF-IE-EB-010C		SITE ID: IE34B
FIBER NO	FUNCTION	CONNECTION
1	NETWORK SWITCH SFP PORT 1	DCF-IE-EB-010, FIBER 9 (WEST)
2	NETWORK SWITCH SFP PORT 1	DCF-IE-EB-010, FIBER 10 (WEST)
3		DCF-IE-EB-010, FIBER 11 (WEST)
4		DCF-IE-EB-010, FIBER 12 (WEST)
5	NETWORK SWITCH SFP PORT 2	DCF-IE-EB-010, FIBER 9 (EAST)
6	NETWORK SWITCH SFP PORT 2	DCF-IE-EB-010, FIBER 10 (EAST)
7		DCF-IE-EB-010, FIBER 11 (EAST)
8		DCF-IE-EB-010, FIBER 12 (EAST)
9		
10		
11		
12		

LATERAL CABLE FIBER ASSIGNMENTS		VAULT ID: CMV-IE-EB-34B
LCF-IE-EB-010A		SITE ID: DMS-48
FIBER NO	FUNCTION	CONNECTION
1	NETWORK SWITCH SFP PORT 1	DCF-IE-EB-010, FIBER 109 (WEST)
2	NETWORK SWITCH SFP PORT 1	DCF-IE-EB-010, FIBER 110 (WEST)
3		DCF-IE-EB-010, FIBER 111 (WEST)
4		DCF-IE-EB-010, FIBER 112 (WEST)
5	NETWORK SWITCH SFP PORT 2	DCF-IE-EB-009, FIBER 109 (EAST)
6	NETWORK SWITCH SFP PORT 2	DCF-IE-EB-009, FIBER 110 (EAST)
7		DCF-IE-EB-009, FIBER 111 (EAST)
8		DCF-IE-EB-009, FIBER 112 (EAST)
9		
10		
11		
12		

MODEL: 2D SHEET H
FILE NAME: C:\TRANSYSTEMS\PW_LOCAL\TRANSYSTEMS-PW-01\DMS32656\62R19-SHT-ITS-FIBER-35.DGN

ATLAS
ATLAS TECHNICAL CONSULTANTS, LLC
100 S. WACKER DRIVE, SUITE 400
CHICAGO, IL 60606

USER NAME = SALASL	DESIGNED - JAM	REVISED -	
	DRAWN - JAM	REVISED -	
PLOT SCALE = 0.16666667 ' / IN.	CHECKED - DJM	REVISED -	
PLOT DATE = 11/12/2025	DATE - 11/12/2025	REVISED -	

STATE OF ILLINOIS
DEPARTMENT OF TRANSPORTATION

I-80
LATERAL FIBER ASSIGNMENTS

SCALE: NONE | SHEET OF SHEETS | STA. TO STA.

F.A.I. RTE.	SECTION	COUNTY	TOTAL SHEETS	SHEET NO.
80	FAI 80 21 VLS	VARIOUS	467	442
		CONTRACT NO. 62R19		
	ILLINOIS	FED. AID PROJECT		

LATERAL CABLE FIBER ASSIGNMENTS		VAULT ID: CMV-IE-EB-33B
LCF-IE-EB-009E		SITE ID: IE33A
FIBER NO	FUNCTION	CONNECTION
1	NETWORK SWITCH SFP PORT 1	DCF-IE-EB-009, FIBER 17 (WEST)
2	NETWORK SWITCH SFP PORT 1	DCF-IE-EB-009, FIBER 18 (WEST)
3		DCF-IE-EB-009, FIBER 19 (WEST)
4		DCF-IE-EB-009, FIBER 20 (WEST)
5	NETWORK SWITCH SFP PORT 2	DCF-IE-EB-009, FIBER 17 (EAST)
6	NETWORK SWITCH SFP PORT 2	DCF-IE-EB-009, FIBER 18 (EAST)
7		DCF-IE-EB-009, FIBER 19 (EAST)
8		DCF-IE-EB-009, FIBER 20 (EAST)
9		
10		
11		
12		

LATERAL CABLE FIBER ASSIGNMENTS		VAULT ID: CMV-IE-EB-32H
LCF-IE-EB-009D		SITE ID: TS (LARKIN)
FIBER NO	FUNCTION	CONNECTION
1		DCF-IE-EB-009, FIBER 117 (WEST)
2		DCF-IE-EB-009, FIBER 118 (WEST)
3		DCF-IE-EB-009, FIBER 119 (WEST)
4		DCF-IE-EB-009, FIBER 120 (WEST)
5		DCF-IE-EB-009, FIBER 117 (EAST)
6		DCF-IE-EB-009, FIBER 118 (EAST)
7		DCF-IE-EB-009, FIBER 119 (EAST)
8		DCF-IE-EB-009, FIBER 120 (EAST)
9		
10		
11		
12		

LATERAL CABLE FIBER ASSIGNMENTS		VAULT ID: CMV-IE-EB-32G
LCF-IE-EB-009C		SITE ID: IE32D
FIBER NO	FUNCTION	CONNECTION
1	NETWORK SWITCH SFP PORT 1	DCF-IE-EB-009, FIBER 21(WEST)
2	NETWORK SWITCH SFP PORT 1	DCF-IE-EB-009, FIBER 22 (WEST)
3		DCF-IE-EB-009, FIBER 23 (WEST)
4		DCF-IE-EB-009, FIBER 24 (WEST)
5	NETWORK SWITCH SFP PORT 2	DCF-IE-EB-009, FIBER 21(EAST)
6	NETWORK SWITCH SFP PORT 2	DCF-IE-EB-009, FIBER 22 (EAST)
7		DCF-IE-EB-009, FIBER 23 (EAST)
8		DCF-IE-EB-009, FIBER 24 (EAST)
9		
10		
11		
12		

LATERAL CABLE FIBER ASSIGNMENTS		VAULT ID: CMV-IE-EB-32E
LCF-IE-EB-009B		SITE ID: IE32C
FIBER NO	FUNCTION	CONNECTION
1	NETWORK SWITCH SFP PORT 1	DCF-IE-EB-009, FIBER 25 (WEST)
2	NETWORK SWITCH SFP PORT 1	DCF-IE-EB-009, FIBER 26 (WEST)
3		DCF-IE-EB-009, FIBER 27 (WEST)
4		DCF-IE-EB-009, FIBER 28 (WEST)
5	NETWORK SWITCH SFP PORT 2	DCF-IE-EB-009, FIBER 25 (EAST)
6	NETWORK SWITCH SFP PORT 2	DCF-IE-EB-009, FIBER 26 (EAST)
7		DCF-IE-EB-009, FIBER 27 (EAST)
8		DCF-IE-EB-009, FIBER 28 (EAST)
9		
10		
11		
12		

LATERAL CABLE FIBER ASSIGNMENTS		VAULT ID: CMV-IE-EB-32C
LCF-IE-EB-009A		SITE ID: LC (LARKIN)
FIBER NO	FUNCTION	CONNECTION
1		DCF-IE-EB-009, FIBER 129 (WEST)
2		DCF-IE-EB-009, FIBER 130 (WEST)
3		DCF-IE-EB-009, FIBER 131(WEST)
4		DCF-IE-EB-009, FIBER 132 (WEST)
5		DCF-IE-EB-009, FIBER 129 (EAST)
6		DCF-IE-EB-009, FIBER 130 (EAST)
7		DCF-IE-EB-009, FIBER 131(EAST)
8		DCF-IE-EB-009, FIBER 132 (EAST)
9		
10		
11		
12		

LATERAL CABLE FIBER ASSIGNMENTS		VAULT ID: CMV-IE-EB-30E
LCF-IE-EB-007J		SITE ID: TS (RICHARDS)
FIBER NO	FUNCTION	CONNECTION
1		DCF-IE-EB-007, FIBER 125
2		DCF-IE-EB-007, FIBER 126
3		DCF-IE-EB-007, FIBER 127
4		DCF-IE-EB-007, FIBER 128
5		DCF-IE-WB-007, FIBER 125
6		DCF-IE-WB-007, FIBER 126
7		DCF-IE-WB-007, FIBER 127
8		DCF-IE-WB-007, FIBER 128
9		
10		
11		
12		

LATERAL CABLE FIBER ASSIGNMENTS		VAULT ID: CMV-IE-EB-30E
LCF-IE-EB-007K		SITE ID: IE30A
FIBER NO	FUNCTION	CONNECTION
1	NETWORK SWITCH SFP PORT 1	DCF-IE-EB-007, FIBER 41
2	NETWORK SWITCH SFP PORT 1	DCF-IE-EB-007, FIBER 42
3		DCF-IE-EB-007, FIBER 43
4		DCF-IE-EB-007, FIBER 44
5	NETWORK SWITCH SFP PORT 2	DCF-IE-WB-007, FIBER 41
6	NETWORK SWITCH SFP PORT 2	DCF-IE-WB-007, FIBER 42
7		DCF-IE-WB-007, FIBER 43
8		DCF-IE-WB-007, FIBER 44
9		
10		
11		
12		

LATERAL CABLE FIBER ASSIGNMENTS		VAULT ID: CMV-IE-EB-30B
LCF-IE-EB-007H		SITE ID: LC (RICHARDS)
FIBER NO	FUNCTION	CONNECTION
1		DCF-IE-EB-007, FIBER 133 (EAST)
2		DCF-IE-EB-007, FIBER 134 (EAST)
3		DCF-IE-EB-007, FIBER 135 (EAST)
4		DCF-IE-EB-007, FIBER 136 (EAST)
5		DCF-IE-EB-007, FIBER 133 (WEST)
6		DCF-IE-EB-007, FIBER 134 (WEST)
7		DCF-IE-EB-007, FIBER 135 (WEST)
8		DCF-IE-EB-007, FIBER 136 (WEST)
9		
10		
11		
12		

MODEL: 2D SHEET H
FILE NAME: C:\TRANSYSTEMS\PW_LOCAL\TRANSYSTEMS-PW-01\DMS32656\62R19-SHT-ITS-FIBER-37.DGN

ATLAS
ATLAS TECHNICAL CONSULTANTS, LLC
100 S. WACKER DRIVE, SUITE 400
CHICAGO, IL 60606

USER NAME = SALASL	DESIGNED - JAM	REVISED -	
	DRAWN - JAM	REVISED -	
PLOT SCALE = 0.16666667 ' / IN.	CHECKED - DJM	REVISED -	
PLOT DATE = 11/12/2025	DATE - 11/12/2025	REVISED -	

STATE OF ILLINOIS
DEPARTMENT OF TRANSPORTATION

I-80
LATERAL FIBER ASSIGNMENTS

SCALE: NONE | SHEET OF SHEETS | STA. TO STA.

F.A.I. RTE.	SECTION	COUNTY	TOTAL SHEETS	SHEET NO.
80	FAI 80 21 VLS	VARIOUS	467	444
		CONTRACT NO. 62R19		
	ILLINOIS	FED. AID PROJECT		

LATERAL CABLE FIBER ASSIGNMENTS		VAULT ID: CMV-IE-EB-30B
LCF-IE-EB-007I		SITE ID: IE30
FIBER NO	FUNCTION	CONNECTION
1	NETWORK SWITCH SFP PORT 1	DCF-IE-EB-007, FIBER 45 (EAST)
2	NETWORK SWITCH SFP PORT 1	DCF-IE-EB-007, FIBER 46 (EAST)
3		DCF-IE-EB-007, FIBER 47 (EAST)
4		DCF-IE-EB-007, FIBER 48 (EAST)
5	NETWORK SWITCH SFP PORT 2	DCF-IE-EB-007, FIBER 45 (WEST)
6	NETWORK SWITCH SFP PORT 2	DCF-IE-EB-007, FIBER 46 (WEST)
7		DCF-IE-EB-007, FIBER 47 (WEST)
8		DCF-IE-EB-007, FIBER 48 (WEST)
9		
10		
11		
12		

LATERAL CABLE FIBER ASSIGNMENTS		VAULT ID: CMV-IE-EB-28C
LCF-IE-EB-007F		SITE ID: IE28B
FIBER NO	FUNCTION	CONNECTION
1	NETWORK SWITCH SFP PORT 1	DCF-IE-EB-007, FIBER 53 (EAST)
2	NETWORK SWITCH SFP PORT 1	DCF-IE-EB-007, FIBER 54 (EAST)
3		DCF-IE-EB-007, FIBER 55 (EAST)
4		DCF-IE-EB-007, FIBER 56 (EAST)
5	NETWORK SWITCH SFP PORT 2	DCF-IE-EB-007, FIBER 53 (WEST)
6	NETWORK SWITCH SFP PORT 2	DCF-IE-EB-007, FIBER 54 (WEST)
7		DCF-IE-EB-007, FIBER 55 (WEST)
8		DCF-IE-EB-007, FIBER 56 (WEST)
9		
10		
11		
12		

LATERAL CABLE FIBER ASSIGNMENTS		VAULT ID: CMV-IE-EB-29A
LCF-IE-EB-007G		SITE ID: IE29
FIBER NO	FUNCTION	CONNECTION
1	NETWORK SWITCH SFP PORT 1	DCF-IE-EB-007, FIBER 49 (EAST)
2	NETWORK SWITCH SFP PORT 1	DCF-IE-EB-007, FIBER 50 (EAST)
3		DCF-IE-EB-007, FIBER 51 (EAST)
4		DCF-IE-EB-007, FIBER 52 (EAST)
5	NETWORK SWITCH SFP PORT 2	DCF-IE-EB-007, FIBER 49 (WEST)
6	NETWORK SWITCH SFP PORT 2	DCF-IE-EB-007, FIBER 50 (WEST)
7		DCF-IE-EB-007, FIBER 51 (WEST)
8		DCF-IE-EB-007, FIBER 52 (WEST)
9		
10		
11		
12		

LATERAL CABLE FIBER ASSIGNMENTS		VAULT ID: CMV-IE-EB-27B
LCF-IE-EB-007E		SITE ID: IE27A
FIBER NO	FUNCTION	CONNECTION
1	NETWORK SWITCH SFP PORT 1	DCF-IE-EB-007, FIBER 57 (EAST)
2	NETWORK SWITCH SFP PORT 1	DCF-IE-EB-007, FIBER 58 (EAST)
3		DCF-IE-EB-007, FIBER 59 (EAST)
4		DCF-IE-EB-007, FIBER 60 (EAST)
5	NETWORK SWITCH SFP PORT 2	DCF-IE-EB-007, FIBER 57 (WEST)
6	NETWORK SWITCH SFP PORT 2	DCF-IE-EB-007, FIBER 58 (WEST)
7		DCF-IE-EB-007, FIBER 59 (WEST)
8		DCF-IE-EB-007, FIBER 60 (WEST)
9		
10		
11		
12		

MODEL: 2D SHEET H
FILE NAME: C:\TRANSYSTEMS\PW_LOCAL\TRANSYSTEMS-PW-01\DMS32656\62R19-SHT-ITS-FIBER-38.DGN

ATLAS
ATLAS TECHNICAL CONSULTANTS, LLC
100 S. WACKER DRIVE, SUITE 400
CHICAGO, IL 60606

USER NAME = SALASL	DESIGNED - JAM	REVISED -	
	DRAWN - JAM	REVISED -	
PLOT SCALE = 0.16666667 ' / IN.	CHECKED - DJM	REVISED -	
PLOT DATE = 11/12/2025	DATE - 11/12/2025	REVISED -	

STATE OF ILLINOIS
DEPARTMENT OF TRANSPORTATION

I-80
LATERAL FIBER ASSIGNMENTS

SCALE: NONE | SHEET OF SHEETS | STA. TO STA.

F.A.I. RTE.	SECTION	COUNTY	TOTAL SHEETS	SHEET NO.
80	FAI 80 21 VLS	VARIOUS	467	445
		CONTRACT NO. 62R19		
	ILLINOIS	FED. AID PROJECT		

LATERAL CABLE FIBER ASSIGNMENTS		VAULT ID: CMV-IE-EB-27B
LCF-IE-EB-007D		SITE ID: DMS-41
FIBER NO	FUNCTION	CONNECTION
1	NETWORK SWITCH SFP PORT 1	DCF-IE-EB-007, FIBER 113 (WEST)
2	NETWORK SWITCH SFP PORT 1	DCF-IE-EB-007, FIBER 114 (WEST)
3		DCF-IE-EB-007, FIBER 115 (WEST)
4		DCF-IE-EB-007, FIBER 116 (WEST)
5	NETWORK SWITCH SFP PORT 2	DCF-IE-EB-007, FIBER 113 (EAST)
6	NETWORK SWITCH SFP PORT 2	DCF-IE-EB-007, FIBER 114 (EAST)
7		DCF-IE-EB-007, FIBER 115 (EAST)
8		DCF-IE-EB-007, FIBER 116 (EAST)
9		
10		
11		
12		

LATERAL CABLE FIBER ASSIGNMENTS		VAULT ID: CMV-IE-EB-26D
LCF-IE-EB-007B		SITE ID: IE26A
FIBER NO	FUNCTION	CONNECTION
1	NETWORK SWITCH SFP PORT 1	DCF-IE-EB-007, FIBER 65 (WEST)
2	NETWORK SWITCH SFP PORT 1	DCF-IE-EB-007, FIBER 66 (WEST)
3		DCF-IE-EB-007, FIBER 67 (WEST)
4		DCF-IE-EB-007, FIBER 68 (WEST)
5	NETWORK SWITCH SFP PORT 2	DCF-IE-EB-007, FIBER 65 (EAST)
6	NETWORK SWITCH SFP PORT 2	DCF-IE-EB-007, FIBER 66 (EAST)
7		DCF-IE-EB-007, FIBER 67 (EAST)
8		DCF-IE-EB-007, FIBER 68 (EAST)
9		
10		
11		
12		

LATERAL CABLE FIBER ASSIGNMENTS		VAULT ID: CMV-IE-EB-26E
LCF-IE-EB-007C		SITE ID: IE26B
FIBER NO	FUNCTION	CONNECTION
1	NETWORK SWITCH SFP PORT 1	DCF-IE-EB-007, FIBER 61(WEST)
2	NETWORK SWITCH SFP PORT 1	DCF-IE-EB-007, FIBER 62 (WEST)
3		DCF-IE-EB-007, FIBER 63 (WEST)
4		DCF-IE-EB-007, FIBER 64 (WEST)
5	NETWORK SWITCH SFP PORT 2	DCF-IE-EB-007, FIBER 61(EAST)
6	NETWORK SWITCH SFP PORT 2	DCF-IE-EB-007, FIBER 62 (EAST)
7		DCF-IE-EB-007, FIBER 63 (EAST)
8		DCF-IE-EB-007, FIBER 64 (EAST)
9		
10		
11		
12		

LATERAL CABLE FIBER ASSIGNMENTS		VAULT ID: CMV-IE-EB-26A
LCF-IE-EB-007 (E)		SITE ID: CAB 58 (E)
FIBER NO	FUNCTION	CONNECTION
1	NETWORK SWITCH SFP PORT 1	DCF-IE-EB-007, FIBER 69 (WEST)
2	NETWORK SWITCH SFP PORT 1	DCF-IE-EB-007, FIBER 70 (WEST)
3		DCF-IE-EB-007, FIBER 71(WEST)
4		DCF-IE-EB-007, FIBER 72 (WEST)
5	NETWORK SWITCH SFP PORT 2	DCF-IE-EB-007, FIBER 69 (EAST)
6	NETWORK SWITCH SFP PORT 2	DCF-IE-EB-007, FIBER 70 (EAST)
7		DCF-IE-EB-007, FIBER 71(EAST)
8		DCF-IE-EB-007, FIBER 72 (EAST)
9		
10		
11		
12		

LATERAL CABLE FIBER ASSIGNMENTS		VAULT ID: CMV-IE-25F
LCF-IE-EB-006B (E)		SITE ID: IE25A (E)
FIBER NO	FUNCTION	CONNECTION
1	NETWORK SWITCH SFP PORT 1	DCF-IE-006, FIBER 89 (EAST)
2	NETWORK SWITCH SFP PORT 1	DCF-IE-006, FIBER 90 (EAST)
3		DCF-IE-006, FIBER 91 (EAST)
4		DCF-IE-006, FIBER 92 (EAST)
5	NETWORK SWITCH SFP PORT 2	DCF-IE-006, FIBER 89 (WEST)
6	NETWORK SWITCH SFP PORT 2	DCF-IE-006, FIBER 90 (WEST)
7		DCF-IE-006, FIBER 91 (WEST)
8		DCF-IE-006, FIBER 92 (WEST)
9		
10		
11		
12		

LATERAL CABLE FIBER ASSIGNMENTS		VAULT ID: CMV-IE-WB-38E
LCF-IE-WB-012B		SITE ID: IE38A
FIBER NO	FUNCTION	CONNECTION
1	NETWORK SWITCH SFP PORT 1	DCF-IE-WB-012, FIBER 5 (EAST)
2	NETWORK SWITCH SFP PORT 1	DCF-IE-WB-012, FIBER 6 (EAST)
3		DCF-IE-WB-012, FIBER 7 (EAST)
4		DCF-IE-WB-012, FIBER 8 (EAST)
5	NETWORK SWITCH SFP PORT 2	DCF-IE-WB-012, FIBER 5 (WEST)
6	NETWORK SWITCH SFP PORT 2	DCF-IE-WB-012, FIBER 6 (WEST)
7		DCF-IE-WB-012, FIBER 7 (WEST)
8		DCF-IE-WB-012, FIBER 8 (WEST)
9		
10		
11		
12		

LATERAL CABLE FIBER ASSIGNMENTS		VAULT ID: CMV-IE-WB-39A
LCF-IE-WB-012C		SITE ID: IE38B
FIBER NO	FUNCTION	CONNECTION
1	NETWORK SWITCH SFP PORT 1	DCF-IE-WB-012, FIBER 9 (EAST)
2	NETWORK SWITCH SFP PORT 1	DCF-IE-WB-012, FIBER 10 (EAST)
3		DCF-IE-WB-012, FIBER 11 (EAST)
4		DCF-IE-WB-012, FIBER 12 (EAST)
5	NETWORK SWITCH SFP PORT 2	DCF-IE-WB-012, FIBER 9 (WEST)
6	NETWORK SWITCH SFP PORT 2	DCF-IE-WB-012, FIBER 10 (WEST)
7		DCF-IE-WB-012, FIBER 11 (WEST)
8		DCF-IE-WB-012, FIBER 12 (WEST)
9		
10		
11		
12		

LATERAL CABLE FIBER ASSIGNMENTS		VAULT ID: CMV-IE-WB-38C
LCF-IE-WB-012A		SITE ID: IE38
FIBER NO	FUNCTION	CONNECTION
1	NETWORK SWITCH SFP PORT 1	DCF-IE-WB-012, FIBER 1 (EAST)
2	NETWORK SWITCH SFP PORT 1	DCF-IE-WB-012, FIBER 2 (EAST)
3		DCF-IE-WB-012, FIBER 3 (EAST)
4		DCF-IE-WB-012, FIBER 4 (EAST)
5	NETWORK SWITCH SFP PORT 2	DCF-IE-WB-012, FIBER 1 (WEST)
6	NETWORK SWITCH SFP PORT 2	DCF-IE-WB-012, FIBER 2 (WEST)
7		DCF-IE-WB-012, FIBER 3 (WEST)
8		DCF-IE-WB-012, FIBER 4 (WEST)
9		
10		
11		
12		

MODEL: 2D SHEET H
FILE NAME: C:\TRANSYSTEMS\PW_LOCAL\TRANSYSTEMS-PW-01\DMS32656\62R19-SHT-ITS-FIBER-40.DGN

ATLAS
ATLAS TECHNICAL CONSULTANTS, LLC
100 S. WACKER DRIVE, SUITE 400
CHICAGO, IL 60606

USER NAME = SALASL	DESIGNED - JAM	REVISED -	
	DRAWN - JAM	REVISED -	
PLOT SCALE = 0.16666667 ' / IN.	CHECKED - DJM	REVISED -	
PLOT DATE = 11/12/2025	DATE - 11/12/2025	REVISED -	

STATE OF ILLINOIS
DEPARTMENT OF TRANSPORTATION

I-80
LATERAL FIBER ASSIGNMENTS

SCALE: NONE | SHEET OF SHEETS | STA. TO STA.

F.A.I. RTE.	SECTION	COUNTY	TOTAL SHEETS	SHEET NO.
80	FAI 80 21 VLS	VARIOUS	467	447
		CONTRACT NO. 62R19		
	ILLINOIS	FED. AID PROJECT		

LATERAL CABLE FIBER ASSIGNMENTS		VAULT ID: CMV-IE-WB-37G
LCF-IE-WB-010F		SITE ID: LC (I-55)
FIBER NO	FUNCTION	CONNECTION
1		DCF-IE-WB-010, FIBER 117 (WEST)
2		DCF-IE-WB-010, FIBER 118 (WEST)
3		DCF-IE-WB-010, FIBER 119 (WEST)
4		DCF-IE-WB-010, FIBER 120 (WEST)
5		DCF-IE-WB-010, FIBER 117 (EAST)
6		DCF-IE-WB-010, FIBER 118 (EAST)
7		DCF-IE-WB-010, FIBER 119 (EAST)
8		DCF-IE-WB-010, FIBER 120 (EAST)
9		
10		
11		
12		

LATERAL CABLE FIBER ASSIGNMENTS		VAULT ID: CMV-IE-WB-36F
LCF-IE-WB-010D		SITE ID: IE36B
FIBER NO	FUNCTION	CONNECTION
1	NETWORK SWITCH SFP PORT 1	DCF-IE-WB-010, FIBER 5 (WEST)
2	NETWORK SWITCH SFP PORT 1	DCF-IE-WB-010, FIBER 6 (WEST)
3		DCF-IE-WB-010, FIBER 7 (WEST)
4		DCF-IE-WB-010, FIBER 8 (WEST)
5	NETWORK SWITCH SFP PORT 2	DCF-IE-WB-010, FIBER 5 (EAST)
6	NETWORK SWITCH SFP PORT 2	DCF-IE-WB-010, FIBER 6 (EAST)
7		DCF-IE-WB-010, FIBER 7 (EAST)
8		DCF-IE-WB-010, FIBER 8 (EAST)
9		
10		
11		
12		

LATERAL CABLE FIBER ASSIGNMENTS		VAULT ID: CMV-IE-WB-37F
LCF-IE-WB-010E		SITE ID: IE37
FIBER NO	FUNCTION	CONNECTION
1	NETWORK SWITCH SFP PORT 1	DCF-IE-WB-010, FIBER 1(WEST)
2	NETWORK SWITCH SFP PORT 1	DCF-IE-WB-010, FIBER 2 (WEST)
3		DCF-IE-WB-010, FIBER 3 (WEST)
4		DCF-IE-WB-010, FIBER 4 (WEST)
5	NETWORK SWITCH SFP PORT 2	DCF-IE-WB-010, FIBER 1(EAST)
6	NETWORK SWITCH SFP PORT 2	DCF-IE-WB-010, FIBER 2 (EAST)
7		DCF-IE-WB-010, FIBER 3 (EAST)
8		DCF-IE-WB-010, FIBER 4 (EAST)
9		
10		
11		
12		

LATERAL CABLE FIBER ASSIGNMENTS		VAULT ID: CMV-IE-WB-36C
LCF-IE-WB-010C		SITE ID: IE36A
FIBER NO	FUNCTION	CONNECTION
1	NETWORK SWITCH SFP PORT 1	DCF-IE-WB-010, FIBER 9 (WEST)
2	NETWORK SWITCH SFP PORT 1	DCF-IE-WB-010, FIBER 10 (WEST)
3		DCF-IE-WB-010, FIBER 11(WEST)
4		DCF-IE-WB-010, FIBER 12 (WEST)
5	NETWORK SWITCH SFP PORT 2	DCF-IE-WB-010, FIBER 9 (EAST)
6	NETWORK SWITCH SFP PORT 2	DCF-IE-WB-010, FIBER 10 (EAST)
7		DCF-IE-WB-010, FIBER 11(EAST)
8		DCF-IE-WB-010, FIBER 12 (EAST)
9		
10		
11		
12		

MODEL: 2D SHEET H
FILE NAME: C:\TRANSYSTEMS\PW_LOCAL\TRANSYSTEMS-PW-01\DMS32656\62R19-SHT-ITS-FIBER-L1.DGN

ATLAS TECHNICAL CONSULTANTS, LLC
100 S. WACKER DRIVE, SUITE 400
CHICAGO, IL 60606

USER NAME = SALASL	DESIGNED - JAM	REVISED -	
	DRAWN - JAM	REVISED -	
PLOT SCALE = 0.16666667 ' / IN.	CHECKED - DJM	REVISED -	
PLOT DATE = 11/12/2025	DATE - 11/12/2025	REVISED -	

STATE OF ILLINOIS
DEPARTMENT OF TRANSPORTATION

I-80
LATERAL FIBER ASSIGNMENTS

SCALE: NONE | SHEET OF SHEETS | STA. TO STA.

F.A.I. RTE.	SECTION	COUNTY	TOTAL SHEETS	SHEET NO.
80	FAI 80 21 VLS	VARIOUS	467	448

CONTRACT NO. 62R19

ILLINOIS | FED. AID PROJECT

LATERAL CABLE FIBER ASSIGNMENTS		VAULT ID: CMV-IE-WB-35D
LCF-IE-WB-010B		SITE ID: LC (HOUBOLT)
FIBER NO	FUNCTION	CONNECTION
1		DCF-IE-WB-010, FIBER 121 (WEST)
2		DCF-IE-WB-010, FIBER 122 (WEST)
3		DCF-IE-WB-010, FIBER 123 (WEST)
4		DCF-IE-WB-010, FIBER 124 (WEST)
5		DCF-IE-WB-010, FIBER 121 (EAST)
6		DCF-IE-WB-010, FIBER 122 (EAST)
7		DCF-IE-WB-010, FIBER 123 (EAST)
8		DCF-IE-WB-010, FIBER 124 (EAST)
9		
10		
11		
12		

LATERAL CABLE FIBER ASSIGNMENTS		VAULT ID: CMV-IE-WB-34A
LCF-IE-WB-009F		SITE ID: IE34
FIBER NO	FUNCTION	CONNECTION
1	NETWORK SWITCH SFP PORT 1	DCF-IE-WB-009, FIBER 17 (WEST)
2	NETWORK SWITCH SFP PORT 1	DCF-IE-WB-009, FIBER 18 (WEST)
3		DCF-IE-WB-009, FIBER 19 (WEST)
4		DCF-IE-WB-009, FIBER 20 (WEST)
5	NETWORK SWITCH SFP PORT 2	DCF-IE-WB-009, FIBER 17 (EAST)
6	NETWORK SWITCH SFP PORT 2	DCF-IE-WB-009, FIBER 18 (EAST)
7		DCF-IE-WB-009, FIBER 19 (EAST)
8		DCF-IE-WB-009, FIBER 20 (EAST)
9		
10		
11		
12		

LATERAL CABLE FIBER ASSIGNMENTS		VAULT ID: CMV-IE-WB-35B
LCF-IE-WB-010A		SITE ID: IE35
FIBER NO	FUNCTION	CONNECTION
1	NETWORK SWITCH SFP PORT 1	DCF-IE-WB-010, FIBER 13 (WEST)
2	NETWORK SWITCH SFP PORT 1	DCF-IE-WB-010, FIBER 14 (WEST)
3		DCF-IE-WB-010, FIBER 15 (WEST)
4		DCF-IE-WB-010, FIBER 16 (WEST)
5	NETWORK SWITCH SFP PORT 2	DCF-IE-WB-010, FIBER 13 (EAST)
6	NETWORK SWITCH SFP PORT 2	DCF-IE-WB-010, FIBER 14 (EAST)
7		DCF-IE-WB-010, FIBER 15 (EAST)
8		DCF-IE-WB-010, FIBER 16 (EAST)
9		
10		
11		
12		

LATERAL CABLE FIBER ASSIGNMENTS		VAULT ID: CMV-IE-WB-33A
LCF-IE-WB-009E		SITE ID: IE33
FIBER NO	FUNCTION	CONNECTION
1	NETWORK SWITCH SFP PORT 1	DCF-IE-WB-009, FIBER 21 (WEST)
2	NETWORK SWITCH SFP PORT 1	DCF-IE-WB-009, FIBER 22 (WEST)
3		DCF-IE-WB-009, FIBER 23 (WEST)
4		DCF-IE-WB-009, FIBER 24 (WEST)
5	NETWORK SWITCH SFP PORT 2	DCF-IE-WB-009, FIBER 21 (EAST)
6	NETWORK SWITCH SFP PORT 2	DCF-IE-WB-009, FIBER 22 (EAST)
7		DCF-IE-WB-009, FIBER 23 (EAST)
8		DCF-IE-WB-009, FIBER 24 (EAST)
9		
10		
11		
12		

LATERAL CABLE FIBER ASSIGNMENTS		VAULT ID: CMV-IE-WB-32E
LCF-IE-WB-009D		SITE ID: IE32B
FIBER NO	FUNCTION	CONNECTION
1	NETWORK SWITCH SFP PORT 1	DCF-IE-WB-009, FIBER 25 (WEST)
2	NETWORK SWITCH SFP PORT 1	DCF-IE-WB-009, FIBER 26 (WEST)
3		DCF-IE-WB-009, FIBER 27 (WEST)
4		DCF-IE-WB-009, FIBER 28 (WEST)
5	NETWORK SWITCH SFP PORT 2	DCF-IE-WB-009, FIBER 25 (WEST)
6	NETWORK SWITCH SFP PORT 2	DCF-IE-WB-009, FIBER 26 (WEST)
7		DCF-IE-WB-009, FIBER 27 (WEST)
8		DCF-IE-WB-009, FIBER 28 (WEST)
9		
10		
11		
12		

LATERAL CABLE FIBER ASSIGNMENTS		VAULT ID: CMV-IE-WB-32A
LCF-IE-WB-009B		SITE ID: DMS-47
FIBER NO	FUNCTION	CONNECTION
1	NETWORK SWITCH SFP PORT 1	DCF-IE-WB-009, FIBER 101 (WEST)
2	NETWORK SWITCH SFP PORT 1	DCF-IE-WB-009, FIBER 102 (WEST)
3		DCF-IE-WB-009, FIBER 103 (WEST)
4		DCF-IE-WB-009, FIBER 104 (WEST)
5	NETWORK SWITCH SFP PORT 2	DCF-IE-WB-009, FIBER 101 (WEST)
6	NETWORK SWITCH SFP PORT 2	DCF-IE-WB-009, FIBER 102 (WEST)
7		DCF-IE-WB-009, FIBER 103 (WEST)
8		DCF-IE-WB-009, FIBER 104 (WEST)
9		
10		
11		
12		

LATERAL CABLE FIBER ASSIGNMENTS		VAULT ID: CMV-IE-WB-32C
LCF-IE-WB-009C		SITE ID: IE32A
FIBER NO	FUNCTION	CONNECTION
1	NETWORK SWITCH SFP PORT 1	DCF-IE-WB-009, FIBER 29 (WEST)
2	NETWORK SWITCH SFP PORT 1	DCF-IE-WB-009, FIBER 30 (WEST)
3		DCF-IE-WB-009, FIBER 31 (WEST)
4		DCF-IE-WB-009, FIBER 32 (WEST)
5	NETWORK SWITCH SFP PORT 2	DCF-IE-WB-009, FIBER 29 (WEST)
6	NETWORK SWITCH SFP PORT 2	DCF-IE-WB-009, FIBER 30 (WEST)
7		DCF-IE-WB-009, FIBER 31 (WEST)
8		DCF-IE-WB-009, FIBER 32 (WEST)
9		
10		
11		
12		

LATERAL CABLE FIBER ASSIGNMENTS		VAULT ID: CMV-IE-WB-32A
LCF-IE-WB-009A		SITE ID: IE32
FIBER NO	FUNCTION	CONNECTION
1	NETWORK SWITCH SFP PORT 1	DCF-IE-WB-009, FIBER 33 (WEST)
2	NETWORK SWITCH SFP PORT 1	DCF-IE-WB-009, FIBER 34 (WEST)
3		DCF-IE-WB-009, FIBER 35 (WEST)
4		DCF-IE-WB-009, FIBER 36 (WEST)
5	NETWORK SWITCH SFP PORT 2	DCF-IE-WB-009, FIBER 33 (WEST)
6	NETWORK SWITCH SFP PORT 2	DCF-IE-WB-009, FIBER 34 (WEST)
7		DCF-IE-WB-009, FIBER 35 (WEST)
8		DCF-IE-WB-009, FIBER 36 (WEST)
9		
10		
11		
12		

LATERAL CABLE FIBER ASSIGNMENTS		VAULT ID: CMV-IE-WB-29B
LCF-IE-WB-007I		SITE ID: IE29B
FIBER NO	FUNCTION	CONNECTION
1	NETWORK SWITCH SFP PORT 1	DCF-IE-WB-007, FIBER 57 (EAST)
2	NETWORK SWITCH SFP PORT 1	DCF-IE-WB-007, FIBER 58 (EAST)
3		DCF-IE-WB-007, FIBER 59 (EAST)
4		DCF-IE-WB-007, FIBER 60 (EAST)
5	NETWORK SWITCH SFP PORT 2	DCF-IE-WB-007, FIBER 57 (WEST)
6	NETWORK SWITCH SFP PORT 2	DCF-IE-WB-007, FIBER 58 (WEST)
7		DCF-IE-WB-007, FIBER 59 (WEST)
8		DCF-IE-WB-007, FIBER 60 (WEST)
9		
10		
11		
12		

LATERAL CABLE FIBER ASSIGNMENTS		VAULT ID: CMV-IE-WB-28E
LCF-IE-WB-007G		SITE ID: TS (BRIGGS)
FIBER NO	FUNCTION	CONNECTION
1		DCF-IE-WB-007, FIBER 113 (EAST)
2		DCF-IE-WB-007, FIBER 114 (EAST)
3		DCF-IE-WB-007, FIBER 115 (EAST)
4		DCF-IE-WB-007, FIBER 116 (EAST)
5		DCF-IE-WB-007, FIBER 113 (WEST)
6		DCF-IE-WB-007, FIBER 114 (WEST)
7		DCF-IE-WB-007, FIBER 115 (WEST)
8		DCF-IE-WB-007, FIBER 116 (WEST)
9		
10		
11		
12		

LATERAL CABLE FIBER ASSIGNMENTS		VAULT ID: CMV-IE-WB-29A
LCF-IE-WB-007H		SITE ID: IE29A
FIBER NO	FUNCTION	CONNECTION
1	NETWORK SWITCH SFP PORT 1	DCF-IE-WB-007, FIBER 61 (EAST)
2	NETWORK SWITCH SFP PORT 1	DCF-IE-WB-007, FIBER 62 (EAST)
3		DCF-IE-WB-007, FIBER 63 (EAST)
4		DCF-IE-WB-007, FIBER 64 (EAST)
5	NETWORK SWITCH SFP PORT 2	DCF-IE-WB-007, FIBER 61 (WEST)
6	NETWORK SWITCH SFP PORT 2	DCF-IE-WB-007, FIBER 62 (WEST)
7		DCF-IE-WB-007, FIBER 63 (WEST)
8		DCF-IE-WB-007, FIBER 64 (WEST)
9		
10		
11		
12		

LATERAL CABLE FIBER ASSIGNMENTS		VAULT ID: CMV-IE-WB-28E
LCF-IE-WB-007F		SITE ID: LC (BRIGGS)
FIBER NO	FUNCTION	CONNECTION
1		DCF-IE-WB-007, FIBER 133 (EAST)
2		DCF-IE-WB-007, FIBER 134 (EAST)
3		DCF-IE-WB-007, FIBER 135 (EAST)
4		DCF-IE-WB-007, FIBER 136 (EAST)
5		DCF-IE-WB-007, FIBER 133 (WEST)
6		DCF-IE-WB-007, FIBER 134 (WEST)
7		DCF-IE-WB-007, FIBER 135 (WEST)
8		DCF-IE-WB-007, FIBER 136 (WEST)
9		
10		
11		
12		

LATERAL CABLE FIBER ASSIGNMENTS		VAULT ID: CMV-IE-WB-28C
LCF-IE-WB-007E		SITE ID: IE28A
FIBER NO	FUNCTION	CONNECTION
1	NETWORK SWITCH SFP PORT 1	DCF-IE-WB-007, FIBER 65 (EAST)
2	NETWORK SWITCH SFP PORT 1	DCF-IE-WB-007, FIBER 66 (EAST)
3		DCF-IE-WB-007, FIBER 67 (EAST)
4		DCF-IE-WB-007, FIBER 68 (EAST)
5	NETWORK SWITCH SFP PORT 2	DCF-IE-WB-007, FIBER 65 (WEST)
6	NETWORK SWITCH SFP PORT 2	DCF-IE-WB-007, FIBER 66 (WEST)
7		DCF-IE-WB-007, FIBER 67 (WEST)
8		DCF-IE-WB-007, FIBER 68 (WEST)
9		
10		
11		
12		

LATERAL CABLE FIBER ASSIGNMENTS		VAULT ID: CMV-IE-WB-27A
LCF-IE-WB-007C		SITE ID: LC (CHERRY HILL)
FIBER NO	FUNCTION	CONNECTION
1		DCF-IE-WB-007, FIBER 137 (EAST)
2		DCF-IE-WB-007, FIBER 138 (EAST)
3		DCF-IE-WB-007, FIBER 139 (EAST)
4		DCF-IE-WB-007, FIBER 140 (EAST)
5		DCF-IE-WB-007, FIBER 137 (WEST)
6		DCF-IE-WB-007, FIBER 138 (WEST)
7		DCF-IE-WB-007, FIBER 139 (WEST)
8		DCF-IE-WB-007, FIBER 140 (WEST)
9		
10		
11		
12		

LATERAL CABLE FIBER ASSIGNMENTS		VAULT ID: CMV-IE-WB-28C
LCF-IE-WB-007D		SITE ID: IE28
FIBER NO	FUNCTION	CONNECTION
1	NETWORK SWITCH SFP PORT 1	DCF-IE-WB-007, FIBER 69 (EAST)
2	NETWORK SWITCH SFP PORT 1	DCF-IE-WB-007, FIBER 70 (EAST)
3		DCF-IE-WB-007, FIBER 71 (EAST)
4		DCF-IE-WB-007, FIBER 72 (EAST)
5	NETWORK SWITCH SFP PORT 2	DCF-IE-WB-007, FIBER 69 (WEST)
6	NETWORK SWITCH SFP PORT 2	DCF-IE-WB-007, FIBER 70 (WEST)
7		DCF-IE-WB-007, FIBER 71 (WEST)
8		DCF-IE-WB-007, FIBER 72 (WEST)
9		
10		
11		
12		

LATERAL CABLE FIBER ASSIGNMENTS		VAULT ID: CMV-IE-WB-27A
LCF-IE-WB-007B		SITE ID: DMS-47
FIBER NO	FUNCTION	CONNECTION
1	NETWORK SWITCH SFP PORT 1	DCF-IE-WB-007, FIBER 105 (EAST)
2	NETWORK SWITCH SFP PORT 1	DCF-IE-WB-007, FIBER 106 (EAST)
3		DCF-IE-WB-007, FIBER 107 (EAST)
4		DCF-IE-WB-007, FIBER 108 (EAST)
5	NETWORK SWITCH SFP PORT 2	DCF-IE-WB-007, FIBER 105 (WEST)
6	NETWORK SWITCH SFP PORT 2	DCF-IE-WB-007, FIBER 106 (WEST)
7		DCF-IE-WB-007, FIBER 107 (WEST)
8		DCF-IE-WB-007, FIBER 108 (WEST)
9		
10		
11		
12		

MODEL: 2D SHEET H
FILE NAME: C:\TRANSYSTEMS\PW_LOCAL\TRANSYSTEMS-PW-01\DMS32656\62R19-SHT-ITS-FIBER-45.DGN

ATLAS
ATLAS TECHNICAL CONSULTANTS, LLC
100 S. WACKER DRIVE, SUITE 400
CHICAGO, IL 60606

USER NAME = SALASL	DESIGNED - JAM	REVISED -	
	DRAWN - JAM	REVISED -	
PLOT SCALE = 0.16666667 ' / IN.	CHECKED - DJM	REVISED -	
PLOT DATE = 11/12/2025	DATE - 11/12/2025	REVISED -	

STATE OF ILLINOIS
DEPARTMENT OF TRANSPORTATION

I-80
LATERAL FIBER ASSIGNMENTS

SCALE: NONE | SHEET OF SHEETS | STA. TO STA.

F.A.I. RTE.	SECTION	COUNTY	TOTAL SHEETS	SHEET NO.
80	FAI 80 21 VLS	VARIOUS	467	452
		CONTRACT NO. 62R19		
	ILLINOIS	FED. AID PROJECT		

LATERAL CABLE FIBER ASSIGNMENTS		VAULT ID: CMV-IE-WB-27A
LCF-IE-WB-007A		SITE ID: IE27
FIBER NO	FUNCTION	CONNECTION
1	NETWORK SWITCH SFP PORT 1	DCF-IE-WB-007, FIBER 73 (EAST)
2	NETWORK SWITCH SFP PORT 1	DCF-IE-WB-007, FIBER 74 (EAST)
3		DCF-IE-WB-007, FIBER 75 (EAST)
4		DCF-IE-WB-007, FIBER 76 (EAST)
5	NETWORK SWITCH SFP PORT 2	DCF-IE-WB-007, FIBER 73 (WEST)
6	NETWORK SWITCH SFP PORT 2	DCF-IE-WB-007, FIBER 74 (WEST)
7		DCF-IE-WB-007, FIBER 75 (WEST)
8		DCF-IE-WB-007, FIBER 76 (WEST)
9		
10		
11		
12		

LATERAL CABLE FIBER ASSIGNMENTS		VAULT ID: CMV-IE-25G
LCF-IE-WB-006D		SITE ID: CAB 59/IE25B (E)
FIBER NO	FUNCTION	CONNECTION
1	NETWORK SWITCH SFP PORT 1	DCF-IE-006, FIBER 81 (EAST)
2	NETWORK SWITCH SFP PORT 1	DCF-IE-006, FIBER 82 (EAST)
3		DCF-IE-006, FIBER 83 (EAST)
4		DCF-IE-006, FIBER 84 (EAST)
5	NETWORK SWITCH SFP PORT 2	DCF-IE-006, FIBER 81 (WEST)
6	NETWORK SWITCH SFP PORT 2	DCF-IE-006, FIBER 82 (WEST)
7		DCF-IE-006, FIBER 83 (WEST)
8		DCF-IE-006, FIBER 84 (WEST)
9		
10		
11		
12		

LATERAL CABLE FIBER ASSIGNMENTS		VAULT ID: CMV-IE-WB-26C
LCF-IE-WB-006E		SITE ID: CAB 61(E)
FIBER NO	FUNCTION	CONNECTION
1	NETWORK SWITCH SFP PORT 1	DCF-IE-006, FIBER 77 (EAST)
2	NETWORK SWITCH SFP PORT 1	DCF-IE-006, FIBER 78 (EAST)
3		DCF-IE-006, FIBER 79 (EAST)
4		DCF-IE-006, FIBER 80 (EAST)
5	NETWORK SWITCH SFP PORT 2	DCF-IE-006, FIBER 77 (WEST)
6	NETWORK SWITCH SFP PORT 2	DCF-IE-006, FIBER 78 (WEST)
7		DCF-IE-006, FIBER 79 (WEST)
8		DCF-IE-006, FIBER 80 (WEST)
9		
10		
11		
12		

LATERAL CABLE FIBER ASSIGNMENTS		VAULT ID: CMV-IE-25D
LCF-IE-006A		SITE ID: CAB 57/IE25 (E)
FIBER NO	FUNCTION	CONNECTION
1	NETWORK SWITCH SFP PORT 1	DCF-IE-006, FIBER 93 (EAST)
2	NETWORK SWITCH SFP PORT 1	DCF-IE-006, FIBER 94 (EAST)
3		DCF-IE-006, FIBER 95 (EAST)
4		DCF-IE-006, FIBER 96 (EAST)
5	NETWORK SWITCH SFP PORT 2	DCF-IE-006, FIBER 93 (WEST)
6	NETWORK SWITCH SFP PORT 2	DCF-IE-006, FIBER 94 (WEST)
7		DCF-IE-006, FIBER 95 (WEST)
8		DCF-IE-006, FIBER 96 (WEST)
9		
10		
11		
12		

LATERAL CABLE FIBER ASSIGNMENTS		VAULT ID: CMV-IE-24E
LCF-IE-005H		SITE ID: IE24 (E)
FIBER NO	FUNCTION	CONNECTION
1	NETWORK SWITCH SFP PORT 1	DCF-IE-005, FIBER 217 (EAST)
2	NETWORK SWITCH SFP PORT 1	DCF-IE-005, FIBER 218 (EAST)
3		DCF-IE-005, FIBER 219 (EAST)
4		DCF-IE-005, FIBER 220 (EAST)
5	NETWORK SWITCH SFP PORT 2	DCF-IE-005, FIBER 217 (WEST)
6	NETWORK SWITCH SFP PORT 2	DCF-IE-005, FIBER 218 (WEST)
7		DCF-IE-005, FIBER 219 (WEST)
8		DCF-IE-005, FIBER 220 (WEST)
9		
10		
11		
12		

LATERAL CABLE FIBER ASSIGNMENTS		VAULT ID: CMV-IE-24B
LCF-IE-005F		SITE ID: CAB 53 (E)
FIBER NO	FUNCTION	CONNECTION
1	NETWORK SWITCH SFP PORT 1	DCF-IE-005, FIBER 225 (EAST)
2	NETWORK SWITCH SFP PORT 1	DCF-IE-005, FIBER 226 (EAST)
3		DCF-IE-005, FIBER 227 (EAST)
4		DCF-IE-005, FIBER 228 (EAST)
5	NETWORK SWITCH SFP PORT 2	DCF-IE-005, FIBER 225 (WEST)
6	NETWORK SWITCH SFP PORT 2	DCF-IE-005, FIBER 226 (WEST)
7		DCF-IE-005, FIBER 227 (WEST)
8		DCF-IE-005, FIBER 228 (WEST)
9		
10		
11		
12		

LATERAL CABLE FIBER ASSIGNMENTS		VAULT ID: CMV-IE-24E
LCF-IE-005G		SITE ID: CAB 55 (E)
FIBER NO	FUNCTION	CONNECTION
1	NETWORK SWITCH SFP PORT 1	DCF-IE-005, FIBER 221 (EAST)
2	NETWORK SWITCH SFP PORT 1	DCF-IE-005, FIBER 222 (EAST)
3		DCF-IE-005, FIBER 223 (EAST)
4		DCF-IE-005, FIBER 224 (EAST)
5	NETWORK SWITCH SFP PORT 2	DCF-IE-005, FIBER 221 (WEST)
6	NETWORK SWITCH SFP PORT 2	DCF-IE-005, FIBER 222 (WEST)
7		DCF-IE-005, FIBER 223 (WEST)
8		DCF-IE-005, FIBER 224 (WEST)
9		
10		
11		
12		

LATERAL CABLE FIBER ASSIGNMENTS		VAULT ID: CMV-IE-23N
LCF-IE-005E		SITE ID: CAB 51 (E)
FIBER NO	FUNCTION	CONNECTION
1	NETWORK SWITCH SFP PORT 1	DCF-IE-005, FIBER 229 (EAST)
2	NETWORK SWITCH SFP PORT 1	DCF-IE-005, FIBER 230 (EAST)
3		DCF-IE-005, FIBER 231 (EAST)
4		DCF-IE-005, FIBER 232 (EAST)
5	NETWORK SWITCH SFP PORT 2	DCF-IE-005, FIBER 229 (WEST)
6	NETWORK SWITCH SFP PORT 2	DCF-IE-005, FIBER 230 (WEST)
7		DCF-IE-005, FIBER 231 (WEST)
8		DCF-IE-005, FIBER 232 (WEST)
9		
10		
11		
12		

LATERAL CABLE FIBER ASSIGNMENTS		VAULT ID: CMV-IE-23M
LCF-IE-005D		SITE ID: IE23A (E)
FIBER NO	FUNCTION	CONNECTION
1	NETWORK SWITCH SFP PORT 1	DCF-IE-005, FIBER 233 (EAST)
2	NETWORK SWITCH SFP PORT 1	DCF-IE-005, FIBER 234 (EAST)
3		DCF-IE-005, FIBER 235 (EAST)
4		DCF-IE-005, FIBER 236 (EAST)
5	NETWORK SWITCH SFP PORT 2	DCF-IE-005, FIBER 233 (WEST)
6	NETWORK SWITCH SFP PORT 2	DCF-IE-005, FIBER 234 (WEST)
7		DCF-IE-005, FIBER 235 (WEST)
8		DCF-IE-005, FIBER 236 (WEST)
9		
10		
11		
12		

LATERAL CABLE FIBER ASSIGNMENTS		VAULT ID: CMV-IE-23G
LCF-IE-005B		SITE ID: CAB 47 (E)
FIBER NO	FUNCTION	CONNECTION
1	NETWORK SWITCH SFP PORT 1	DCF-IE-005, FIBER 241 (EAST)
2	NETWORK SWITCH SFP PORT 1	DCF-IE-005, FIBER 242 (EAST)
3		DCF-IE-005, FIBER 243 (EAST)
4		DCF-IE-005, FIBER 244 (EAST)
5	NETWORK SWITCH SFP PORT 2	DCF-IE-005, FIBER 241 (WEST)
6	NETWORK SWITCH SFP PORT 2	DCF-IE-005, FIBER 242 (WEST)
7		DCF-IE-005, FIBER 243 (WEST)
8		DCF-IE-005, FIBER 244 (WEST)
9		
10		
11		
12		

LATERAL CABLE FIBER ASSIGNMENTS		VAULT ID: CMV-IE-23J
LCF-IE-005C		SITE ID: CAB 49 (E)
FIBER NO	FUNCTION	CONNECTION
1	NETWORK SWITCH SFP PORT 1	DCF-IE-005, FIBER 237 (EAST)
2	NETWORK SWITCH SFP PORT 1	DCF-IE-005, FIBER 238 (EAST)
3		DCF-IE-005, FIBER 239 (EAST)
4		DCF-IE-005, FIBER 240 (EAST)
5	NETWORK SWITCH SFP PORT 2	DCF-IE-005, FIBER 237 (WEST)
6	NETWORK SWITCH SFP PORT 2	DCF-IE-005, FIBER 238 (WEST)
7		DCF-IE-005, FIBER 239 (WEST)
8		DCF-IE-005, FIBER 240 (WEST)
9		
10		
11		
12		

LATERAL CABLE FIBER ASSIGNMENTS		VAULT ID: CMV-IE-23D
LCF-IE-005A		SITE ID: IE23 (E)
FIBER NO	FUNCTION	CONNECTION
1	NETWORK SWITCH SFP PORT 1	DCF-IE-005, FIBER 245 (EAST)
2	NETWORK SWITCH SFP PORT 1	DCF-IE-005, FIBER 246 (EAST)
3		DCF-IE-005, FIBER 247 (EAST)
4		DCF-IE-005, FIBER 248 (EAST)
5	NETWORK SWITCH SFP PORT 2	DCF-IE-005, FIBER 245 (WEST)
6	NETWORK SWITCH SFP PORT 2	DCF-IE-005, FIBER 246 (WEST)
7		DCF-IE-005, FIBER 247 (WEST)
8		DCF-IE-005, FIBER 248 (WEST)
9		
10		
11		
12		

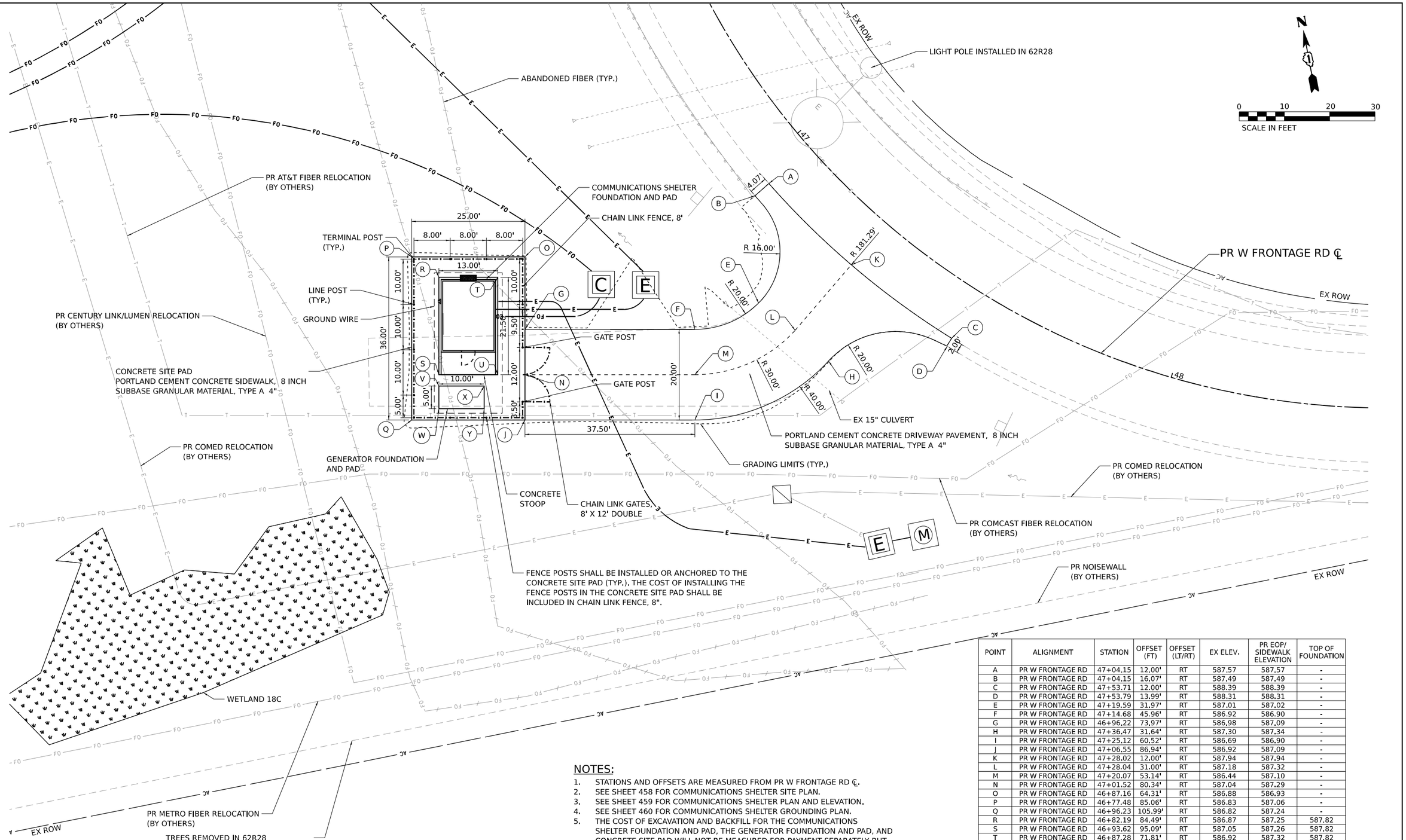

POINT	ALIGNMENT	STATION	OFFSET (FT)	OFFSET (LT/RT)	EX ELEV.	PR EOP/ SIDEWALK ELEVATION	TOP OF FOUNDATION
A	PR W FRONTAGE RD	47+04.15	12.00'	RT	587.57	587.57	-
B	PR W FRONTAGE RD	47+04.15	16.07'	RT	587.49	587.49	-
C	PR W FRONTAGE RD	47+53.71	12.00'	RT	588.39	588.39	-
D	PR W FRONTAGE RD	47+53.79	13.99'	RT	588.31	588.31	-
E	PR W FRONTAGE RD	47+19.59	31.97'	RT	587.01	587.02	-
F	PR W FRONTAGE RD	47+14.68	45.96'	RT	586.92	586.90	-
G	PR W FRONTAGE RD	46+96.22	73.97'	RT	586.98	587.09	-
H	PR W FRONTAGE RD	47+36.47	31.64'	RT	587.30	587.34	-
I	PR W FRONTAGE RD	47+25.12	60.52'	RT	586.69	586.90	-
J	PR W FRONTAGE RD	47+06.55	86.94'	RT	586.92	587.09	-
K	PR W FRONTAGE RD	47+28.02	12.00'	RT	587.94	587.94	-
L	PR W FRONTAGE RD	47+28.04	31.00'	RT	587.18	587.32	-
M	PR W FRONTAGE RD	47+20.07	53.14'	RT	586.44	587.10	-
N	PR W FRONTAGE RD	47+01.52	80.34'	RT	587.04	587.29	-
O	PR W FRONTAGE RD	46+87.16	64.31'	RT	586.88	586.93	-
P	PR W FRONTAGE RD	46+77.48	85.06'	RT	586.83	587.06	-
Q	PR W FRONTAGE RD	46+96.23	105.99'	RT	586.82	587.24	-
R	PR W FRONTAGE RD	46+82.19	84.49'	RT	586.87	587.25	587.82
S	PR W FRONTAGE RD	46+93.62	95.09'	RT	587.05	587.26	587.82
T	PR W FRONTAGE RD	46+87.28	71.81'	RT	586.92	587.32	587.82
U	PR W FRONTAGE RD	46+98.93	84.94'	RT	587.04	587.25	587.82
V	PR W FRONTAGE RD	46+94.88	96.63'	RT	587.00	587.24	587.97
W	PR W FRONTAGE RD	46+97.36	99.75'	RT	586.89	587.21	587.97
X	PR W FRONTAGE RD	46+98.94	88.84'	RT	587.00	587.47	587.97
Y	PR W FRONTAGE RD	47+01.44	92.05'	RT	586.93	587.28	587.97

NOTES:

1. STATIONS AND OFFSETS ARE MEASURED FROM PR W FRONTAGE RD ℄.
2. SEE SHEET 458 FOR COMMUNICATIONS SHELTER SITE PLAN.
3. SEE SHEET 459 FOR COMMUNICATIONS SHELTER PLAN AND ELEVATION.
4. SEE SHEET 460 FOR COMMUNICATIONS SHELTER GROUNDING PLAN.
5. THE COST OF EXCAVATION AND BACKFILL FOR THE COMMUNICATIONS SHELTER FOUNDATION AND PAD, THE GENERATOR FOUNDATION AND PAD, AND CONCRETE SITE PAD WILL NOT BE MEASURED FOR PAYMENT SEPARATELY BUT WILL BE INCLUDED IN THE LUMP BID PRICE FOR ILLINOIS DEPARTMENT OF TRANSPORTATION COMMUNICATIONS NODE.

MODEL: PR W FRONTAGE - COMM SHELTER [SHEET]
FILE NAME: C:\TRANSYSTEMS\PW_LOCAL\TRANSYSTEMS-PW-01\DMS31452\62R19-SHT-ITS-SITE-PLAN-01.DGN

exp.

USER NAME = SALASL	DESIGNED - CMA	REVISED -	
	DRAWN - CMA	REVISED -	
PLOT SCALE = 0.16666667 ' / IN.	CHECKED - TMH	REVISED -	
PLOT DATE = 11/12/2025	DATE - 11/12/2025	REVISED -	

STATE OF ILLINOIS
DEPARTMENT OF TRANSPORTATION

ITS COMMUNICATIONS HUT
CIVIL SITE PLAN

SCALE: 1"=10' | SHEET OF SHEETS | STA. TO STA.

F.A.I. RTE.	SECTION	COUNTY	TOTAL SHEETS	SHEET NO.
80	FAI 80 21 VLS	VARIOUS	467	456

CONTRACT NO. 62R19

ILLINOIS | FED. AID PROJECT

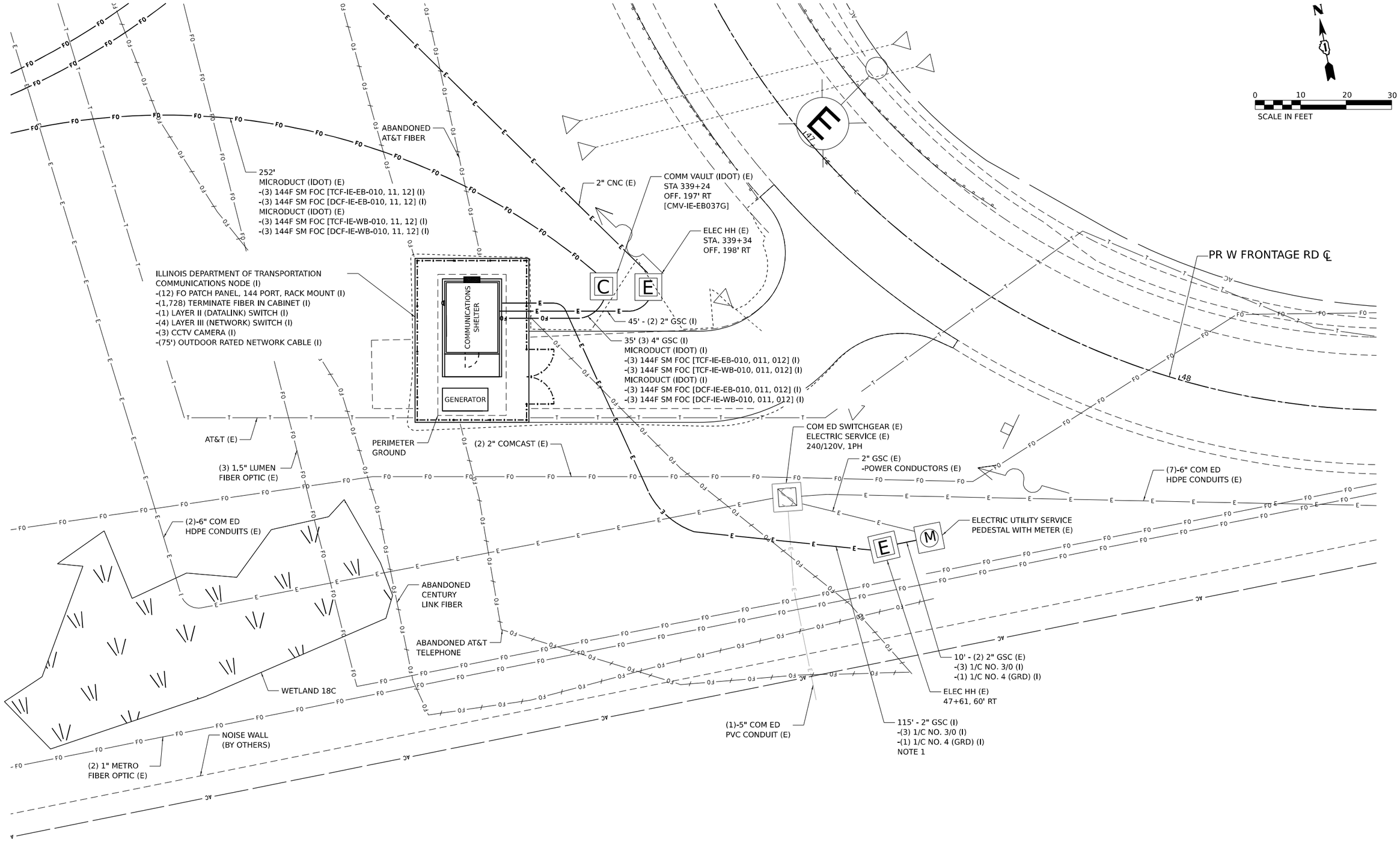

NOTES

1. CONNECT TO 2" GSC STUBBED OUT FROM ELECTRIC HANDHOLE (BY 62R28).

MODEL: 2D SHEET H
FILE NAME: C:\TRANSYSTEMS\PW_LOCAL\TRANSYSTEMS-PW-01\DMS32656\62R19-SHT-ITS-CH-01.DGN

ATLAS
ATLAS TECHNICAL CONSULTANTS, LLC
100 S. WACKER DRIVE, SUITE 400
CHICAGO, IL 60606

USER NAME = SALASL	DESIGNED - REL	REVISED -	
	DRAWN - AJW	REVISED -	
PLOT SCALE = 0.16666667 ' / IN.	CHECKED - DJM	REVISED -	
PLOT DATE = 11/12/2025	DATE - 11/12/2025	REVISED -	

STATE OF ILLINOIS
DEPARTMENT OF TRANSPORTATION

I-80
COMMUNICATION HUT DETAILS

SCALE: 1" = 10' | SHEET OF SHEETS | STA. TO STA.

F.A.I. RTE.	SECTION	COUNTY	TOTAL SHEETS	SHEET NO.
80	FAI 80 21 VLS	VARIOUS	467	457
		CONTRACT NO. 62R19		
	ILLINOIS	FED. AID PROJECT		

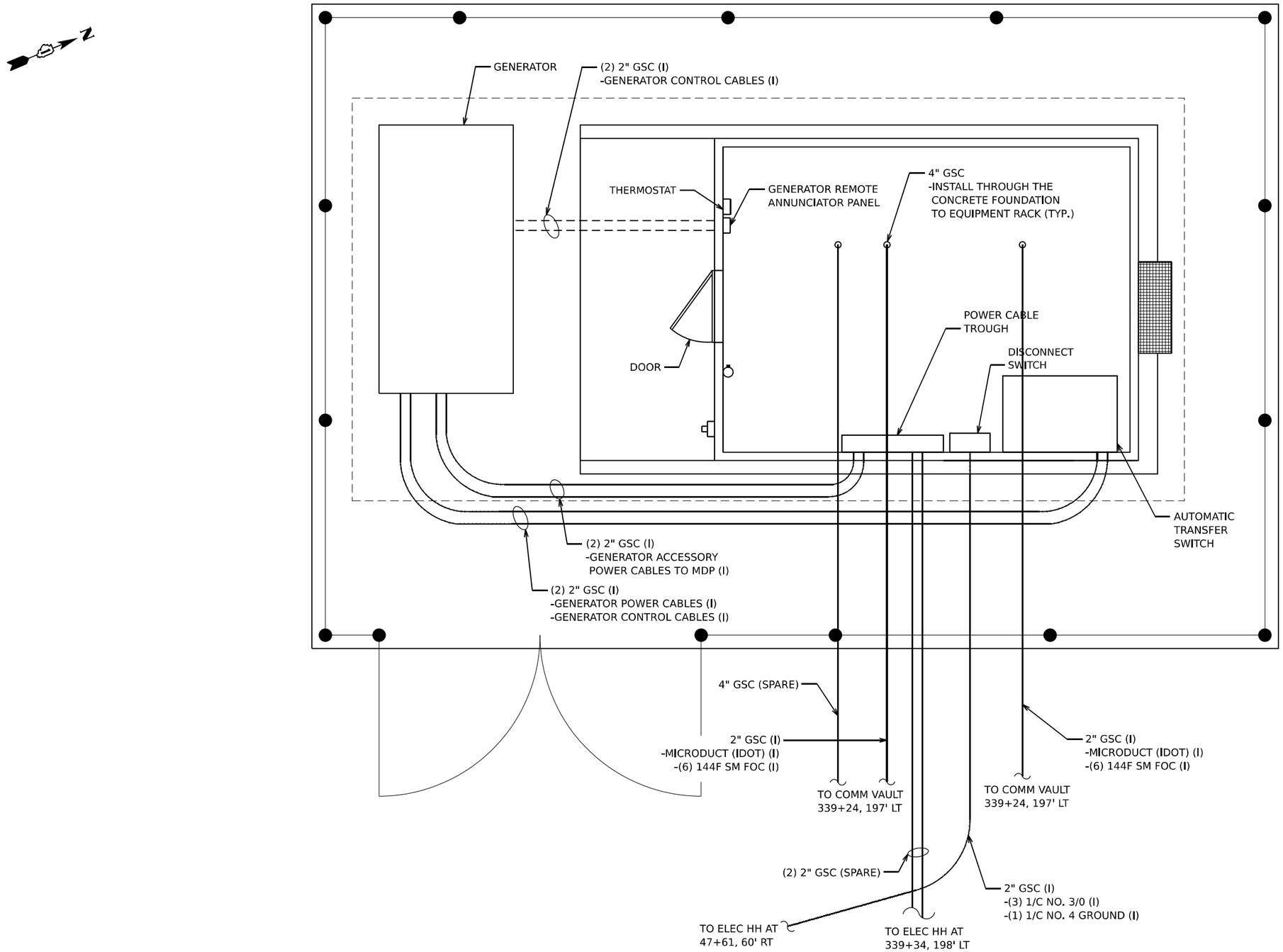

COMMUNICATIONS HUT CONDUIT/CABLE AND ACCESS POINTS

N.T.S.

MODEL: 2D SHEET H
FILE NAME: C:\TRANSYSTEMS\PW_LOCAL\TRANSYSTEMS-PW-01\DMS32656\62R19-SHT-ITS-CH-02.DGN

ATLAS TECHNICAL CONSULTANTS, LLC 100 S. WACKER DRIVE, SUITE 400 CHICAGO, IL 60606	USER NAME = SALASL	DESIGNED - REL	REVISED -	STATE OF ILLINOIS DEPARTMENT OF TRANSPORTATION	I-80 COMMUNICATION HUT DETAILS			F.A.I. RTE.	SECTION	COUNTY	TOTAL SHEETS	SHEET NO.
		DRAWN - AJW	REVISED -					80	FAI 80 21 VLS	VARIOUS	467	458
	PLOT SCALE = 0.16666667 ' / IN.	CHECKED - DJM	REVISED -							CONTRACT NO. 62R19		
	PLOT DATE = 11/12/2025	DATE - 11/12/2025	REVISED -		SCALE: N.T.S.	SHEET OF SHEETS	STA. TO STA.		ILLINOIS	FED. AID PROJECT		

NOTES
1. LIGHTNING PROTECTION SYSTEM SHOWN ON SHEET 460.
2. MAINTAIN A MINIMUM 36" CLEARANCE FROM FACE OF POWER EQUIPMENT TO FACE OF COMMUNICATIONS RACKS.
3. SEE LIGHTING FIXTURE SCHEDULE ON SHEET 464 FOR LUMINAIRE TYPES.
4. COORDINATE LOCATION OF ALL EQUIPMENT AND PANELS WITH THE CONCRETE PAD INSTALLATION SO THAT ALL CONDUIT SLEEVES ARE INSTALLED IN THE CORRECT LOCATIONS.
5. PROVIDE AND INSTALL NEW CCTV CAMERA, MOUNT AND WIRING. INSTALL CAMERA SO THAT IT WILL CLEAR THE TOP OF THE SHELTER BY 24" OR MORE.
6. SEE SHEET 461 FOR INTERIOR ELEVATION VIEWS OF WALL "D" AND EQUIPMENT RACKS.
7. MOUNT CAMERA AT HEIGHT OF 7' ON THE INTERIOR WALL.

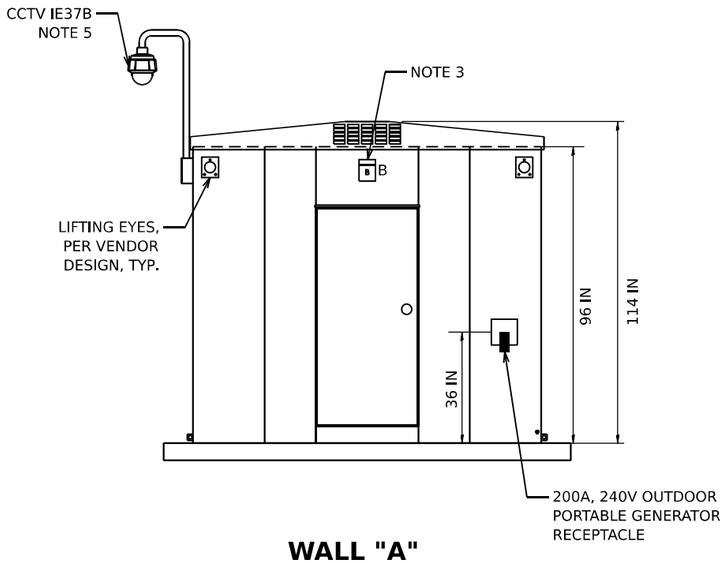

WALL "A"
N.T.S.

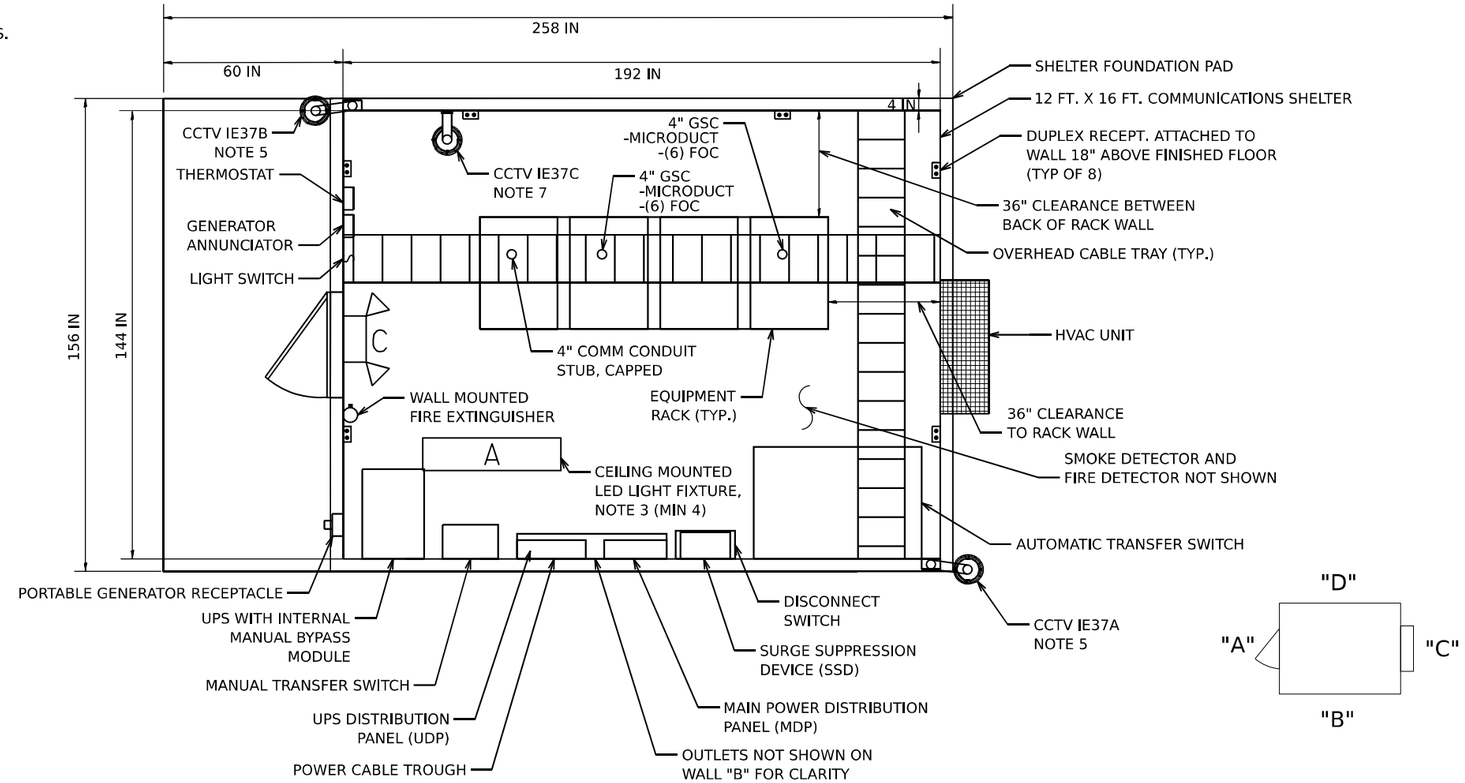

PLAN VIEW
N.T.S.

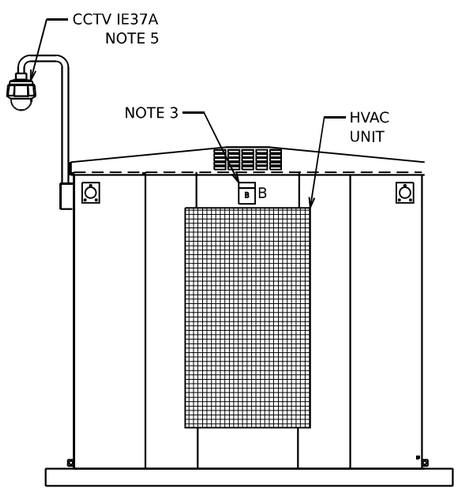

WALL "C"
N.T.S.

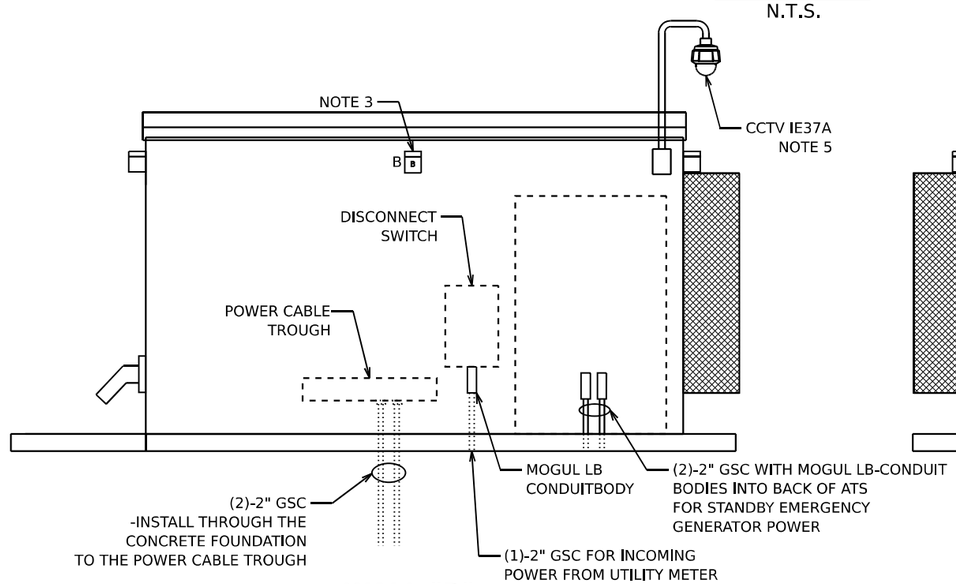

WALL "B"
N.T.S.

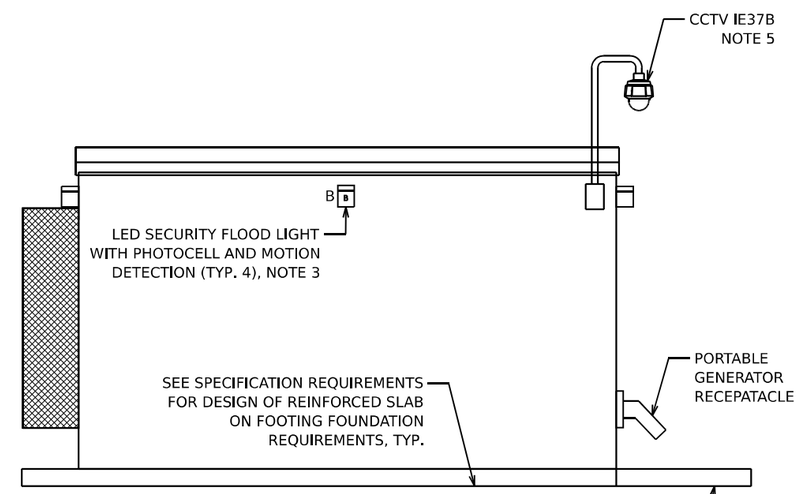

WALL "D"
N.T.S.

MODEL: 2D SHEET H
FILE NAME: C:\TRANSYSTEMS\PW_LOCAL\TRANSYSTEMS-PW-01\DMS32656\62R19-SHT-ITS-CH-03.DGN

ATLAS TECHNICAL CONSULTANTS, LLC 100 S. WACKER DRIVE, SUITE 400 CHICAGO, IL 60606	USER NAME = SALASL	DESIGNED - REL	REVISED -	STATE OF ILLINOIS DEPARTMENT OF TRANSPORTATION	I-80 COMMUNICATION HUT DETAILS
		DRAWN - AJW	REVISED -		
	PLOT SCALE = 0.16666667 ' / IN.	CHECKED - DJM	REVISED -		
	PLOT DATE = 11/12/2025	DATE - 11/12/2025	REVISED -		SCALE: N.T.S. SHEET OF SHEETS STA. TO STA.

F.A.I. RTE.	SECTION	COUNTY	TOTAL SHEETS	SHEET NO.
80	FAI 80 21 VLS	VARIOUS	467	459
		CONTRACT NO. 62R19		
	ILLINOIS	FED. AID PROJECT		

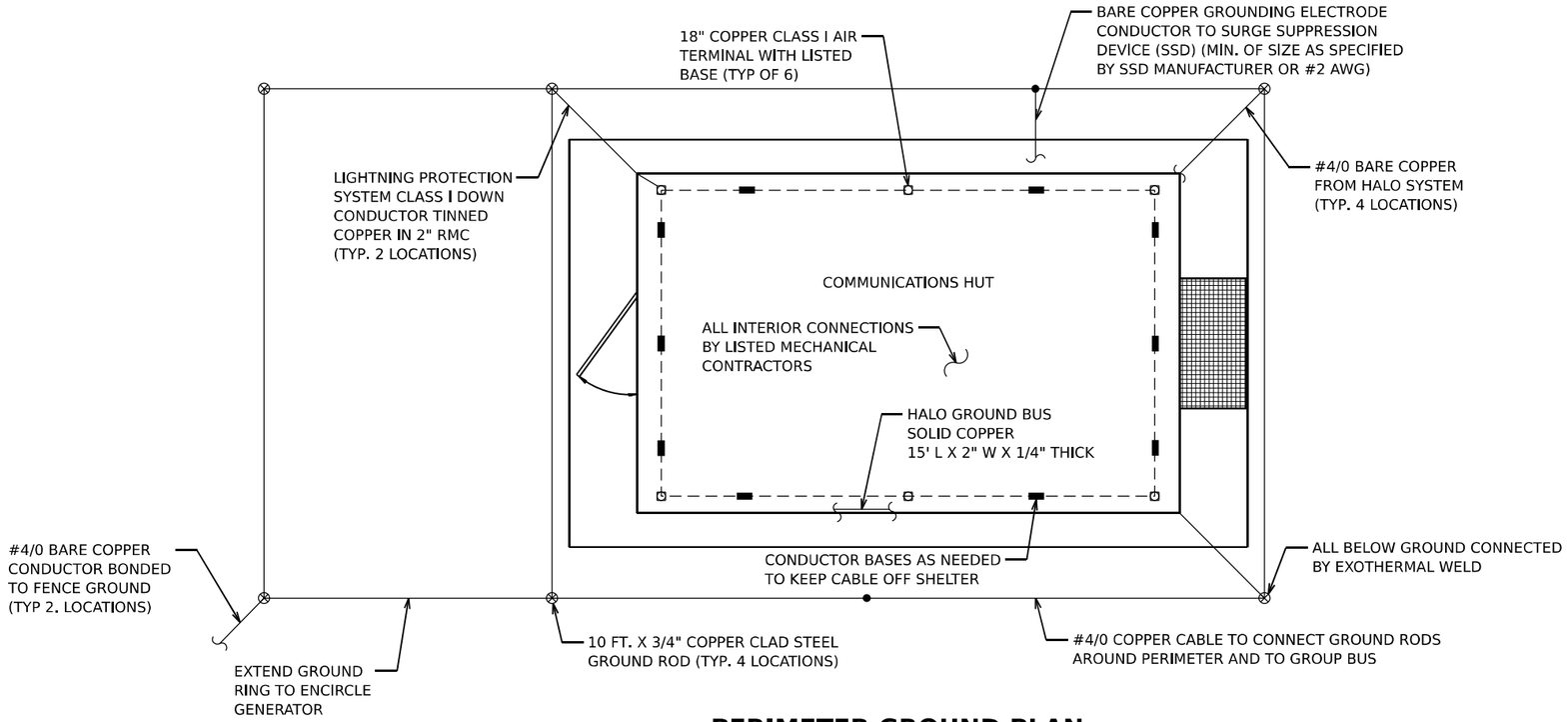

PERIMETER GROUND PLAN

N.T.S.

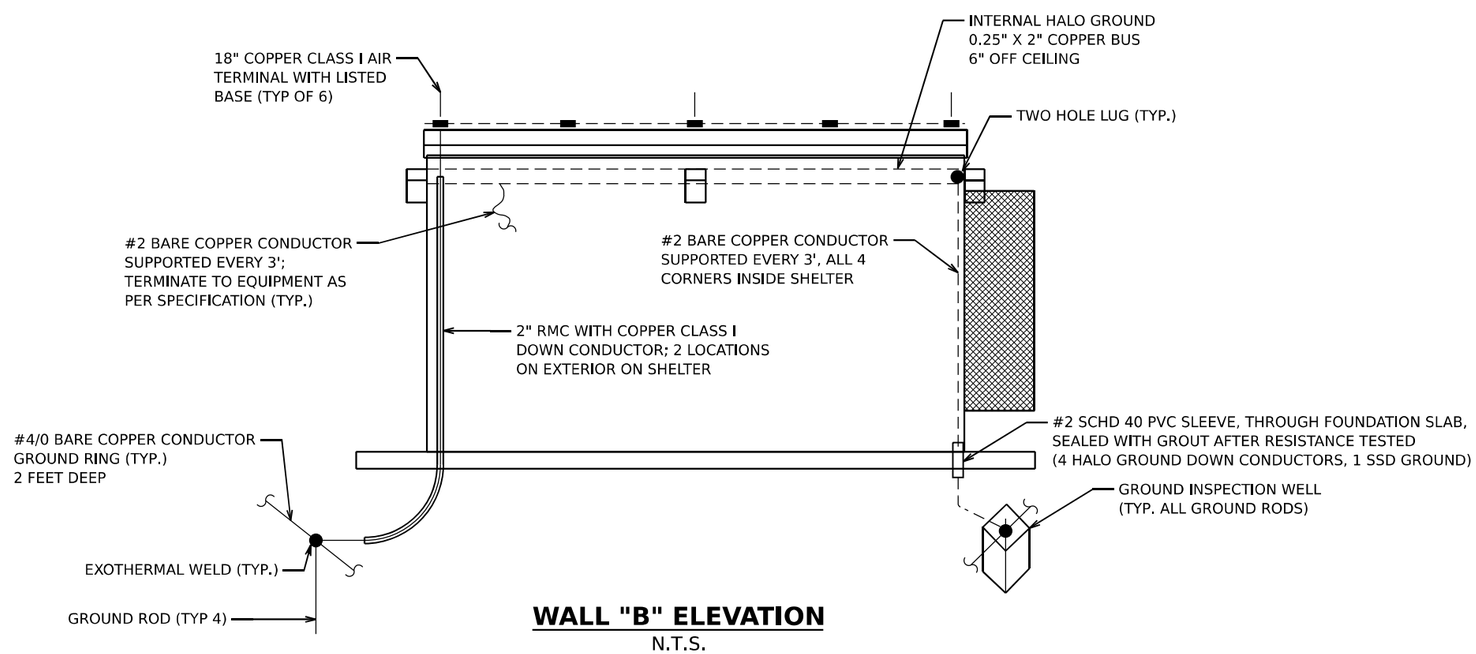

WALL "B" ELEVATION

N.T.S.

MODEL: 2D SHEET H
FILE NAME: C:\TRANSYSTEMS\PW_LOCAL\TRANSYSTEMS-PW-01\DMS32656\62R19-SHT-ITS-CH-04.DGN

ATLAS TECHNICAL CONSULTANTS, LLC 100 S. WACKER DRIVE, SUITE 400 CHICAGO, IL 60606	USER NAME = SALASL	DESIGNED - REL	REVISED -	STATE OF ILLINOIS DEPARTMENT OF TRANSPORTATION	COMMUNICATION HUT DETAILS
		DRAWN - AJW	REVISED -		
	PLOT SCALE = 0.16666667 ' / IN.	CHECKED - WDS	REVISED -		
	PLOT DATE = 11/12/2025	DATE - 11/12/2025	REVISED -		SCALE: SHEET OF SHEETS STA. TO STA.

F.A.I. RTE.	SECTION	COUNTY	TOTAL SHEETS	SHEET NO.
80	FAI 80 21 VLS	VARIOUS	467	460
		CONTRACT NO. 62R19		
	ILLINOIS	FED. AID PROJECT		

INTERIOR ELEVATION VIEW WALL "D" NOTES:

1. ALL DIMENSIONS: L X H X D
2. ALL DIMENSIONS APPROXIMATE AND DEPENDANT ON ACTUAL EQUIPMENT SELECTED. PRIOR TO COMMENCING SITE INSTALLATION CONTRACTOR MUST SUBMIT SKETCH SHOWING ELEVATION VIEWS OF SHELTER WALLS WITH ELECTRICAL EQUIPMENT. SKETCH TO SHOW ACTUAL DIMENSIONS OF EQUIPMENT SELECTED, CONDUIT ROUTES, AND CLEARANCES.

GENERAL EQUIPMENT RACK LAYOUT NOTES:

1. CONTRACTOR TO COORDINATE WITH IDOT EMC ENGINEER TO CONFIRM EQUIPMENT RACK LAYOUTS PRIOR TO INSTALLATION.
2. REFER TO FIBER ASSIGNMENTS TABLES DRAWINGS FOR FIBER ASSIGNMENTS.

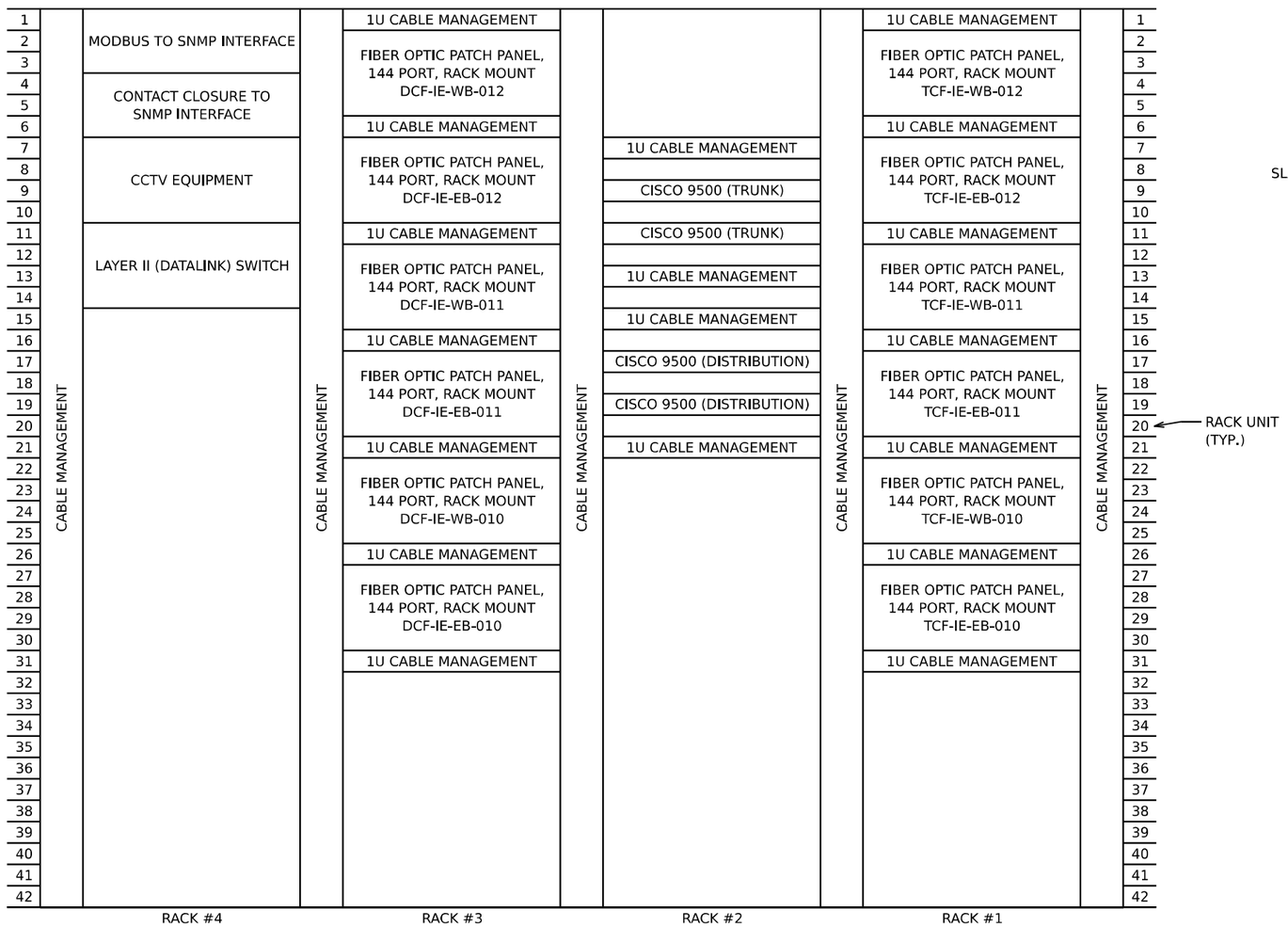

DETAIL A

N.T.S.

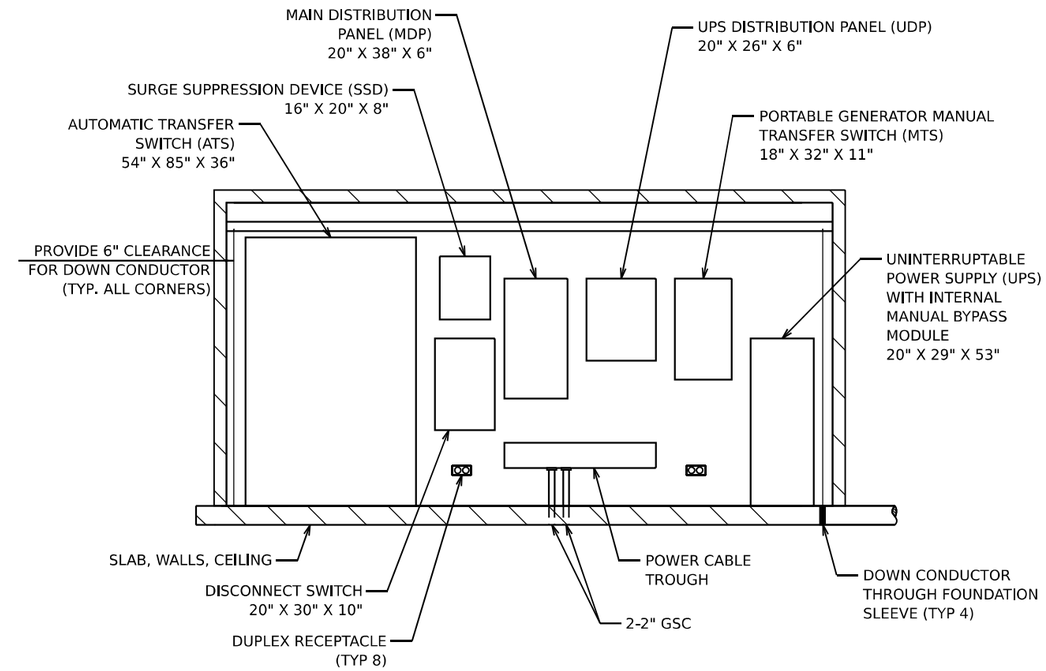

INTERIOR ELEVATION VIEW WALL "B"

N.T.S.

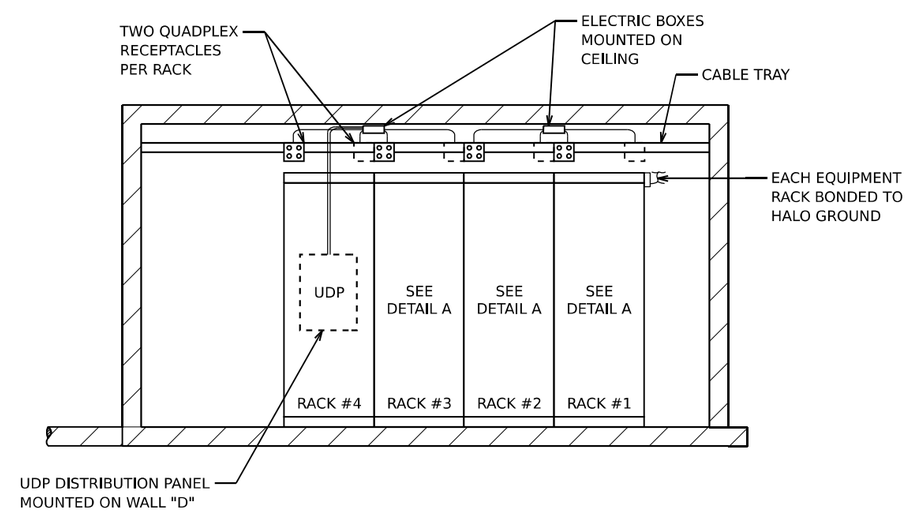

GENERAL EQUIPMENT RACK LAYOUT (LOOKING TOWARD WALL "D")

N.T.S.

MODEL: 2D SHEET H
FILE NAME: C:\TRANSYSTEMS\PW_LOCAL\TRANSYSTEMS-PW-01\DMS32656\62R19-SHT-ITS-CH-05.DGN

ATLAS TECHNICAL CONSULTANTS, LLC
100 S. WACKER DRIVE, SUITE 400
CHICAGO, IL 60606

USER NAME = SALASL	DESIGNED - REL	REVISED -	
	DRAWN - AJW	REVISED -	
PLOT SCALE = 0.16666667 ' / IN.	CHECKED - DJM	REVISED -	
PLOT DATE = 11/12/2025	DATE - 11/12/2025	REVISED -	

STATE OF ILLINOIS
DEPARTMENT OF TRANSPORTATION

I-80
COMMUNICATION HUT DETAILS

SCALE: N.T.S. | SHEET OF SHEETS | STA. TO STA.

F.A.I. RTE.	SECTION	COUNTY	TOTAL SHEETS	SHEET NO.
80	FAI 80 21 VLS	VARIOUS	467	461

CONTRACT NO. 62R19

ILLINOIS | FED. AID PROJECT

		FROM		TO		
DEVICE ID	CONNECTION	FDP PANEL	PORTS	SFP	SWITCH PORT	SWITCH ID
IE37D	PRIMARY	DCF-IE-EB-012	1 / 2	GLC-LH-SMD	.	.
IE39	PRIMARY	DCF-IE-EB-012	5 / 6	GLC-LH-SMD	.	.
IE39A	PRIMARY	DCF-IE-EB-012	9 / 10	GLC-LH-SMD	.	.
IE39B	PRIMARY	DCF-IE-EB-012	13 / 14	GLC-LH-SMD	.	.
IE40	PRIMARY	DCF-IE-EB-012	17 / 18	GLC-LH-SMD	.	.
IE40A	PRIMARY	DCF-IE-EB-012	21 / 22	GLC-LH-SMD	.	.
DMS-46	PRIMARY	DCF-IE-EB-012	25 / 26	GLC-LH-SMD	.	.
IE38	SECONDARY	DCF-IE-EB-012	29 / 30	GLC-LH-SMD	.	.
IE38A	SECONDARY	DCF-IE-EB-012	33 / 34	GLC-LH-SMD	.	.
IE38B	SECONDARY	DCF-IE-EB-012	37 / 38	GLC-LH-SMD	.	.

		FROM		TO		
DEVICE ID	CONNECTION	FDP PANEL	PORTS	SFP	SWITCH PORT	SWITCH ID
IE36	PRIMARY	DCF-IE-EB-010	1 / 2	GLC-LH-SMD	.	.
IE35A	PRIMARY	DCF-IE-EB-010	5 / 6	GLC-LH-SMD	.	.
IE34B	PRIMARY	DCF-IE-EB-010	9 / 10	GLC-LH-SMD	.	.
IE34A	PRIMARY	DCF-IE-EB-010	13 / 14	GLC-LH-SMD	.	.
IE33A	PRIMARY	DCF-IE-EB-010	17 / 18	GLC-LH-SMD	.	.
IE32D	PRIMARY	DCF-IE-EB-010	21 / 22	GLC-LH-SMD	.	.
IE32C	PRIMARY	DCF-IE-EB-010	25 / 26	GLC-LH-SMD	.	.
DMS-48	PRIMARY	DCF-IE-EB-010	109 / 110	GLC-LH-SMD	.	.
TS LARKIN	PRIMARY	DCF-IE-EB-010	117 / 118	GLC-LH-SMD	.	.

		FROM		TO		
DESIGNATION	CONNECTION	FDP PANEL	PORTS	SFP	SWITCH PORT	SWITCH ID
BOLINGBROOK WEIGH STATION	PRIMARY	TCF-IE-WB-011	13 / 14	GLC-ZX-SMD	.	.
BOLINGBROOK WEIGH STATION	SECONDARY	TCF-IE-WB-011	15 / 16	GLC-ZX-SMD	.	.

NOTES:

1. CONTRACTOR TO COORDINATE WITH IDOT FOR SWITCH PORT AND SWITCH ID ASSIGNMENTS.

		FROM		TO		
DEVICE ID	CONNECTION	FDP PANEL	PORTS	SFP	SWITCH PORT	SWITCH ID
IE38	PRIMARY	DCF-IE-WB-012	1 / 2	GLC-LH-SMD	.	.
IE38A	PRIMARY	DCF-IE-WB-012	5 / 6	GLC-LH-SMD	.	.
IE38B	PRIMARY	DCF-IE-WB-012	9 / 10	GLC-LH-SMD	.	.
IE37D	SECONDARY	DCF-IE-WB-012	13 / 14	GLC-LH-SMD	.	.
IE39	SECONDARY	DCF-IE-WB-012	17 / 18	GLC-LH-SMD	.	.
IE39A	SECONDARY	DCF-IE-WB-012	21 / 22	GLC-LH-SMD	.	.
IE39B	SECONDARY	DCF-IE-WB-012	25 / 26	GLC-LH-SMD	.	.
IE40	SECONDARY	DCF-IE-WB-012	29 / 30	GLC-LH-SMD	.	.
IE40A	SECONDARY	DCF-IE-WB-012	31 / 32	GLC-LH-SMD	.	.
DMS-46	SECONDARY	DCF-IE-WB-012	33 / 34	GLC-LH-SMD	.	.

		FROM		TO		
DEVICE ID	CONNECTION	FDP PANEL	PORTS	SFP	SWITCH PORT	SWITCH ID
IE37	PRIMARY	DCF-IE-WB-010	1 / 2	GLC-LH-SMD	.	.
IE36B	PRIMARY	DCF-IE-WB-010	5 / 6	GLC-LH-SMD	.	.
IE36A	PRIMARY	DCF-IE-WB-010	9 / 10	GLC-LH-SMD	.	.
IE35	PRIMARY	DCF-IE-WB-010	13 / 14	GLC-LH-SMD	.	.
IE34	PRIMARY	DCF-IE-WB-010	17 / 18	GLC-LH-SMD	.	.
IE33	PRIMARY	DCF-IE-WB-010	21 / 22	GLC-LH-SMD	.	.
IE32B	PRIMARY	DCF-IE-WB-010	25 / 26	GLC-LH-SMD	.	.
IE32A	PRIMARY	DCF-IE-WB-010	29 / 30	GLC-LH-SMD	.	.
IE32	PRIMARY	DCF-IE-WB-010	33 / 34	GLC-LH-SMD	.	.
DMS-47	PRIMARY	DCF-IE-WB-010	101 / 102	GLC-LH-SMD	.	.

		FROM		TO		
DEVICE ID	CONNECTION	FDP PANEL	PORTS	SFP	SWITCH PORT	SWITCH ID
LAYER II SWITCH	.	.	. / .	GLC-LH-SMD	.	.

FIBER OPTIC JUMPER SCHEDULE
PROPOSED COMMUNICATION HUT

MODEL: 2D SHEET H
FILE NAME: C:\TRANSYSTEMS\PW_LOCAL\TRANSYSTEMS-PW-01\DMS32656\62R19-SHT-ITS-CH-05A.DGN

ATLAS TECHNICAL CONSULTANTS, LLC
100 S. WACKER DRIVE, SUITE 400
CHICAGO, IL 60606

USER NAME = SALASL	DESIGNED - DJM	REVISED -	
	DRAWN - AJW	REVISED -	
PLOT SCALE = 0.16666667 ' / IN.	CHECKED - WDS	REVISED -	
PLOT DATE = 11/12/2025	DATE - 11/12/2025	REVISED -	

STATE OF ILLINOIS
DEPARTMENT OF TRANSPORTATION

I-80
COMMUNICATION HUT DETAILS

SCALE: | SHEET OF SHEETS | STA. TO STA.

F.A.I. RTE.	SECTION	COUNTY	TOTAL SHEETS	SHEET NO.
80	FAI 80 21 VLS	VARIOUS	467	462

CONTRACT NO. 62R19

ILLINOIS | FED. AID PROJECT

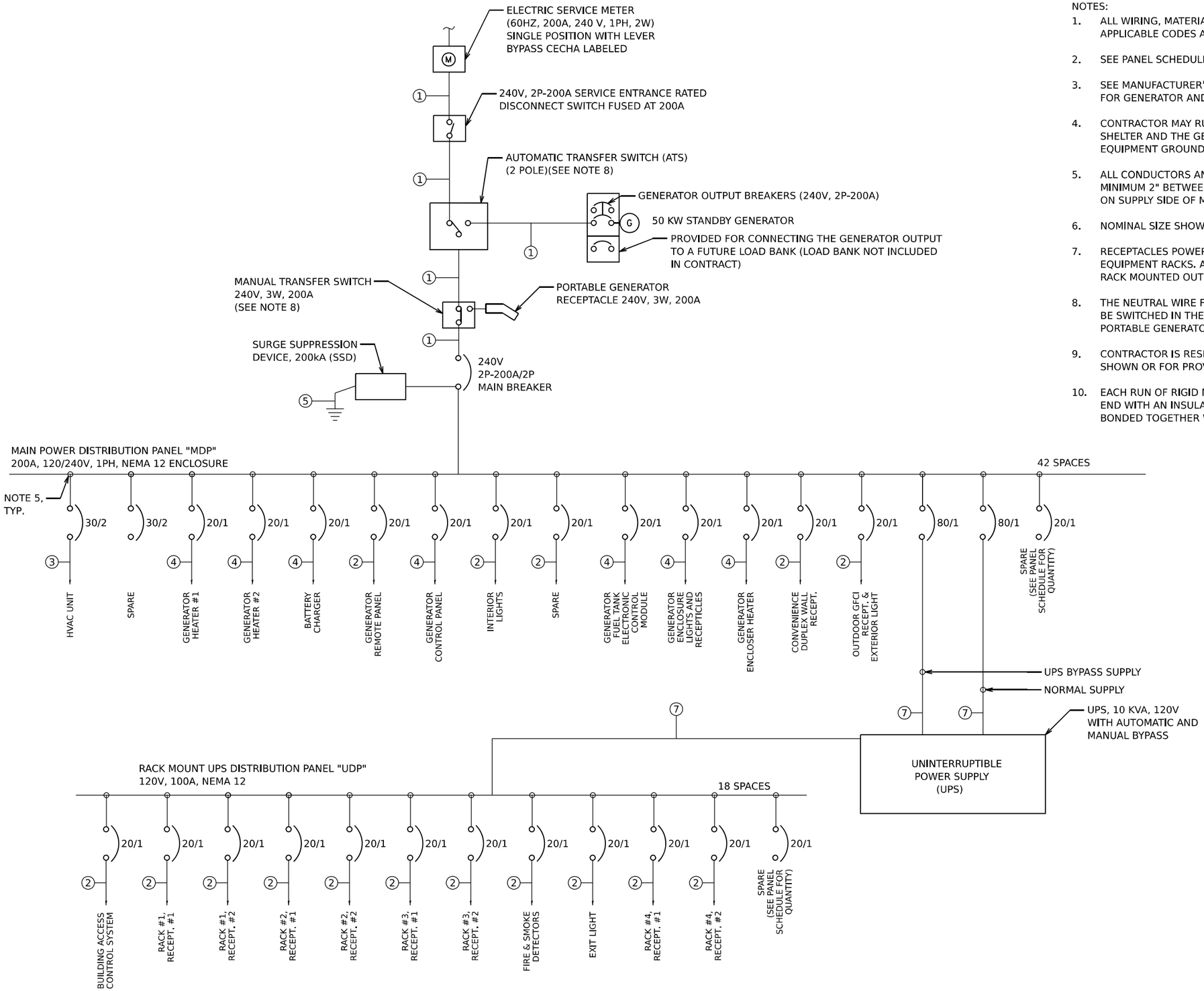

NOTES:

1. ALL WIRING, MATERIAL RATINGS AND INSTALLATION MUST CONFORM TO NEC AND OTHER APPLICABLE CODES AND STANDARDS.
2. SEE PANEL SCHEDULES FOR BREAKER POSITIONS AND BLANK PANEL SLOTS.
3. SEE MANUFACTURER'S LITERATURE TO CONFIRM QUANTITY AND SIZE OF BREAKERS NEEDED FOR GENERATOR AND OTHER MATERIALS BEING SUPPLIED.
4. CONTRACTOR MAY RUN UP TO 4 CIRCUITS IN A SINGLE CONDUIT BETWEEN THE EQUIPMENT SHELTER AND THE GENERATOR. EACH CIRCUIT MUST HAVE ITS OWN NEUTRAL; ONLY ONE EQUIPMENT GROUND IS NEEDED IN A CONDUIT.
5. ALL CONDUCTORS AND CABLE SHALL BE RUN IN CONDUIT: MINIMUM 3/4" INSIDE SHELTER, MINIMUM 2" BETWEEN SHELTER AND GENERATOR, MINIMUM SIZE FOR SERVICE ENTRANCE, ON SUPPLY SIDE OF METER AND 2" ON LOAD SIDE, UNLESS NOTED OTHERWISE.
6. NOMINAL SIZE SHOWN BREAKER MUST BE COORDINATED WITH ACTUAL HVAC UNIT SELECTED.
7. RECEPTACLES POWERED FROM PANEL "UDP" ARE ATTACHED TO CABLE LADDER OVER EQUIPMENT RACKS. A PAIR OF QUADPLEX OUTLETS ARE CONNECTED TO A TOTAL OF THREE RACK MOUNTED OUTLET STRIPS IN EACH RACK.
8. THE NEUTRAL WIRE FROM THE PERMANENTLY INSTALLED STANDBY GENERATOR SHALL NOT BE SWITCHED IN THE AUTOMATIC TRANSFER SWITCH (ATS). THE NEUTRAL WIRE FROM THE PORTABLE GENERATOR WILL BE SWITCHED IN THE MANUAL TRANSFER SWITCH.
9. CONTRACTOR IS RESPONSIBLE FOR SUBMITTING EQUIPMENT THAT CAN TERMINATE WIRE SIZES SHOWN OR FOR PROVIDING WIRING GUTTERS AND SPLICE KITS TO REDUCE CONDUCTOR SIZE.
10. EACH RUN OF RIGID METAL CONDUIT UPSTREAM OF, AND INCLUDING INTO "MDP", MUST END WITH AN INSULATED GROUNDING BUSHING. BUSHING INSIDE AN ENCLOSURE MUST BE BONDED TOGETHER WITH #6 AND CONNECTED TO THE GROUND BUS INSIDE EACH ENCLOSURE.

(1) (3) #3/0 & (1) #4 GND, 2" C
(2) (2) #12 & (1) #12 GND
(3) (2) #8 & (1) #10 GND
(4) (2) #10 & (1) #12 GND
(5) #2 GND WIRE
(6) NOT USED
(7) (2) #2 & (1) #8 GND, 3" C
(8) (2) #6 & (1) #8 GND

MODEL: 2D SHEET H
FILE NAME: C:\TRANSYSTEMS\PW_LOCAL\TRANSYSTEMS-PW-01\DMS32656\62R19-SHT-ITS-CH46.DGN

ATLAS
ATLAS TECHNICAL CONSULTANTS, LLC
100 S. WACKER DRIVE, SUITE 400
CHICAGO, IL 60606

USER NAME = SALASL	DESIGNED - REL	REVISED -	
	DRAWN - AJW	REVISED -	
PLOT SCALE = 0.16666667 ' / IN.	CHECKED - WDS	REVISED -	
PLOT DATE = 11/12/2025	DATE - 11/12/2025	REVISED -	

STATE OF ILLINOIS
DEPARTMENT OF TRANSPORTATION

I-80
COMMUNICATION HUT DETAILS

SCALE: | SHEET OF SHEETS | STA. TO STA.

F.A.I. RTE.	SECTION	COUNTY	TOTAL SHEETS	SHEET NO.
80	FAI 80 21 VLS	VARIOUS	467	463
		CONTRACT NO. 62R19		
		ILLINOIS	FED. AID PROJECT	

WIRE SIZE: #3/0 AWG
2P-200A, 65 KAIC MAIN BREAKER

PANEL: MDP
RATING: NEMA 12
MOUNTING: WALL

A B

CIRCUIT DESCRIPTION	TRIP	POLES	WIRE	POSITION	POSITION	WIRE	POLES	TRIP	CIRCUIT DESCRIPTION
HVAC UNIT	30	2	8	1	2	4	1	80	UPS NORMAL
				3	4	4	1	80	UPS BYPASS
SURGE ARRESTOR	30	2	2	5	6	-	1	20	SPARE
				7	8	12	1	20	GEN. REMOTE CTL PANEL
SPARE	30	2	-	9	10	10	1	20	GEN. FUEL TANK ECM
				11	12	10	1	20	GEN. FUEL TANK PUMP
INTERIOR LIGHTS	20	1	12	13	14	10	1	20	GEN. HEATER #1
THERMOSTAT	20	1	12	15	16	10	1	20	GEN. HEATER #2
INT. WALL RECEPT.	20	1	12	17	18	10	1	20	GEN. BATTERY CHARGER
EXT. RECEPT. & LIGHT	20	1	12	19	20	10	1	20	GEN. COOLING
SPARE	20	1	6	21	22	10	1	20	GEN. CONTROL PANEL
SPARE	20	1	6	23	24	6	1	20	SPARE
SPARE	20	1	6	25	26	-	1	20	SPARE
SPARE	20	1	-	27	28	-	1	20	SPARE
SPARE	20	1	-	29	30	-	1	20	SPARE
SPARE	20	1	-	31	32	-	1	20	SPARE
SPARE	20	1	-	33	34	-	1	20	SPARE
SPARE	20	1	-	35	36	-	1	20	SPARE
SPARE	20	1	-	37	28	-	1	20	SPARE
SPARE	20	1	-	39	40	-	1	20	SPARE
SPARE	20	1	-	41	42		1	20	SPARE

VOLTAGE: 120/240V CYCLE: 60 HZ PHASE: 1 WIRES: 3 SOLID NEUTRAL: 200 AMPS MAIN BREAKER: 200 AMP

WIRE SIZE: #2

PANEL: UDP
RATING: NEMA 12
MOUNTING: WALL

A
M.L.O.

CIRCUIT DESCRIPTION	TRIP	POLES	WIRE	POSITION	POSITION	WIRE	POLES	TRIP	CIRCUIT DESCRIPTION
RACK #1, RECEPT. #1	20	1	12	1	2	12	1	20	FIRE & SMOKE DETECTORS
RACK #1, RECEPT. #2	20	1	12	3	4	12	1	20	EXIT LIGHT
RACK #2, RECEPT. #1	20	1	12	5	6	-	1	20	BUILDING ACCESS CONTROL SYSTEM
RACK #2, RECEPT. #2	20	1	12	7	8	-	1	20	SPARE
RACK #3, RECEPT. #1	20	1	12	9	10	-	1	20	SPARE
RACK #3, RECEPT. #2	20	1	12	11	12	-	1	20	SPARE
RACK #4, RECEPT. #1	20	1	12	13	14	-	1	20	SPARE
RACK #4, RECEPT. #2	20	1	12	15	16	-	1	20	SPARE
SPARE	20	1	12	17	18	-	1	20	SPARE

VOLTAGE: 120 CYCLE: 60 HZ PHASE: 1 WIRES: 2 SOLID NEUTRAL: 100 AMPS MAIN LUG ONLY (M.L.O.)

LIGHTING FIXTURE SCHEDULE

SYMBOL	DESCRIPTION	VOLTAGE	LAMPS	MFR. AND CAT. NO.	REMARKS
A	4' LED LOW PROFILE SUSPENDED DIRECT LUMINAIRE	120 V	LED	PHILIPS / LIGHTOLIER ST-74-W-A-35A-40-U-35A ATLAS ILW4 & LED 4D	CEILING MOUNTED
B	LED LARGE GLASS LOW PROFILE WALL PACK	120 V	LED	PHILIPS / DAYBRITE WTN-24WLU-FWT	MOUNT 8'-0" ABOVE FINISHED GRADE
C	EMERGENCY LED LIGHT WITH NICKEL METAL HYBRID BATTERY	120 V	LED	DUAL LITE EV LED LITE GEAR	MOUNT ABOVE DOOR

NOTES:

1. BREAKERS SHOWN FOR GENERATOR LOADS THAT ARE NOT NEEDED SHALL BE FURNISHED AND LABELED "SPARE".
2. ALL INFORMATION SHOWN ON THIS SHEET IS ESTIMATED AND DEPENDS ON CONTRACTOR SUPPLIED MATERIALS.

MODEL: 2D SHEET H
FILE NAME: C:\TRANSYSTEMS\PW_LOCAL\TRANSYSTEMS-PW-01\DMS32656\62R19-SHT-ITS-CH-07.DGN

ATLAS TECHNICAL CONSULTANTS, LLC
100 S. WACKER DRIVE, SUITE 400
CHICAGO, IL 60606

USER NAME = SALASL	DESIGNED - REL	REVISED -	
	DRAWN - AJW	REVISED -	
PLOT SCALE = 0.16666667 ' / IN.	CHECKED - WDS	REVISED -	
PLOT DATE = 11/12/2025	DATE - 11/12/2025	REVISED -	

STATE OF ILLINOIS
DEPARTMENT OF TRANSPORTATION

I-80
COMMUNICATION HUT DETAILS

SCALE: SHEET OF SHEETS STA. TO STA.

F.A.I. RTE.	SECTION	COUNTY	TOTAL SHEETS	SHEET NO.
80	FAI 80 21 VLS	VARIOUS	467	464

CONTRACT NO. 62R19

ILLINOIS FED. AID PROJECT

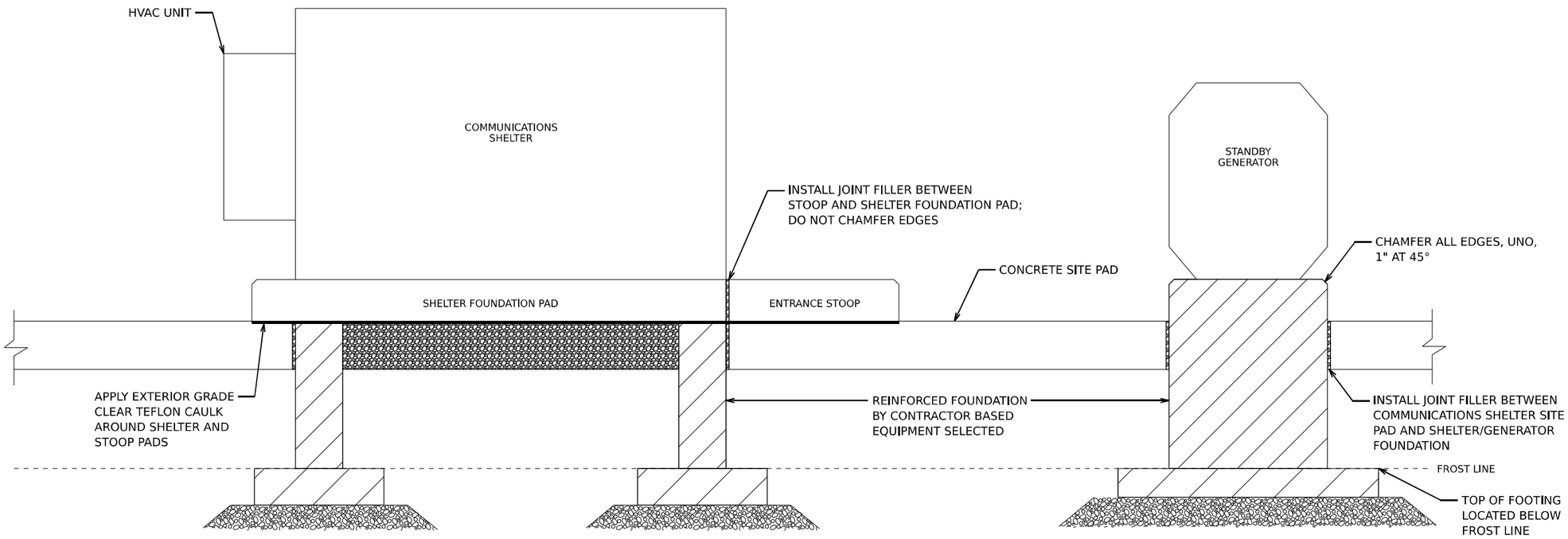

EQUIPMENT ELEVATION

N.T.S.

MODEL: 2D SHEET H
FILE NAME: C:\TRANSYSTEMS\PW_LOCAL\TRANSYSTEMS-PW-01\DMS32656\2819-SHT-ITS-CH-08.DGN

exp.

USER NAME = SALASL	DESIGNED - LS	REVISED -	
	DRAWN - LS	REVISED -	
PLOT SCALE = 0.16666667 ' / IN.	CHECKED - TMH	REVISED -	
PLOT DATE = 11/12/2025	DATE - 11/12/2025	REVISED -	

STATE OF ILLINOIS
DEPARTMENT OF TRANSPORTATION

I-80
COMMUNICATION HUT DETAILS

SCALE: | SHEET OF SHEETS | STA. TO STA.

F.A.I. RTE.	SECTION	COUNTY	TOTAL SHEETS	SHEET NO.
80	FAI 80 21 VLS	VARIOUS	467	465
		CONTRACT NO. 62R19		
		ILLINOIS	FED. AID PROJECT	

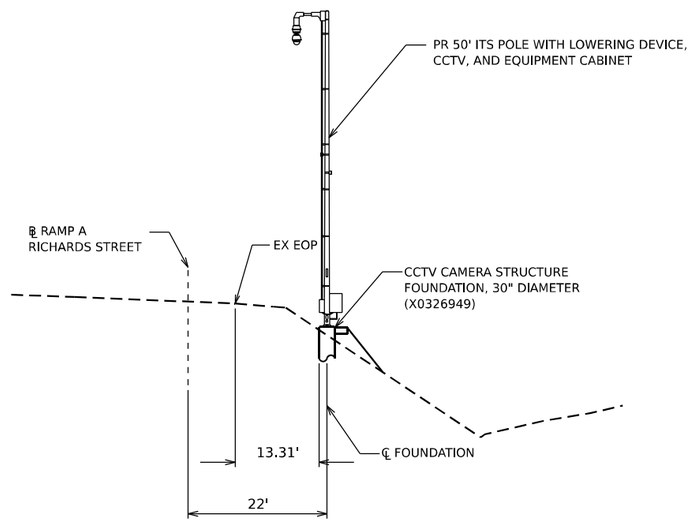

RICHARDS ST RAMP A STA 110+00
(LOOKING EAST)
CLOSED CIRCUIT TELEVISON CAMERA STRUCTURE
FOUNDATION, 30" DIAMETER

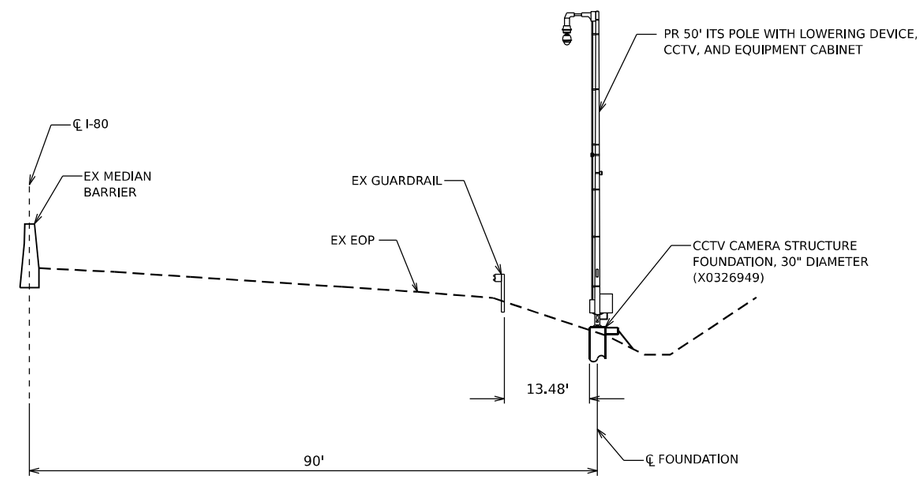

I-80 STA 732+00
(LOOKING EAST)
CLOSED CIRCUIT TELEVISON CAMERA STRUCTURE
FOUNDATION, 30" DIAMETER

MODEL: 2D SHEET H
FILE NAME: C:\TRANSYSTEMS\PW_LOCAL\TRANSYSTEMS-PW-03\DMS32656\62R19-SHT-ITS-XS-01.DGN

exp.

USER NAME = SALASL	DESIGNED - DJM	REVISED -	
	DRAWN - CS	REVISED -	
PLOT SCALE = 0.16666667 ' / IN.	CHECKED - REL	REVISED -	
PLOT DATE = 11/12/2025	DATE - 11/12/2025	REVISED -	

STATE OF ILLINOIS
DEPARTMENT OF TRANSPORTATION

I-80
ITS CROSS SECTIONS

SCALE: | SHEET OF SHEETS | STA. TO STA.

F.A.I. RTE.	SECTION	COUNTY	TOTAL SHEETS	SHEET NO.
80	FAI 80 21 VLS	VARIOUS	467	466

CONTRACT NO. 62R19

ILLINOIS | FED. AID PROJECT

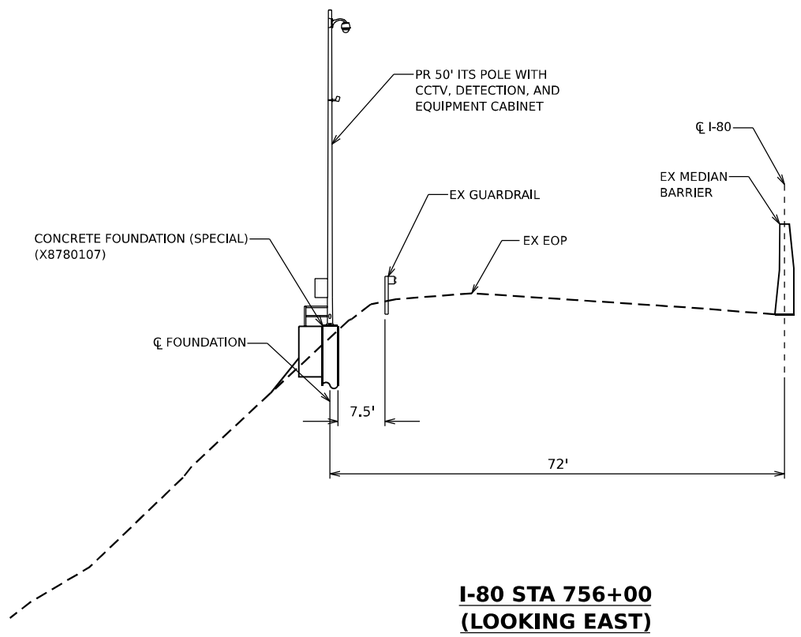

I-80 STA 756+00
(LOOKING EAST)
CONCRETE FOUNDATION (SPECIAL)

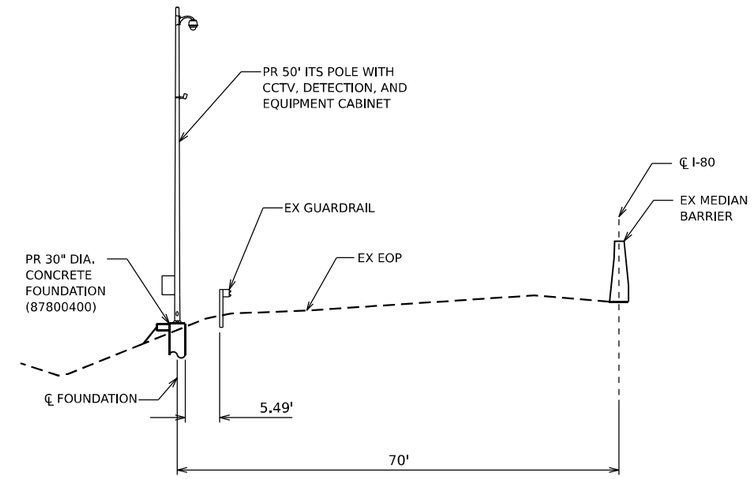

I-80 STA 769+00
(LOOKING EAST)
30" DIA. CONCRETE FOUNDATION

MODEL: 2D SHEET H
FILE NAME: C:\TRANSYSTEMS\PW_LOCAL\TRANSYSTEMS-PW-01\DMS32656\62R19-SHT-ITS-XS-02.DGN

exp.	USER NAME = SALASL	DESIGNED - DJM	REVISED -	STATE OF ILLINOIS DEPARTMENT OF TRANSPORTATION	I-80 ITS CROSS SECTIONS
		DRAWN - CS	REVISED -		
	PLOT SCALE = 0.16666667 ' / IN.	CHECKED - REL	REVISED -		
	PLOT DATE = 11/12/2025	DATE - 11/12/2025	REVISED -		SCALE: SHEET OF SHEETS STA. TO STA.

F.A.I. RTE.	SECTION	COUNTY	TOTAL SHEETS	SHEET NO.
80	FAI 80 21 VLS	VARIOUS	467	467
		CONTRACT NO. 62R19		
	ILLINOIS	FED. AID PROJECT		