02-27-2026 LETTING ITEM 024

F.A.P. RTE.	SECTION	COUNTY	TOTAL SHEETS	SHEET NO.
318	(3-B)BR	MARSHALL	72	1
		ILLINOIS	CONTRACT NO. 68E33	

STATE OF ILLINOIS
DEPARTMENT OF TRANSPORTATION

INDEX OF SHEETS

SHEET NO.	DESCRIPTION
1	COVER SHEET
2	GENERAL NOTES AND HIGHWAY STANDARDS
3-9	SUMMARY OF QUANTITIES
10-11	TYPICAL SECTIONS
12-15	SCHEDULE OF QUANTITIES
16	ALIGNMENT, TIES, AND BENCHMARKS
17	REMOVAL PLAN
18	PLAN AND PROFILE
19-22	SUGGESTED MAINTENANCE OF TRAFFIC
23	EROSION AND SEDIMENT CONTROL PLAN
24-47	STRUCTURAL PLANS (S.N. 062-0074)
48-52	EXISTING STRUCTURE PLANS (S.N. 062-0008)
53-63	DISTRICT DETAILS
64-72	CROSS SECTIONS

FOR LIST OF HIGHWAY STANDARDS, SEE SHEET NO. 2

PROPOSED HIGHWAY PLANS

FAP ROUTE 318 (IL 29)
SECTION (3-B)BR
PROJECT NO. NHPP-ZT6B(681)
IL29 OVER BARRVILLE CREEK
BRIDGE REPLACEMENT
MARSHALL COUNTY

D-94-046-18

LOCATION OF SECTION INDICATED THUS:-

C-94-068-18

TRAFFIC DATA

ROAD CLASSIFICATION:	OTHER PRINCIPAL ARTERIAL
DESIGN/POSTED SPEED:	55 MPH/55 MPH
ADT CURRENT (DESIGN):	7,150/2021 (8,132/2032)
ADTT CURRENT (DESIGN):	650/2021 (740/2032)
DHV:	1,220
PV%:	91%
SU%:	3.5%
MU%:	5.9%

BEGIN IMPROVEMENTS
℄ STA. 1275+65.22 (FAP 318)

END IMPROVEMENTS
℄ STA. 1280+23.94 (FAP 318)

EXISTING SN 062-0008 IL 29 OVER BARRVILLE CREEK TO BE REMOVED & REPLACED WITH SN 062-0074

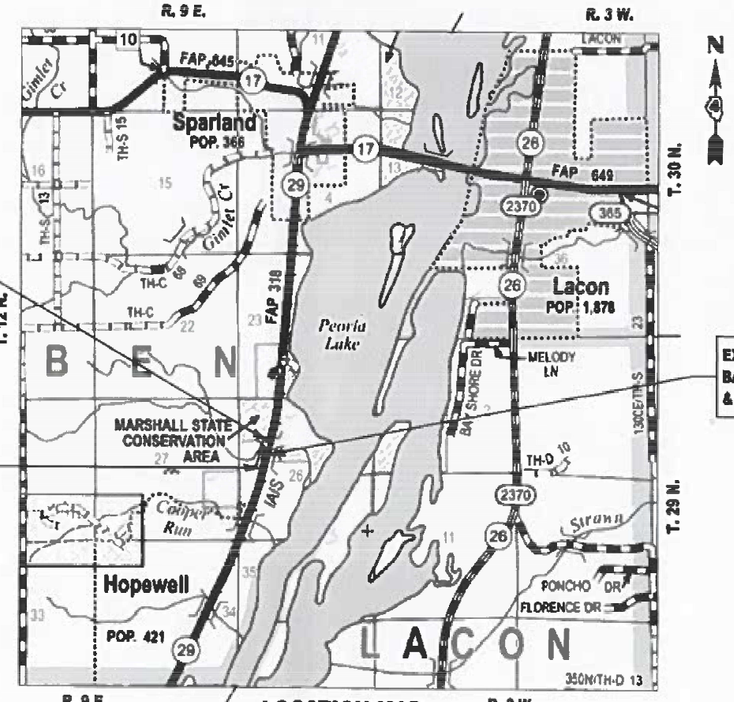

LOCATION MAP
NOT TO SCALE

GROSS LENGTH = 340.00 FT. = 0.064 MILE
NET LENGTH = 340.00 FT. = 0.064 MILE

PROJECT DESCRIPTION:
WORK INCLUDES STRUCTURAL REMOVAL, SUBSTRUCTURE AND SUPERSTRUCTURE CONSTRUCTION, APPROACH SLAB AND CONNECTOR PAVEMENT CONSTRUCTION, STAGED CONSTRUCTION WITH TEMPORARY BRIDGE SIGNALS, GUARDRAIL REPLACEMENT, CHANNEL EXCAVATION AND RIP-RAP INSTALLATION, RESURFACING OF IL 29.

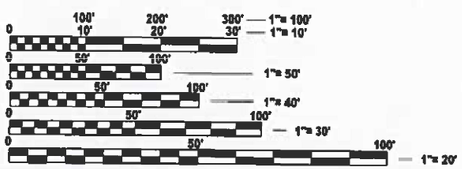

FULL SIZE PLANS HAVE BEEN PREPARED USING STANDARD ENGINEERING SCALES. REDUCED SIZED PLANS WILL NOT CONFORM TO STANDARD SCALES. IN MAKING MEASUREMENTS ON REDUCED PLANS, THE ABOVE SCALES MAY BE USED.

J.U.L.I.E.
JOINT UTILITY LOCATION INFORMATION FOR EXCAVATION
1-800-892-0123
OR 811

STATE OF ILLINOIS
DEPARTMENT OF TRANSPORTATION

SUBMITTED Dec 04 2025
Kensil A Garnett KSD
REGIONAL ENGINEER

January 23 26
ENGINEER OF DESIGN AND ENVIRONMENT

January 23 26
DIRECTOR OF HIGHWAYS PROJECT IMPLEMENTATION

PROJECT ENGINEER DAVID BROVIAK (309) 671-3943
PROJECT MANAGER ELIAS ELDERZI (309) 671-3482

CONTRACT NO. 68E33

ERIC J. LINDEMANN NO. 062-051170 STATE OF ILLINOIS
12-01-2025
ERIC J. LINDEMANN — DATE
ILLINOIS REG. PROFESSIONAL ENGINEER NO. 062-051170
EXPIRATION DATE 11-30-2027

PRINTED BY THE AUTHORITY OF THE STATE OF ILLINOIS

GENERAL NOTES

105.04 THE SOILS REPORT AND ALL SOILS DATA COLLECTED AND PROCESSED IN CONJUNCTION WITH THE DESIGN OF THIS IMPROVEMENT IS ON FILE AT THE DISTRICT OFFICE WHERE IT IS AVAILABLE FOR INSPECTION BY CONTRACTORS OR PROSPECTIVE BIDDERS. BY SUBMITTING A BID, THE CONTRACTOR ACKNOWLEDGES THAT THE SOILS REPORT AND DATA HAVE BEEN MADE AVAILABLE, THAT THE CONTRACTOR IS AWARE OF THE REPORT CONTENTS AND APPENDICES, AND THAT THE SOILS REPORT IS PART OF THE CONTRACT DOCUMENTS.

105.06 MICROSTATION FILES OF THIS PROJECT WILL BE MADE AVAILABLE TO THE CONTRACTOR AFTER CONTRACT AWARD. IF THERE IS A CONFLICT BETWEEN THE ELECTRONIC FILES AND THE PRINTED CONTRACT PLANS AND DOCUMENTS, THE PRINTED CONTRACT PLANS AND DOCUMENTS SHALL TAKE PRECEDENCE OVER THE ELECTRONIC FILES. THE CONTRACTOR SHALL ACCEPT ALL RISK ASSOCIATED WITH USING THE ELECTRONIC FILES AND SHALL HOLD THE DEPARTMENT HARMLESS FOR ANY ERRORS OR OMISSIONS IN THE ELECTRONIC FILES AND THE DATA CONTAINED THEREIN. ERRORS OR DELAYS RESULTING FROM THE USE OF THE ELECTRONIC FILES BY THE CONTRACTOR SHALL NOT RESULT IN AN EXTENSION OF TIME FOR ANY INTERIM OR FINAL COMPLETION DATE OR SHALL NOT BE CONSIDERED CAUSE FOR ADDITIONAL COMPENSATION. THE CONTRACTOR SHALL NOT USE, SHARE, OR DISTRIBUTE THESE ELECTRONIC FILES EXCEPT FOR THE PURPOSE OF CONSTRUCTING THIS CONTRACT. ANY CLAIMS BY THIRD PARTIES DUE TO USE OR ERRORS SHALL BE THE RESPONSIBILITY OF THE CONTRACTOR. THE CONTRACTOR SHALL INCLUDE THIS DISCLAIMER WITH THE TRANSFER OF THESE ELECTRONIC FILES TO ANY OTHER PARTIES AND SHALL INCLUDE APPROPRIATE LANGUAGE BINDING THEM TO SIMILAR RESPONSIBILITIES.

105.09A ALL ELEVATIONS SHOWN ON THE PLANS ARE ESTABLISHED FROM U.S.G.S. MEAN SEA LEVEL DATUM.

201.00 DUE TO THE POTENTIAL PRESENCE OF ENDANGERED BATS, NO TREE REMOVAL WILL BE ALLOWED ON THIS PROJECT BETWEEN APRIL 1ST AND SEPTEMBER 30TH.

202.08 EARTH EXCAVATION AND BACKFILL FOR PROPOSED CURB AND GUTTERS AND DRIVEWAY PAVEMENTS SHALL BE INCLUDED IN THE UNIT COST OF THE VARIOUS ITEMS.

204.00 PRIOR TO THE USE OF ANY PROPOSED BORROW AREAS, USE AREAS (TEMPORARY ACCESS ROADS, DETOURS, RUN-AROUNDS, ETC.) AND/OR WASTE AREAS, THE CONTRACTOR SHALL FILE THE REQUIRED ENVIRONMENTAL RESOURCE REQUEST SURVEYS ACCORDING TO SECTION 107.22 OF THE STANDARD SPECIFICATIONS. THESE SURVEYS ARE REQUIRED IN ORDER FOR THE DEPARTMENT TO CONDUCT CULTURAL AND BIOLOGICAL RESOURCE SURVEYS FOR THE PROPOSED SITE.

THE REQUIRED ENVIRONMENTAL RESOURCE DOCUMENTATION SHALL INCLUDE THE FOLLOWING:
- BDE FORM 2289 (BORROW SITE REVIEW)
- BDE FORM 2290 (WASTE/USE AREA REVIEW)
- A LOCATION MAP SHOWING THE SIZE LIMITS AND LOCATION OF THE USE AREA.
- COLOR PHOTOGRAPHS DEPICTING THE USE AREA.
- BORROW AREA ENTRY AGREEMENT FORM - D4 PI101

PRIOR TO ANY WASTE MATERIALS BEING REMOVED FROM THE CONSTRUCTION SITE THE REQUIRED ENVIRONMENTAL RESOURCE SURVEYS SHALL BE OBTAINED AND FILED BY THE CONTRACTOR. EXCESS WASTE PRODUCTS REMOVED FROM THE CONSTRUCTION SITE SHALL BE DISPOSED OF AS REQUIRED IN SECTION 202.03 OF THE STANDARD SPECIFICATIONS.

ANY PROTRUDING METAL BARS SHALL BE REMOVED PRIOR TO THE DISPOSAL OF BROKEN CONCRETE AT APPROVED DISPOSAL SITES.

PLEASE NOTE THAT A MINIMUM OF FOUR WEEKS SHALL BE ALLOWED FOR THE DISTRICT TO OBTAIN THE REQUIRED WASTE SITE ENVIRONMENTAL CLEARANCES AND SIX WEEKS FOR THE REQUIRED BORROW SITE ENVIRONMENTAL CLEARANCES.

351.00 AGGREGATE (BASE COURSE, SURFACE COURSE OR SHOULDERS), TYPE B SHALL BE REQUIRED FOR ALL GRANULAR CONSTRUCTION OF SIDE ROADS, ENTRANCES, AND MAILBOX TURNOUTS, WHETHER OR NOT PORTIONS OF THE SURFACES THUS CONSTRUCTED ARE TO BE COVERED WITH A BITUMINOUS SURFACE, EXCEPT WHERE NOTED DIFFERENTLY ON THE PLANS.

406.03 THE CONTRACTOR SHALL PROVIDE LABOR AND MATERIALS REQUIRED TO IMPRINT PAVEMENT STATION NUMBERS IN THE FINISHED SURFACE OF THE PAVEMENT AND/OR OVERLAY. THE NUMBERS SHALL BE APPROXIMATELY 3/4 INCH (20 MM) WIDE, 5 INCHES (125 MM) HIGH AND 5/8 INCH (15 MM) DEEP.

THE PAVEMENT STATION NUMBERS SHALL BE INSTALLED AS SPECIFIED HEREIN:

INTERVAL - 200 FEET (ENGLISH STATIONING) OR 100 METERS (METRIC STATIONING)

BOTTOM OF NUMBERS - 6 INCHES (150 MM) FROM THE INSIDE EDGE OF THE PAVEMENT MARKING

LOCATION:
- 2, 3, & 5 LANE PAVEMENTS - RIGHT EDGE OF PAVEMENT IN DIRECTION OF INCREASING STATIONS
- MULTI-LANE DIVIDED ROADWAYS - OUTSIDE EDGE OF PAVEMENT IN BOTH DIRECTIONS
- RAMPS - ALONG BASELINE EDGE OF PAVEMENT

POSITION - STATIONS SHALL BE PLACED SO THEY CAN BE READ FROM THE ADJACENT SHOULDER

FORMAT - ENGLISH (METRIC) PAVEMENT STATIONS SHALL USE THIS FORMAT "XXX (XX+X00)", WHERE X REPRESENTS THE PAVEMENT STATION

THIS WORK WILL NOT BE PAID FOR SEPARATELY, BUT WILL BE INCLUDED IN THE COST OF THE ASSOCIATED PAVEMENT AND/OR OVERLAY PAY ITEMS.

406.18 BUTT JOINTS SHALL NOT BE MILLED MORE THAN THREE (3) DAYS PRIOR TO PLACEMENT OF THE HMA SURFACE COURSE.

542.00 THE CONTRACTOR SHALL CONSULT WITH THE ENGINEER IN REGARD TO THE EXACT LENGTH OF THE BOX/PIPE CULVERTS, STORM SEWERS, AND/OR PIPE DRAINS REQUIRED PRIOR TO ORDERING THESE ITEMS.

606.14 TEN FEET (10 FT.) (3 M) TRANSITIONS SHALL BE USED TO MATCH PROPOSED ITEMS OF WORK TO EXISTING ITEMS IN THE FIELD UNLESS OTHERWISE SHOWN. THE TRANSITION SHALL BE PAID FOR AT THE CONTRACT UNIT PRICE FOR THE PROPOSED ITEM OF WORK SPECIFIED.

THE CONTRACTOR SHALL CONTACT THE ILLINOIS STATE ARCHAEOLOGICAL SURVEY (ISAS) TO ARRANGE A FIELD MEETING TWO WEEKS BEFORE CONSTRUCTION BEGINS. ISAS CONTACT INFO: ASST. DIRECTOR TOM LOEBEL, 217-244-4244, TJL2@ILLINOIS.EDU.

INDEX OF HIGHWAY STANDARDS

DISTRICT 4

STANDARD NO.	DESCRIPTION
205001-D4	SLOPE STEPS DETAIL
406101-D4	BUTT JOINTS (3 SHTS)
406301-D4	RURAL ENTRANCES FOR 3R PROJECTS (2 SHTS)
630101-D4	GUARDRAIL EROSION CONTROL TREATMENTS (2 SHTS)
667101-D4	PERMANENT SURVEY TIE AND PERMANENT SURVEY MARKERS TYPE I & TYPE II
780001-D4	TYPICAL PAVEMENT MARKINGS (2 SHTS)

STANDARD NO.	DESCRIPTION
000001-09	STANDARD SYMBOLS, ABBREVIATIONS AND PATTERNS
001001-02	AREAS OF REINFORCEMENT BARS
001006	DECIMAL OF AN INCH AND OF A FOOT
280001-07	TEMPORARY EROSION CONTROL SYSTEMS
420001-11	PAVEMENT JOINTS
420401-13	PAVEMENT CONNECTOR (PCC) FOR BRIDGE APPROACH SLAB
482001-02	HMA SHOULDER ADJACENT TO FLEXIBLE PAVEMENT
482011-03	HMA SHOULDER STRIPS/SHOULDERS WITH RESURFACING OR WIDENING AND RESURFACING PROJECTS
515001-04	NAME PLATE FOR BRIDGES
542401-04	METAL FLARED END SECTION FOR PIPE CULVERTS
610001-09	SHOULDER INLET WITH CURB
630001-13	STEEL PLATE BEAM GUARDRAIL
630201-07	PCC/HMA STABILIZATION AT STEEL PLATE BEAM GUARDRAIL
630301-09	SHOULDER WIDENING FOR TYPE 1 (SPECIAL) GUARDRAIL TERMINALS
631011-10	TRAFFIC BARRIER TERMINAL, TYPE 2
631031-18	TRAFFIC BARRIER TERMINAL, TYPE 6
701001-02	OFF-ROAD OPERATIONS, 2L, 2W, MORE THAN 15' (4.5m) AWAY
701006-05	OFF-ROAD OPERATIONS, 2L, 2W, 15' (4.5m) TO 24" (600mm) FROM PAVEMENT EDGE
701011-04	OFF-ROAD MOVING OPERATIONS, 2L, 2W, DAY ONLY
701201-05	LANE CLOSURE, 2L, 2W, DAY ONLY, FOR SPEEDS ≥ 45 MPH
701301-04	LANE CLOSURE, 2L, 2W, SHORT TIME OPERATIONS
701306-04	LANE CLOSURE, 2L, 2W, SLOW MOVING OPERATIONS - DAY ONLY, FOR SPEEDS ≥ 45 MPH
701311-03	LANE CLOSURE, 2L, 2W, MOVING OPERATIONS - DAY ONLY
701321-19	LANE CLOSURE, 2L, 2W, BRIDGE REPAIR WITH BARRIER
701326-04	LANE CLOSURE, 2L, 2W, PAVEMENT WIDENING, FOR SPEEDS ≥ 45 MPH
701901-11	TRAFFIC CONTROL DEVICES
704001-08	TEMPORARY CONCRETE BARRIER
725001-01	OBJECT AND TERMINAL MARKERS
780001-05	TYPICAL PAVEMENT MARKINGS
781001-04	TYPICAL APPLICATIONS RAISED REFLECTIVE PAVEMENT MARKERS
782006-01	GUARDRAIL AND BARRIER WALL REFLECTOR MOUNTING DETAILS

STATUS OF UTILITIES

UTILITY COMPANY:	ROUTE:	OFFSET:	LOCATION:	TYPE OF UTILITY:	TYPE OF CONFLICT:	DISPOSITION:
FRONTIER	IL 29	RT. 30' TO 35'	1276+00 TO 1279+00	BURIED FIBER	RIP RAP	RELOCATE
MEDIACOM	IL 29	LT. TO RT.	1277+20	BURIED FIBER	GUARDRAIL	CAUTION
	IL 29	RT. 30' TO 35'	1276+00 TO 1279+00	BURIED FIBER	RIP RAP	RELOCATE

POLYMERIZED BITUMINOUS MATERIALS (TACK COAT) RATES

SURFACE TYPE	RESIDUAL RATE
MILLED (HMA OR PCC)	0.08 LB / SQ FT
EXISTING PAVEMENT	0.08 LB / SQ FT
FOG COAT (BETWEEN LIFTS)	0.08 LB / SQ FT

HOT-MIX ASPHALT MIXTURE REQUIREMENTS

LOCATION (s):	MAINLINE	SHOULDERS	SHOULDERS	SHOULDERS	MAINLINE
MIXTURE USE(s):	POLYMER SURFACE 1.5"	POLYMER SHOULDERS (SURFACE LIFT 1.5")	HMA SHOULDERS (TOP BINDER 2")	SHOULDERS (LOWER LIFT 4.5")	INCIDENTAL SURFACE
AC/PC:	SBS or SBR 70-28	SBS or SBR 70-28	PG 64-22	PG 58-28	PG 64-22
DESIGN AIR VOIDS:	4.0% @ N=50	4.0% @ N=50	4.0% @ N=50	4.0% @ N=50	4.0% @ N=50
MIXTURE COMPOSITION: (MIXTURE GRADATION)	IL 9.5	IL 9.5	IL 9.5	IL 19.0	IL 9.5
FRICTION AGGREGATE:	MIX D	MIX D	N.A.	N.A.	MIX D
QUALITY MANAGEMENT:	QAQC	QAQC	QAQC	QAQC	QAQC
MTD	NO	NO	NO	NO	NO

NOTES:
1) INDIVIDUAL LIFT THICKNESS OF EACH MIX WILL BO NO LESS THAN THREE (3) TIMES NOMINAL MAXIMUM AGGREGATE SIZE AND NO MORE THAN FIVE (5) TIMES NOMINAL AGGREGATE MAXIMUM SIZE, UNLESS OTHERWISE APPROVED BY THE ENGINEER.
2) FOR DESIGN PURPOSES, MIXTURE WEIGHT FOR ALL MIXES IS DETERMINED TO BE 112.0 LB./S.Y./IN., UNLESS OTHERWISE NOTED.
3) SUBLOT SIZES FOR PFP AND QCP MIXES WILL BE 1,000 TONS, UNLESS OTHERWISE AGREED TO BY THE ENGINEER AND THE PAVING CONTRACTOR.

SUMMARY OF QUANTITIES

CONSTRUCTION CODE 0010

FUNDING NHPP 80% FEDERAL 20% STATE

CODE NO.	ITEM	UNIT	TOTAL QUANTITY	IL ROUTE 29 BRIDGE SN 062-0008 SN 062-0074
20200100	EARTH EXCAVATION	CU YD	1,430	1,430
20300100	CHANNEL EXCAVATION	CU YD	170	170
21101615	TOPSOIL FURNISH AND PLACE, 4"	SQ YD	1,325	1,325
25000210	SEEDING, CLASS 2A	ACRE	0.3	0.3
25000400	NITROGEN FERTILIZER NUTRIENT	POUND	25	25
25000500	PHOSPHORUS FERTILIZER NUTRIENT	POUND	25	25
25000600	POTASSIUM FERTILIZER NUTRIENT	POUND	25	25
25100115	MULCH, METHOD 2	ACRE	0.3	0.3
25100630	EROSION CONTROL BLANKET	SQ YD	1,329	1,329
28000305	TEMPORARY DITCH CHECKS	FOOT	108	108
28000400	PERIMETER EROSION BARRIER	FOOT	457	457
28000510	INLET FILTERS	EACH	4	4
28100107	STONE RIPRAP, CLASS A4	SQ YD	1,080	1,080
28200200	FILTER FABRIC	SQ YD	1,080	1,080

⊛ SPECIALTY ITEM

SUMMARY OF QUANTITIES

			CONSTRUCTION CODE	0010
			FUNDING	NHPP 80% FEDERAL 20% STATE
CODE NO.	ITEM	UNIT	TOTAL QUANTITY	IL ROUTE 29 BRIDGE SN 062-0008 SN 062-0074
40600295	POLYMERIZED BITUMINOUS MATERIALS (TACK COAT)	POUND	1,934	1,934
40600982	HOT-MIX ASPHALT SURFACE REMOVAL - BUTT JOINT	SQ YD	68	68
40600990	TEMPORARY RAMP	SQ YD	34	34
40604160	POLYMERIZED HOT-MIX ASPHALT SURFACE COURSE, IL-9.5, MIX "D", N50	TON	113	113
40800025	BITUMINOUS MATERIALS (PRIME COAT)	POUND	346.	346.
40800031	POLYMERIZED BITUMINOUS MATERIALS (TACK COAT)	POUND	222	222
40800050	INCIDENTAL HOT-MIX ASPHALT SURFACING	TON	52	52
42000080	PAVEMENT CONNECTOR (PCC) FOR BRIDGE APPROACH SLAB	SQ YD	189.7	189.7
44000100	PAVEMENT REMOVAL	SQ YD	365	365
44000155	HOT-MIX ASPHALT SURFACE REMOVAL, 1 1/2"	SQ YD	1,072	1,072
48203029	HOT-MIX ASPHALT SHOULDERS, 8"	SQ YD	226	226
50100300	REMOVAL OF EXISTING STRUCTURES NO. 1	EACH	1	1
50200100	STRUCTURE EXCAVATION	CU YD	305	305
50300100	FLOOR DRAINS	EACH	6	6

⊛ SPECIALTY ITEM

SUMMARY OF QUANTITIES

			CONSTRUCTION CODE	0010
			FUNDING	NHPP 80% FEDERAL 20% STATE
CODE NO.	ITEM	UNIT	TOTAL QUANTITY	IL ROUTE 29 BRIDGE SN 062-0008 SN 062-0074
50300225	CONCRETE STRUCTURES	CU YD	83.7	83.7
50300255	CONCRETE SUPERSTRUCTURE	CU YD	115.9	115.9
50300260	BRIDGE DECK GROOVING	SQ YD	548	548
50300280	CONCRETE ENCASEMENT	CU YD	5.0	5.0
50300300	PROTECTIVE COAT	SQ YD	654	654
50301350	CONCRETE SUPERSTRUCTURE (APPROACH SLAB)	CU YD	128	128
50401305	FURNISHING AND ERECTING PRECAST PRESTRESSED CONCRETE BEAMS, IL27N	FOOT	341	341
50800205	REINFORCEMENT BARS, EPOXY COATED	POUND	87,410	87,410
50800515	BAR SPLICERS	EACH	532	532
51201610	FURNISHING STEEL PILES HP12X63	FOOT	431	431
51202305	DRIVING PILES	FOOT	431	431
51203610	TEST PILE STEEL HP12X63	EACH	1	1
51204650	PILE SHOES	EACH	12	12
51500100	NAME PLATES	EACH	1	1

⊛ SPECIALTY ITEM

MODEL: SOQ 3 [Sheet]
FILE NAME: c:\bms\keg-pw-01\new user\dms25419\D468E33-sht-SOQ.dgn

Kaskaskia Engineering Group, LLC
PROFESSIONAL ENGINEERING
Illinois Professional Design Firm
Professional Engineering Group
LICENSED NO.
184.001973
20-5080101
208 E. Main St., Suite 101
Belleville, Illinois 62220
618.233.8877 phone
618.233.8877 fax
www.kaskaskiaeng.com

USER NAME = rjo	DESIGNED - RJO	REVISED -	
	DRAWN - RJO	REVISED -	
	CHECKED - EJL	REVISED -	
PLOT DATE = 9/26/2025	DATE -	REVISED -	

STATE OF ILLINOIS
DEPARTMENT OF TRANSPORTATION

SUMMARY OF QUANTITIES
IL 29 OVER BARRVILLE CREEK

SCALE: SHEET 3 OF 7 SHEETS STA. TO STA.

F.A.P. RTE.	SECTION	COUNTY	TOTAL SHEETS	SHEET NO.
318	(3-B)BR	MARSHALL	72	5

CONTRACT NO. 68E33

ILLINOIS | FED. AID PROJECT

SUMMARY OF QUANTITIES

			CONSTRUCTION CODE	0010
			FUNDING	NHPP 80% FEDERAL 20% STATE
CODE NO.	ITEM	UNIT	TOTAL QUANTITY	IL ROUTE 29 BRIDGE SN 062-0008 SN 062-0074
52200020	TEMPORARY SOIL RETENTION SYSTEM	SQ FT	209	209
54210182	PIPE ELBOW, 12"	EACH	8	8
54262712	METAL FLARED END SECTIONS 12"	EACH	4	4
58600101	GRANULAR BACKFILL FOR STRUCTURES	CU YD	129	129
59100100	GEOCOMPOSITE WALL DRAIN	SQ YD	60	60
60100945	PIPE DRAINS 12"	FOOT	56	56
60146304	PIPE UNDERDRAINS FOR STRUCTURES 4"	FOOT	96	96
61000050	CONCRETE THRUST BLOCKS	EACH	4	4
61000225	TYPE F INLET BOX, STANDARD 610001	EACH	4	4
⊛ 63000001	STEEL PLATE BEAM GUARDRAIL, TYPE A, 6 FOOT POSTS	FOOT	25	25
⊛ 63100045	TRAFFIC BARRIER TERMINAL, TYPE 2	EACH	2	2
⊛ 63100085	TRAFFIC BARRIER TERMINAL, TYPE 6	EACH	4	4
⊛ 63100167	TRAFFIC BARRIER TERMINAL, TYPE 1 (SPECIAL) TANGENT	EACH	2	2
63200310	GUARDRAIL REMOVAL	FOOT	459	459

⊛ SPECIALTY ITEM

MODEL: SOQ 4 [Sheet]
FILE NAME: c:\bms\keg-pw-01\new user\dms25419\D468E33-sht-SOQ.dgn

Kaskaskia Engineering Group, LLC
PROFESSIONAL ENGINEERING
Illinois Professional Design Firm
Professional Engineering Group
208 E. Main St., Suite 300
Belleville, Illinois 62220
618.233.8877 phone
618.233.8877 fax
www.kaskaskiaeng.com
LICENSE NO.
184.001775
20-5080101

USER NAME = rjo	DESIGNED - RJO	REVISED -	
	DRAWN - RJO	REVISED -	
	CHECKED - EJL	REVISED -	
PLOT DATE = 9/26/2025	DATE -	REVISED -	

STATE OF ILLINOIS
DEPARTMENT OF TRANSPORTATION

SUMMARY OF QUANTITIES
IL 29 OVER BARRVILLE CREEK

SCALE: SHEET 4 OF 7 SHEETS STA. TO STA.

F.A.P. RTE.	SECTION	COUNTY	TOTAL SHEETS	SHEET NO.
318	(3-B)BR	MARSHALL	72	6

CONTRACT NO. 68E33

ILLINOIS FED. AID PROJECT

SUMMARY OF QUANTITIES

			CONSTRUCTION CODE	0010
			FUNDING	NHPP 80% FEDERAL 20% STATE
CODE NO.	ITEM	UNIT	TOTAL QUANTITY	IL ROUTE 29 BRIDGE SN 062-0008 SN 062-0074
⊛ 66700205	PERMANENT SURVEY MARKERS, TYPE I	EACH	1	1
67000400	ENGINEER'S FIELD OFFICE, TYPE A	CAL MO	8	8
67100100	MOBILIZATION	L SUM	1	1
70100405	TRAFFIC CONTROL AND PROTECTION, STANDARD 701321	EACH	1	1
70100450	TRAFFIC CONTROL AND PROTECTION, STANDARD 701201	L SUM	1	1
70100460	TRAFFIC CONTROL AND PROTECTION, STANDARD 701306	L SUM	1	1
70100500	TRAFFIC CONTROL AND PROTECTION, STANDARD 701326	L SUM	1	1
70103815	TRAFFIC CONTROL SURVEILLANCE	CAL DA	128	128
70106500	TEMPORARY BRIDGE TRAFFIC SIGNALS	EACH	1	1
70106700	TEMPORARY RUMBLE STRIPS	EACH	6	6
70107025	CHANGEABLE MESSAGE SIGN	CAL DA	28	28
70300150	SHORT TERM PAVEMENT MARKING REMOVAL	SQ FT	1,209	1,209
70307120	TEMPORARY PAVEMENT MARKING - LINE 4" - TYPE IV TAPE	FOOT	3,482	3,482
70307210	TEMPORARY PAVEMENT MARKING - LINE 24"- TYPE IV TAPE	FOOT	24	24

SUMMARY OF QUANTITIES

	CODE NO.	ITEM	UNIT	TOTAL QUANTITY	IL ROUTE 29 BRIDGE SN 062-0008 SN 062-0074
				CONSTRUCTION CODE	0010
				FUNDING	NHPP 80% FEDERAL 20% STATE
	70400100	TEMPORARY CONCRETE BARRIER	FOOT	487.5	487.5
	70400200	RELOCATE TEMPORARY CONCRETE BARRIER	FOOT	487.5	487.5
	70600251	IMPACT ATTENUATORS, TEMPORARY (NON- REDIRECTIVE, NARROW), TEST LEVEL 3	EACH	2	2
	70600352	IMPACT ATTENUATORS, RELOCATE (NON- REDIRECTIVE,NARROW), TEST LEVEL 3	EACH	2	2
*	72501000	TERMINAL MARKER - DIRECT APPLIED	EACH	2	2
⊛	78009004	MODIFIED URETHANE PAVEMENT MARKING - LINE 4"	FOOT	1,956	1,956
*	78011025	GROOVING FOR RECESSED PAVEMENT MARKING 5"	FOOT	1,956	1,956
⊛	78100100	RAISED REFLECTIVE PAVEMENT MARKER	EACH	4	4
	78300200	RAISED REFLECTIVE PAVEMENT MARKER REMOVAL	EACH	6	6
	78300202	PAVEMENT MARKING REMOVAL - WATER BLASTING	SQ FT	653	653
	X5080530	BAR TERMINATORS	EACH	564	564
⊛	X6330725	STEEL PLATE BEAM GUARDRAIL (SHORT RADIUS)	FOOT	37.5	37.5
⊛	X6350204	LINEAR DELINEATOR PANELS, 4 INCH	EACH	8	8
	X6640104	FENCE REMOVAL	FOOT	49	49

⊛ SPECIALTY ITEM

MODEL: SOQ 6 [Sheet]
FILE NAME: c:\bms\keg-pw-01\new user\dms25419\D468E33-sht-SOQ.dgn

Kaskaskia Engineering Group, LLC
PROFESSIONAL ENGINEERING
Illinois Professional Design Firm
Professional Engineering Group
LICENSED NO.
184.001973
20-5080101
208 E. Main St., Suite 300
Belleville, Illinois 62220
618.233.8877 phone
618.233.8877 fax
www.kaskaskiaeng.com

USER NAME = rjo	DESIGNED - RJO	REVISED -	
	DRAWN - RJO	REVISED -	
	CHECKED - EJL	REVISED -	
PLOT DATE = 9/26/2025	DATE -	REVISED -	

STATE OF ILLINOIS
DEPARTMENT OF TRANSPORTATION

SUMMARY OF QUANTITIES
IL 29 OVER BARRVILLE CREEK

SCALE: SHEET 6 OF 7 SHEETS STA. TO STA.

F.A.P. RTE.	SECTION	COUNTY	TOTAL SHEETS	SHEET NO.
318	(3-B)BR	MARSHALL	72	8

CONTRACT NO. 68E33

ILLINOIS | FED. AID PROJECT

REV. 1/26/26

SUMMARY OF QUANTITIES

			CONSTRUCTION CODE	0010
			FUNDING	NHPP 80% FEDERAL 20% STATE
CODE NO.	ITEM	UNIT	TOTAL QUANTITY	IL ROUTE 29 BRIDGE SN 062-0008 SN 062-0074
Z0001002	GUARDRAIL AGGREGATE EROSION CONTROL	TON	67	67
Z0001495	BRIDGE APPROACH SHOULDER REMOVAL	SQ YD	71	71
Z0004552	APPROACH SLAB REMOVAL	SQ YD	118	118
Z0013798	CONSTRUCTION LAYOUT	L SUM	1	1
Z0048665	RAILROAD PROTECTIVE LIABILITY INSURANCE	L SUM	1	1
Ø Z0076600	TRAINEES	HOUR	1,000	1,000
Ø Z0076604	TRAINEES - TRAINING PROGRAM GRADUATE	HOUR	1,000	1,000

⊛ SPECIALTY ITEM Ø 0042

MODEL: SOQ 7 [Sheet]
FILE NAME: c:\bms\keg-pw-01\new user\dms25419\D468E33-sht-SOQ.dgn

Kaskaskia Engineering Group, LLC
PROFESSIONAL ENGINEERING
Illinois Professional Design Firm
Professional Engineering Group
208 E. Main St., Suite 300
Salem, Illinois 62210
618.233.8877 phone
618.233.8877 fax
www.kaskaskiaeng.com
LICENSE NO.
184.001775
20-5080101

USER NAME = rjo	DESIGNED - RJO	REVISED -	
	DRAWN - RJO	REVISED -	
	CHECKED - EJL	REVISED -	
PLOT DATE = 9/26/2025	DATE -	REVISED -	

STATE OF ILLINOIS
DEPARTMENT OF TRANSPORTATION

SUMMARY OF QUANTITIES
IL 29 OVER BARRVILLE CREEK

SCALE: SHEET 7 OF 7 SHEETS STA. TO STA.

F.A.P. RTE.	SECTION	COUNTY	TOTAL SHEETS	SHEET NO.
318	(3-B)BR	MARSHALL	72	9

CONTRACT NO. 68E33

ILLINOIS FED. AID PROJECT

REV. 1/5/26

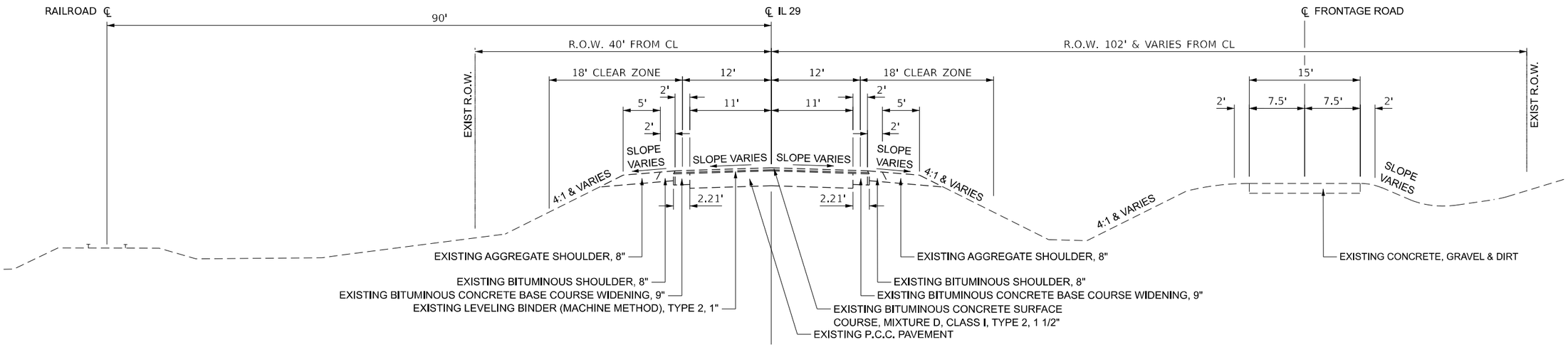

EXISTING TYPICAL SECTION

STA 1275+65.22 TO STA 1276+28.03 RT
STA 1275+68.88 TO STA 1276+61.08 LT
STA 1278+73.65 TO 1280+23.94 RT
STA 1279+14.93 TO STA 1280+18.34 LT

EXISTING BRIDGE & APPROACH SLABS
STA 1277+50.42 TO STA 1278+33.58

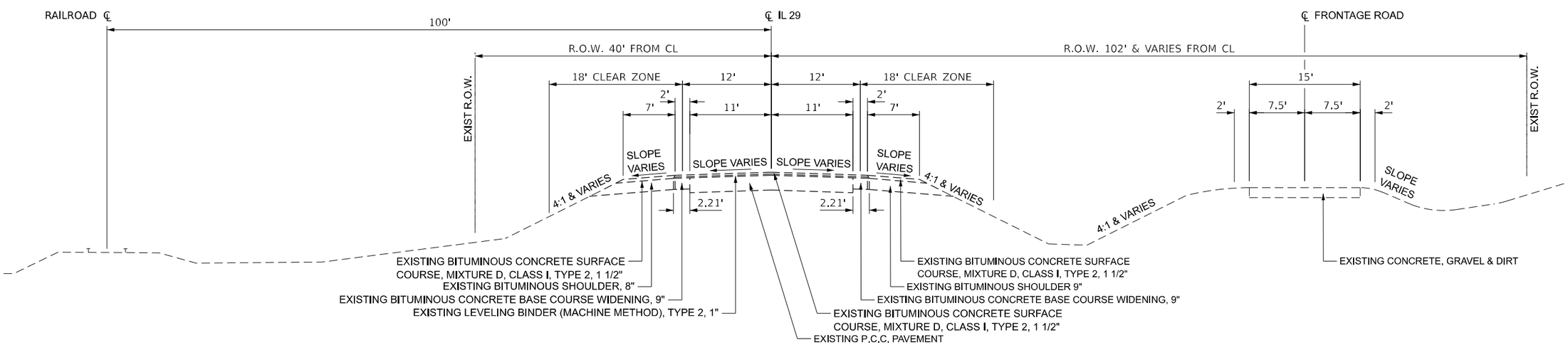

EXISTING TYPICAL SECTION

STA 1276+28.03 TO 1277+53.15 RT
STA 1276+61.08 TO 1277+59.15 LT
STA 1278+24.85 TO 1278+73.65 RT
STA 1278+30.85 TO 1279+14.93 LT

MODEL: Existing Typical Sections [Sheet]
FILE NAME: c:\bms\keg-pw-01\new user\dms25419\D468E33-sht-Typicals.dgn

Kaskaskia Engineering Group, LLC
PROFESSIONAL REGISTRATIONS: Illinois Professional Design Firm, Professional Engineering Group
LICENSE No. 184.001771, 20-5500586

USER NAME = rjo	DESIGNED - RJO	REVISED -	STATE OF ILLINOIS DEPARTMENT OF TRANSPORTATION
	DRAWN - RJO	REVISED -	
	CHECKED - EJL	REVISED -	
PLOT DATE = 9/26/2025	DATE -	REVISED -	

TYPICAL SECTIONS
IL 29 OVER BARRVILEE CREEK

SCALE: | SHEET 1 OF 2 SHEETS | STA. 1276+00 TO STA. 1279+40

F.A.P. RTE.	SECTION	COUNTY	TOTAL SHEETS	SHEET NO.
318	(3-B)BR	MARSHALL	72	10

CONTRACT NO. 68E33
ILLINOIS | FED. AID PROJECT

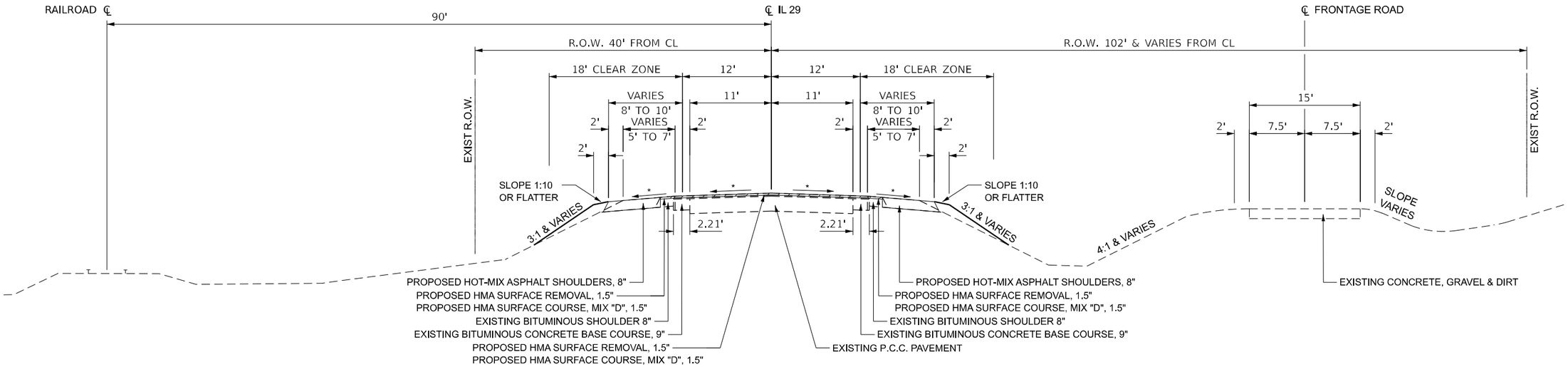

* MATCH EXISTING

PROPOSED TYPICAL SECTION

HMA SHOULDER WIDENING LT
STA 1275+68.88 TO STA 1276+35.17 (1' TO 10' WIDE)

STA 1275+65.00 TO STA 1276+29.12

HMA SHOULDER WIDENING RT
STA 1275+65.22 TO STA 1276+29.12 (1' TO 10' WIDE)

STA 1277+14.30 TO STA 1277+33.27 APPROACH PAVEMENT
STA 1277+33.27 TO STA 1278+50.74 BRIDGE & BRIDGE APPROACH
STA 1278+50.74 TO 1278+69.71 APPROACH PAVEMENT

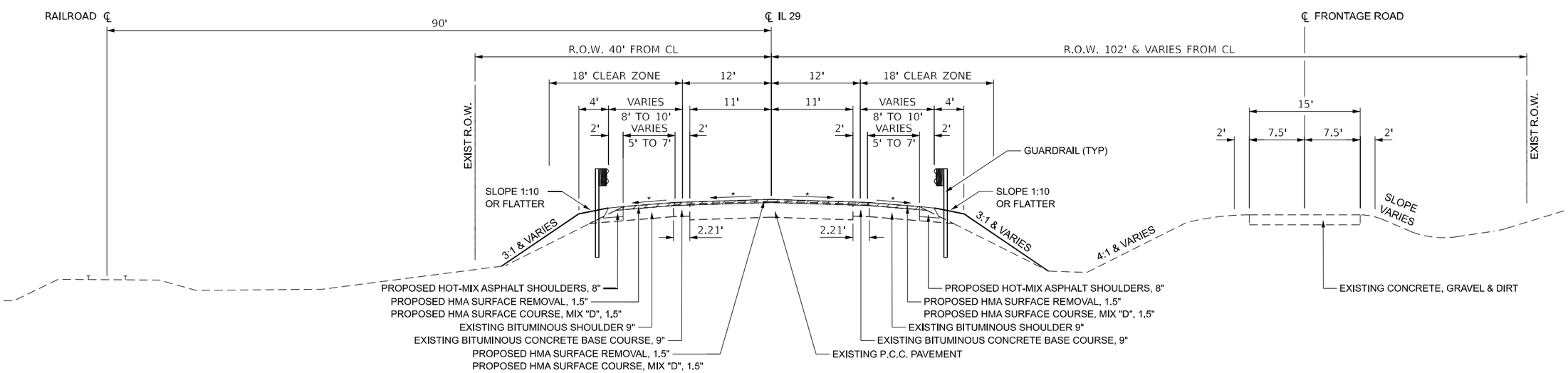

* MATCH EXISTING

PROPOSED TYPICAL SECTION

HMA SHOULDER WIDENING LT
STA 1276+35.17 TO STA 1279+48.83 (10' WIDE)
STA 1279+48.83 TO STA 1280+18.34 (10' TO 1' WIDE)

STA 1276+29.12 TO 1277+14.30
STA 1278+69.71 TO 1280+23.94

HMA SHOULDER WIDENING RT
STA 1276+29.12 TO STA 1279+48.92 (10' WIDE)
STA 1279+48.92 TO STA 1280+23.94 (10' TO 1' WIDE)

MODEL: Proposed Typical Sections [Sheet]
FILE NAME: c:\bms\keg-pw-01\new user\dms25419\D468E33-sht-Typicals.dgn

Kaskaskia Engineering Group, LLC
PROFESSIONAL REGISTRATIONS: Illinois Professional Design Firm, Professional Engineering Group
LICENSE NO.: 184.001773, 20-5106586

USER NAME = rjo	DESIGNED - RJO	REVISED -	STATE OF ILLINOIS DEPARTMENT OF TRANSPORTATION
	DRAWN - RJO	REVISED -	
	CHECKED - EJL	REVISED -	
PLOT DATE = 9/26/2025	DATE -	REVISED -	

TYPICAL SECTIONS
IL 29 OVER BARRVILEE CREEK

SCALE: | SHEET 2 OF 2 SHEETS | STA. 1276+00 TO STA. 1279+40

F.A.P. RTE.	SECTION	COUNTY	TOTAL SHEETS	SHEET NO.
318	(3-B)BR	MARSHALL	72	11
		CONTRACT NO. 68E33		
		ILLINOIS FED. AID PROJECT		

REMOVAL SCHEDULE

LOCATION				HOT-MIX ASPHALT SURFACE REMOVAL - BUTT JOINT	PAVEMENT REMOVAL	HOT-MIX ASPHALT SURFACE REMOVAL, 1 1/2"	GUARDRAIL REMOVAL	SHORT TERM PAVEMENT MARKING REMOVAL	RAISED REFLECTIVE PAVEMENT MARKER REMOVAL	PAVEMENT MARKING REMOVAL - WATER BLASTING	BRIDGE APPROACH SHOULDER REMOVAL	APPROACH SLAB REMOVAL	FENCE REMOVAL
				40600982	44000100	44000155	63200310	70300150	78300200	78300202	Z0001495	Z0004552	X6640104
IL 29				(SQ YD)	(SQ YD)	(SQ YD)	(FOOT)	(SQ FT)	(EACH)	(SQ FT)	(SQ YD)	(SQ YD)	(FOOT)
STATION	TO	STATION	LT/RT										
IL 29													
1275+65	TO	1275+75	LT	17.2									
1275+65	TO	1275+75	RT	16.9									
1275+75	TO	1277+14	LT			269.8							
1275+75	TO	1277+14	RT			291.0			3.0				
1277+14	TO	1277+59	LT		95.2								
1277+14	TO	1277+53	RT		87.9								
1277+50	TO	1277+75	LT									30.9	
1277+50	TO	1277+70	RT									28.1	
1277+53	TO	1277+69	RT								17.6		
1277+59	TO	1277+75	LT								17.7		
1278+09	TO	1278+25	RT								17.7		
1278+15	TO	1278+31	LT								17.6		
1278+09	TO	1278+34	RT									30.9	
1278+14	TO	1278+34	LT									28.1	
1278+25	TO	1278+70	RT		90.5								
1278+31	TO	1278+70	LT		91.3								
1278+70	TO	1280+14	LT			269.6							
1278+70	TO	1280+14	RT			241.4			3.0				
1280+14	TO	1280+24	LT	16.9									
1280+14	TO	1280+24	RT	16.4									
1276+66	TO	1277+05	RT										
1276+42	TO	1277+75	LT				133.1						
1277+75	TO	1278+16	LT				41.0						
1278+16	TO	1278+73	LT				57.0						
1276+98	TO	1277+68	RT				70.2						
1277+68	TO	1278+09	RT				41.0						
1278+09	TO	1279+25	RT				116.8						
1276+49	TO	1276+59	RT										16.0
1273+86	TO	1282+55	ST. 1					580.2		652.5			
1273+86	TO	1282+55	ST. 2					628.2					
1278+19	TO	1278+52	RT										33.0
TOTAL				67.3	364.9	1071.8	459.0	1208.4	6.0	652.5	70.6	118.0	49.0
ADJUSTED TOTAL				**68.0**	**365.0**	**1072**	**459**	**1209**	**6**	**653**	**71**	**118**	**49**

MODEL: SCH 1 [Sheet]
FILE NAME: c:\bms\kes-pw-01\new user\dms25419\D468E33-sht-Schedule.dgn

Kaskaskia Engineering Group, LLC
PROFESSIONAL REGISTRATIONS
Illinois Professional Design Firm
Professional Engineering Group
LICENSE NO.
184.001773
20-5106586
200 E. Main St., Suite 300
Belleville, Illinois 62220
618.233.8977 phone
618.233.8978 fax
www.kaskaskiaeng.com

USER NAME = Eric.Thomas	DESIGNED - RJO	REVISED -	
	DRAWN - RJO	REVISED -	
	CHECKED - EJL	REVISED -	
PLOT DATE = 12/7/2022	DATE -	REVISED -	

STATE OF ILLINOIS
DEPARTMENT OF TRANSPORTATION

SCHEDULE OF QUANTITIES
IL 29 OVER BARRVILLE CREEK

SCALE: | SHEET 1 OF 4 SHEETS | STA. TO STA.

F.A.P. RTE.	SECTION	COUNTY	TOTAL SHEETS	SHEET NO.
318	(3-B)BR	MARSHALL	72	12

CONTRACT NO. 68E33

ILLINOIS | FED. AID PROJECT

PAVING SCHEDULE

LOCATION				POLYMERIZED BITUMINOUS MATERIALS (TACK COAT)	TEMPORARY RAMP	POLYMERIZED HOT-MIX ASPHALT SURFACE COURSE, IL-9.5, MIX "D", N50	BITUMINOUS MATERIALS (PRIME COAT)	POLYMERIZED BITUMINOUS MATERIALS (TACK COAT)	INCIDENTAL HOT-MIX ASPHALT SURFACING	PAVEMENT CONNECTOR (PCC) FOR BRIDGE APPROACH SLAB	HOT-MIX ASPHALT SHOULDERS, 8"
				40600295	40600990	40604160	40800025	40800031	40800050	42000080	48203029
ROAD NAME				POUND	(SQ YD)	(TON)	(POUNDS)	(POUNDS)	(TON)	(SQ YD)	(SQ YD)
STATION	TO	STATION	LOCATION								
IL 29			LT/RT								
1275+65.22	TO	1277+14.30	LT/RT	719.4							
1276+28.05	TO	1277+14.30	RT	61.5							
1276+61.04	TO	1277+14.30	LT	61.6							
1275+65.22	TO	1276+28.05	RT	65.8		3.8					
1275+68.88	TO	1276+61.04	LT	55.0		3.2					
1278+69.71	TO	1280+23.94	LT/RT	729.8		45.5					
1278+69.71	TO	1278+73.66	RT	3.1							
1278+69.71	TO	1279+15.04	LT	46.4							
1278+69.71	TO	1280+18.34	LT	81.9		4.8					
1278+69.71	TO	1280+23.94	RT	109.4		6.4					
1275+65.22	TO	1275+67.22	LT/RT		7.1						
1277+12.30	TO	1277+14.30	LT/RT		9.8						
1278+69.70	TO	1278+71.70	LT/RT		9.8						
1280+21.94	TO	1280+23.94	LT/RT		6.9						
1275+65.20	TO	1277+14.30	LT/RT			49.1					
1278+69.71	TO	1280+23.94	LT/RT								
1276+65.20		DRV	RT				300.8	192.5	44.9		
1278+92.30		DRV	LT				45.2	28.9	6.7		
1277+14.30	TO	1277+33.27	LT/RT							94.8	
1278+50.74	TO	1278+69.71	LT/RT							94.8	
1275+68.88	TO	1276+61.08	LT								38.2
1275+65.22	TO	1277+14.30	RT								45.7
1278+30.85	TO	1280+18.34	LT								65.5
1278+69.71	TO	1280+23.94	RT								76.1
TOTAL				1933.9	33.6	112.8	346.0	221.4	51.6	189.7	225.5
ADJUSTED TOTAL				**1934**	**34**	**113**	**346**	**222**	**52**	**189.7**	**226**

MODEL: SCH 2 [Sheet]
FILE NAME: c:\bms\kcg-pw-01\new user\dms25419\D468E33-sht-Schedule.dgn

Kaskaskia Engineering Group, LLC
PROFESSIONAL REGISTRATIONS
Illinois Professional Design Firm 184.001773
Professional Engineering Group 20-5000501
209 E. Main St., Suite 101
Belleville, Illinois 62220
618.233.8877 phone
618.233.8877 fax
www.kaskaskiaeng.com

USER NAME = rjo	DESIGNED - RJO	REVISED -	
	DRAWN - RJO	REVISED -	
	CHECKED - EJL	REVISED -	
PLOT DATE = 9/26/2025	DATE -	REVISED -	

STATE OF ILLINOIS
DEPARTMENT OF TRANSPORTATION

SCHEDULE OF QUANTITIES
IL 29 OVER BARRVILLE CREEK

SCALE: | SHEET 2 OF 4 SHEETS | STA. | TO STA.

F.A.P. RTE.	SECTION	COUNTY	TOTAL SHEETS	SHEET NO.
318	(3-B)BR	MARSHALL	72	13

CONTRACT NO. 68E33

ILLINOIS | FED. AID PROJECT

GUARDRAIL SCHEDULE

LOCATION				NOTES	STEEL PLATE BEAM GUARDRAIL, TYPE A, 6 FOOT POSTS	TRAFFIC BARRIER TERMINAL, TYPE 2	TRAFFIC BARRIER TERMINAL, TYPE 6	TRAFFIC BARRIER REMINAL, TYPE 1 (SPECIAL) TANGENT	TERMINAL MARKER - DIRECT APPLIED	LINEAR DELINEATOR PANELS, 4 INCH	STEEL PLATE BEAM GUARDRAIL (SHORT RADIUS)	GUARDRAIL AGGREGATE EROSION CONTROL
					63000001	63100045	63100085	63100167	72501000	X6350204	X6330725	Z0001002
STATION	TO	STATION	LT/RT		(FOOT)	(EACH)	(EACH)	(EACH)	(EACH)	(EACH)	(FOOT)	(TON)
IL 29												
1276+53	TO	1277+53	LT		12.5		1.0	1.0	1.0	2.0		19.8
1278+39	TO	1278+86	LT			1.0	1.0			2.0	12.5	12.3
1276+90	TO	1277+46	RT			1.0	1.0			2.0	25.0	14.8
1278+31	TO	1279+31	RT		12.5		1.0	1.0	1.0	2.0		19.8
TOTAL					25	2	4	2	2	8	37.5	66.7
ADJUSTED TOTAL					**25**	**2**	**4**	**2**	**2**	**8**	**37.5**	**67**

IMPACT ATTENUATOR SCHEDULE

LOCATION			IMPACT ATTENUATORS, TEMPORARY (NON-REDIRECTIVE, NARROW), TEST LEVEL 3	IMPACT ATTENUATORS, RELOCATE (NON-REDIRECTIVE, NARROW), TEST LEVEL 3
			70600251	70600352
IL 29			(EACH)	(EACH)
STATION	TO	STATION		
1275+49			1.0	1.0
1280+35			1.0	1.0
TOTAL			2	2
ADJUSTED TOTAL			2	2

SEEDING SCHEDULE

LOCATION				TOPSOIL FURNISH AND PLACE, 4"	SEEDING, CLASS 2A	NITROGEN FERILIZER NUTRIENT	PHOSPHORUS FERTILIZER NUTRIENT	POTASSIUM FERTILIZER NUTRIENT	MULCH METHOD 2	EROSION CONTROL BLANKET
				21101615	25000210	25000400	25000500	25000600	25100115	25100630
IL 29			LOCATION	(SQ YD)	(ACRE)	(POUND)	(POUND)	(POUND)	(ACRE)	(SQ YD)
STATION	TO	STATION	LT/RT							
1275+59.7	TO	1277+64.8	LT	257.1	0.05	4.5	4.5	4.5	0.05	258.0
1278+30.1	TO	1278+81.4	LT	71.7	0.01	0.9	0.9	0.9	0.01	72.0
1278+97.2	TO	1280+35.0	LT	153.0	0.03	2.7	2.7	2.7	0.03	154.0
1275+55.0	TO	1276+64.5	RT	79.5	0.02	1.8	1.8	1.8	0.02	80.0
1276+92.7	TO	1277+53.2	RT	216.0	0.04	3.6	3.6	3.6	0.04	217.0
1278+15.0	TO	1280+35.0	RT	547.4	0.11	9.9	9.9	9.9	0.11	548.0
TOTAL				1324.93	0.26	23.4	23.4	23.4	0.26	1329.0
ADJUSTED TOTAL				**1325**	**0.30**	**25**	**25**	**25**	**0.30**	**1329**

EARTHWORK SCHEDULE

LOCATION			EARTH EXCAVATION	CHANNEL EXCAVATION	FOR INFORMATION ONLY		
					SHRINKAGE OF EARTH EXCAVATION	EMBANKMENT	EARTHWORK BALANCE WASTE STORAGE
			20200100	20300100			
IL 29			(CU YD)	(CU YD)	(CU YD)	(CU YD)	(CU YD)
STATION	TO	STATION					
S.N. 062-0074				170.0			
1276+00		1276+50	0		0.0	0.0	0.0
1276+50		1277+00	5.8		4.3	0.0	4.3
1277+00		1277+50	10.1		7.6	0.0	7.6
1277+50		1278+00	52.6		39.5	11.1	28.3
1278+00		1278+50	596.5		447.3	11.1	436.2
1278+50		1279+00	604.6		453.4	5.6	447.8
1279+00		1279+50	84.6		63.5	9.1	54.4
1279+50		1280+00	44.4		33.3	6.5	26.9
1280+00		1280+50	31.0		23.2	3.1	20.1
1280+50			0		0.0	0.0	0.0
TOTAL			1429.6	170	1072.2	46.6	1025.6
ADJUSTED TOTAL			**1430**	**170**	**1073**	**47**	**1026**

MODEL: SCH 3 [Sheet]
FILE NAME: c:\bms\keg-pw-01\new user\dms25419\D468E33-sht-Schedule.dgn

Kaskaskia Engineering Group, LLC
PROFESSIONAL REGISTRATIONS
Illinois Professional Design Firm
Professional Engineering Group
209 E. Main St., Suite 300
Belleville, Illinois 62220
Phone: 618.277.0900
618.233.1977 Fax
www.kaskaskiaeng.com
LICENSE No.
184.004793
20-5500586

USER NAME = rjo	DESIGNED - RJO	REVISED -	
	DRAWN - RJO	REVISED -	
	CHECKED - EJL	REVISED -	
PLOT DATE = 9/26/2025	DATE -	REVISED -	

STATE OF ILLINOIS
DEPARTMENT OF TRANSPORTATION

SCHEDULE OF QUANTITIES
IL 29 OVER BARRVILLE CREEK

SCALE: | SHEET 3 OF 4 SHEETS | STA. TO STA.

F.A.P. RTE.	SECTION	COUNTY	TOTAL SHEETS	SHEET NO.
318	(3-B)BR	MARSHALL	72	14
		CONTRACT NO. 68E33		
		ILLINOIS FED. AID PROJECT		

STAGING SCHEDULE

LOCATION				TRAFFIC CONTROL AND PROTECTION, STANDARD 701321	TRAFFIC CONTROL AND PROTECTION STANDARD 701201	TRAFFIC CONTROL AND PROTECTION STANDARD 701306	TRAFFIC CONTROL AND PROTECTION STANDARD 701326	TEMPORARY BRIDGE TRAFFIC SIGNALS	TEMPORARY RUMBLE STRIPS	CHANGEABLE MESSAGE SIGN	TEMPORARY CONCRETE BARRIER	RELOCATE TEMPORARY CONCRETE BARRIER
				70100405	70100450	70100460	70100500	70106500	70106700	70107025	70400100	70400200
ROAD NAME				(EACH)	(L SUM)	(L SUM)	(L SUM)	(EACH)	(EACH)	(CAL DA)	(FOOT)	(FOOT)
STATION	TO	STATION										
IL 29												
1275+65	TO	1280+24		1.0	1.0	1.0	1.0	1.0		28.0		
1275+49	TO	1280+35	STAGE 1						6.0		487.5	
1275+49	TO	1280+35	STAGE 2									487.5
TOTAL				1.0	1.0	1.0	1.0	1.0	6.0	28.0	487.5	487.5
ADJUSTED TOTAL				1	1	1	1	1	6	28	487.5	487.5

PAVEMENT MARKING SCHEDULE

LOCATION			TEMPORARY PAVEMENT MARKING - LINE 4" - TYPE IV TAPE	TEMPORARY PAVEMENT MARKING - LINE 24" - TYPE IV TAPE	MODIFIED URETHANE PAVEMENT MARKING - LINE 4"	GROOVING FOR RECESSED PAVEMENT MARKING 5"	RAISED REFLECTIVE PAVEMENT MARKER
			70307120	70307210	78009004	78011025	78100100
IL 29			(FOOT)	(FOOT)	(FOOT)	(FOOT)	(EACH)
STATION	TO	STATION					
MOT STAGE 1							
1273+86	TO	1282+55	1740.8	24			
MOT STAGE 2							
1273+86	TO	1282+55	1740.8				
PERMANENT MARKINGS							
1273+86	TO	1282+55			1956	1956	4
TOTAL			3481.6	24	1956	1956	4
ADJUSTED TOTAL			3482	24	1956	1956	4

EROSION CONTROL SCHEDULE

LOCATION				TEMPORARY DITCH CHECKS	PERIMETER EROSION BARRIER	INLET FILTERS
				28000305	28000400	28000510
IL 29			LOCATION	(FOOT)	(FOOT)	(EACH)
STATION	TO	STATION	LT/RT			
1278+25.0	TO	1280+25.0	RT	108.0		
1275+50.0	TO	1277+19.9	LT		170.0	
1275+50.0	TO	1276+59.6	RT		125.0	
1277+42.9	TO	1277+46.4	RT		20.0	
1278+98.6	TO	1280+40.0	LT		142.0	
1277+19			LT			1.0
1277+19			RT			1.0
1278+65			LT			1.0
1278+65			RT			1.0
TOTAL				108.0	457.0	4.0
ADJUSTED TOTAL				108	457	4

RIPRAP AND PIPE SCHEDULE

LOCATION				STONE RIPRAP, CLASS A4	FILTER FABRIC	PIPE ELBOW, 12"	METAL FLARED END SECTIONS 12"	PIPE DRAINS 12"	CONCRETE THRUST BLOCKS	TYPE F INLET BOX, STANDARD 610001
				28100107	28200200	54210182	54262712	60100945	61000050	61000225
IL 29			LOCATION	SQ YD	SQ YD	EACH	EACH	FOOT	EACH	EACH
STATION	TO	STATION	LT/RT							
1277+40	TO	1278+18	RT	167.4	167.4					
1277+19			LT			2.0	1.0	11.0	1.0	1.0
1277+19			RT			2.0	1.0	17.0	1.0	1.0
1278+65			LT			2.0	1.0	11.0	1.0	1.0
1278+65			RT			2.0	1.0	17.0	1.0	1.0
TOTAL				167.4	167.4	8.0	4.0	56.0	4.0	4.0
ADJUSTED TOTAL				167.4	167.4	8	4	56	4	4

MODEL: SCH 4 [Sheet]
FILE NAME: c:\bms\kog-pw-01\new user\dms25419\D468E33-sht-Schedule.dgn

Kaskaskia Engineering Group, LLC
PROFESSIONAL REGISTRATIONS: Illinois Professional Design Firm, Professional Engineering Group
LICENSE NO. 184.001733, 20-5106586
200 E. Main St., Suite 101, Belleville, Illinois 62220; 618.233.8877 phone; 618.233.8877 fax; www.kaskaskiaeng.com

USER NAME = rjo	DESIGNED - RJO	REVISED -	
	DRAWN - RJO	REVISED -	
	CHECKED - EJL	REVISED -	
PLOT DATE = 9/26/2025	DATE -	REVISED -	

STATE OF ILLINOIS
DEPARTMENT OF TRANSPORTATION

SCHEDULE OF QUANTITIES
IL 29 OVER BARRVILLE CREEK

SCALE: | SHEET 4 OF 4 SHEETS | STA. | TO STA.

F.A.P. RTE.	SECTION	COUNTY	TOTAL SHEETS	SHEET NO.
318	(3-B)BR	MARSHALL	72	15

CONTRACT NO. 68E33

ILLINOIS | FED. AID PROJECT

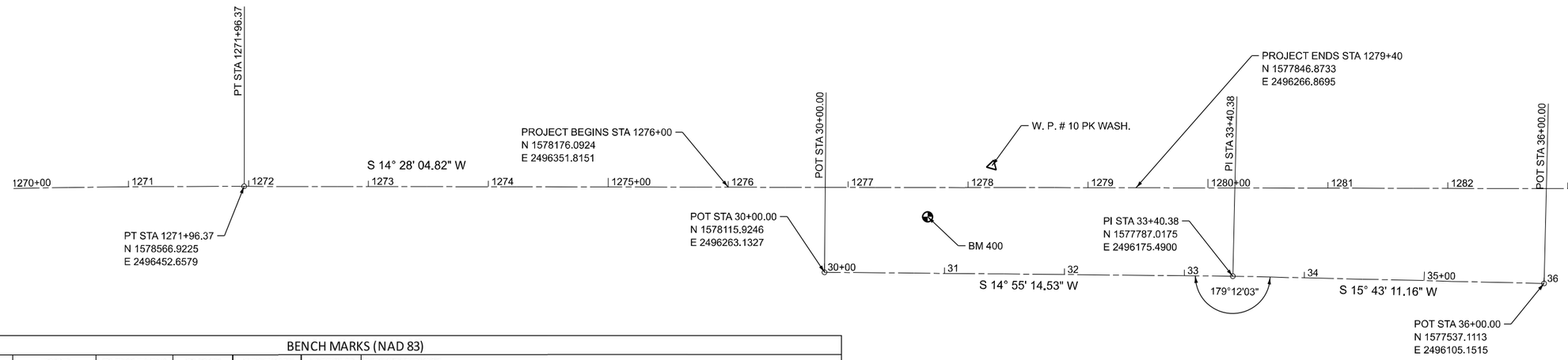

BENCH MARKS (NAD 83)							
POINT	NORTH	EAST	ELEVATION	CHAIN	STATION	OFFSET	DESCRIPTION
IK096	1589154.229	2497491.585	468.99	IL29			SPIRE IN VAULT @ NE QUAD OF IL29 & IL17
BM101			466.951	IL29	1209+35 +/-	37.6' RT	SET CHIS. SQUARE IN TOP CENTER OF DROP BOX INLET HDWL @ PAVT.
BM102			467.722	IL29	1247+97 +/-	33.0' RT	SET CHIS. SQUARE IN TOP OF HDWL @ PAVT. 33' +/- OF BRASS DISK ON CL
BM400	1578021.195	2496286.603	466.860	IL29	1277+61 +/-	24.5'+/-RT	FOUND BRASS DISK IN NW WING WALL OF BRIDGE STRUCT. #062-0008
							INCORRECTLY STAMED "F318, 1272+92" @ PAVT.

HORIZONTAL CONTROL POINTS (NAVD 88)							
POINT	NORTH	EAST	ELEVATION	CHAIN	STATION	OFFSET	DESCRIPTION
WP10	1577958.556	2496314.573	467.479	IL29	1278+19.9	18.15' LT	SET PK/WASH.
WP11	1577164.656	2496063.100	472.575	IL29	1286+51.50	27.4' RT	SET 5/8" ROD W/ YC (D4-IDOT)

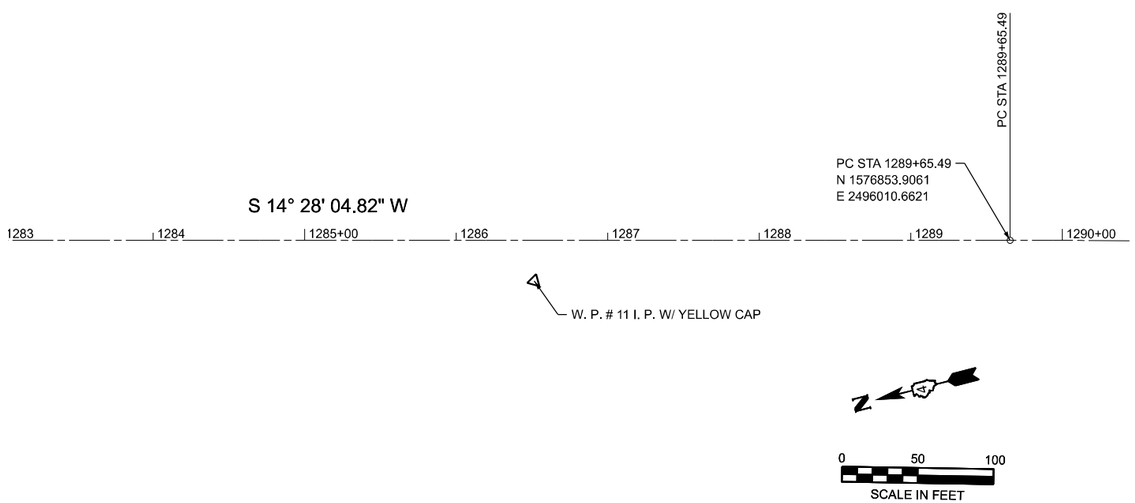

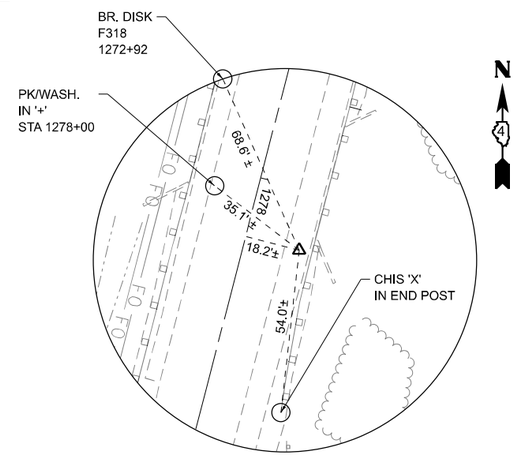

HORIZONTAL CONTROL
POINT NO. 10
STA 1278+19.9, 18.15' ± RT
W. P. #10 PK IN ASPH. SHOULDER

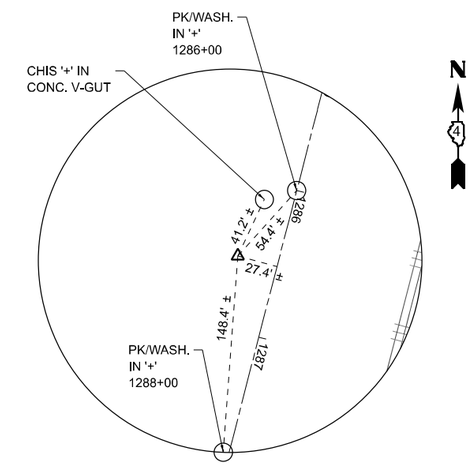

HORIZONTAL CONTROL
POINT NO. 11
STA 1286+51.50, 27.4' ± RT
W. P. #11 I.P. W/ YELLOW CAP

LEGEND:

- BENCHMARK (BM) LOCATION
- HORIZONTAL CONTROL POINT (HCP) LOCATION

NOTES:

THE CONTRACTOR SHALL BE RESPONSIBLE FOR SETTING ADDITIONAL CONTROL POINTS AND BENCHMARKS SHOULD THE ONES PROVIDED BE LOST OR DESTROYED DURING CONSTRUCTION ACTIVITIES.

MODEL: ExCL - IL29_ML_1 [Sheet]
FILE NAME: c:\pmskeg-pw-01\new user\dms25419\D468E33-sht-ATB.dgn

Kaskaskia Engineering Group, LLC
209 E. Main St., Suite 100, Belleville, Illinois 62220
618.233.3877 phone
618.233.3977 fax
www.kaskaskiaeng.com
PROFESSIONAL REGISTRATIONS: Illinois Professional Design Firm, Professional Engineering Group
LICENSE NO.: 184.001771, 20-5300586

USER NAME = rjo	DESIGNED - RJO	REVISED -	
	DRAWN - RJO	REVISED -	
	CHECKED - EJL	REVISED -	
PLOT DATE = 10/1/2025	DATE -	REVISED -	

STATE OF ILLINOIS
DEPARTMENT OF TRANSPORTATION

ALIGNMENT, TIES, AND BENCHMARKS
IL 29 OVER BARRVILLE CREEK

SCALE: | SHEET 1 OF 1 SHEETS | STA. | TO STA.

F.A.P. RTE.	SECTION	COUNTY	TOTAL SHEETS	SHEET NO.
318	(3-B)BR	MARSHALL	72	16
		CONTRACT NO. 68E33		
	ILLINOIS	FED. AID PROJECT		

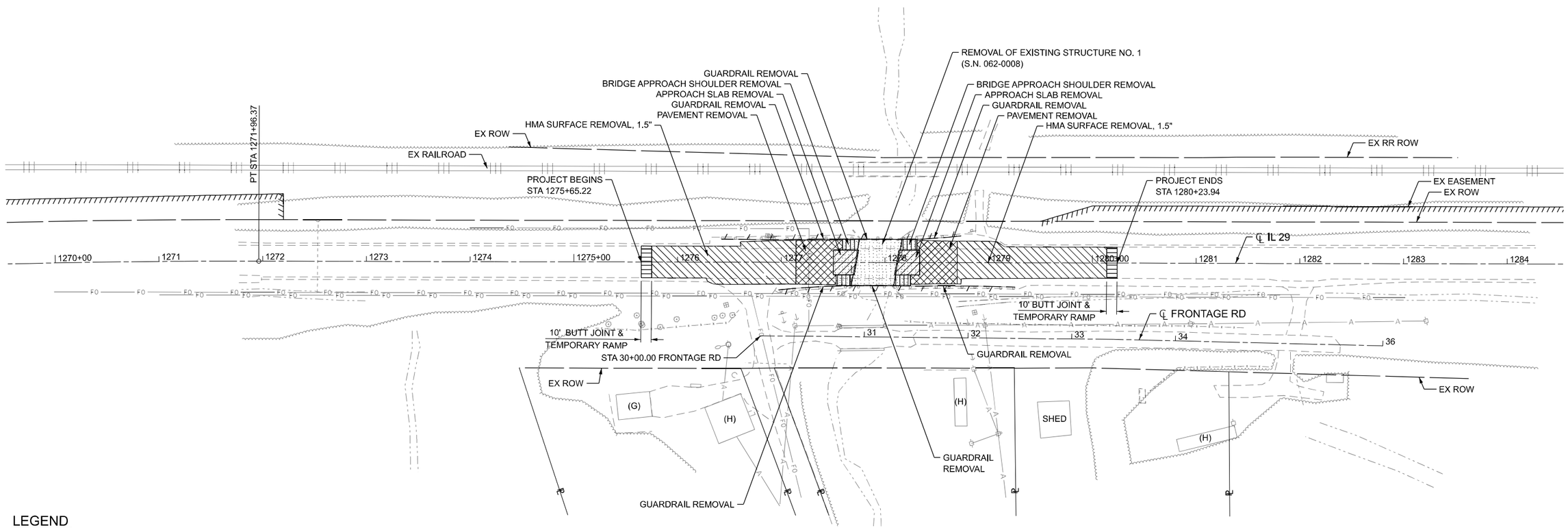

LEGEND

- LINEAR REMOVAL (ITEM NOTED)
- HMA SURFACE REMOVAL, 1.5"
- BUTT JOINT & TEMPORARY RAMP
- PAVEMENT REMOVAL
- BRIDGE APPROACH SHOULDER REMOVAL
- APPROACH SLAB REMOVAL
- REMOVAL OF EXISTING STRUCTURES

MODEL: ExCL - Removal [Sheet]
FILE NAME: c:\bms\keg-pw-01\new user\dms25419\D468E33-sht-Rem.dgn

Kaskaskia Engineering Group, LLC
PROFESSIONAL REGISTRATIONS
Illinois Professional Design Firm 184.001733
Professional Engineering Group LICENSE NO. 20-5106586
200 E. Main St., Suite 300
Belleville, Illinois 62220
618.233.8977 phone
618.233.8978 fax
www.kaskaskiaeng.com

USER NAME = rjo	DESIGNED - RJO	REVISED -	
	DRAWN - RJO	REVISED -	
	CHECKED - EJL	REVISED -	
PLOT DATE = 12/3/2025	DATE -	REVISED -	

STATE OF ILLINOIS
DEPARTMENT OF TRANSPORTATION

REMOVAL PLAN
IL 29 OVER BARRVILLE CREEK

SCALE: SHEET 1 OF 1 SHEETS STA. TO STA.

F.A.P. RTE.	SECTION	COUNTY	TOTAL SHEETS	SHEET NO.
318	(3-B)BR	MARSHALL	72	17

CONTRACT NO. 68E33

ILLINOIS | FED. AID PROJECT

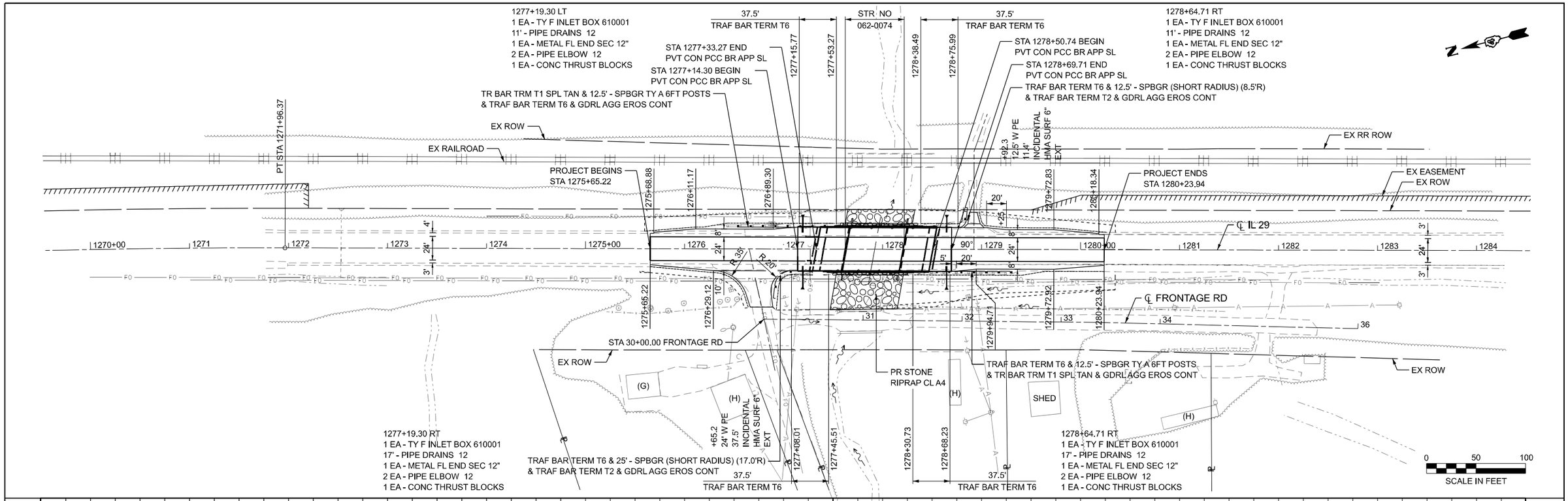

MODEL: IL29 PR CL - IL29 Plan Profile 5 [Sheet]
FILE NAME: c:\bms\keg-pw-01\new user\dms25419\D468E33-sht-PlanProf.dgn

Kaskaskia Engineering Group, LLC
PROFESSIONAL REGISTRATIONS
Illinois Professional Design Firm
Professional Engineering Group
LICENSE NO.
184.001753
20-5300595

USER NAME = rjo	DESIGNED - RJO	REVISED -	
	DRAWN - RJO	REVISED -	
	CHECKED - EJL	REVISED -	
PLOT DATE = 12/1/2025	DATE -	REVISED -	

STATE OF ILLINOIS
DEPARTMENT OF TRANSPORTATION

PLAN AND PROFILE - IL 29
IL 29 OVER BARRVILLE CREEK

SCALE: SHEET 1 OF 1 SHEETS STA. TO STA.

F.A.P. RTE.	SECTION	COUNTY	TOTAL SHEETS	SHEET NO.
318	(3-B)BR	MARSHALL	72	18
		CONTRACT NO. 68E33		
		ILLINOIS	FED. AID PROJECT	

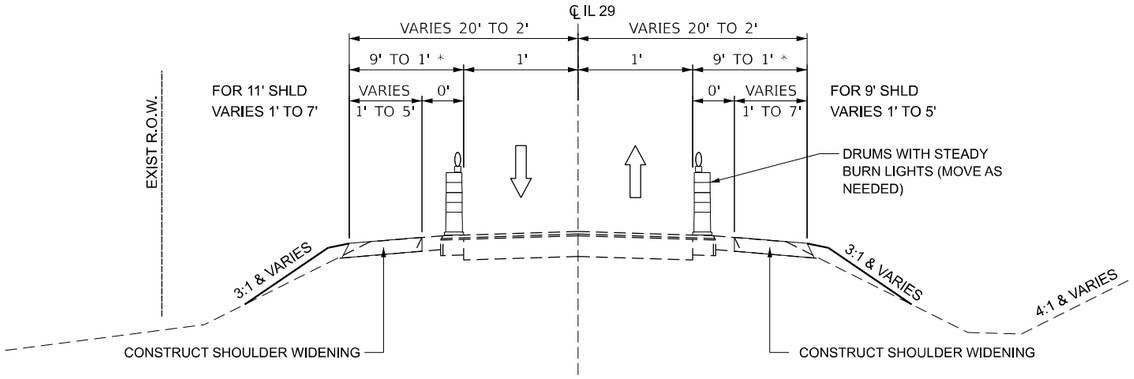

* SEE PLANS FOR LOCATION

TYPICAL SECTION - IL 29
PRE-STAGE
STA 1273+86.63 TO STA 1281+44.25
MAINTAIN TRAFFIC ON IL 29

SEE STANDARD DETAIL
701006, 701011 & 701326

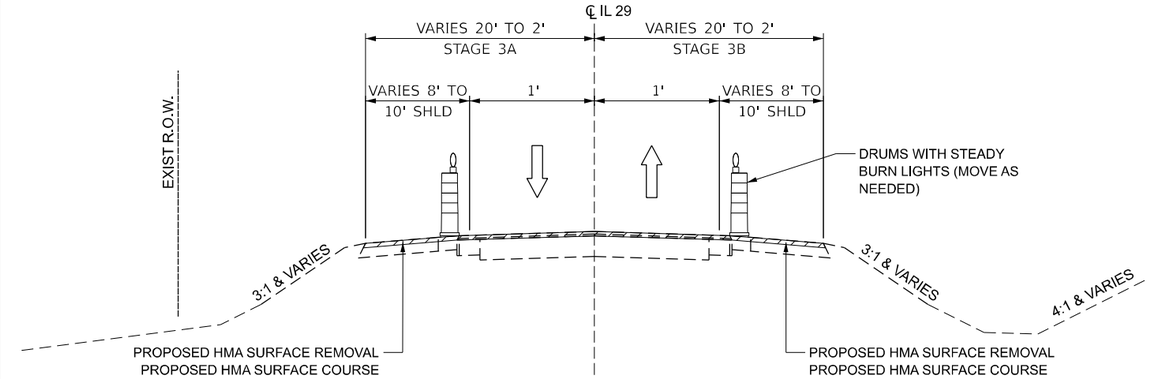

TYPICAL SECTION - IL 29
STAGE 3
STA 1273+86.63 TO STA 1281+44.25
SHIFT TRAFFIC AS NEEDED WHILE UTILIZING TEMPORARY SIGNALS AND FLAGGERS

SEE STANDARD DETAIL
701006, 701011 & 701326

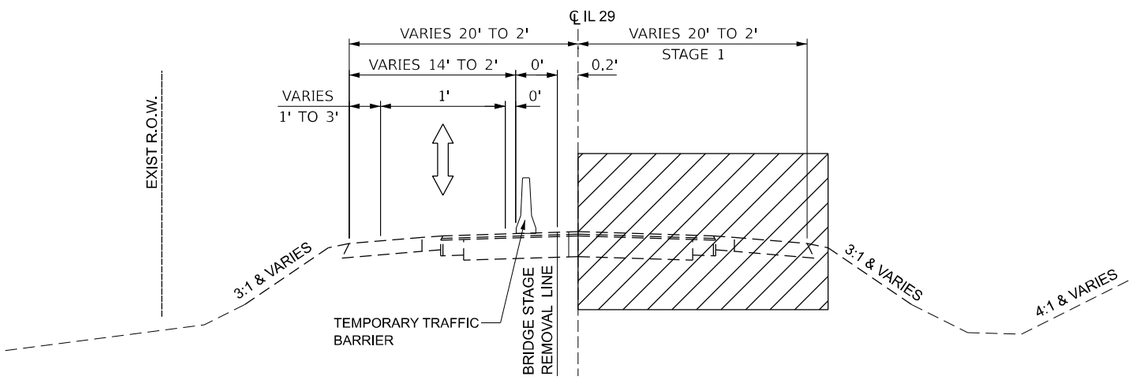

TYPICAL SECTION - IL 29
STAGE 1
STA 1273+86.63 TO STA 1281+44.25
SHIFT TRAFFIC TO NB LANE UTILIZING TEMPORARY SIGNALS

SEE STANDARD DETAIL
701321

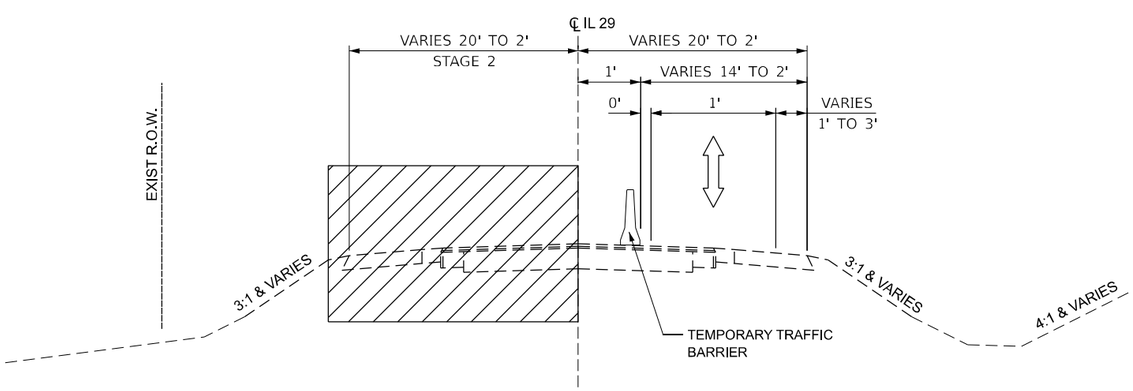

TYPICAL SECTION - IL 29
STAGE 2
STA 1273+86.63 TO STA 1281+44.25
SHIFT TRAFFIC TO SB LANE UTILIZING TEMPORARY SIGNALS

SEE STANDARD DETAIL
701321

CONSTRUCTION NOTES:

PRE-STAGE (ONE SIDE OF ROADWAY AT A TIME)
1. PLACE TRAFFIC CONTROL AS NEEDED.
2. SAWCUT STRAIGHT EDGE ALONG EXISTING PAVED SHOULDER. REMOVE & CONSTRUCT/WIDEN SHOULDERS WITH PERMANENT SHOULDER.

STAGE 1
1. PLACE TRAFFIC CONTROL DEVICES AND TEMPORARY TRAFFIC BARRIER AS SHOWN & ROUTE TRAFFIC ONTO PAVEMENT PLACED IN THE PRE-STAGE.
2. REMOVE EXISTING BRIDGE & BRIDGE APPROACH SLAB TO STAGE LINE.
3. CONSTRUCT ONE HALF OF BRIDGE, BRIDGE APPROACH, & PAVEMENT CONNECTOR FOR BRIDGE APPROACH.

STAGE 2
1. RELOCATE TRAFFIC CONTROL DEVICES AND TEMPORARY TRAFFIC BARRIER AS SHOWN & RE-ROUTE TRAFFIC ONTO BRIDGE & PAVEMENT PLACED IN THE PRE-STAGE & STAGE 1.
2. REMOVE REMAINING EXISTING BRIDGE & BRIDGE APPROACH SLAB TO STAGELINE.
3. CONSTRUCT REMAINING HALF OF BRIDGE, BRIDGE APPROACH, & PAVEMENT CONNECTOR FOR BRIDGE APPROACH.

STAGE 3
1. REMOVE TEMPORARY TRAFFIC BARRIER & RELOCATE TRAFFIC CONTROL DEVICES.
2. CONSTRUCT DRIVEWAY CONNECTIONS .
3. MILL IL 29 ONE LANE AT A TIME (2" MAX DROP ALLOWED BETWEEN LANES)
4. RESURFACE IL 29.

MAINTENANCE OF TRAFFIC GENERAL NOTES:

1. TRAFFIC CONTROL PLANS AS PRESENTED HERE CONSTITUTE A SUGGESTED SEQUENCE OF OPERATIONS AND ARE INTENDED TO SERVE AS A GUIDE FOR SAFE DIVERSION OF TRAFFIC DURING EXECUTION OF THIS CONTRACT. THE CONTRACTOR MAY RECOMMEND A NEW PLAN OR PROPOSE CHANGES TO THE ASPECTS OF THE PLAN BUT NOT AT THE EXPENSE OF PUBLIC SAFETY OR CONVENIENCE. ANY PROPOSED MODIFICATION OF THE PLANS SHALL BE SUBMITTED IN ADVANCE FOR THE WRITTEN APPROVAL OF THE ENGINEER.
2. ALL TRAFFIC CONTROL SIGNS AND DEVICES SHALL CONFORM TO THE TRAFFIC CONTROL PLANS AND THE LATEST EDITION OF THE "MANUAL ON UNIFORM TRAFFIC CONTROL DEVICES FOR STREETS AND HIGHWAYS" AND SHALL BE IN PLACE BEFORE CONSTRUCTION BEGINS.
3. TEMPORARY RAMPS MAY BE NECESSARY TO TRANSITION THE EXISTING PAVEMENT ELEVATION TO THE PROPOSED PAVEMENT ELEVATION AT SEVERAL LOCATIONS OF THE VARIOUS STAGES OF THE SUGGESTED MAINTENANCE OF TRAFFIC. THIS WORK WILL NOT BE PAID FOR SEPARATELY, BUT SHALL BE INCLUDED IN THE CONTRACT ITEMS OF WORK.

TEMPORARY CONCRETE BARRIER (TCB) SHALL BE PINNED WHEN:

1. PLACED SUCH THAT THE DISTANCE FROM BACK OF THE TCB TO THE EDGE OF AN UNCOMPLETED BRIDGE DECK OR APPROACH SLAB IS LESS THAN 37 IN.
2. ANY FIXED OBJECT EXISTS WITHIN A RECTANGLE 24 IN. BEHIND THE BASE OF A TCB, AND WITHIN 78 IN. ABOVE THE BOTTOM ELEVATION OF THE TCB.
3. ANY DROP-OFF OF MORE THAN 2 IN. IS LOCATED:
   FROM 6 IN. TO 12 IN. (INCLUSIVE) FROM THE BACK OF THE TCB.
   FROM 12 IN. TO 24 IN. (INCLUSIVE) FROM THE BACK OF THE TCB, SUBJECT TO RESULTS A RISK ASSESSMENT.
   FROM 24 IN. TO 37 IN. (INCLUSIVE) FROM THE BACK OF THE TCB,

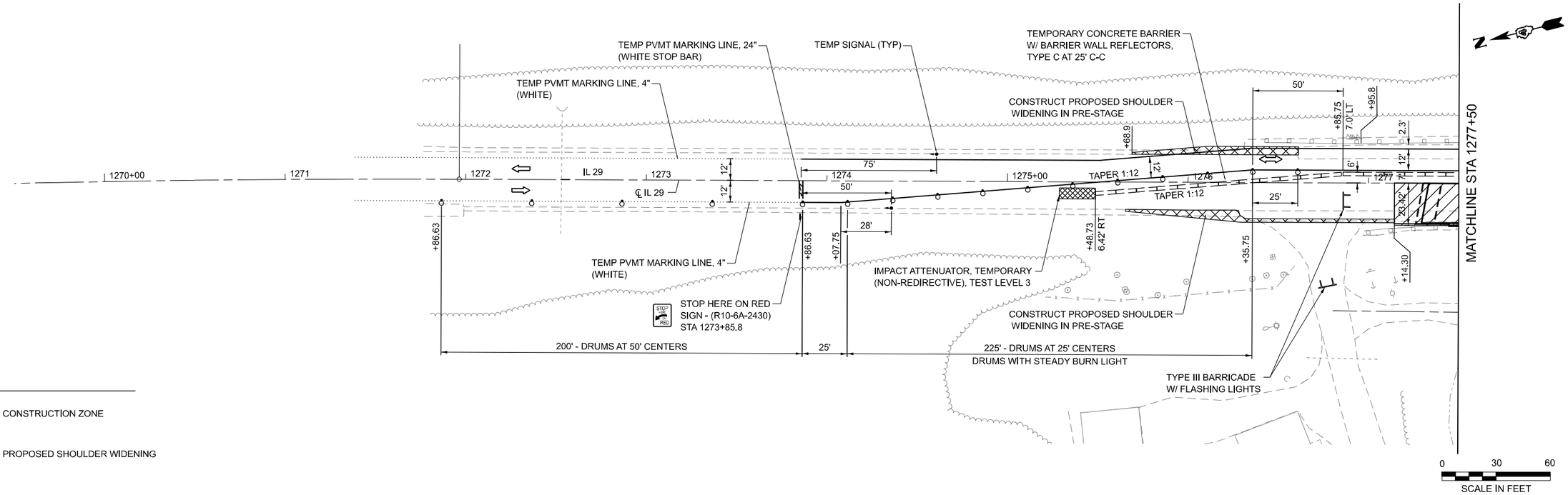

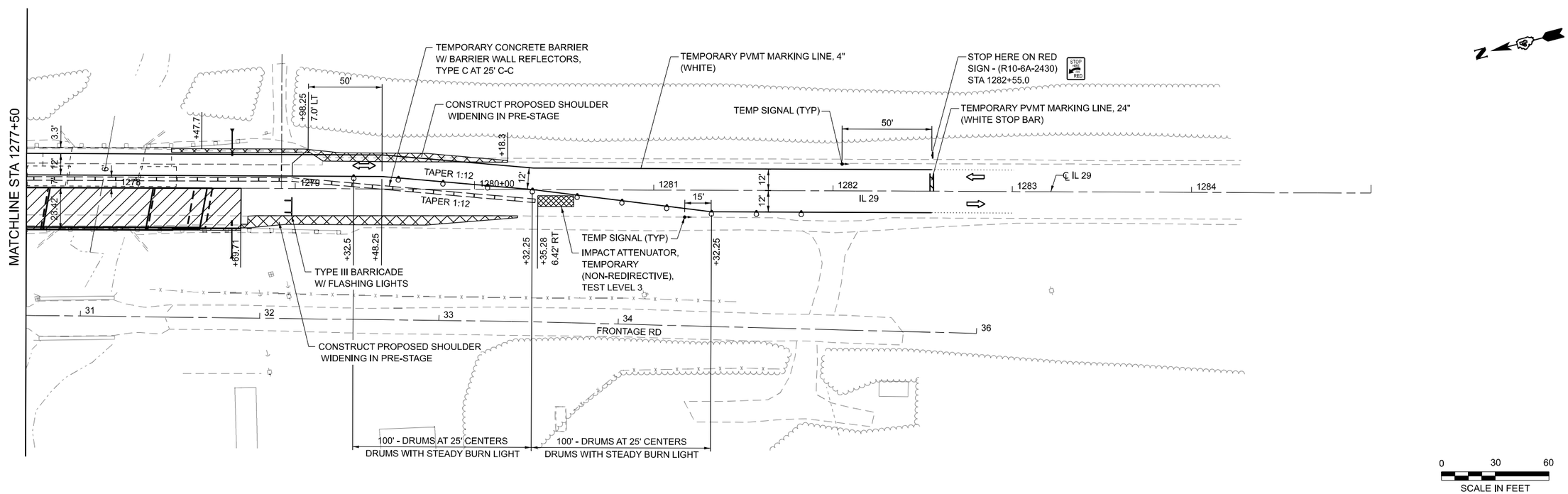

MODEL: IL29 CL - MOT Stage 1 Plans 04.17 [Sheet]
FILE NAME: c:\bms\keg-pw-01\new user\dms25419\D468E33-sht-MOT-1.dgn

Kaskaskia Engineering Group, LLC
PROFESSIONAL REGISTRATIONS
Illinois Professional Design Firm: 184.004773
Professional Engineering Group: 20-5300386
208 E. Main St., Suite 300
Belleville, Illinois 62220
618.233.8877 phone
618.233.8877 fax
www.kaskaskiaeng.com

USER NAME = rjo	DESIGNED - RJO	REVISED -	
	DRAWN - RJO	REVISED -	
	CHECKED - EJL	REVISED -	
PLOT DATE = 12/1/2025	DATE -	REVISED -	

STATE OF ILLINOIS
DEPARTMENT OF TRANSPORTATION

SUGGESTED MAINTENANCE OF TRAFFIC - STAGE 1
IL 29 OVER BARRVILLE CREEK

SCALE: SHEET 2 OF 4 SHEETS STA. TO STA.

F.A.P. RTE.	SECTION	COUNTY	TOTAL SHEETS	SHEET NO.
318	(3-B)BR	MARSHALL	72	20
		CONTRACT NO. 68E33		
		ILLINOIS	FED. AID PROJECT	

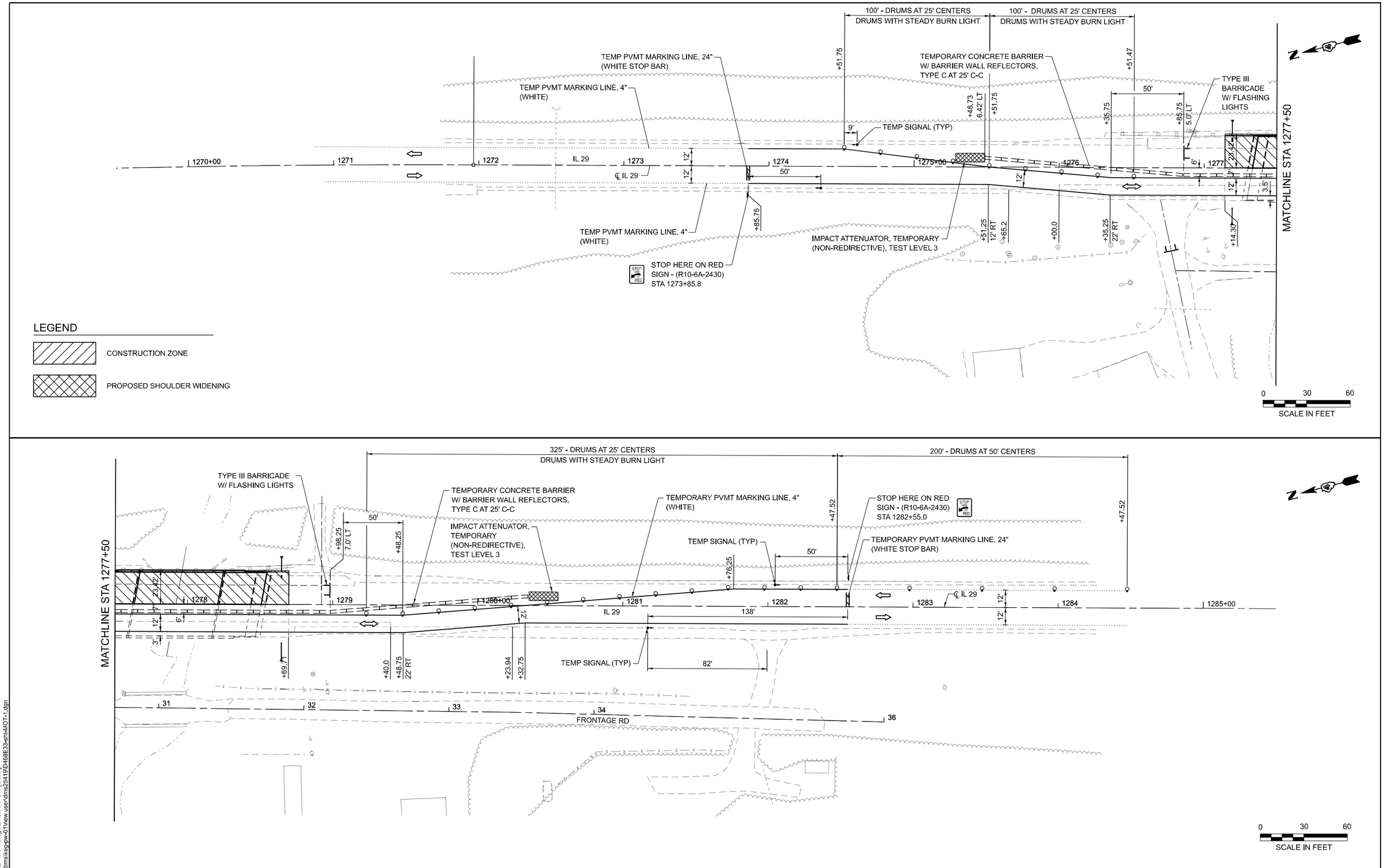

MODEL: IL29 CL - MOT Stage 2 Plans 04.17 [Sheet]
FILE NAME: c:\bms\keg-pw-311\new user\dms25419\D468E33-sht-MOT-1.dgn

Kaskaskia Engineering Group, LLC
PROFESSIONAL REGISTRATIONS
Illinois Professional Design Firm: 184.004773
Professional Engineering Group: 20-5300386
200 E. Main St., Suite 300
Belleville, Illinois 62220
618.233.8877 phone
618.233.8877 fax
www.kaskaskiaeng.com
LICENSED NO.

USER NAME = rjo	DESIGNED - RJO	REVISED -	
	DRAWN - RJO	REVISED -	
	CHECKED - EJL	REVISED -	
PLOT DATE = 12/1/2025	DATE -	REVISED -	

STATE OF ILLINOIS
DEPARTMENT OF TRANSPORTATION

SUGGESTED MAINTENANCE OF TRAFFIC - STAGE 2
IL 29 OVER BARRVILLE CREEK

SCALE: SHEET 3 OF 4 SHEETS STA. TO STA.

F.A.P. RTE.	SECTION	COUNTY	TOTAL SHEETS	SHEET NO.
318	(3-B)BR	MARSHALL	72	21
		CONTRACT NO. 68E33		
		ILLINOIS	FED. AID PROJECT	

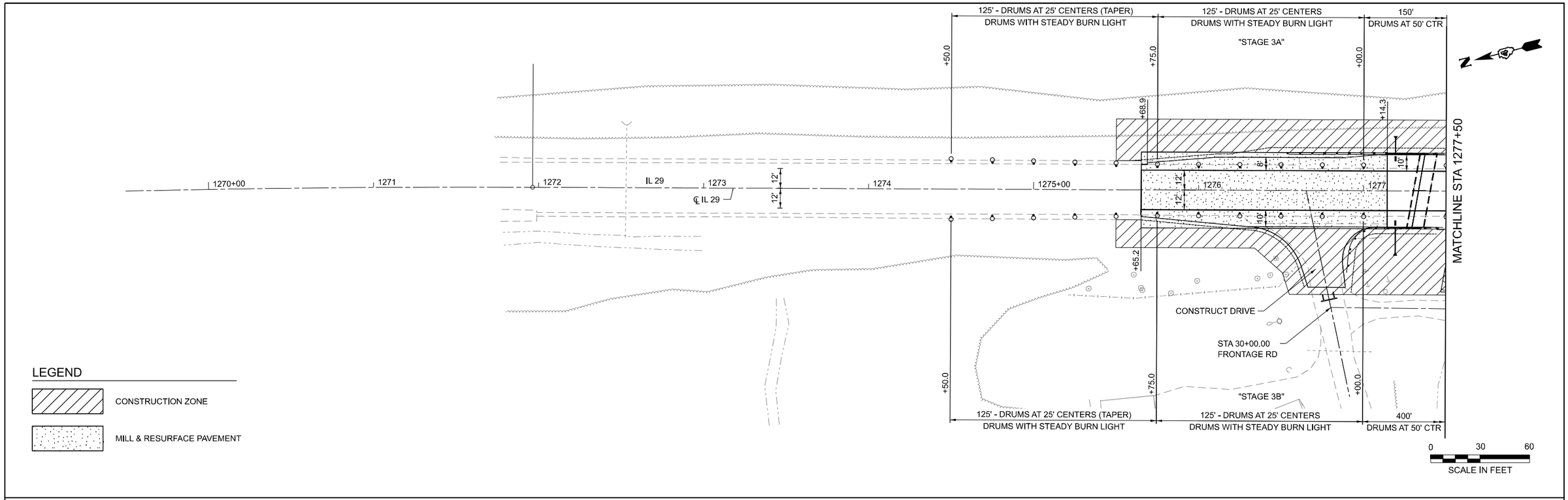

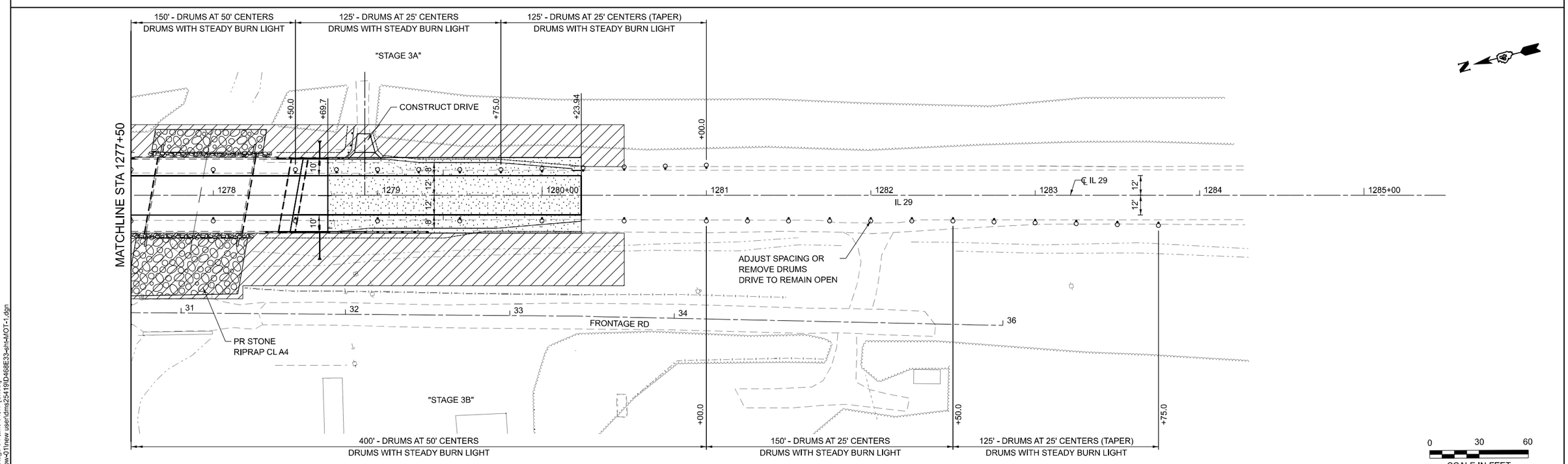

MODEL: IL29 CL - MOT Stage 3 Plans (04.17 [Sheet]
FILE NAME: c:\bms\keg-pw-01\new user\dms25419\D468E33-sht-MOT-1.dgn

Kaskaskia Engineering Group, LLC
PROFESSIONAL REGISTRATIONS: Illinois Professional Design Firm; Professional Engineering Group
LICENSE NO. 184.001771; 20-5006505
208 E. Main St., Suite 100, Belleville, Illinois 62220; 618.233.8877 phone; 618.233.3977 fax; www.kaskaskiaeng.com

USER NAME = rjo	DESIGNED - RJO	REVISED -	
	DRAWN - RJO	REVISED -	
	CHECKED - EJL	REVISED -	
PLOT DATE = 12/1/2025	DATE -	REVISED -	

STATE OF ILLINOIS
DEPARTMENT OF TRANSPORTATION

SUGGESTED MAINTENANCE OF TRAFFIC - STAGE 3
IL 29 OVER BARRVILLE CREEK

SCALE: | SHEET 4 OF 4 SHEETS | STA. | TO STA.

F.A.P. RTE.	SECTION	COUNTY	TOTAL SHEETS	SHEET NO.
318	(3-B)BR	MARSHALL	72	22

CONTRACT NO. 68E33

ILLINOIS | FED. AID PROJECT

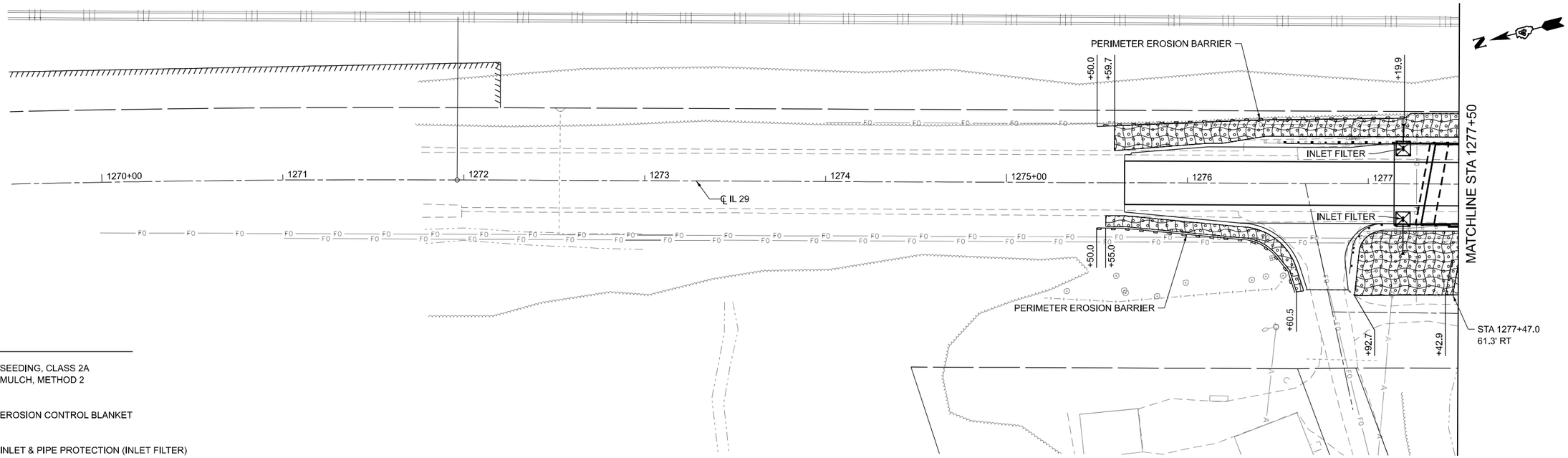

LEGEND

- SEEDING, CLASS 2A MULCH, METHOD 2
- EROSION CONTROL BLANKET
- INLET & PIPE PROTECTION (INLET FILTER)

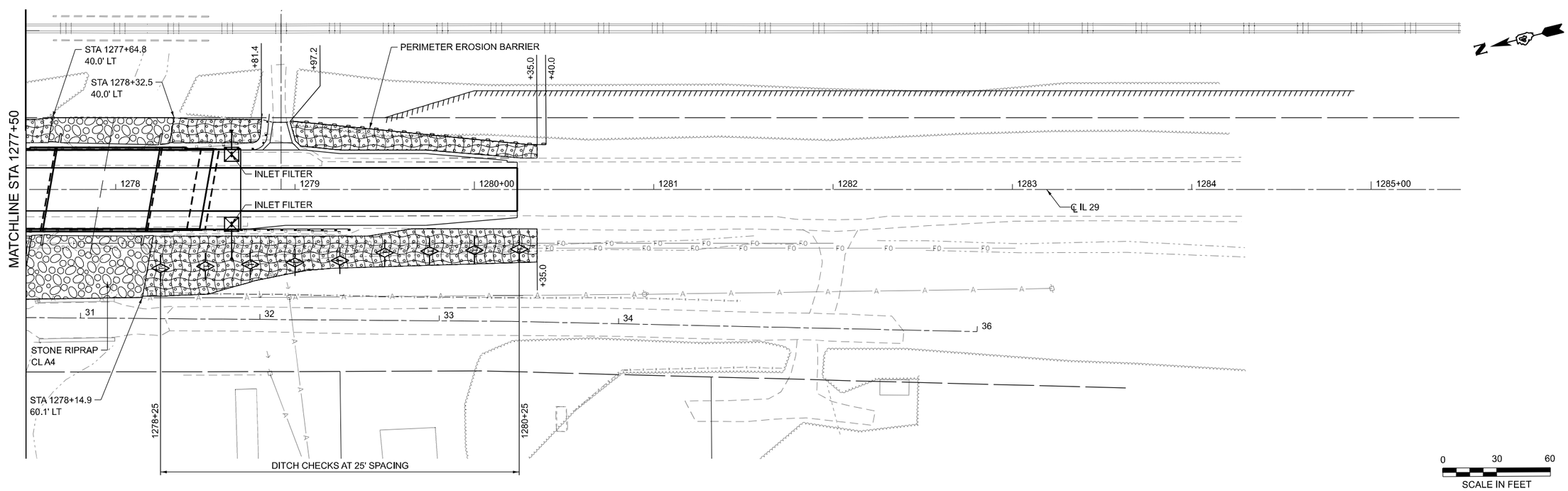

MODEL: ExCL - Plan 1 [Sheet]
FILE NAME: c:\bms\keg-pw-01\new user\dms25419\D468E33-SHT-ESC.dgn

Kaskaskia Engineering Group, LLC
PROFESSIONAL REGISTRATION
Illinois Professional Design Firm 184.004793
Professional Engineering Group 20-5300586
208 E. Main St., Suite 300
Belleville, Illinois 62220
618.233.8977 Phone
618.233.8977 Fax
www.kaskaskiaeng.com

USER NAME = rjo	DESIGNED - RJO	REVISED -	
	DRAWN - RJO	REVISED -	
	CHECKED - EJL	REVISED -	
PLOT DATE = 10/1/2025	DATE -	REVISED -	

STATE OF ILLINOIS
DEPARTMENT OF TRANSPORTATION

EROSION AND SEDIMENT CONTROL PLAN
IL 29 OVER BARRVILLE CREEK

SCALE: | SHEET 1 OF 1 SHEETS | STA. 1269+50.00 TO STA. 1285+50.00

F.A.P. RTE.	SECTION	COUNTY	TOTAL SHEETS	SHEET NO.
318	(3-B)BR	MARSHALL	72	23
		CONTRACT NO. 68E33		
		ILLINOIS	FED. AID PROJECT	

Benchmark: M-233 USC & GS East end of South Abutment Sta. 1278+16, 25' Rt, Elev. 468.06

Existing Structure: SN 062-0008 originally built in 1948 as Section 3-B. The existing single span, cast in place reinforced concrete T-beam superstructure is supported by closed abutments on pile-supported footings. The back-to-back abutments length is 40'-11½" with a 10° skew and face-to-face width between guardrails of 44'-8". Existing structure to be removed and replaced. Traffic to be maintained using stage construction.

No salvage.

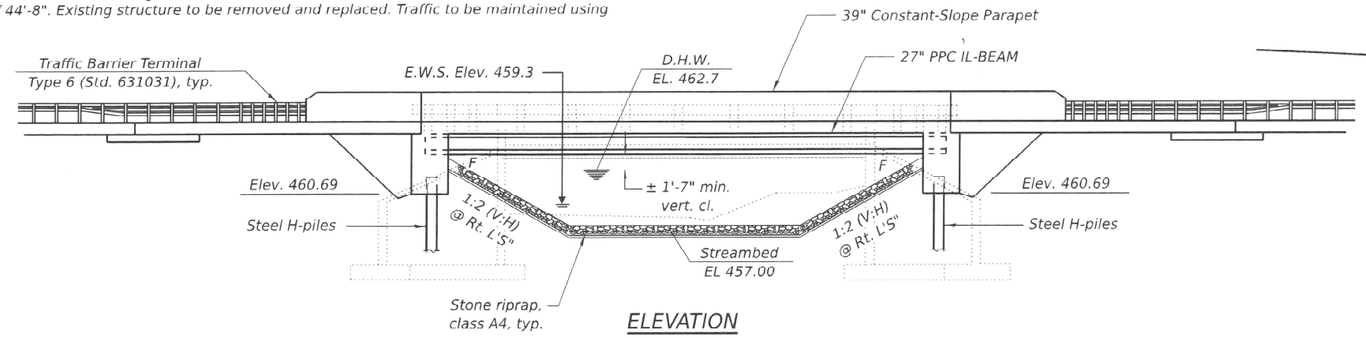

ELEVATION

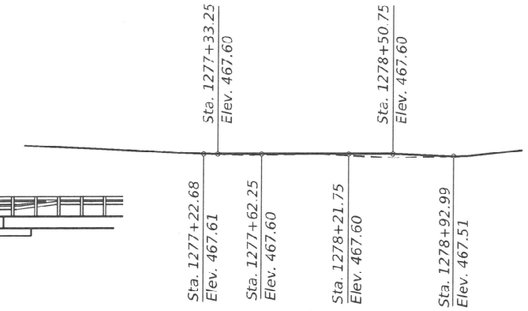

PROFILE GRADE

Along ℄ IL 29

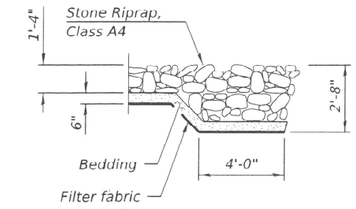

SECTION A-A

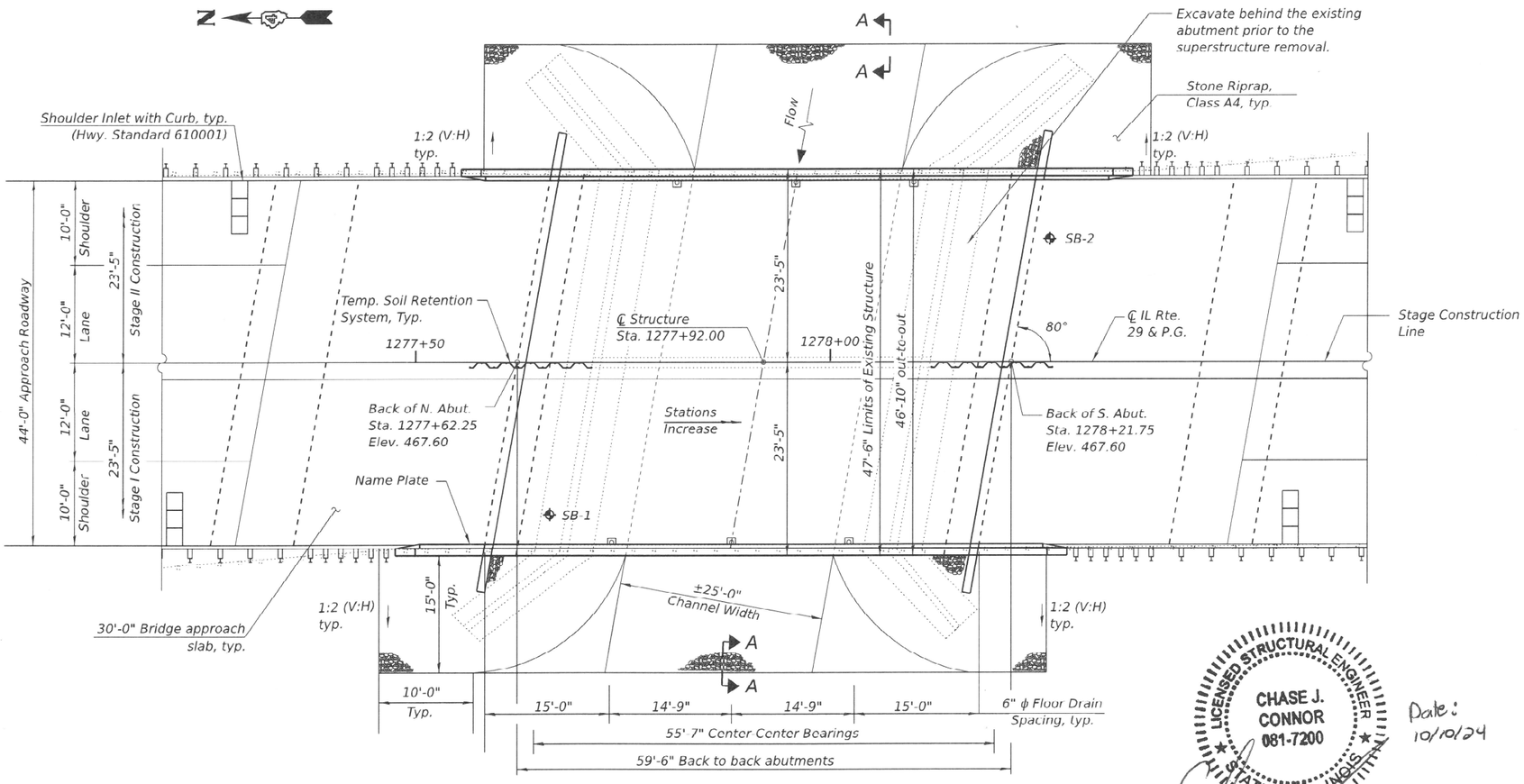

PLAN

DESIGN STRESSES

FIELD UNITS

f'c = 3,500 psi (Substructure)
f'c = 4,000 psi (Superstructure)
fy = 60,000 psi (Reinforcement)

PRECAST PRESTRESSED UNITS

f'c = 8,500 psi
f'ci = 6,500 psi
fpu = 270,000 psi (0.6" ∅ Low Relaxation Strands)
fpbt = 202,300 psi (0.6" ∅ Low Relaxation Strands)

DESIGN SPECIFICATIONS

2020 AASHTO LRFD Bridge Design Specifications, 9th Edition

LOADING HL-93

Allow 50#/sq. ft. for future wearing surface.

SEISMIC DATA

Seismic Performance Zone (SPZ) = 1
Design Spectral Acceleration at 1.0 sec. (SD1) = 0.105g
Design Spectral Acceleration at 0.2 sec. (SDS) = 0.165g
Soil Site Class = D

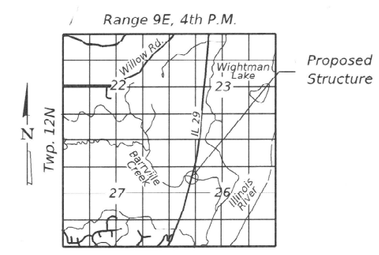

LOCATION SKETCH

LICENSED STRUCTURAL ENGINEER
CHASE J. CONNOR
081-7200
STATE OF ILLINOIS

Date: 10/10/24

CHASE CONNOR, P.E., S.E.
ILLINOIS STRUCTURAL NO. 7200
EXPIRES: NOVEMBER 30, 2024

APPROVED
For Structural Adequacy Only

Engineer of Bridges & Structures

GENERAL PLAN & ELEVATION
IL 29 OVER BARRVILLE CREEK
F.A.P. RTE. 318 - SEC. (3-B) BR
MARSHALL COUNTY
STATION 1277+92.00
STRUCTURE NO. 062-0074

Hurst-Rosche, Inc.
PROFESSIONAL DESIGN NUMBER: 184-000596
1400 E. TREMONT ST.
HILLSBORO, IL
PH: 217.532.3959
JOB NO. 192-1373

USER NAME =	DESIGNED - JJC	REVISED -	
	CHECKED - CJC	REVISED -	
PLOT SCALE =	DRAWN - AE	REVISED -	
PLOT DATE =	CHECKED - JJC	REVISED -	

STATE OF ILLINOIS
DEPARTMENT OF TRANSPORTATION

STRUCTURE NO. 062-0074

SHEET 1 OF 24 SHEETS

F.A.P. RTE.	SECTION	COUNTY	TOTAL SHEETS	SHEET NO.
318	(3-B) BR	MARSHALL	72	24
		CONTRACT NO. 68E33		
	ILLINOIS	FED. AID PROJECT		

MODEL: Default
FILE NAME: X:\Projects\Current\192-1373 IDOT D4 PTB193-024 W016 IL 29 over Barrville\DGN\D463E33-001-GP&E.dgn
10/10/2024 9:03:47 AM

GENERAL NOTES

1. Reinforcement bars designated (E) shall be epoxy coated.

2. Layout of slope protection system may be varied to suit ground conditions in the field as directed by the Engineer.

3. Excavation behind existing abutment walls shall be performed to balance front and back soil pressure before removing the existing superstructure. The Contractor shall sawcut the upper portion of the existing abutment at the Stage Removal Line before Stage I Removal to ensure the remaining portion will not be prematurely damaged.

4. The finishing machine rails shall be placed on the top of the top flange of the exterior beams within the deck pour. Beam blocks shall be placed between beams at all tie locations in each bay for the full width of the deck pour.

5. Plan dimensions and details relative to existing plans are subject to nominal construction variations. The Contractor shall field verify existing dimensions and details affecting new construction and make necessary approved adjustments prior to construction or ordering of materials. Such variations shall not be cause for additional compensation for a change in scope of the work, however, the Contractor will be paid for the quantity actually furnished at the unit price bid for the work.

6. The Contractor shall field verify the locations of existing utilities prior to construction. The Contractor shall take precautions not to damage exsiting utilities. Any such damage shall be repaired by the Contractor at no additonal cost to the Department.

7. Slipforming of the parapet is not allowed.

8. The Contractor shall stencil the structure number near the leading end of one of the parapet walls. The numbers shall be 2" tall and painted with black acrylic paint in the format "062-0074". This work shall be considered incidental.

INDEX OF SHEETS

1	General Plan and Elevation
2	General Data
3	Stage Construction Details
4	Temporary Soil Retention System
5	Temporary Concrete Barrier
6	Top of Slab Elevations Layout
7	Top of Slab Elevations
8	Top of North Approach Slab Elevations
9	Top of South Approach Slab Elevations
10	Superstructure Plan
11	Superstructure Details
12	Diaphragm Details
13	Bridge Approach Slab Details (Sheet 1 of 2)
14	Bridge Approach Slab Details (Sheet 2 of 2)
15	Framing Plan
16	Framing Details
17	IL27N Beam
18	IL27N Beam Details
19	North Abutment Details
20	South Abutment Details
21	HP Pile Details
22	Bar Splicer Assembly and Mechanical Splicer Details
23	Soil Boring Logs (Sheet 1 of 2)
24	Soil Boring Logs (Sheet 2 of 2)

TOTAL BILL OF MATERIAL

	ITEM	UNIT	SUPER	SUB	TOTAL
	Channel Excavation	Cu. Yd.		170	170
	Stone Riprap, Class A4	Sq. Yd.		912	912
	Filter Fabric	Sq. Yd.		912	912
	Removal of Existing Structures No. 1	Each	0.5	0.5	1
	Structure Excavation	Cu. Yd.		305	305
	Floor Drains	Each	6		6
	Concrete Structures	Cu. Yd.		83.7	83.7
	Concrete Superstructure	Cu. Yd.	115.9		115.9
	Concrete Encasement	Cu. Yd.		5.0	5.0
	Bridge Deck Grooving	Sq. Yd.	548		548
	Protective Coat	Sq. Yd.	654		654
	Concrete Superstructure (Approach Slab)	Cu. Yd.	128.0		128.0
	Furnishing and Erecting Precast Prestressed Concrete Beam, IL27N	Foot	341		341
	Reinforcement Bars, Epoxy Coated	Pound	79,110	8,300	87,410
	Bar Splicers	Each	506	26	532
	Furnishing Steel Piles HP12x63	Foot		431	431
	Driving Piles	Foot		431	431
	Test Pile Steel HP12x63	Each		1	1
	Pile Shoes	Each		12	12
	Name Plates	Each	1		1
	Temporary Soil Retention System	Sq. Ft.		209	209
	Granular Backfill for Structures	Cu. Yd.		129	129
	Geocomposite Wall Drain	Sq. Yd.		60	60
	Pipe Underdrains for Structures, 4"	Foot		96	96
*	Bar Terminator	Each	96	468	564

* Denotes Special Provision

WATERWAY INFORMATION

Drainage Area = 2.0 sq. mi.

Existing Overtopping Elev. =467.60 at Sta. 1277+92
Proposed Overtopping Elev. =467.60 at Sta. 1277+92

Flood Event	Freq. Yr.	Discharge Ft³/s	Waterway Opening Ft²		Natural H.W.E. ft.	Head - Ft.		Headwater El. Ft.	
			Exist.	Prop.		Exist.	Prop.	Exist.	Prop.
	10	1020	164	194	462.4	1.5	0.5	464.0	463.0
Design	50	1720	176	208	462.7	2.5	1.1	465.2	463.9
Base	100	2050	178	212	462.8	3.9	1.2	466.7	464.0
Scour Design Check	200	2250	178	214	462.8	4.8	2.8	467.6	465.6
Existing Overtopping	200	2250	178	NA	462.8	3.9	NA	466.7	NA
Max. Calc.	500	2870	203	244	463.5	4.4	3.8	467.8	467.2
Proposed Overtopping	500	2870	NA	244	463.5	NA	3.8	NA	467.2

10 Year velocity through existing bridge = 6.2 ft/s

10 Year velocity through proposed bridge = 5.3 ft/s

DESIGN SCOUR ELEVATION TABLE

Event / Limit State	Design Scour Elevations (ft)		
	N. Abut.	S. Abut.	Item 113
Q100	460.69	460.69	8
Q200	460.69	460.69	
Design	460.69	460.69	
Check	460.69	460.69	

STA. 1277+92.00
BUILT 202_ BY
STATE OF ILLINOIS
F.A.P. Rt. 318 Sec. (3-B) BR
LOADING HL-93
STR. NO. 062-0074

NAME PLATE

See Std. 515001

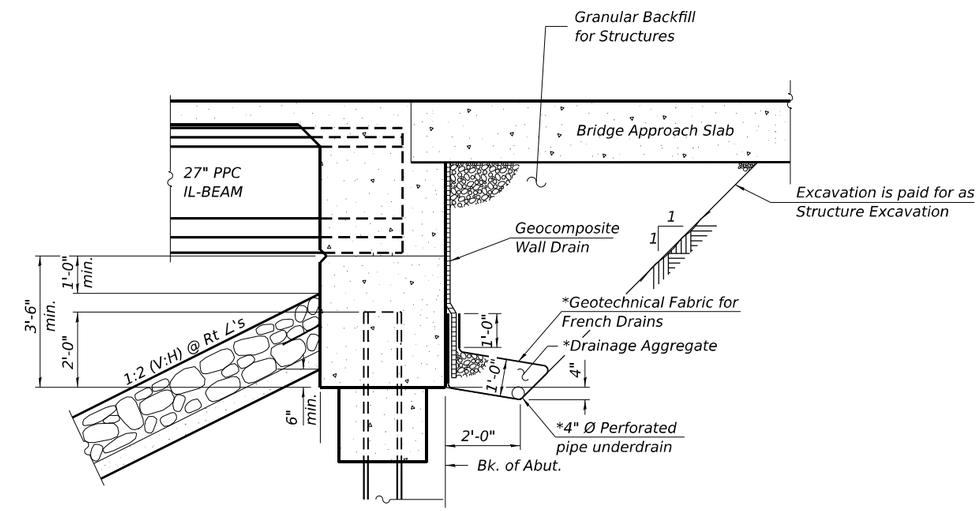

SECTION THRU INTEGRAL ABUTMENT

(Horiz. dim. @ Rt. ∠'s)

*Included in the cost of pipe underdrains for structure. (See Special Provisions)

Note: All drainage system components shall extend from 2'-0" from the end of each wingwall except an outlet pipe shall extend until intersecting with the side slopes. The pipes shall drain into concrete headwalls. (See Article 601.05 of the Standard Specifications and Highway Standards 6011011.)

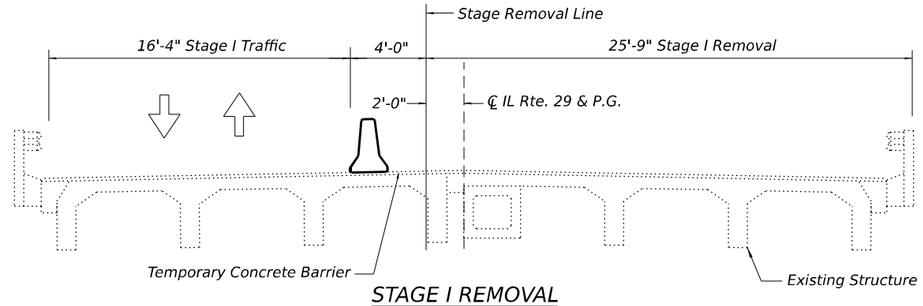

STAGE I REMOVAL

(Looking South)

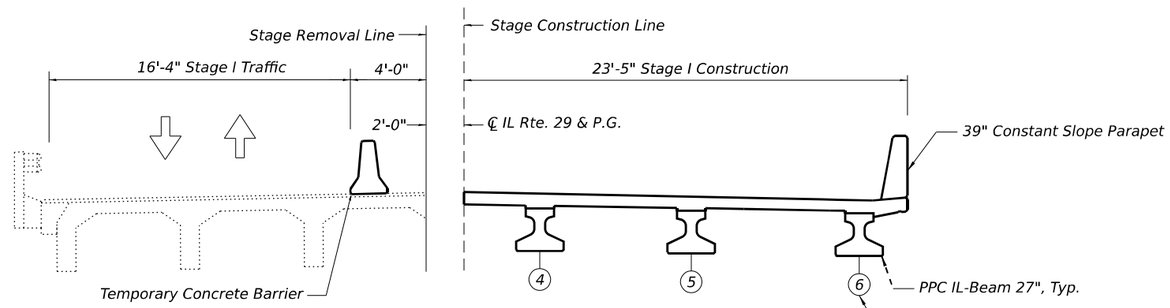

STAGE I CONSTRUCTION

(Looking South)

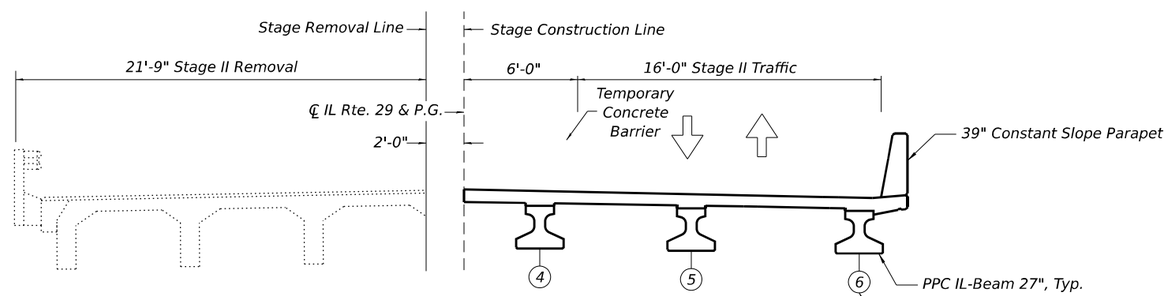

STAGE II REMOVAL

(Looking South)

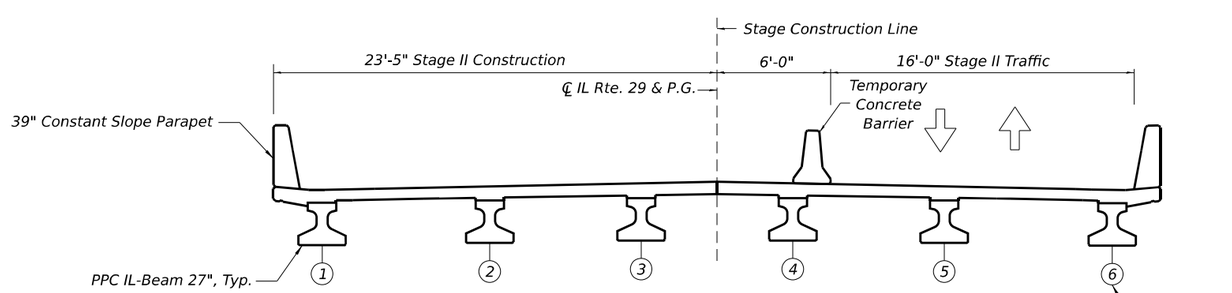

STAGE II CONSTRUCTION

(Looking South)

Note: For quantity of Temporary Roadway Barrier, see Roadway Plans

Hurst-Rosche, Inc.
PROFESSIONAL DESIGN NUMBER: 184-000298
1400 E. TREMONT ST.
HILLSBORO, IL
PH: 217,532.3959
JOB NO. 192-1373

USER NAME =	DESIGNED - JJC	REVISED -	
	CHECKED - CJC	REVISED -	
PLOT SCALE =	DRAWN - AE	REVISED -	
PLOT DATE =	CHECKED - JJC	REVISED -	

STATE OF ILLINOIS
DEPARTMENT OF TRANSPORTATION

STAGE CONSTRUCTION DETAILS
STRUCTURE NO. 062-0074

SHEET 3 OF 24 SHEETS

F.A. RTE.	SECTION	COUNTY	TOTAL SHEETS	SHEET NO.
318	(3-B) BR	MARSHALL	72	26

CONTRACT NO. 68E33

ILLINOIS | FED. AID PROJECT

MODEL: Default
FILE NAME: X:\Projects\Current\192-1373 IDOT D4 PTB193-024 WO16 IL 29 over Barrville\DGN\D468E33-003-Stage Const Details.dgn
10/10/2024 9:05:20 AM

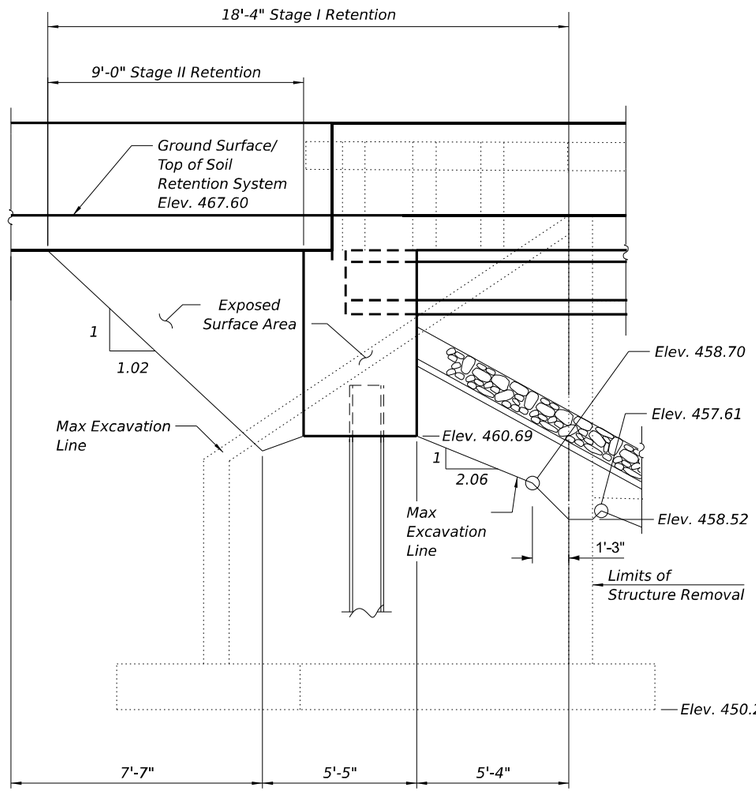

NORTH ABUTMENT
TEMPORARY SOIL RETENTION SYSTEM

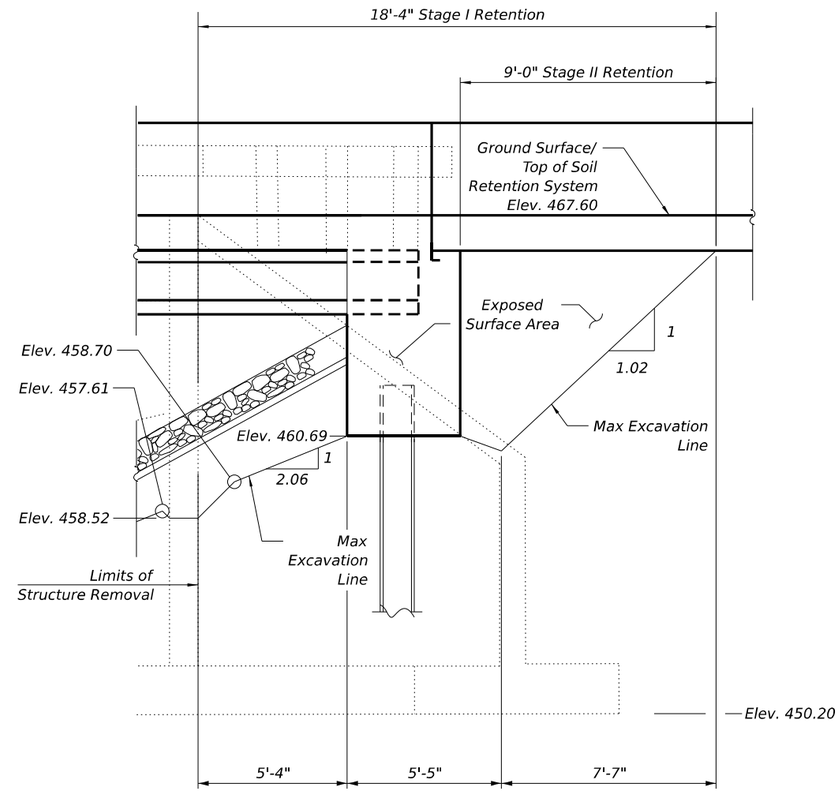

SOUTH ABUTMENT
TEMPORARY SOIL RETENTION SYSTEM

Note:
A cantilevered sheet piling design does not appear feasible and additional members or other retention systems may be necessary. The Contractor shall submit a temporary soil retention system design including plan details and calculations for review and acceptance by the Engineer.

MODEL: Default
FILE NAME: X:\Projects\Current\192-1373 IDOT D4 PTB193-024 WO16 IL 29 over Barrville\DGN\D468E33-004-Temporary Soil Retention System.dgn
10/9/2024 1:27:25 PM

HR Hurst-Rosche, Inc. PROFESSIONAL DESIGN NUMBER: 184-000588 1400 E. TREMONT ST. HILLSBORO, IL PH: 217,532,3959 JOB NO. 192-1373	USER NAME =	DESIGNED - JJC	REVISED -	STATE OF ILLINOIS DEPARTMENT OF TRANSPORTATION	TEMPORARY SOIL RETENTION SYSTEM STRUCTURE NO. 062-0074	F.A. RTE.	SECTION	COUNTY	TOTAL SHEETS / SHEET NO.
		CHECKED - CJC	REVISED -			318	(3-B) BR	MARSHALL	72 / 27
	PLOT SCALE =	DRAWN - AE	REVISED -			CONTRACT NO. 68E33			
	PLOT DATE =	CHECKED - JJC	REVISED -		SHEET 4 OF 24 SHEETS	ILLINOIS	FED. AID PROJECT		

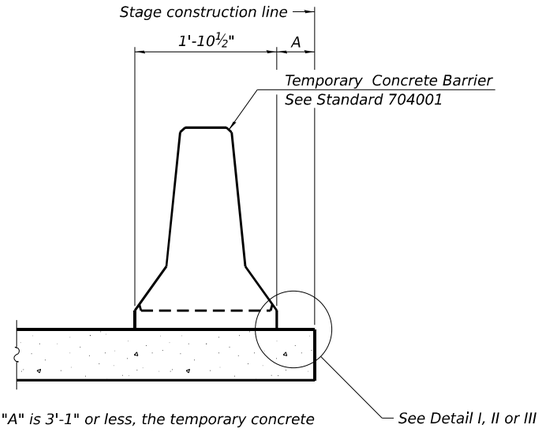

When "A" is 3'-1" or less, the temporary concrete barrier shall be restrained to the new slab according to Detail I, II or III. No restraint is required when "A" is greater than 3'-1".

NEW SLAB OR NEW DECK BEAM

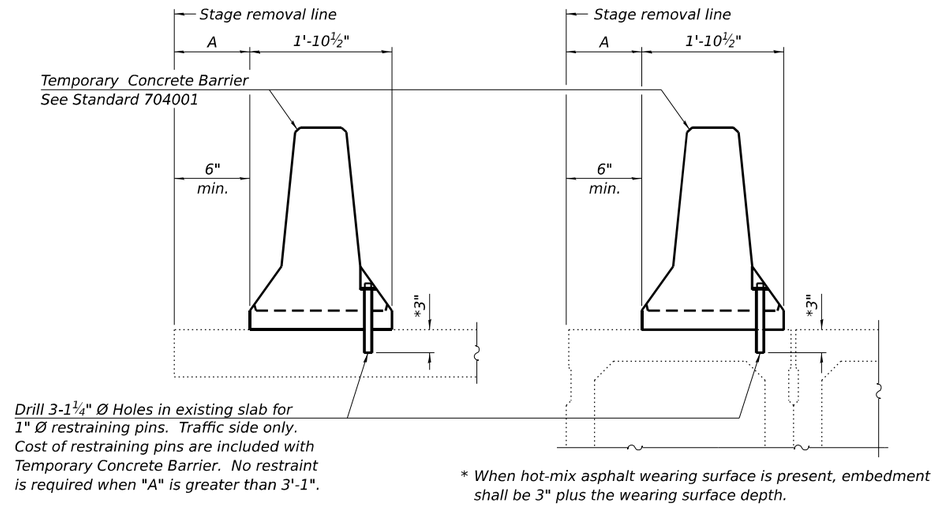

EXISTING SLAB

EXISTING DECK BEAM

SECTIONS THRU SLAB OR DECK BEAM

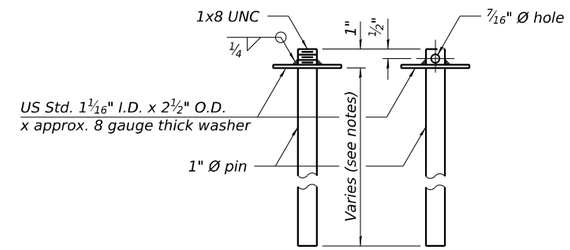

RESTRAINING PIN

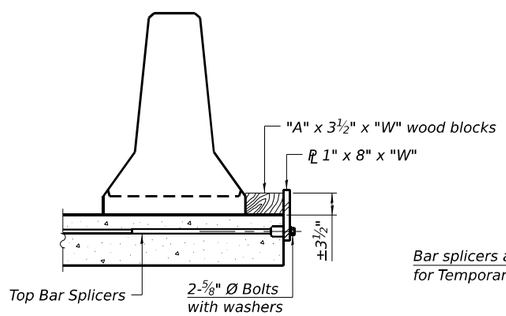

DETAIL I

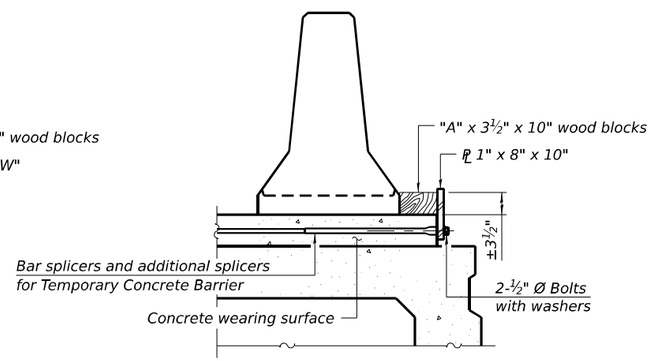

DETAIL II

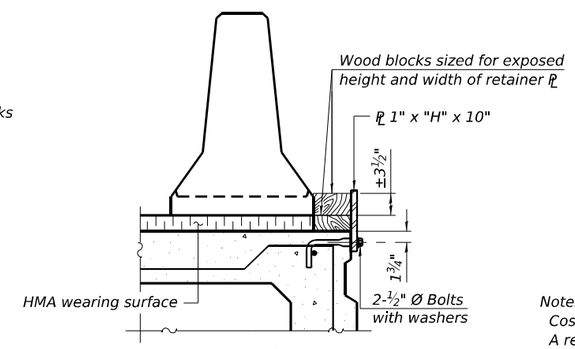

DETAIL III

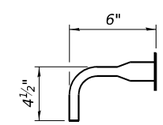

BAR SPLICER FOR #4 BAR - DETAIL III

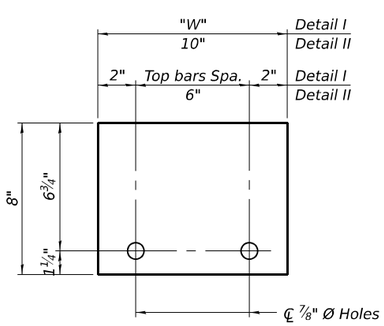

STEEL RETAINER PL 1" x 8" x "W"

(Detail I and II)

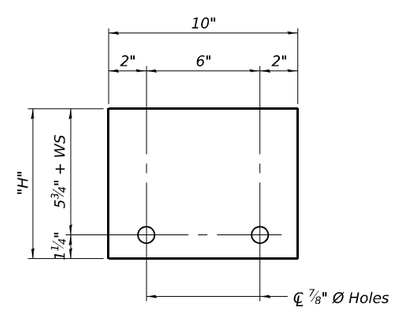

STEEL RETAINER PL 1" x "H" x 10"

(Detail III)

Notes:

Cost of retainer assembly is included with Temporary Concrete Barrier.

A retainer assembly shall be located at the approximate ℄ of each temporary concrete barrier.

The retainer plate shall not be removed until the concrete on the adjacent stage is ready to be poured. For Detail III applications the retainer plate shall not be removed until just prior to placing the adjacent beam.

When the 'A' dimension is less than 1½", the wood block shall be omitted and the barrier shall be placed in direct contact with the steel retainer plate. For deck beam applications the minimum required 'A' distance is 6" to accommodate the shear key clamping device.

Detail I - Installation for a new bridge deck or bridge slab.

Detail II - Installation for a new deck beam with an initial concrete wearing surface. Additional bar splicers shall be provided at 6'-0" centers and paired with the bar splicers of the concrete wearing surface reinforcement to accommodate the installation of the retainer assemblies. The cost of the additional bar splicers is included with the concrete wearing surface.

Detail III - Installation for a new deck beam with no initial wearing surface or with an initial hot-mix asphalt (HMA) wearing surface present. The deck beam directly beneath the temporary concrete barrier shall be fabricated with bar splicer inserts in the side of the beam, as detailed, to accommodate the installation of the retainer assemblies. A pair of bar splicers, 6" apart, shall be placed at 6'-0" centers along the length of the beam. The cost of the bar splicers is included with the deck beam.

RAILING CRITERIA

NCHRP 350 Test Level	3
Railing Weight (plf)	440

R-27

5-15-2023

Hurst-Rosche, Inc.
PROFESSIONAL DESIGN NUMBER 184-001008
1400 E. TREMONT ST.
HILLSBORO, IL
PH: 217.532.3959
JOB NO. 192-1373

USER NAME =	DESIGNED - JJC	REVISED -
	CHECKED - CJC	REVISED -
PLOT SCALE =	DRAWN - AE	REVISED -
PLOT DATE =	CHECKED - JJC	REVISED -

STATE OF ILLINOIS
DEPARTMENT OF TRANSPORTATION

TEMPORARY CONCRETE BARRIER
STRUCTURE NO. 062-0074

SHEET 5 OF 24 SHEETS

F.A. RTE.	SECTION	COUNTY	TOTAL SHEETS	SHEET NO.
318	(3-B) BR	MARSHALL	72	28

CONTRACT NO. 68E33

ILLINOIS | FED. AID PROJECT

MODEL: Default
FILE NAME: X:\Projects\Current\192-1373 IDOT D4 PTB193-024 WO16 IL 29 over Barrville\DGN\D468E33-005-Temp Conc Barrier.dgn

10/10/2024 9:06:43 AM

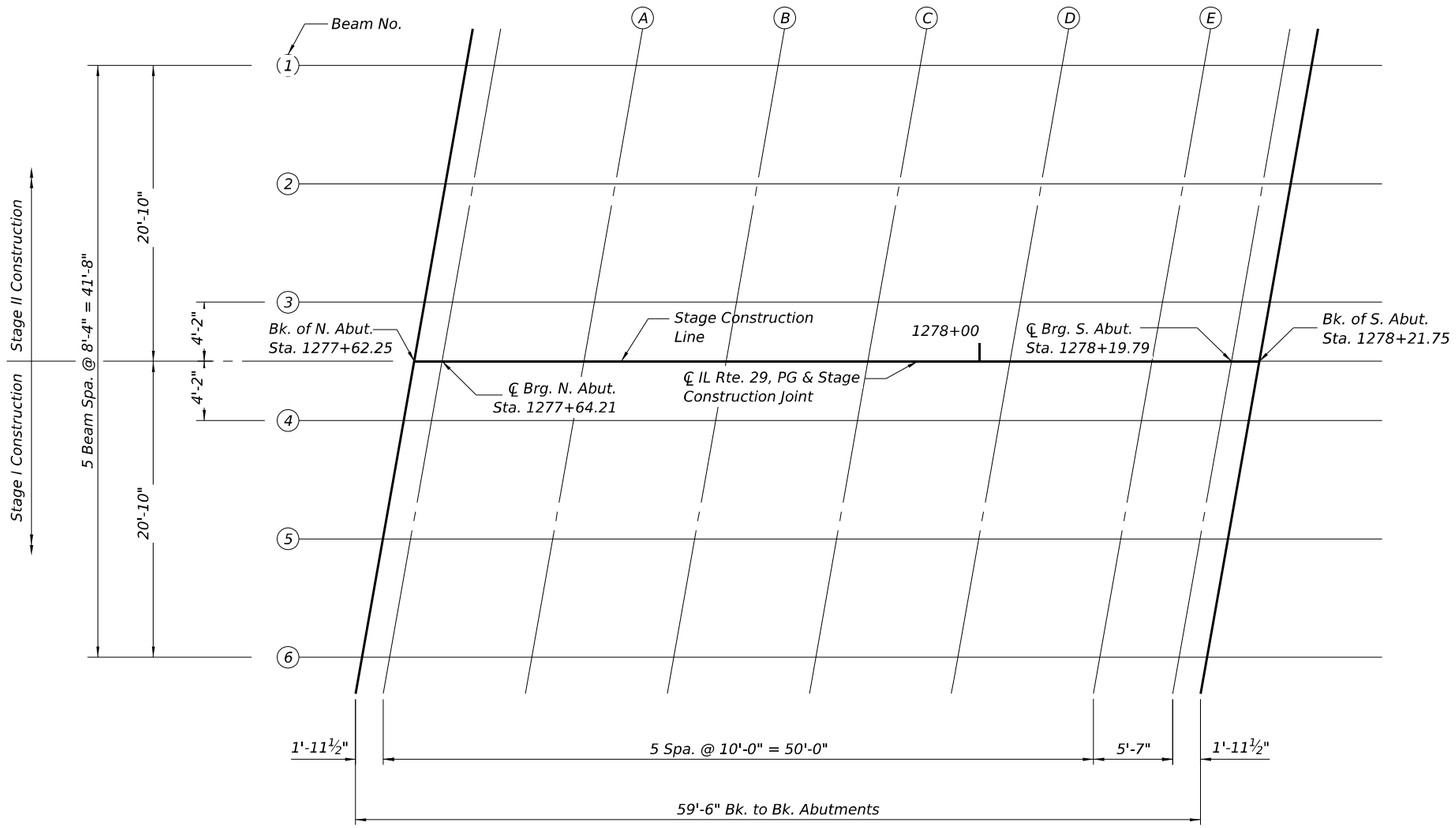

PLAN

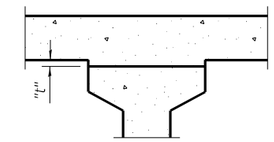

To determine "t": After all precast prestressed beams have been erected, elevations of the top flanges of the beams shall be taken at intervals shown on sheet 7. These elevations subtracted from the "Theoretical Grade Elevations Adjusted for Dead Load Deflections" shown on sheet 7, minus slab thickness, equals the fillet heights "t" above top flanges of beams.

INTERIOR BEAMS FILLET HEIGHTS

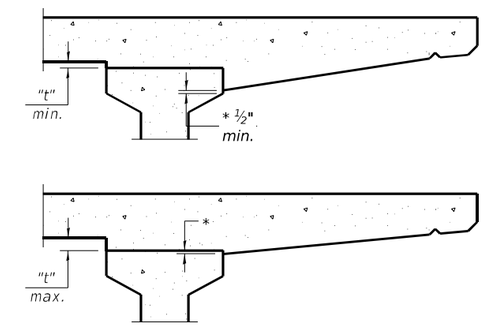

EXTERIOR BEAMS FILLET HEIGHTS

** Variable (not less than ½")*

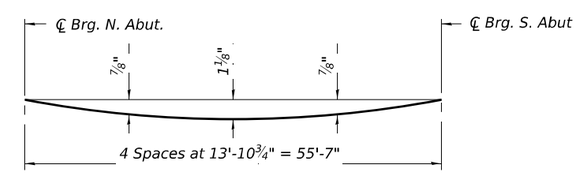

DEAD LOAD DEFLECTION DIAGRAM

(Includes weight of concrete only.)

Note:
The above deflections are not to be used in the field if the engineer is working from the grade elevations adjusted for dead load deflections as shown on sheet 7.

MODEL: Default
FILE NAME: X:\Projects\Current\192-1373 IDOT D4 PTB193-024 WO16 IL 29 over Barrville\DGN\D468E33-006-Top of Slab Elevation Plan.dgn
10/10/2024 9:07:59 AM

Hurst-Rosche, Inc. PROFESSIONAL DESIGN NUMBER: 184-000298 1400 E. TREMONT ST. HILLSBORO, IL PH: 217,532,3959 JOB NO. 192-1373	USER NAME =	DESIGNED - JJC	REVISED -	STATE OF ILLINOIS DEPARTMENT OF TRANSPORTATION	TOP OF SLAB ELEVATIONS LAYOUT STRUCTURE NO. 062-0074	F.A. RTE.	SECTION	COUNTY	TOTAL SHEETS / SHEET NO.
		CHECKED - CJC	REVISED -			318	(3-B) BR	MARSHALL	72 / 29
	PLOT SCALE =	DRAWN - AE	REVISED -					CONTRACT NO. 68E33	
	PLOT DATE =	CHECKED - JJC	REVISED -		SHEET 6 OF 24 SHEETS		ILLINOIS	FED. AID PROJECT	

BEAM 1

Location	Station	Offset	Theoretical Grade Elevations	Theoretical Grade Elevations Adjusted For Dead Load Deflection
Bk. N. Abut	1277+65.92	-20.83	467.24	467.24
℄ Brg. N. Abut	1277+67.88	-20.83	467.24	467.24
A	1277+77.88	-20.83	467.24	467.30
B	1277+87.88	-20.83	467.24	467.33
C	1277+97.88	-20.83	467.24	467.33
D	1278+07.88	-20.83	467.24	467.32
E	1278+17.88	-20.83	467.24	467.27
℄ Brg. S. Abut	1278+23.46	-20.83	467.24	467.24
Bk. S. Abut	1278+25.42	-20.83	467.24	467.24

BEAM 2

Location	Station	Offset	Theoretical Grade Elevations	Theoretical Grade Elevations Adjusted For Dead Load Deflection
Bk. N. Abut	1277+64.45	-12.50	467.41	467.41
℄ Brg. N. Abut	1277+66.41	-12.50	467.41	467.41
A	1277+76.41	-12.50	467.41	467.46
B	1277+86.41	-12.50	467.41	467.49
C	1277+96.41	-12.50	467.41	467.50
D	1278+06.41	-12.50	467.41	467.49
E	1278+16.41	-12.50	467.41	467.44
℄ Brg. S. Abut	1278+22.00	-12.50	467.41	467.41
Bk. S. Abut	1278+23.96	-12.50	467.41	467.41

BEAM 3

Location	Station	Offset	Theoretical Grade Elevations	Theoretical Grade Elevations Adjusted For Dead Load Deflection
Bk. N. Abut	1277+62.99	-4.17	467.54	467.54
℄ Brg. N. Abut	1277+64.94	-4.17	467.54	467.54
A	1277+74.94	-4.17	467.54	467.59
B	1277+84.94	-4.17	467.54	467.62
C	1277+94.94	-4.17	467.54	467.63
D	1278+04.94	-4.17	467.54	467.61
E	1278+14.94	-4.17	467.54	467.57
℄ Brg. S. Abut	1278+20.52	-4.17	467.54	467.54
Bk. S. Abut	1278+22.49	-4.17	467.54	467.54

℄ IL RTE. 29, P.G. & STAGE CONSTRUCTION JOINT

Location	Station	Offset	Theoretical Grade Elevations	Theoretical Grade Elevations Adjusted For Dead Load Deflection
Bk. N. Abut	1277+62.25	0.00	467.60	467.60
℄ Brg. N. Abut	1277+64.21	0.00	467.60	467.60
A	1277+74.21	0.00	467.60	467.65
B	1277+84.21	0.00	467.60	467.68
C	1277+94.21	0.00	467.60	467.69
D	1278+04.21	0.00	467.60	467.68
E	1278+14.21	0.00	467.60	467.63
℄ Brg. S. Abut	1278+19.79	0.00	467.60	467.60
Bk. S. Abut	1278+21.75	0.00	467.60	467.60

BEAM 4

Location	Station	Offset	Theoretical Grade Elevations	Theoretical Grade Elevations Adjusted For Dead Load Deflection
Bk. N. Abut	1277+61.52	4.17	467.54	467.54
℄ Brg. N. Abut	1277+63.47	4.17	467.54	467.54
A	1277+73.47	4.17	467.54	467.59
B	1277+83.47	4.17	467.54	467.62
C	1277+93.47	4.17	467.54	467.63
D	1278+03.47	4.17	467.54	467.61
E	1278+13.47	4.17	467.54	467.57
℄ Brg. S. Abut	1278+19.06	4.17	467.54	467.54
Bk. S. Abut	1278+21.02	4.17	467.54	467.54

BEAM 5

Location	Station	Offset	Theoretical Grade Elevations	Theoretical Grade Elevations Adjusted For Dead Load Deflection
Bk. N. Abut	1277+60.05	12.50	467.41	467.41
℄ Brg. N. Abut	1277+62.00	12.50	467.41	467.41
A	1277+72.00	12.50	467.41	467.46
B	1277+82.00	12.50	467.41	467.49
C	1277+92.00	12.50	467.41	467.50
D	1278+02.00	12.50	467.41	467.49
E	1278+12.00	12.50	467.41	467.44
℄ Brg. S. Abut	1278+17.59	12.50	467.41	467.41
Bk. S. Abut	1278+19.55	12.50	467.41	467.41

BEAM 6

Location	Station	Offset	Theoretical Grade Elevations	Theoretical Grade Elevations Adjusted For Dead Load Deflection
Bk. N. Abut	1277+58.58	20.83	467.24	467.24
℄ Brg. N. Abut	1277+60.54	20.83	467.24	467.24
A	1277+70.54	20.83	467.24	467.30
B	1277+80.54	20.83	467.24	467.33
C	1277+90.54	20.83	467.24	467.33
D	1278+00.54	20.83	467.24	467.32
E	1278+10.54	20.83	467.24	467.27
℄ Brg. S. Abut	1278+16.12	20.83	467.24	467.24
Bk. S. Abut	1278+18.08	20.83	467.24	467.24

Notes:
Offsets to the left of centerline of roadway are negative.
Offsets to the right of centerline of roadway are positve.

EAST EDGE OF SHOULDER

Location	Station	Offset	Theoretical Grade Elevations
N. End of N. Approach Slab	1277+37.13	-22	467.22
A1	1277+47.13	-22	467.22
A2	1277+57.13	-22	467.22
S. End of N. Approach Slab	1277+67.13	-22	467.22

EAST EDGE OF PAVEMENT

Location	Station	Offset	Theoretical Grade Elevations
N. End of N. Approach Slab	1277+35.37	-12	467.42
A1	1277+45.37	-12	467.42
A2	1277+55.37	-12	467.42
S. End of N. Approach Slab	1277+65.37	-12	467.42

℄ IL RTE. 29, P.G. & STAGE CONSTRUCTION JOINT

Location	Station	Offset	Theoretical Grade Elevations
N. End of N. Approach Slab	1277+33.25	0	467.60
A1	1277+43.25	0	467.60
A2	1277+53.25	0	467.60
S. End of N. Approach Slab	1277+63.25	0	467.60

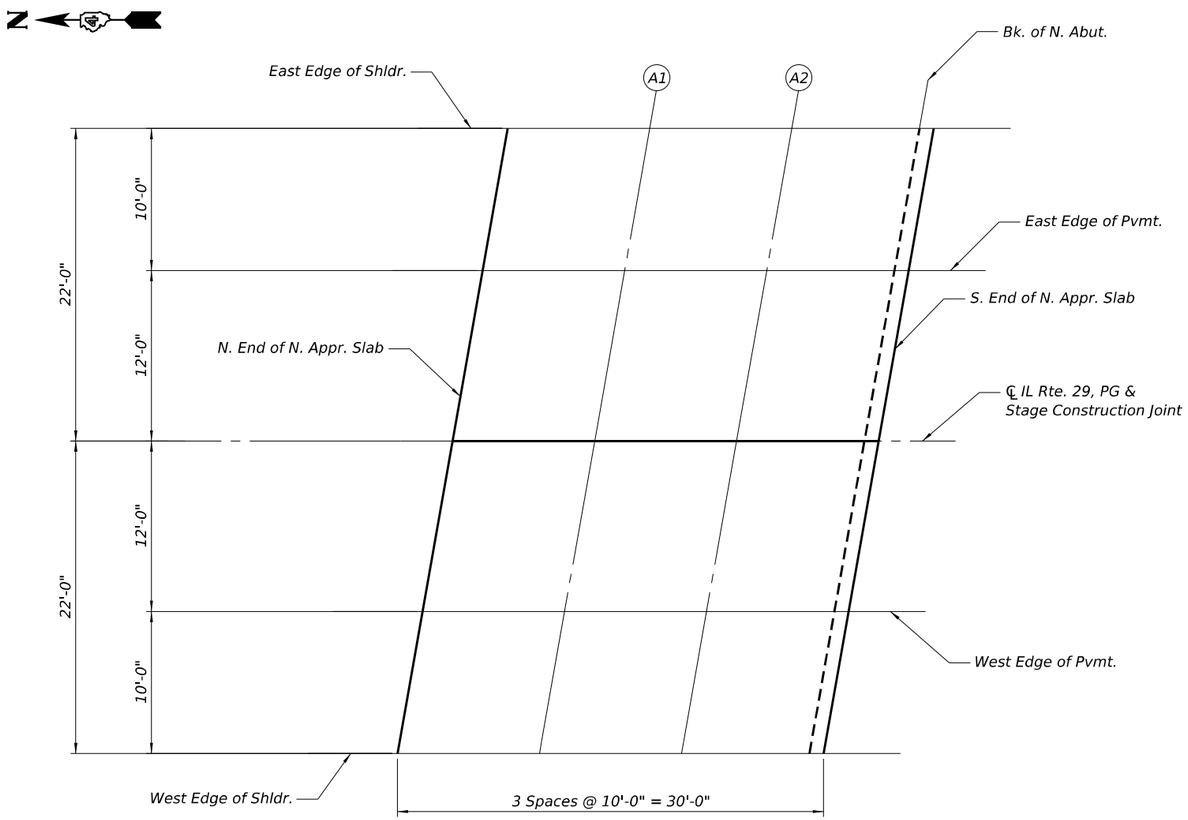

PLAN

WEST EDGE OF PAVEMENT

Location	Station	Offset	Theoretical Grade Elevations
N. End of N. Approach Slab	1277+31.13	12	467.42
A1	1277+41.13	12	467.42
A2	1277+51.13	12	467.42
S. End of N. Approach Slab	1277+61.13	12	467.42

WEST EDGE OF SHOULDER

Location	Station	Offset	Theoretical Grade Elevations
N. End of N. Approach Slab	1277+29.37	22	467.22
A1	1277+39.37	22	467.22
A2	1277+49.37	22	467.22
S. End of N. Approach Slab	1277+59.37	22	467.22

EAST EDGE OF SHOULDER

Location	Station	Offset	Theoretical Grade Elevations
N. End of S. Approach Slab	1278+24.63	-22	467.22
E1	1278+34.63	-22	467.22
E2	1278+44.63	-22	467.22
S. End of S. Approach Slab	1278+54.63	-22	467.21

EAST EDGE OF PAVEMENT

Location	Station	Offset	Theoretical Grade Elevations
N. End of S. Approach Slab	1278+22.87	-12	467.42
E1	1278+32.87	-12	467.42
E2	1278+42.87	-12	467.42
S. End of S. Approach Slab	1278+52.87	-12	467.42

℄ IL RTE. 29, P.G. & STAGE CONSTRUCTION JOINT

Location	Station	Offset	Theoretical Grade Elevations
N. End of S. Approach Slab	1278+20.75	0	467.60
E1	1278+30.75	0	467.60
E2	1278+40.75	0	467.60
S. End of S. Approach Slab	1278+50.75	0	467.60

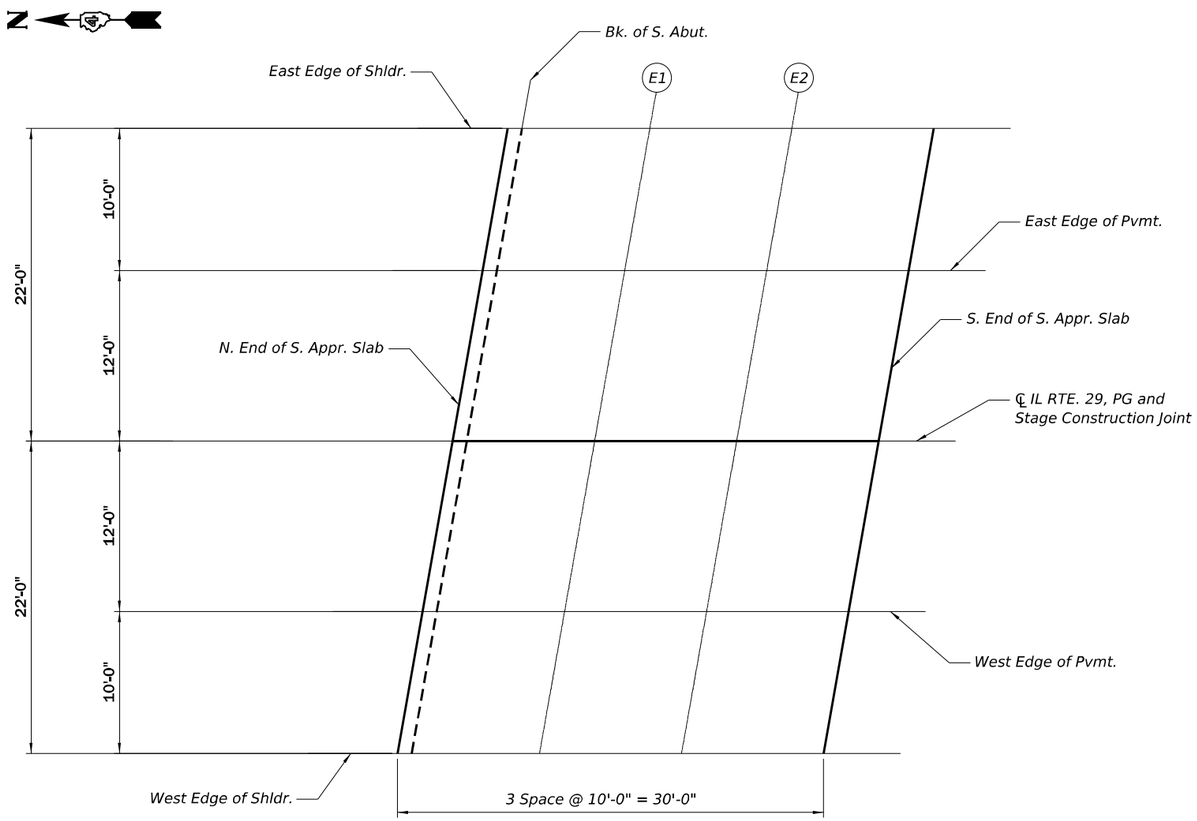

PLAN

WEST EDGE OF PAVEMENT

Location	Station	Offset	Theoretical Grade Elevations
N. End of S. Approach Slab	1278+18.63	12	467.42
E1	1278+28.63	12	467.42
E2	1278+38.63	12	467.42
S. End of S. Approach Slab	1278+48.63	12	467.42

WEST EDGE OF SHOULDER

Location	Station	Offset	Theoretical Grade Elevations
N. End of S. Approach Slab	1278+16.87	22	467.22
E1	1278+26.87	22	467.22
E2	1278+36.87	22	467.22
S. End of S. Approach Slab	1278+46.87	22	467.22

MODEL: Default
FILE NAME: X:\Projects\Current\192-1373 IDOT D4 PTB193-024 WO16 IL 29 over Barrville\DGN\D468E33-009-Top of South Approach Slab.dgn

Hurst-Rosche, Inc.
PROFESSIONAL DESIGN NUMBER 184-000598
1400 E. TREMONT ST.
HILLSBORO, IL
PH: 217.532.3959
JOB NO. 192-1373

USER NAME =	DESIGNED - JJC	REVISED -	
	CHECKED - CJC	REVISED -	
PLOT SCALE =	DRAWN - AE	REVISED -	
PLOT DATE =	CHECKED - JJC	REVISED -	

STATE OF ILLINOIS
DEPARTMENT OF TRANSPORTATION

TOP OF SOUTH APPROACH SLAB ELEVATIONS
STRUCTURE NO. 062-0074

SHEET 9 OF 24 SHEETS

F.A. RTE.	SECTION	COUNTY	TOTAL SHEETS	SHEET NO.
318	(3-B) BR	MARSHALL	72	32
		CONTRACT NO. 68E33		
	ILLINOIS	FED. AID PROJECT		

10/10/2024 9:10:26 AM

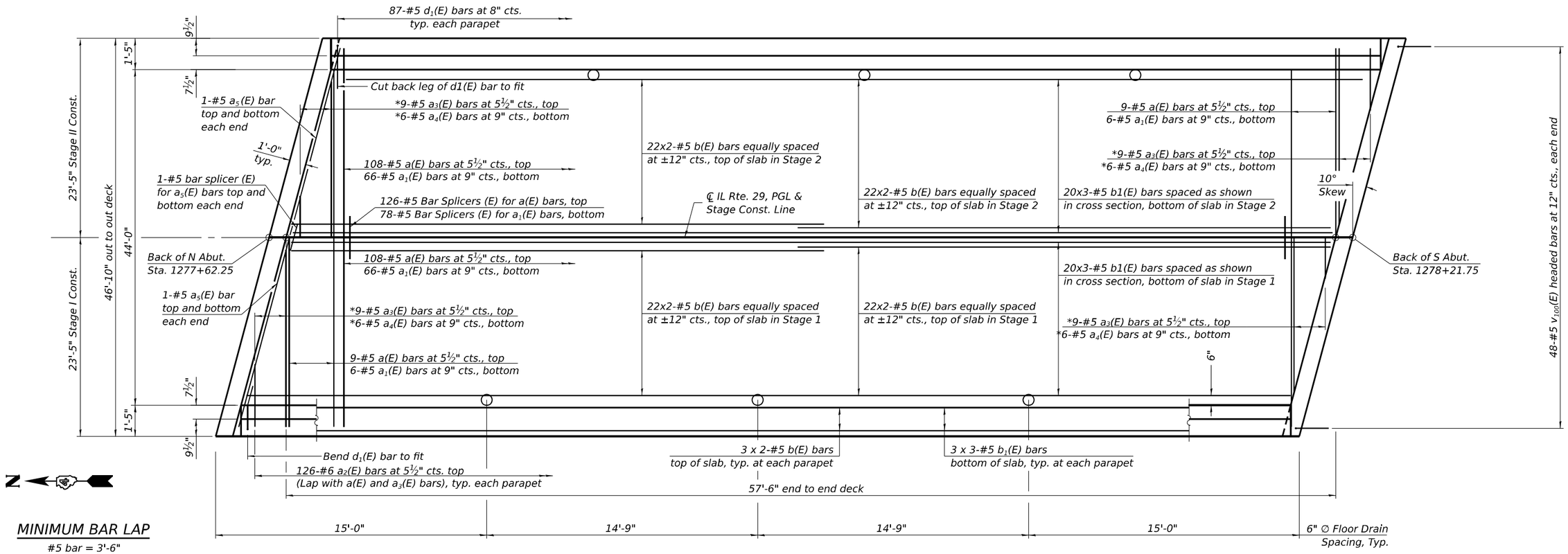

MINIMUM BAR LAP

#5 bar = 3'-6"

* See Field Cutting Diagram on sheet 11 of 24

PLAN

Notes:

See sheet 11 of 24 for superstructure details and Bill of Material.

Bars indicated thus 20 x 3-#5 etc. indicates 20 lines of bars with 3 lengths per line.

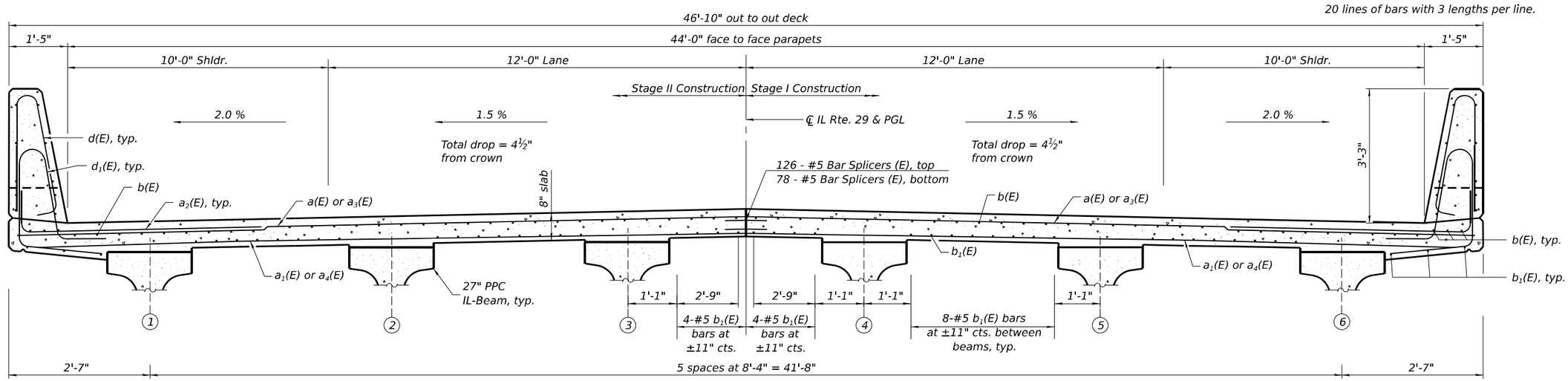

CROSS SECTION

(Looking South)

MODEL: Default
FILE NAME: X:\Projects\Current\192-1373 IDOT D4 PTB193-024 WO16 IL 29 over Barrville\DGN\D468E33-010-Superstructure Plan.dgn

10/9/2024 1:43:32 PM

Hurst-Rosche, Inc. PROFESSIONAL DESIGN NUMBER: 184-000598 1400 E. TREMONT ST. HILLSBORO, IL PH: 217.532.3959 JOB NO. 192-1373	USER NAME =	DESIGNED - JJC	REVISED -	STATE OF ILLINOIS DEPARTMENT OF TRANSPORTATION	SUPERSTRUCTURE PLAN STRUCTURE NO. 062-0074
		CHECKED - CJC	REVISED -		
	PLOT SCALE =	DRAWN - AE	REVISED -		
	PLOT DATE =	CHECKED - JJC	REVISED -		SHEET 10 OF 24 SHEETS

F.A. RTE.	SECTION	COUNTY	TOTAL SHEETS	SHEET NO.
318	(3-B) BR	MARSHALL	72	33
		CONTRACT NO. 68E33		
	ILLINOIS	FED. AID PROJECT		

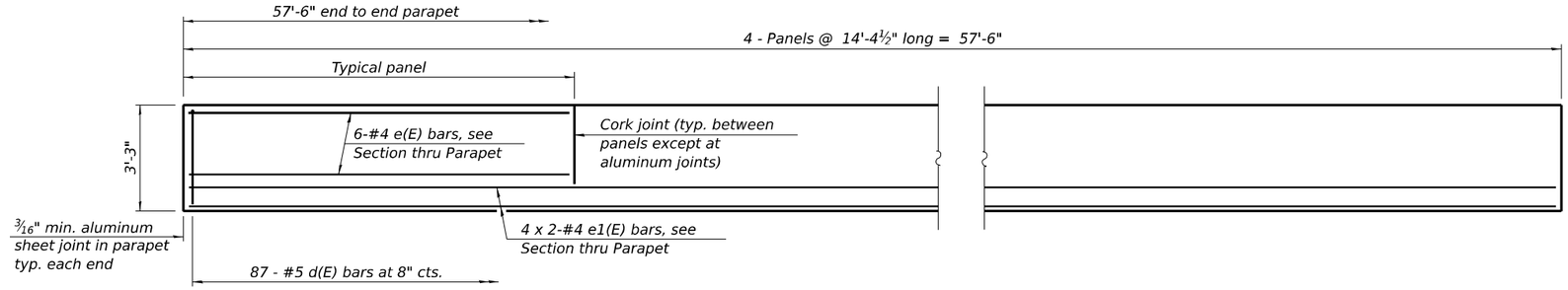

INSIDE ELEVATION OF PARAPET

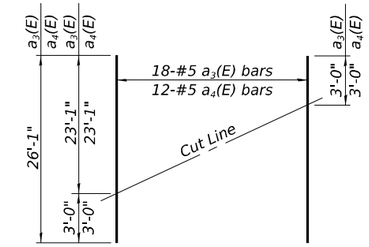

FIELD CUTTING DIAGRAM

Order $a_3(E)$ and $a_4(E)$ bars full length. Cut as shown and use remainder of bars in opposite end of deck.

MINIMUM BAR LAP

#4 bar = 2'-5"

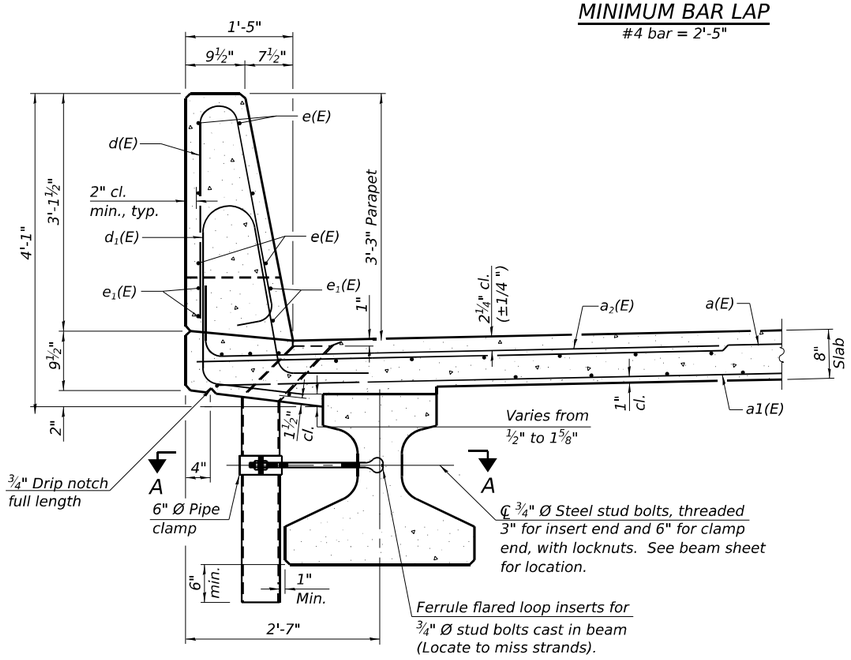

SECTION THRU PARAPET

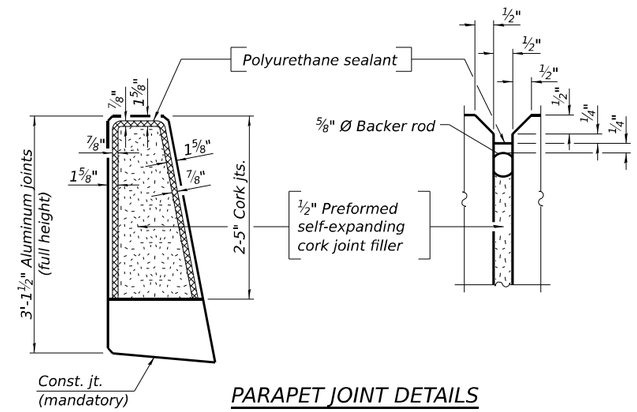

PARAPET JOINT DETAILS

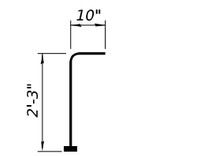

BAR $v_{100}(E)$

(Headed. 96 - #5 Bar terminators)

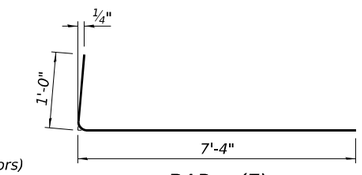

BAR $a_2(E)$

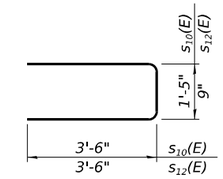

BARS $s_{10}(E)$ & $s_{12}(E)$

SUPERSTRUCTURE BILL OF MATERIAL

Bar	No.	Size	Length	Shape
a(E)	234	#5	23'-1"	
$a_1(E)$	144	#5	23'-1"	
$a_2(E)$	252	#6	8'-4"	
$a_3(E)$	18	#5	26'-1"	
$a_4(E)$	12	#5	26'-1"	
$a_5(E)$	8	#5	23'-8"	
b(E)	100	#5	30'-4"	
$b_1(E)$	138	#5	21'-2"	
d(E)	174	#5	6'-4"	
$d_1(E)$	174	#5	7'-8"	
e(E)	48	#4	14'-0"	
$e_1(E)$	16	#4	29'-10"	
$m_{10}(E)$	16	#6	23'-6"	
$m_{11}(E)$	16	#6	7'-2"	
$m_{12}(E)$	8	#6	1'-10"	
$m_{13}(E)$	8	#6	5'-6"	
$m_{14}(E)$	4	#6	1'-0"	
$m_{15}(E)$	24	#5	4'-0"	
$m_{16}(E)$	8	#6	3'-5"	
$m_{17}(E)$	4	#6	2'-8"	
$s_{10}(E)$	80	#5	8'-5"	
$s_{11}(E)$	80	#5	9'-1"	
$s_{12}(E)$	48	#5	7'-9"	
$v_{100}(E)$	96	#5	3'-1"	
Reinforcement Bars, Epoxy Coated		Lbs.	25,930	
Concrete Superstructure		Cu. Yds.	108.1	
Bridge Deck Grooving		Sq. Yds.	268	
Protective Coat		Sq. Yds.	281	
Bar Terminator		Each	96	

Bars indicated thus 1 x 2-#4 etc. indicates 1 line of bars with 2 lengths per line.

Notes:

Fiberglass pipe shall conform to ASTM D2996, with short-time rupture strength hoop tensile stress of 30,000 p.s.i. minimum.

The exterior surfaces of the fiberglass floor drains shall be pigmented by the manufacturer with a color that matches the concrete.

The top portion of aluminum floor drains shall be coated with 5 mils of either bitumen paint or epoxy paint to minimize reaction with wet concrete.

The clamping device and inserts shall be galvanized according to AASHTO M 232. Cost of clamping device included with Floor Drains.

The 3/16" min. aluminum sheet shall be ASTM B 209 alloy 3003-H14 and coated with 5 mils of either bitumen paint or epoxy paint to minimize reaction with wet concrete. Cost included with Concrete Superstructure.

The polyurethane sealant shall be according to Article 1050.04 of the Std. Spec. and the color shall be gray.

Bar Terminators paid for separately. See Total Bill of Materials.

Protective coat shall be applied to the top and inside faces of parapets and the top of deck.

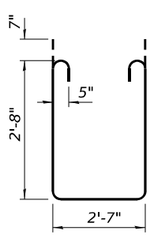

BAR $s_{11}(E)$

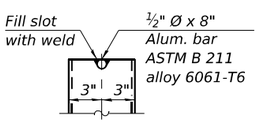

ALUMINUM TUBE

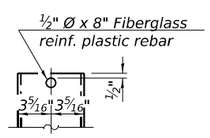

FIBERGLASS PIPE

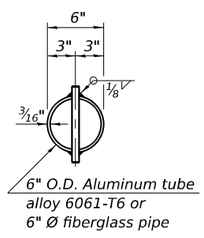

TOP PLAN

(Showing aluminum tube)

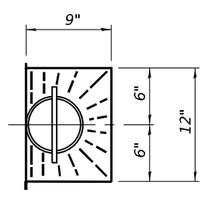

TOP PLAN

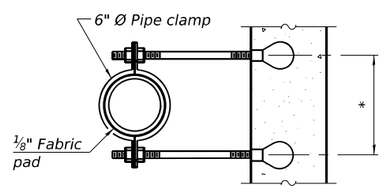

SECTION A-A

*Dimension as required by pipe clamp

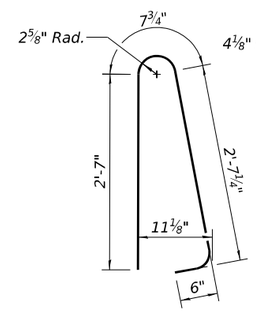

BAR d(E)

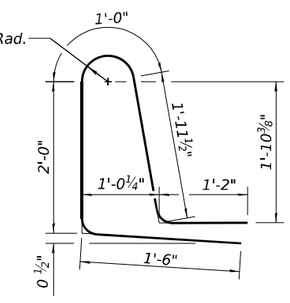

BAR $d_1(E)$

MODEL: Default
FILE NAME: X:\Projects\Current\192-1373 IDOT D4 PTB193-024 WO16 IL 29 over Barrville\DGN\D468E33-011-Superstructure Details.dgn

Hurst-Rosche, Inc. PROFESSIONAL DESIGN NUMBER 184-000598 1400 E. TREMONT ST. HILLSBORO, IL PH: 217.532.3959 JOB NO. 192-1373	USER NAME =	DESIGNED - JJC	REVISED -
		CHECKED - CJC	REVISED -
	PLOT SCALE =	DRAWN - AE	REVISED -
	PLOT DATE =	CHECKED - JJC	REVISED -

STATE OF ILLINOIS
DEPARTMENT OF TRANSPORTATION

SUPERSTRUCTURE DETAILS
STRUCTURE NO. 062-0074

SHEET 11 OF 24 SHEETS

F.A. RTE.	SECTION	COUNTY	TOTAL SHEETS	SHEET NO.
318	(3-B) BR	MARSHALL	72	34
		CONTRACT NO. 68E33		
	ILLINOIS	FED. AID PROJECT		

10/2/2024 3:12:04 PM

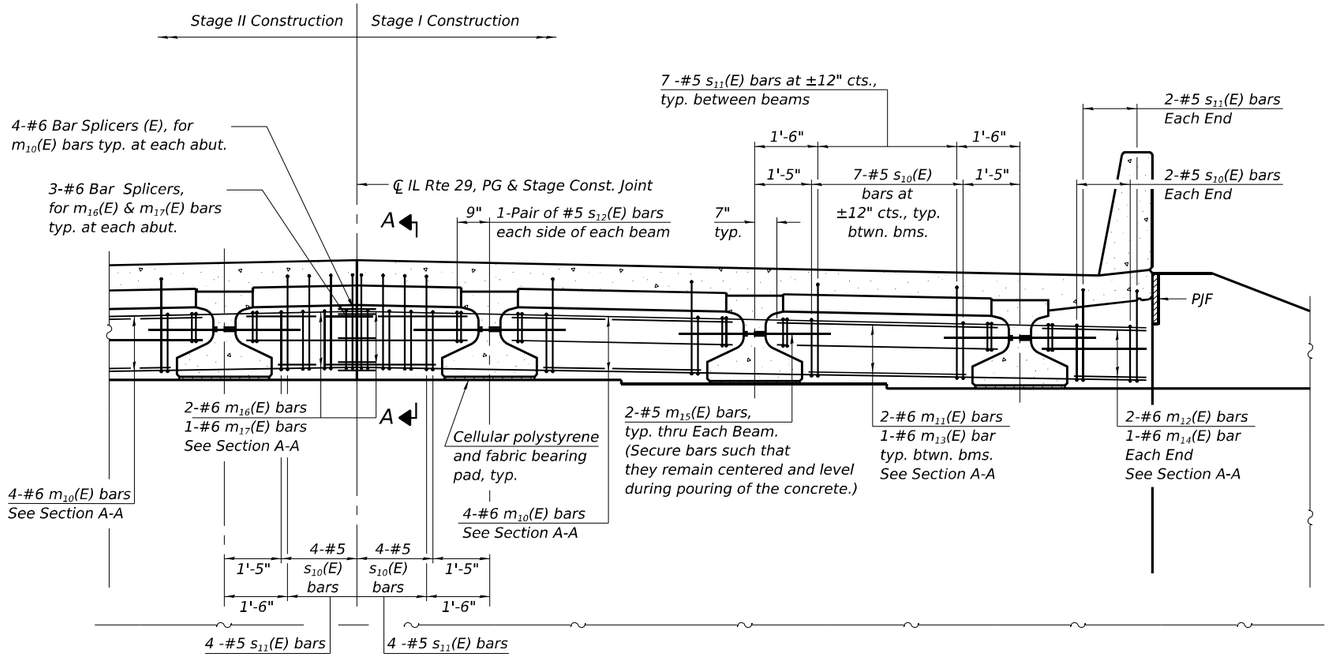

DIAPHRAGM AT ABUTMENT

(Looking South at South Abutment)

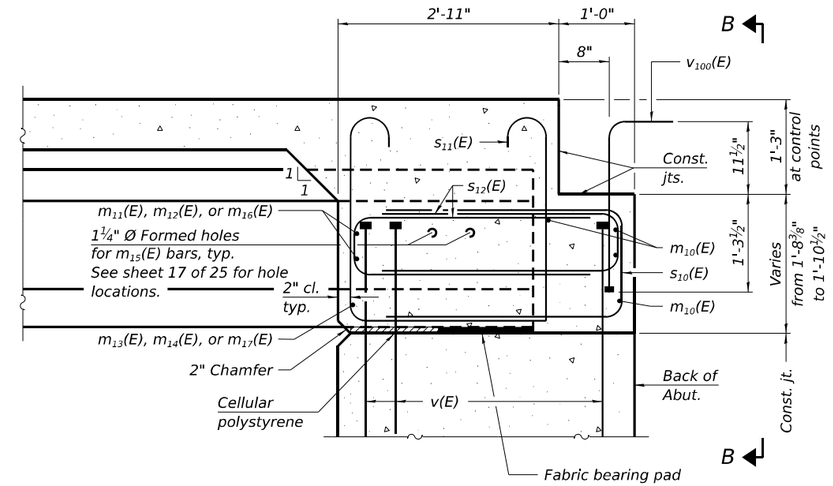

SECTION A-A

(at Rt. L's)

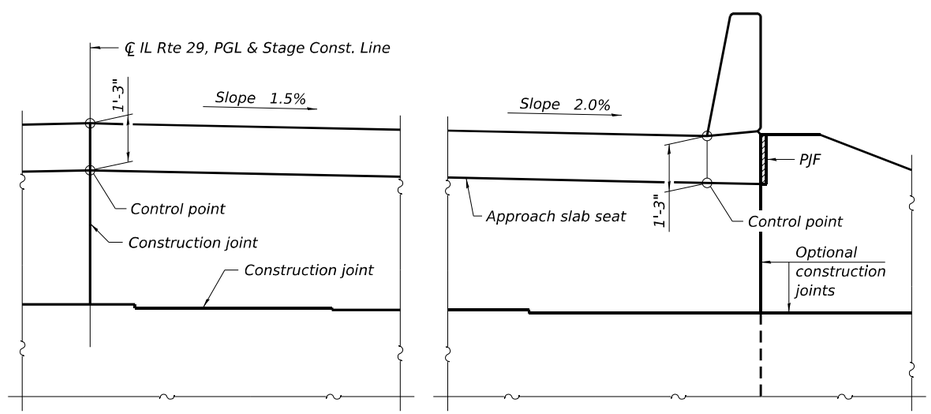

VIEW B-B

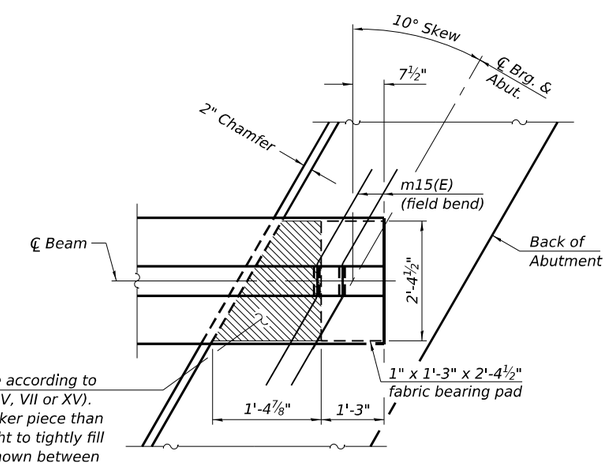

Cellular polystyrene according to ASTM C 578 (Types V, VII or XV). Provide slightly thicker piece than measured gap height to tightly fill the hatched area shown between abutment cap and bottom of beam.

PLAN AT ABUTMENT

(Showing bottom flange of beam)

Notes:

See sheet 11 of 24 for superstructure details and Bill of Material.

See sheet 13 of 24 for PJF details.

The s_{10}(E), s_{11}(E) and s_{12}(E) bars shall be placed parallel to the beams. Spacing for these bars shall be at right angles to the beams.

The approach slab seat shall have a constant slope determined from the control points shown.

Cost of cellular polystyrene is included with Concrete Superstructure.

Cost of fabric bearing pads is included with Furnishing and Erecting Precast Prestressed Concrete Beams, IL27N

See sheet 22 of 24 for bar splicer details.

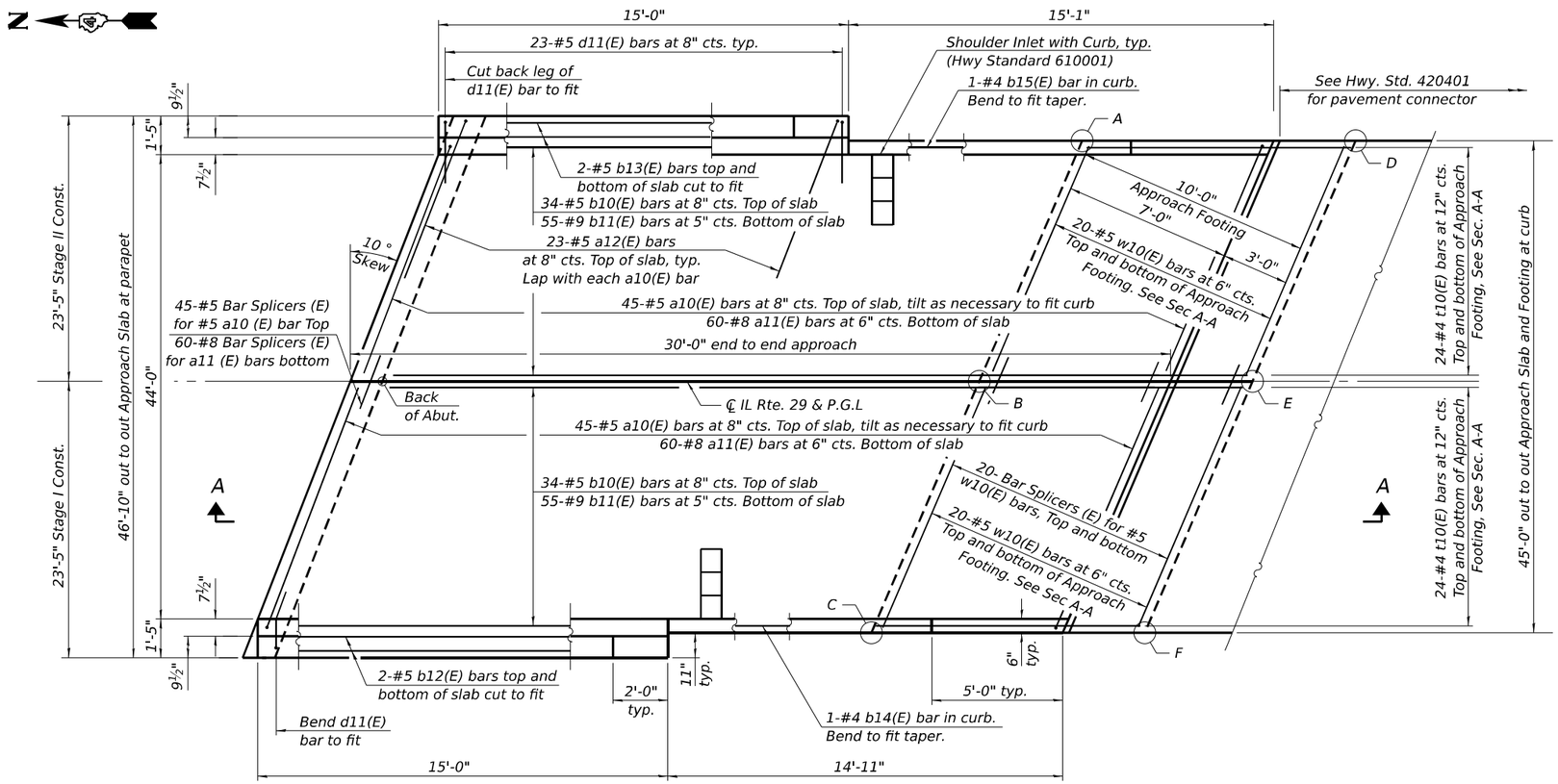

PLAN

(South approach slab shown; North approach slab similar by 180° rotation)

TOP AND BOTTOM ELEVATIONS FOR APPROACH FOOTING

North Approach			South Approach		
Point/ Location	Top	Bottom	Point/ Location	Top	Bottom
A - NE	465.96	465.13	A -	465.96	465.13
B - ℄-N	466.35	465.52	B -	466.35	465.52
C - NW	465.96	465.13	C -	465.96	465.13
D - SE	465.96	465.13	D -	465.95	465.12
E - ℄-S	466.35	465.52	E -	466.34	465.51
F - SW	465.97	465.13	F -	465.96	465.13

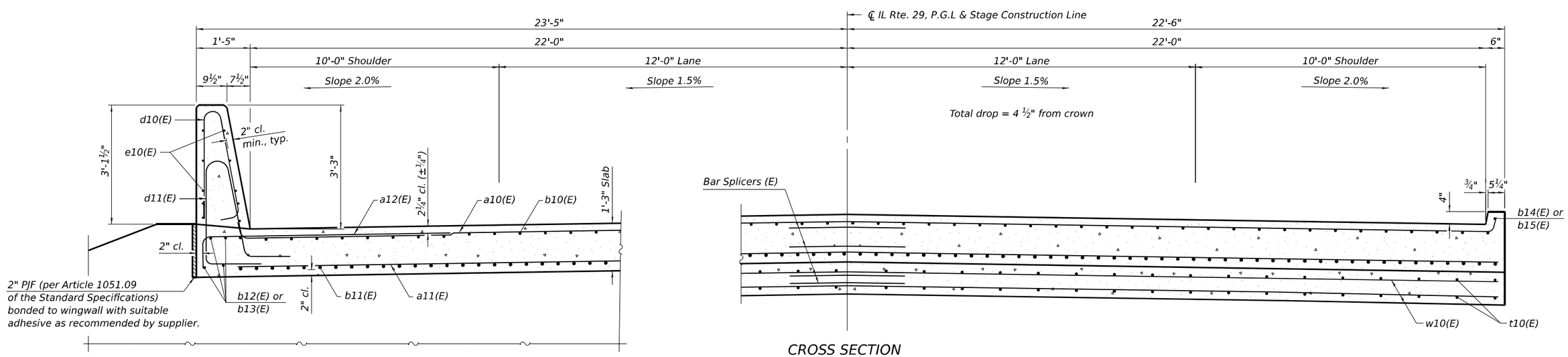

NEAR ABUTMENT

CROSS SECTION

(Looking South)

AT APPROACH FOOTING

(Sheet 1 of 2)

MODEL: Default
FILE NAME: X:\Projects\Current\192-1373 IDOT D4 PTB193-024 W016 IL 29 over Barrville\DGN\D468E33-013-Approach Slab Plan.dgn
10/2/2024 3:17:35 PM

Hurst-Rosche, Inc.
PROFESSIONAL DESIGN NUMBER 184-000558
1400 E. TREMONT ST.
HILLSBORO, IL
PH: 217.532.3959
JOB NO. 192-1373

USER NAME =	DESIGNED - JJC	REVISED -	
	CHECKED - CJC	REVISED -	
PLOT SCALE =	DRAWN - AE	REVISED -	
PLOT DATE =	CHECKED - JJC	REVISED -	

STATE OF ILLINOIS
DEPARTMENT OF TRANSPORTATION

BRIDGE APPROACH SLAB DETAILS (SHEET 1 OF 2)
STRUCTURE NO. 062-0074

SHEET 13 OF 24 SHEETS

F.A. RTE.	SECTION	COUNTY	TOTAL SHEETS	SHEET NO.
318	(3-B) BR	MARSHALL	72	36

CONTRACT NO. 68E33

ILLINOIS | FED. AID PROJECT

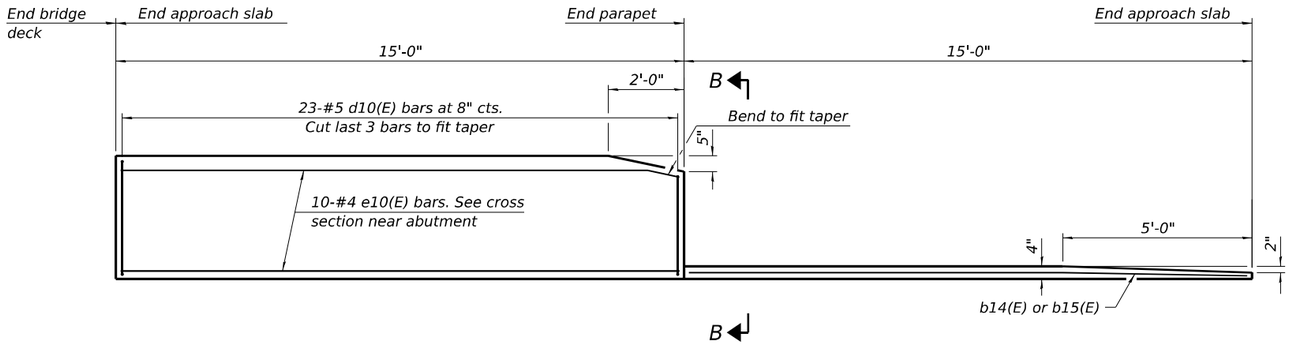

INSIDE ELEVATION OF PARAPET AND CURB

Notes:

The joint opening shall be adjusted for temperature per Article 520.04 of the Standard Specifications. However, since this detail is for jointless structures, the length of bridge used to calculate the adjustment shall be equal to half the total bridge length plus the length of the bridge approach slab.

Parapet concrete shall be paid for as Concrete Superstructure.

Approach slab shall be paid for as Concrete Superstructure (Approach Slab).

Approach footing concrete shall be paid for as Concrete Structures.

The approach footing maximum applied service bearing pressure (Qmax) = 2.0 ksf.

Cost of excavation for approach footing included with Concrete Structures.

For Granular Backfill for Structures and drainage treatment details, see sheet 2 of 24.

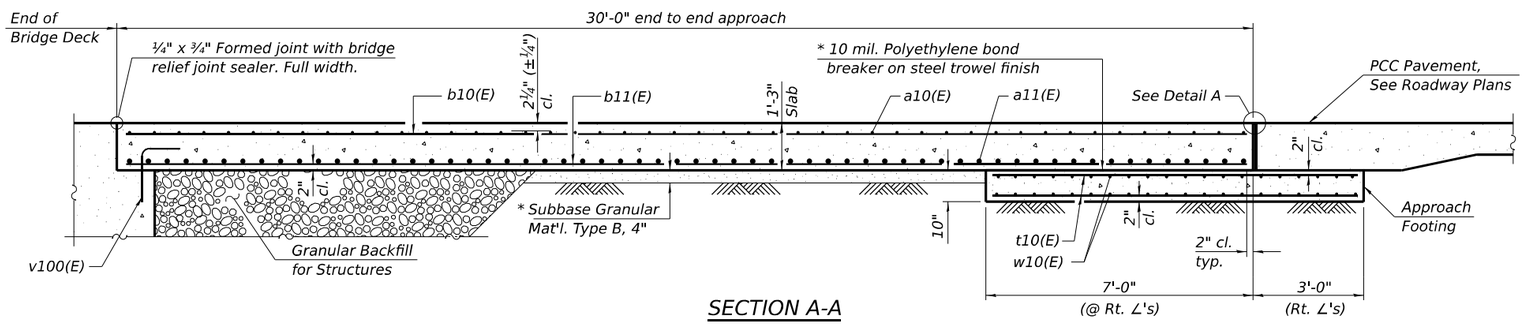

SECTION A-A

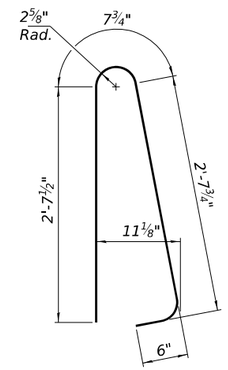

BAR d10(E)

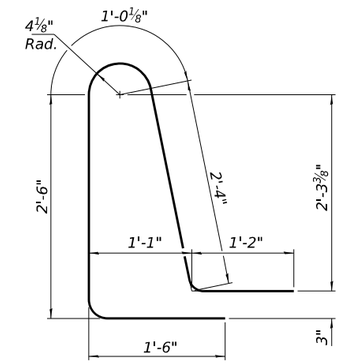

BAR d11(E)

TWO APPROACHES
BILL OF MATERIAL

Bar	No.	Size	Length	Shape
a10(E)	180	#5	22'-10"	
a11(E)	240	#8	22'-10"	
a12(E)	92	#5	7'-4"	
b10(E)	136	#5	29'-8"	
b11(E)	220	#9	29'-8"	
b12(E)	8	#5	15'-1"	
b13(E)	8	#5	14'-7"	
b14(E)	2	#4	14'-8"	
b15(E)	2	#4	14'-9"	
d10(E)	92	#5	6'-5"	
d11(E)	92	#5	8'-6"	
e10(E)	40	#4	14'-8"	
t10(E)	192	#4	9'-10"	
w10(E)	160	#5	22'-8"	
Concrete Superstructure			Cu. Yd.	7.8
Concrete Superstructure (Approach Slab)			Cu. Yd.	128
Concrete Structures			Cu. Yd.	29.5
Reinforcement Bars, Epoxy Coated			Pound	53,180
Bridge Deck Grooving			Sq. Yd.	280
Protective Coat			Sq. Yd.	293

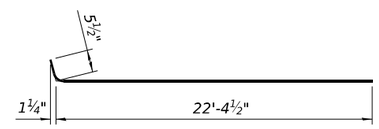

BAR a10(E)

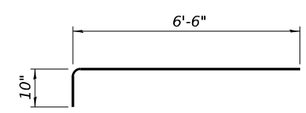

BAR a12(E)

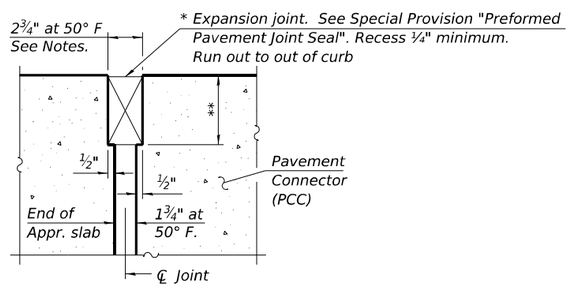

DETAIL A
(at Rt. ∠'s)

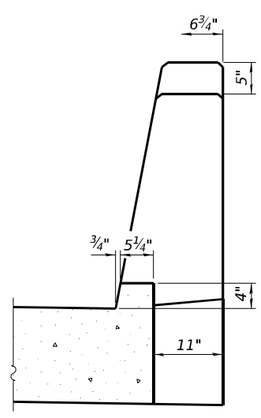

VIEW B-B

* Cost included with Concrete Superstructure (Approach Slab).

** Per manufacturer recommendations

(Sheet 2 of 2)

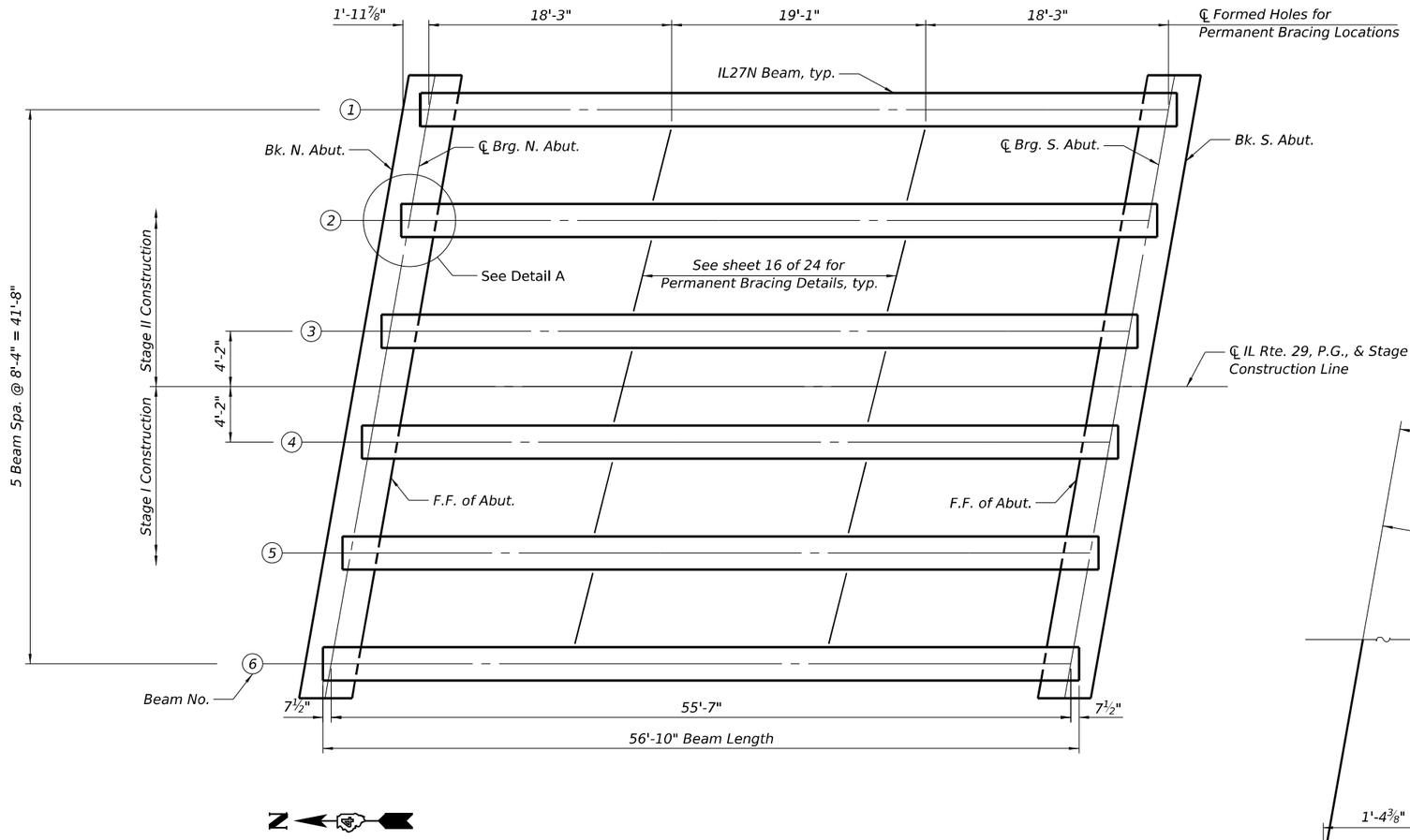

FRAMING PLAN

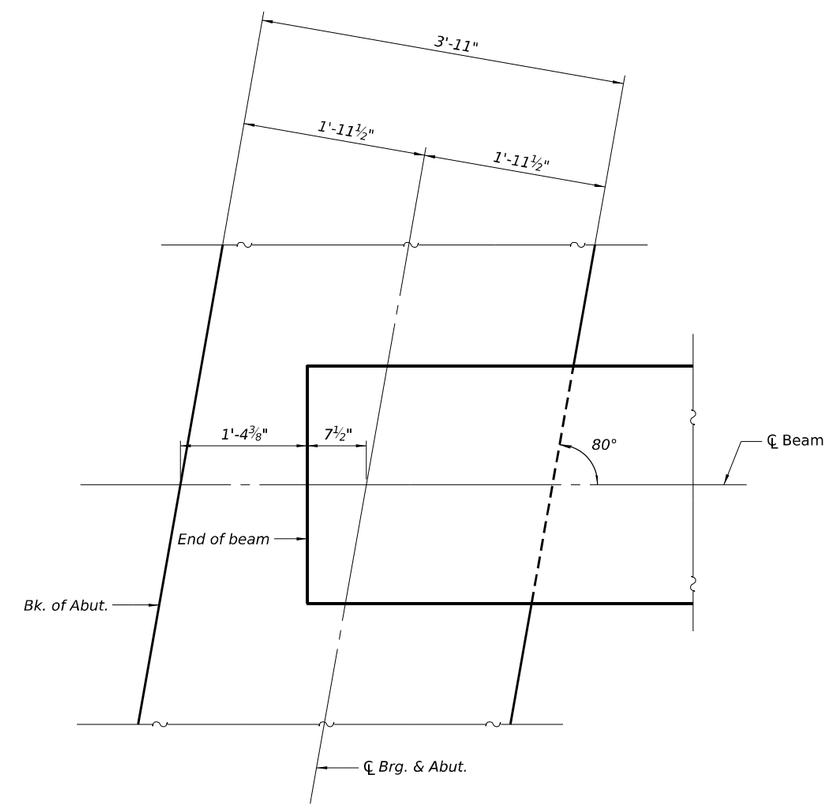

DETAIL A

MODEL: Default
FILE NAME: X:\Projects\Current\192-1373 IDOT D4 PTB193-024 WO16 IL 29 over Barrville\DGN\D468E33-015-Framing Plan.dgn
10/9/2024 2:22:56 PM

Hurst-Rosche, Inc. PROFESSIONAL DESIGN NUMBERS 184-000598 1400 E. TREMONT ST. HILLSBORO, IL PH: 217.532.3959 JOB NO. 192-1373	USER NAME =	DESIGNED - JJC	REVISED -	STATE OF ILLINOIS DEPARTMENT OF TRANSPORTATION	FRAMING PLAN STRUCTURE NO. 062-0074
		CHECKED - CJC	REVISED -		
	PLOT SCALE =	DRAWN - AE	REVISED -		
	PLOT DATE =	CHECKED - JJC	REVISED -		SHEET 15 OF 24 SHEETS

F.A.P. RTE.	SECTION	COUNTY	TOTAL SHEETS	SHEET NO.
318	(3-B) BR	MARSHALL	72	38
		CONTRACT NO. 68E33		
	ILLINOIS	FED. AID PROJECT		

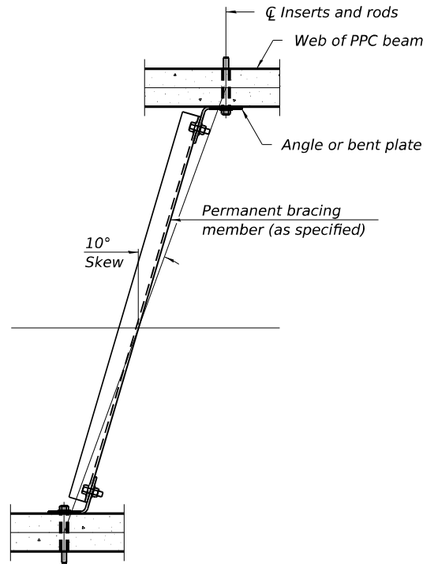

PLAN

INTERIOR BEAM MOMENT TABLE		
		0.5 Sp. 1
I	(in^4)	33,879
I'	(in^4)	139,810
S_b	(in^3)	3,060.4
S_b'	(in^3)	6,261.1
S_t	(in^3)	2,126.7
S_t'	(in^3)	29,942.9
$DC1$	(k/')	1.35
M_{DC1}	('k)	520.7
$DC2$	(k/')	0.175
M_{DC2}	('k)	67.6
DW	(k/')	0.417
M_{DW}	('k)	160.9
$LLDF$		0.697
M_{LL+IM}	('k)	1211.9

INTERIOR BEAM REACTION TABLE		
		Abutments
$LLDF$		.869
OCF		1.037
R_{DC1}	(k)	37.5
R_{DC2}	(k)	4.9
R_{DW}	(k)	11.6
R_{LL+IM}	(k)	95.7
R_{Total} (Strength I)(Impact)	(k)	237.9
R_{Total} (Strength I)(No Impact)	(k)	204.1

I: Non-composite moment of inertia of beam section ($in.^4$).
I': Composite moment of inertia of beam section ($in.^4$).
S_b: Non-composite section modulus for the bottom fiber of the prestressed beam ($in.^3$).
S_b': Composite section modulus for the bottom fiber of the prestressed beam ($in.^3$).
S_t: Non-composite section modulus for the top fiber of the prestressed beam ($in.^3$).
S_t': Composite section modulus for the top fiber of the prestressed beam ($in.^3$).
$DC1$: Un-factored non-composite dead load (kips/ft.).
M_{DC1}: Un-factored moment due to non-composite dead load (kip-ft.).
$DC2$: Un-factored long-term composite (superimposed excluding future wearing surface) dead load (kips/ft.).
M_{DC2}: Un-factored moment due to long-term composite (superimposed excluding future wearing surface) dead load (kip-ft.).
DW: Un-factored long-term composite (superimposed future wearing surface only) dead load (kips/ft.).
M_{DW}: Un-factored moment due to long-term composite (superimposed future wearing surface only) dead load (kip-ft.).
$LLDF$: Live Load Distribution Factor for moment and shear computed according to Article 4.6.2.2 and further IDOT provisions.
M_{LL+IM}: Un-factored live load moment plus dynamic load allowance (impact) (kip-ft.).
OCF: Obtuse Correction Factor computed according to Article 4.6.2.2.3c or as further simplified by IDOT provisions.
R_{DC1}: Un-factored reaction due to non-composite dead load (kip).
R_{DC2}: Un-factored reaction due to long-term composite (superimposed excluding future wearing surface) dead load (kip).
R_{DW}: Un-factored reaction due to long-term composite (superimposed future wearing surface only) dead load (kip).
R_{LL}: Un-factored live load reaction (kip).
R_{IM}: Un-factored dynamic load allowance (impact) (kip).
R_{Total} (Strength I)(Impact): Total factored reaction including dynamic load allowance (impact) kip).
R_{Total} (Strength I)(No Impact): Total factored reaction not including dynamic load allowance (impact) (kip).

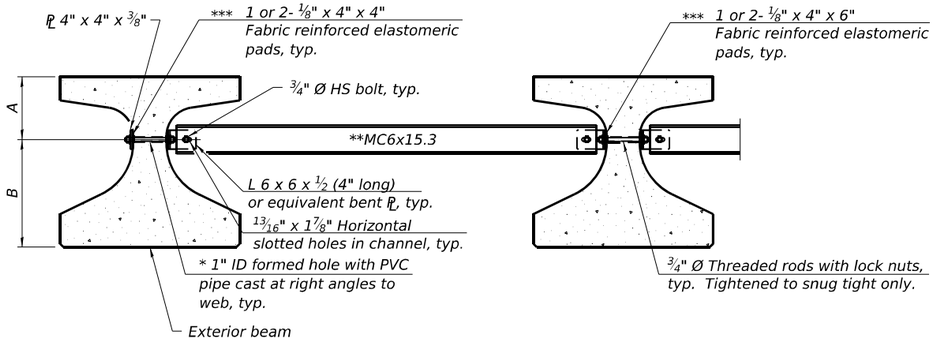

Beam	A	B
IL27	11 1/4"	1'-3 3/4"

Notes:
All material for bracing shall be hot dip galvanized according to AASHTO M111 unless otherwise noted.
Two hardened washers are required for each set of oversized holes.
All holes shall be 15/16" Ø unless otherwise noted.
5/16" x 3" x 3" plate washers are required over all slotted holes.
All bolts, threaded rods, and hardware shall be galvanized according to AASHTO M232.
Threaded rods shall be ASTM F 1554 Grade 55.
Bracing shall be installed as beams are erected and tightened as soon as possible during erection.
Permanent bracing shall not be paid for separately, but shall be included in the cost of Furnishing and Erecting Precast Prestressed Concrete Beams.

* Fabricator shall locate to miss strands within permissible tolerances.

** Alternate MC6x18 channels are permitted to facilitate material acquisition.

*** Place pads as necessary to provide a flat mounting surface between the steel and concrete.

PERMANENT BRACING DETAILS FOR IL27 BEAMS

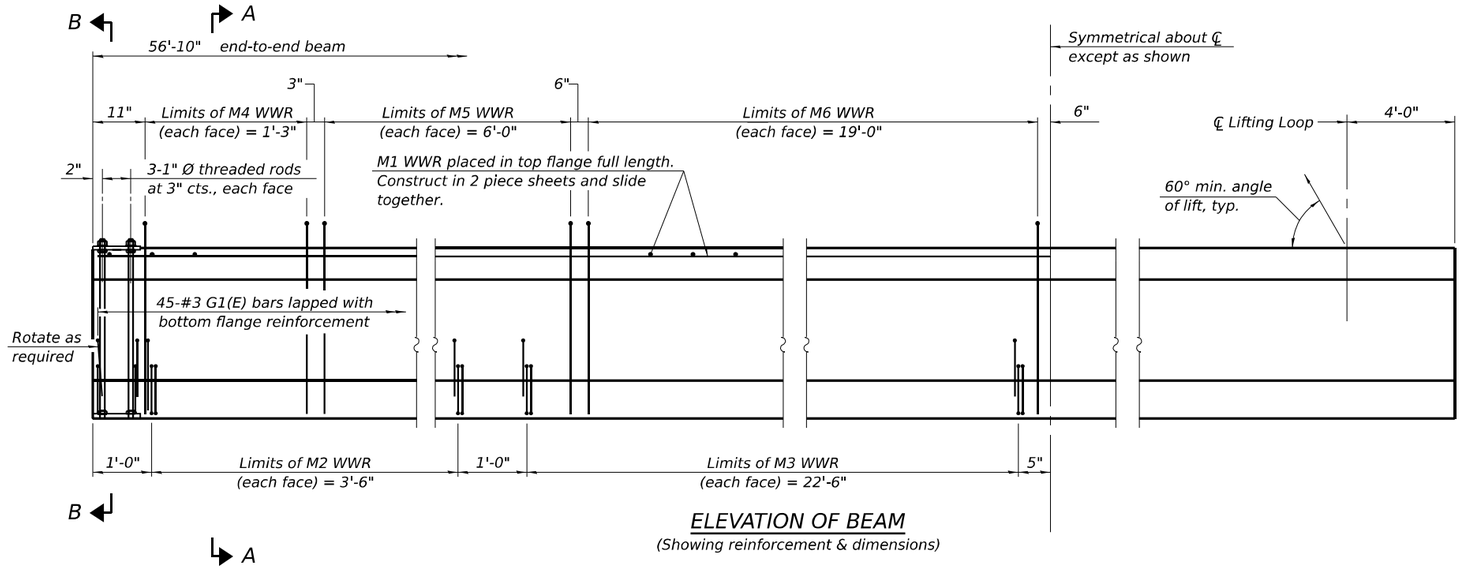

ELEVATION OF BEAM
(Showing reinforcement & dimensions)

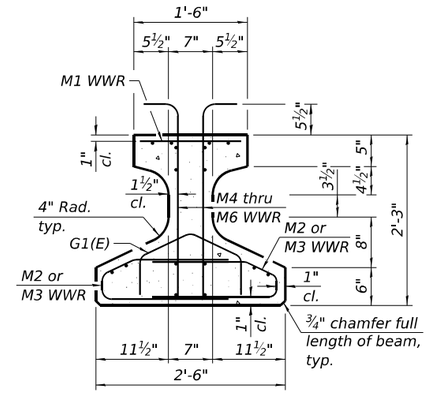

SECTION A-A

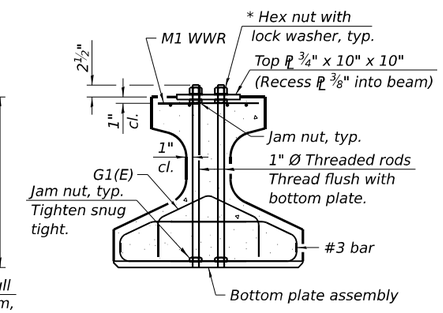

SECTION B-B
* Only tighten sufficiently to compress lock washers

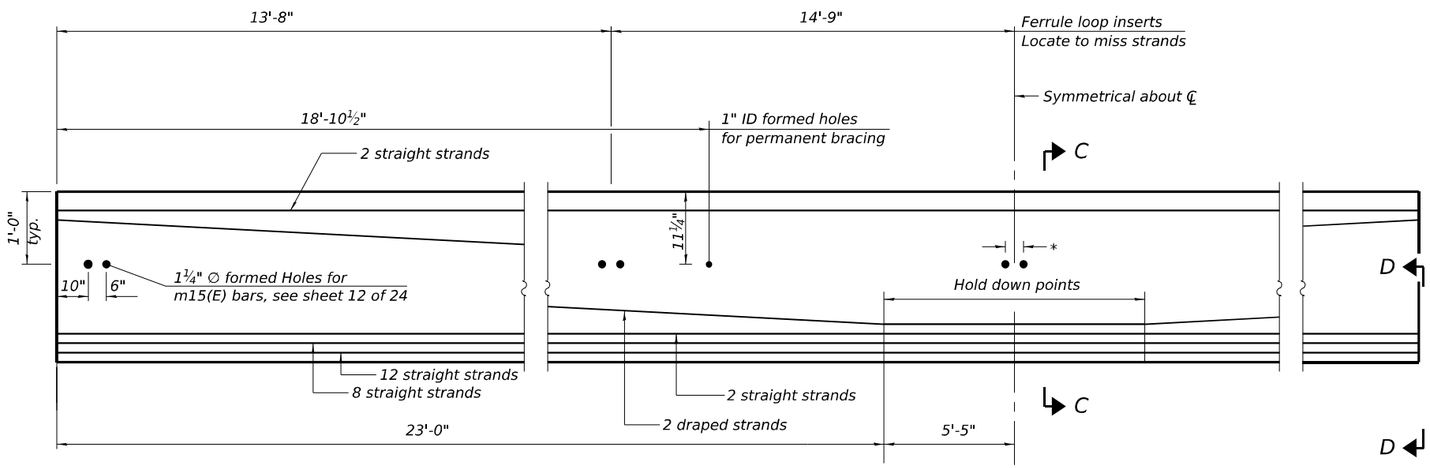

ELEVATION OF BEAM
(Showing prestressing steel)

* Dimensions as required by pipe clamp.
See sheet 11 of 24

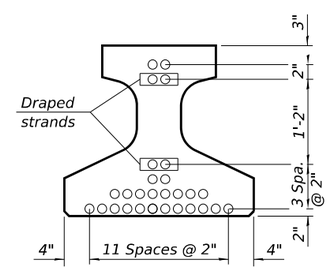

SECTION C-C
(26-0.6" Ø 270 ksi strands)
(Strand Pattern 24B-2T-0db-2d)

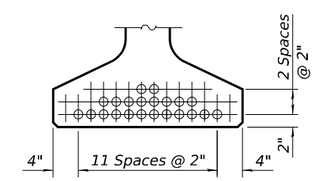

VIEW D-D

○ Fully bonded strand

▲ Partially debonded strand

Note:
See sheet 18 of 24 for additional details and Bill of Material.

IL27-1830 5-15-2023

Hurst-Rosche, Inc. PROFESSIONAL DESIGN FIRM 184-001290 1400 E. TREMONT ST. HILLSBORO, IL PH: 217.532.3959 JOB NO. 192-3091	USER NAME =	DESIGNED - JJC	REVISED -	STATE OF ILLINOIS DEPARTMENT OF TRANSPORTATION	IL27N BEAM STRUCTURE NO. 062-0074	F.A.P. RTE.	SECTION	COUNTY	TOTAL SHEETS / SHEET NO.
		CHECKED - CJC	REVISED -			318	(3-B) BR	MARSHALL	72 / 40
	PLOT SCALE =	DRAWN - AE	REVISED -					CONTRACT NO. 68E33	
	PLOT DATE =	CHECKED - JJC	REVISED -		SHEET 17 OF 24 SHEETS		ILLINOIS	FED. AID PROJECT	

MODEL: Default
FILE NAME: X:\Projects\Current\192-1373 IDOT D4 PTB193-024 WO16 IL 29 over Barrville\DGN\D468E33-017-IL27 Beam.dgn
10/31/2024 9:14:24 AM

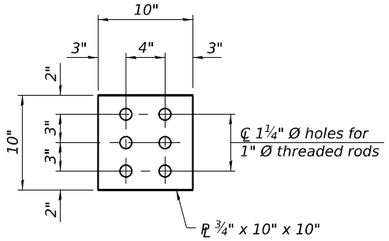

PLAN - TOP PLATE

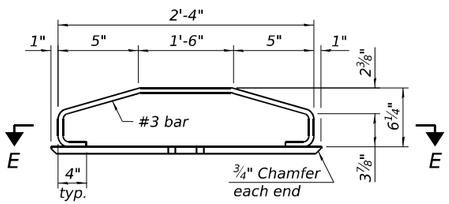

ELEVATION - BOTTOM PLATE ASSEMBLY

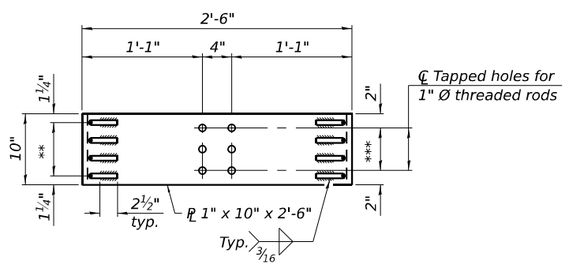

SECTION E-E

** 3 Spaces at 2½" = 7½"

*** 2 Spaces at 3" = 6"

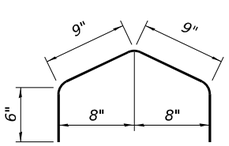

BAR G1(E)

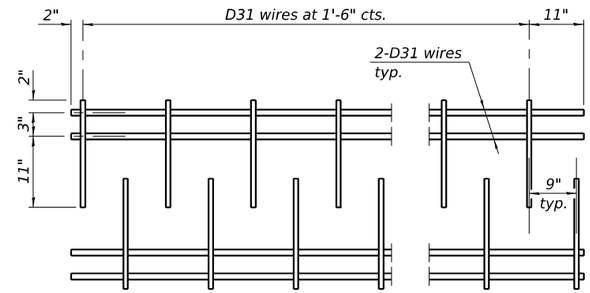

M1 WWR DETAIL

When multiple sheets of M1 WWR are required along the beam length, #5(E) bars (5'-0" long) shall be used to splice the longitudinal D31 wires together (Min. Lap 2'-2").

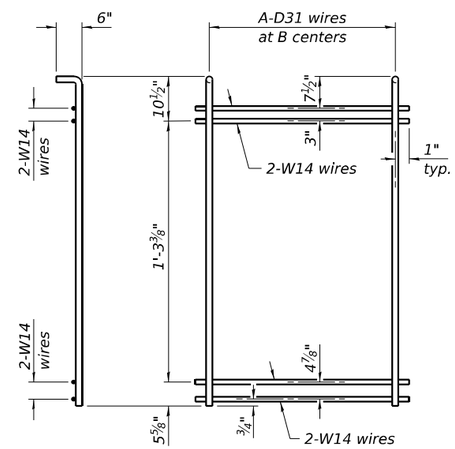

M4 THRU M6 WWR DETAIL

(See Table of Dimensions)

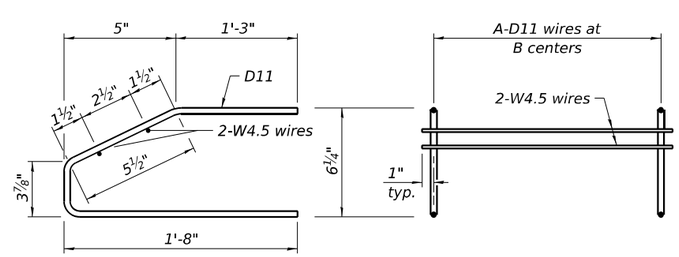

M2 AND M3 WWR DETAIL

(See Table of Dimensions)

NOTES

Inserts for ¾" Ø threaded dowel rods, when specified, are to be two strut, ferrule type for interior beams and single ferrule, flared loop type for exterior beams.

Prestressing steel shall be uncoated high strength, low relaxation 7-wire strand, Grade 270. The nominal diameter for beam strands shall be 0.6" and the nominal cross-sectional area shall be 0.217 sq. in. The nominal diameter for lifting loops shall be ½" and the nominal cross sectional area shall be 0.153 sq. in.

The beams shall have a final concrete compressive strength, f'c, of 8500 psi and a release concrete compressive strength, f'ci, of 6500 psi.

A minimum 2½" Ø lifting pin shall be used to engage the lifting loops during handling.

Bend the extended strands inward on the fascia beams to maintain 1½" clearance inside the pier diaphragm.

The top and bottom plates shall be AASHTO M270 Grade 50.

The top plates and bottom plate assemblies shall be galvanized according to AASHTO M111. The threaded rods, nuts and washers shall be galvanized according to AASHTO M232.

Threaded rods shall be ASTM F 1554 Grade 55.

Welded Wire Reinforcement (WWR) shall conform to ASTM A884 with a Class A, Type 1 epoxy coating or ASTM A1060, Table 3 galvanized coating.

TABLE OF DIMENSIONS

(The WWR designs assume grade 60. If necessary, this permits the fabricator to directly substitute grade 60 rebar as detailed in the Manual for Fabrication of Precast Prestressed Concrete Products.)

SPAN

WWR	A	B
M2	15	3"
M3	32	1'-6"
M4	6	3"
M5	13	6"
M6	20	1'-0"

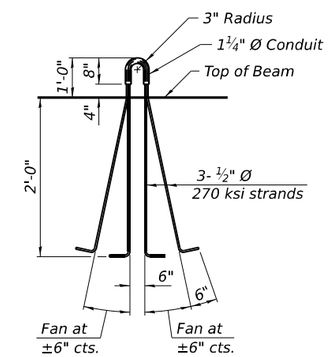

LIFTING LOOP DETAIL

BILL OF MATERIAL

Item	Unit	Total
Furnishing and Erecting Precast Prestressed Concrete Beams, IL27N	Ft.	341

IL27-1830D 5-15-2023

MODEL: Default
FILE NAME: X:\Projects\Current\192-1373 IDOT D4 PTB193-024 WO16 IL 29 over Barrville\DGN\D468E33-018-IL27 Beam Details.dgn
10/3/2024 8:02:32 AM

Hurst-Rosche, Inc.
PROFESSIONAL DESIGN NUMBER: 184-001258
1400 E. TREMONT ST.
HILLSBORO, IL
PH: 217.532.3959
JOB NO. 192-1373

USER NAME =	DESIGNED - JJC	REVISED -	
	CHECKED - CJC	REVISED -	
PLOT SCALE =	DRAWN - AE	REVISED -	
PLOT DATE =	CHECKED - JJC	REVISED -	

STATE OF ILLINOIS
DEPARTMENT OF TRANSPORTATION

IL27N BEAM DETAILS
STRUCTURE NO. 062-0074

SHEET 18 OF 24 SHEETS

F.A. RTE.	SECTION	COUNTY	TOTAL SHEETS	SHEET NO.
318	(3-B) BR	MARSHALL	72	41

CONTRACT NO. 68E33

ILLINOIS FED. AID PROJECT

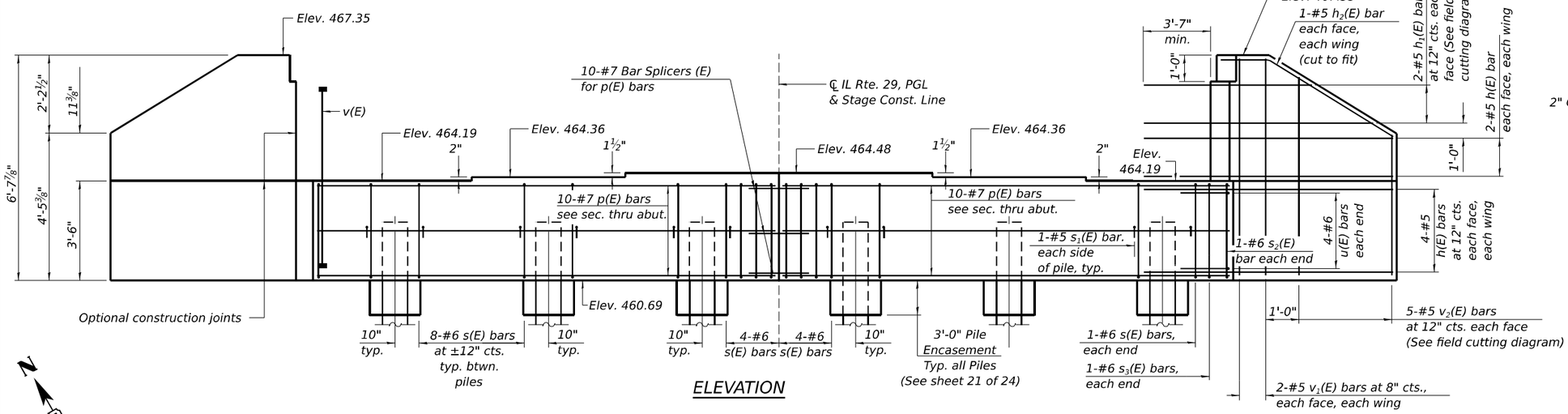

ELEVATION

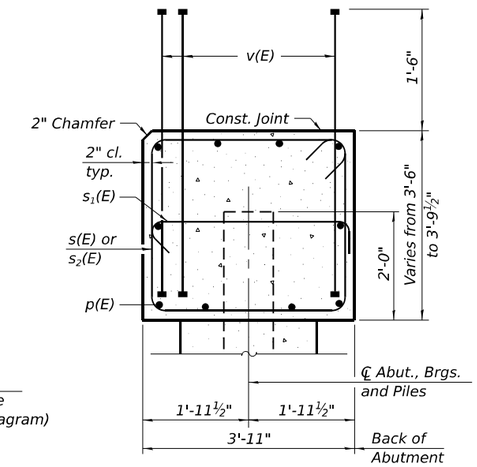

SEC. THRU ABUT.

Dimensions at right angles to abutment.

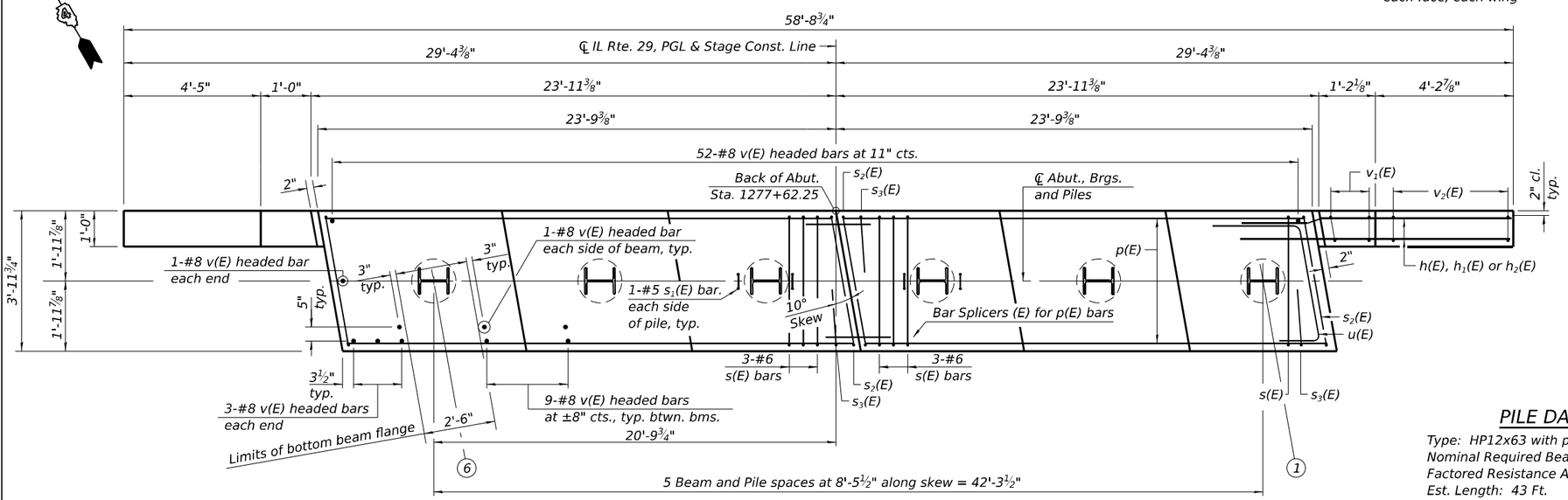

PLAN

PILE DATA

Type: HP12x63 with pile shoes
Nominal Required Bearing: 497 Kips
Factored Resistance Available: 273 Kips
Est. Length: 43 Ft.
No. Production Piles: 5
No. Test Piles: 1

BILL OF MATERIAL

Bar	No.	Size	Length	Shape
h(E)	24	#5	9'-0"	
h_1(E)	4	#5	14'-9"	
h_2(E)	4	#5	5'-9"	
p(E)	20	#7	23'-6"	
s(E)	40	#6	14'-10"	
s_1(E)	12	#5	4'-7"	
s_2(E)	4	#6	15'-0"	
s_3(E)	4	#6	6'-9"	
u(E)	8	#6	12'-2"	
v(E)	117	#8	4'-10"	
v_1(E)	8	#5	6'-4"	
v_2(E)	8	#5	10'-2"	
Structure Excavation		Cu. Yd.	152	
Concrete Structures		Cu. Yd.	27.1	
Concrete Encasement		Cu. Yd.	2.5	
Reinforcement Bars, Epoxy Coated		Pound	4,150	
Furnishing Steel Piles, HP12x63		Foot	215	
Driving Piles		Foot	215	
Test Pile, Steel HP12x63		Each	1	
Pile Shoes		Each	6	
Bar Terminator		Each	234	

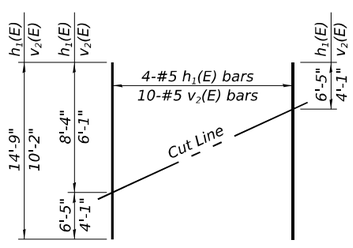

FIELD CUTTING DIAGRAM

Order h_1(E) and v_2(E) full length. Cut as shown and use remainder of bars in opposite wing.

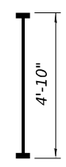

BAR v(E)

(Headed. 234 - #8 Bar Terminators)

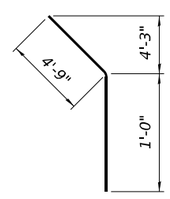

BAR h_2(E)

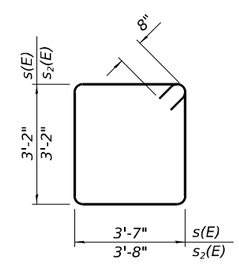

BAR s(E) & s_2(E)

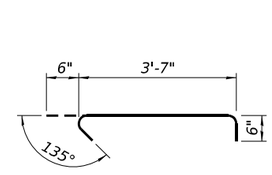

BAR s_1(E)

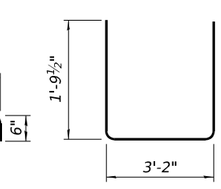

BAR s_3(E)

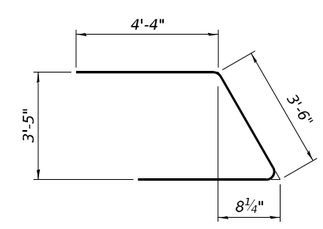

BAR u(E)

Notes:
Pour steps monolithically with cap.
Headed bars shall conform to ASTM A970 with threaded attachment; Class HA; and reinforcement bars conforming to ASTM A706.
For details of piles see sheet 21 of 24.

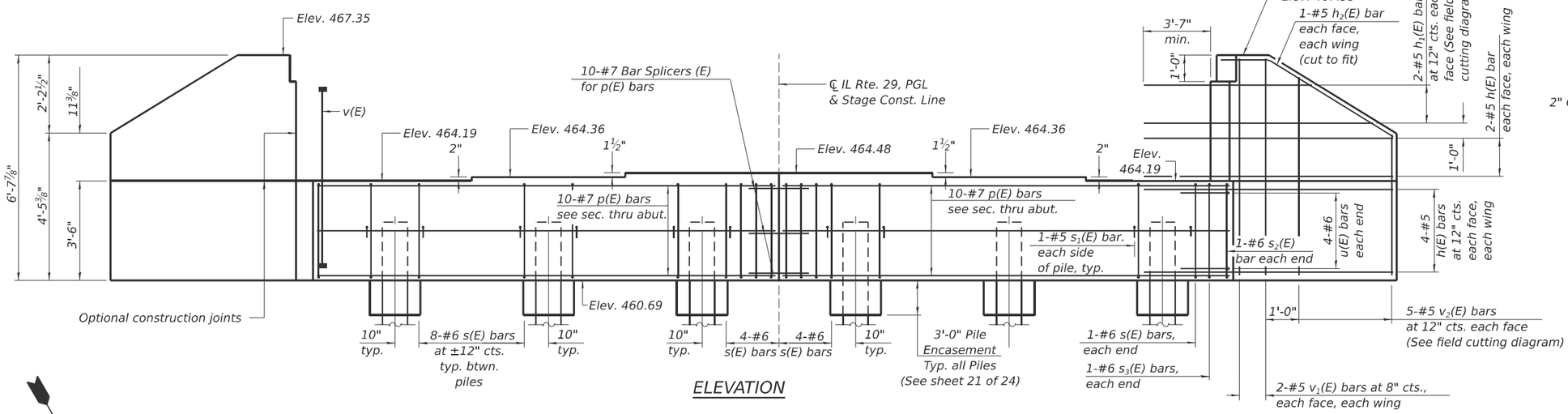

ELEVATION

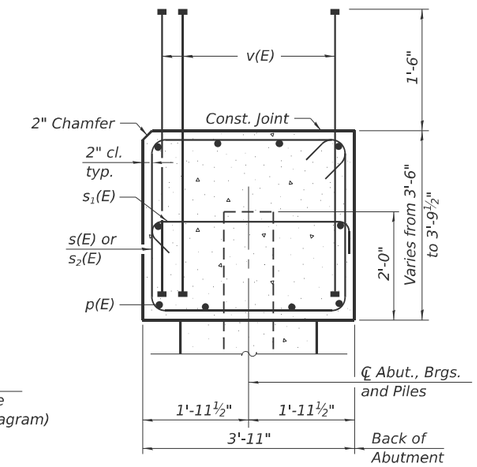

SEC. THRU ABUT.

Dimensions at right angles to abutment.

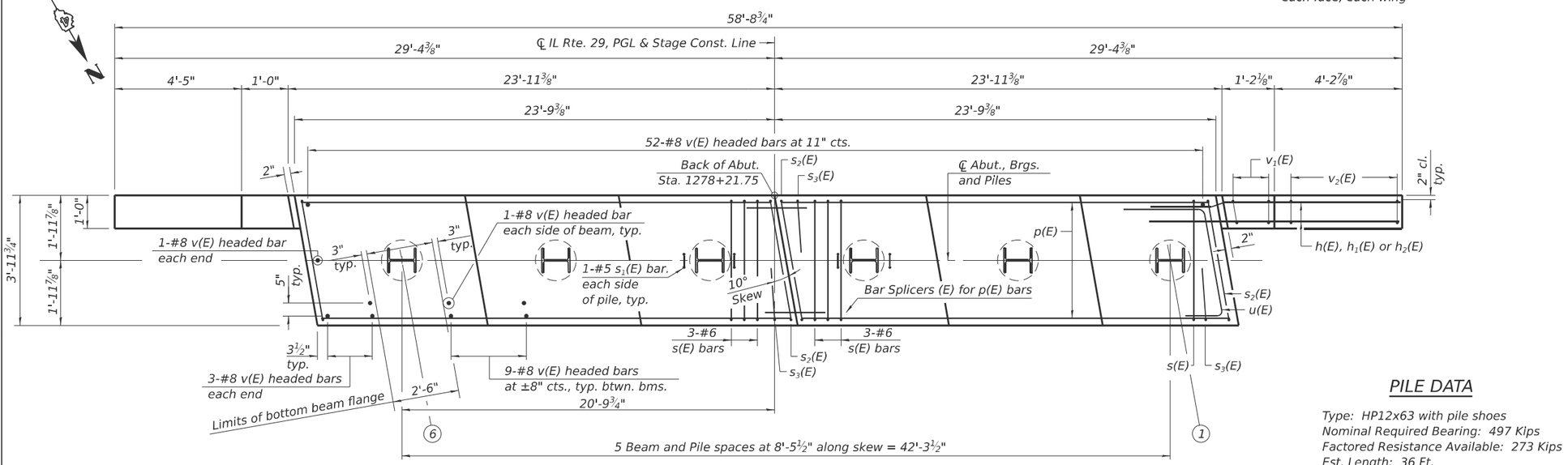

PLAN

PILE DATA

Type: HP12x63 with pile shoes
Nominal Required Bearing: 497 Kips
Factored Resistance Available: 273 Kips
Est. Length: 36 Ft.
No. Production Piles: 6

BILL OF MATERIAL

Bar	No.	Size	Length	Shape
h(E)	24	#5	9'-0"	
h_1(E)	4	#5	14'-9"	
h_2(E)	4	#5	5'-9"	
p(E)	20	#7	23'-6"	
s(E)	40	#6	14'-10"	
s_1(E)	12	#5	4'-7"	
s_2(E)	4	#6	15'-0"	
s_3(E)	4	#6	6'-9"	
u(E)	8	#6	12'-2"	
v(E)	117	#8	4'-10"	
v_1(E)	8	#5	6'-4"	
v_2(E)	8	#5	10'-2"	
Structure Excavation			Cu. Yd.	152
Concrete Structures			Cu. Yd.	27.1
Concrete Encasement			Cu. Yd.	2.5
Reinforcement Bars, Epoxy Coated			Pound	4,150
Furnishing Steel Piles, HP12x63			Foot	216
Driving Piles			Foot	216
Pile Shoes			Each	6
Bar Terminator			Each	234

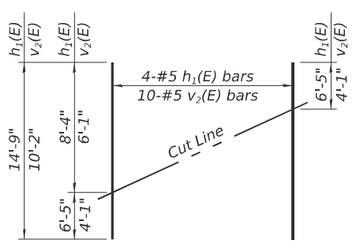

FIELD CUTTING DIAGRAM

Order h_1(E) and v_2(E) full length. Cut as shown and use remainder of bars in opposite wing.

BAR v(E)

(Headed. 234 - #8 Bar Terminators)

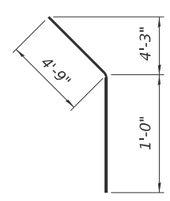

BAR h_2(E)

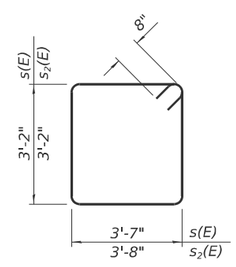

BAR s(E) & s_2(E)

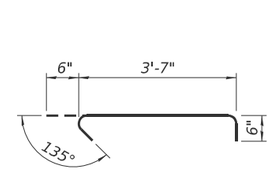

BAR s_1(E)

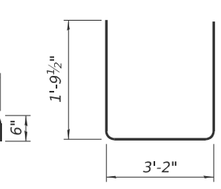

BAR s_3(E)

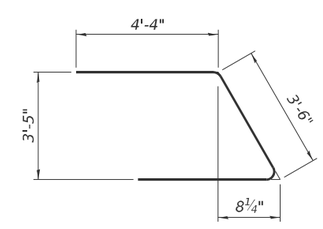

BAR u(E)

Notes:
Pour steps monolithically with cap.
Headed bars shall conform to ASTM A970 with threaded attachment; Class HA; and reinforcement bars conforming to ASTM A706.
For details of piles see sheet 21 of 24.

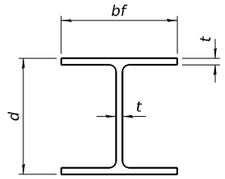

STEEL PILE TABLE

Designation	Depth d	Flange width bf	Web and Flange thickness t	Encasement diameter A
HP 18x181	18	18	1	36"
x157	17¾"	17⅞"	⅞"	36"
x135	17½"	17¾"	¾"	36"
HP 16x183	16½"	16½"	1⅛"	36"
x162	16¼"	16⅛"	1"	36"
x141	16	16	⅞"	36"
x121	15¾"	15⅞"	¾"	36"
HP 14x117	14¼"	14⅞"	13/16"	30"
x102	14"	14¾"	11/16"	30"
x89	13⅞"	14¾"	⅝"	30"
x73	13⅝"	14⅝"	½"	30"
HP 12x84	12¼"	12¼"	11/16"	24"
x74	12⅛"	12¼"	⅝"	24"
x63	12"	12⅛"	½"	24"
x53	11¾"	12"	7/16"	24"
HP 10x57	10"	10¼"	9/16"	24"
x42	9¾"	10⅛"	7/16"	24"
HP 8x36	8"	8⅛"	7/16"	18"

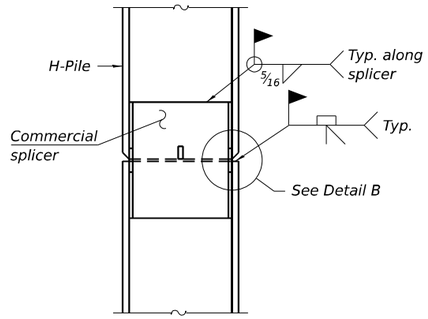

ELEVATION

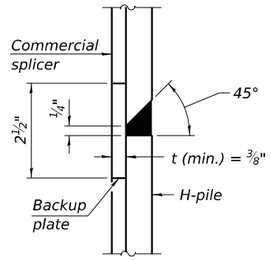

DETAIL B

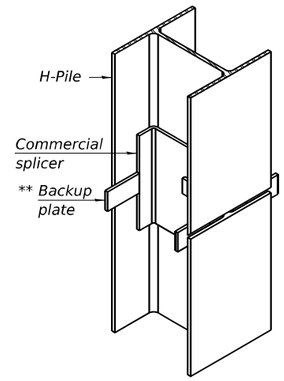

ISOMETRIC VIEW

WELDED COMMERCIAL SPLICE

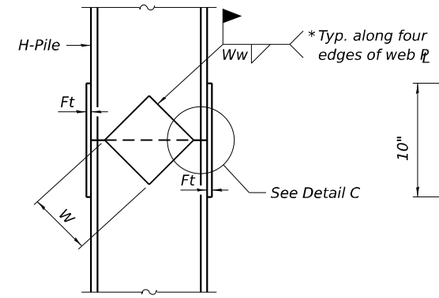

ELEVATION

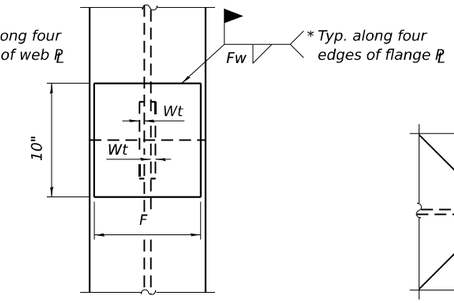

END VIEW

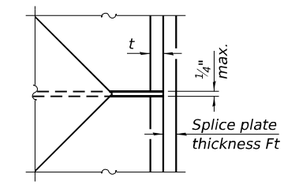

DETAIL C

Designation	F	Ft	Fw	W	Wt	Ww
HP 18x181	15½"	1½"	1"	9½"	⅞"	¾"
x157	15¼"	1¼"	1"	9½"	⅞"	¾"
x135	15¼"	1¼"	1"	9½"	⅞"	¾"
HP 16x183	13¾"	1½"	1"	8¼"	⅞"	¾"
x162	13½"	1½"	1"	8¼"	¾"	⅝"
x141	13½"	1¼"	⅞"	8¼"	¾"	⅝"
x121	13½"	1¼"	⅞"	8¼"	¾"	⅝"
HP 14x117	12½"	1¼"	⅞"	7¾"	⅝"	½"
x102	12½"	1"	¾"	7¾"	⅝"	½"
x89	12½"	⅞"	11/16"	7¾"	⅝"	½"
x73	12½"	¾"	9/16"	7¾"	⅝"	½"
HP 12x84	10"	1"	11/16"	6½"	⅝"	½"
x74	10"	⅞"	11/16"	6½"	⅝"	½"
x63	10"	¾"	½"	6½"	½"	⅜"
x53	10"	¾"	½"	6½"	½"	⅜"
HP 10x57	8"	⅞"	9/16"	5¼"	½"	⅜"
x42	8"	¾"	9/16"	5¼"	½"	⅜"
HP 8x36	6¾"	⅝"	7/16"	4"	½"	⅜"

WELDED PLATE FIELD SPLICE

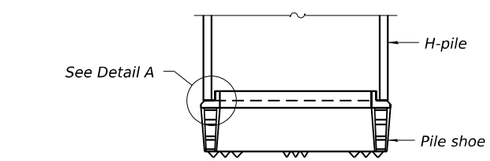

ELEVATION

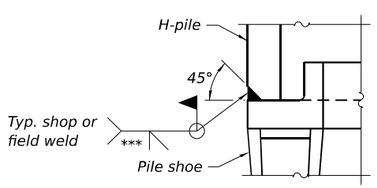

DETAIL A

SHOE ATTACHMENT

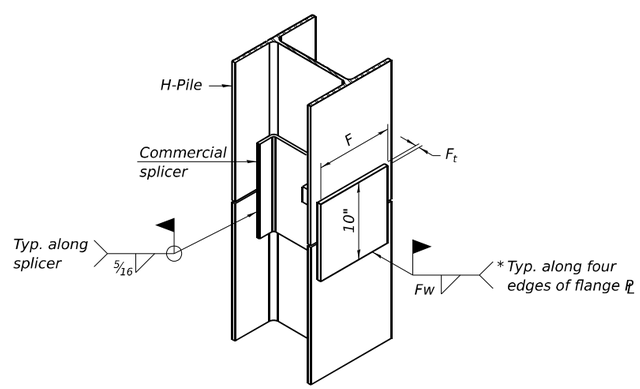

ISOMETRIC VIEW

WELDED COMMERCIAL SPLICE ALTERNATE

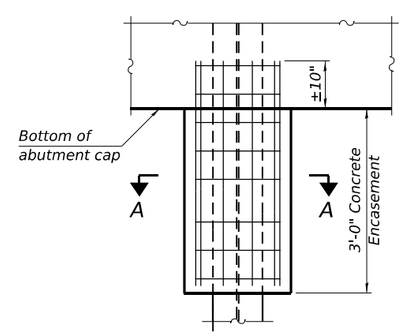

ELEVATION

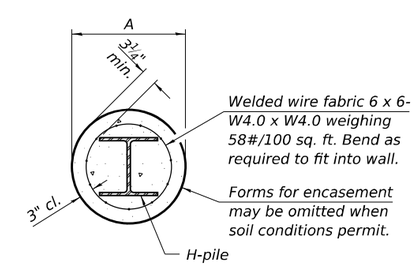

SECTION A-A

INDIVIDUAL PILE CONCRETE ENCASEMENT
(when specified)

Note:
The steel H-piles shall be according to AASHTO M270 Grade 50.

* Interrupt welds ¼" from end of web and/or each flange.

** Remove portions of backup plates that extend outside the flanges.

*** Weld size per pile shoe manufacturer (5/16" min.).

F-HP 10-27-2023

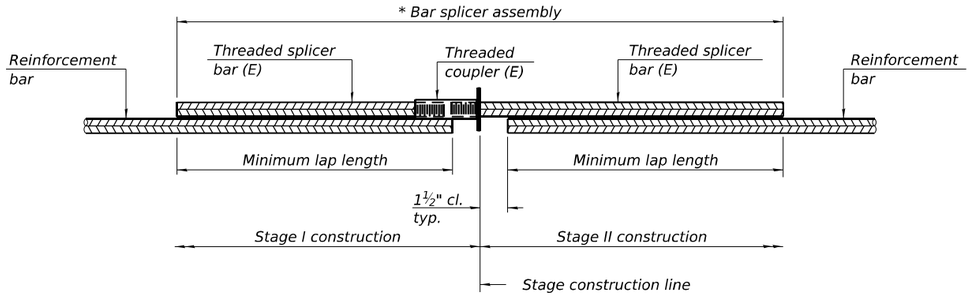

STANDARD BAR SPLICER ASSEMBLY PLAN

Only bar splicer assemblies as presented on the approved QPL list may be used.

Threaded splicer bar length = min. lap length + 1½" + thread length

* Epoxy not required on Bar Splicer Assembly components used in conjunction with black bars.

Location	Bar size	No. assemblies required	Minimum lap length
Deck Slab Top	5	128	3'-6"
Deck Slab Bottom	5	80	3'-6"
Approach Slab Top	5	90	3'-6"
Approach Slab Bottom	8	120	5'-6"
Approach Slab Footing	5	80	3'-6"
Abutment Caps	7	20	4'-6"
Diaphragm, Back Face	6	8	4'-0"
Diaphragm, Front Face	6	6	4'-0"

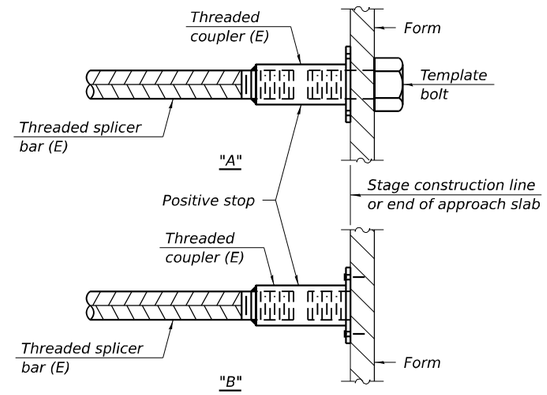

INSTALLATION AND SETTING METHODS

"A" : Set bar splicer assembly by means of a template bolt.
"B" : Set bar splicer assembly by nailing to wood forms or cementing to steel forms.
(E) : Indicates epoxy coating.

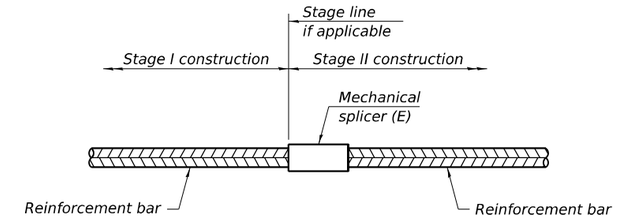

STANDARD MECHANICAL SPLICER

Location	Bar size	No. assemblies required

Notes:
Splicer bars shall be deformed with threaded ends and have a minimum 60 ksi yield strength.
All reinforcement shall be lapped and tied to the splicer bars.
Bar splicer assemblies shall be epoxy coated according to the requirements for reinforcement bars. See Section 508 of the Standard Specifications.
See approved list of bar splicer assemblies and mechanical splicers for alternatives.

BSD-1 5-15-2023

Illinois Department of Transportation
Division of Highways
IDOT

SOIL BORING LOG

Date 9/23/21

ROUTE FAP 318 (IL 29) DESCRIPTION Structure boring for north abutment LOGGED BY JS (Terracon)

SECTION (3-B) BR LOCATION IL-29 over Barrville Creek, SEC. 26, TWP. 12 N, RNG. 9, 4th PM,
Latitude 40.9973, Longitude -89.4432

COUNTY Marshall County DRILLING METHOD Mud Rotary HAMMER TYPE Automatic

STRUCT. NO. 062-0008 (EX) 062-0074 (PR)
Station 1277+92

BORING NO. SB-1
Station 1277+67
Offset 18.0 ft RT
Ground Surface Elev. 467.40 ft

Surface Water Elev. ft
Stream Bed Elev. ft

Groundwater Elev.:
First Encounter 458.9 ft ▼
Upon Completion 456.9 ft ▽
After ___ Hrs. ft

Description	Elev.	DEPTH (ft)	BLOWS (/6")	UCS Qu (tsf)	MOIST (%)
Asphalt, approximate thickness of 2"	467.20				
Concrete, approximate thickness of 16"	465.90		5		
FILL: Silty Loam, trace gravel, brown, very moist			4 4		17
	463.40		4		
Clay, brown, stiff		5	4 4	1.2 B	26
			3		
			3 3	1.1 B	25
			3		
		-10	3 3	1.6 B	23
	456.40 ▽				
Silt Loam, brown, medium stiff, moist to very moist			3 5 5		17
			2		
		-15	2 3		13
			5		
No Recovery from 16.5 to 19.5			3 1		-
			1		
	447.40	-20	3 4		15
Silt Loam, with gravel and cobbles, brown, medium stiff to stiff, very moist			5		
			6 8		14
			3		
		-25	3 4		15
			4		
	440.40		3 2		26
Silty Clay Loam, brown, stiff, wet to very moist			3		
		-30	5 6		16
			1		
	432.90	-35	3 6		12
Sandy Clay Loam, with gravel and coal, brown to black, loose, moist					
	429.40				
Sand, brown, medium dense, moist			12		
		-40	8 11		12

The Unconfined Compressive Strength (UCS) Failure Mode is indicated by (B-Bulge, S-Shear, P-Penetrometer)
The SPT (N value) is the sum of the last two blow values in each sampling zone (AASHTO T206)

BBS, form 137 (Rev. 8-99)

Illinois Department of Transportation
Division of Highways
IDOT

SOIL BORING LOG

Date 9/23/21

ROUTE FAP 318 (IL 29) DESCRIPTION Structure boring for north abutment LOGGED BY JS (Terracon)

SECTION (3-B) BR LOCATION IL-29 over Barrville Creek, SEC. 26, TWP. 12 N, RNG. 9, 4th PM,
Latitude 40.9973, Longitude -89.4432

COUNTY Marshall County DRILLING METHOD Mud Rotary HAMMER TYPE Automatic

STRUCT. NO. 062-0008 (EX) 062-0074 (PR)
Station 1277+92

BORING NO. SB-1
Station 1277+67
Offset 18.0 ft RT
Ground Surface Elev. 467.40 ft

Surface Water Elev. ft
Stream Bed Elev. ft

Groundwater Elev.:
First Encounter 458.9 ft ▼
Upon Completion 456.9 ft ▽
After ___ Hrs. ft

Description	Elev.	DEPTH (ft)	BLOWS (/6")	UCS Qu (tsf)	MOIST (%)
Sand, brown, medium dense, moist *(continued)*	426.40				
Shale, highly weathered, gray, hard, very moist to wet					
			50/3"		14
		-45			
			50/2"		20
		-50			
	413.90				
Coal Seam, black, hard, wet			50/3"		24
	412.40	-55			
End of Boring					
		-60			

The Unconfined Compressive Strength (UCS) Failure Mode is indicated by (B-Bulge, S-Shear, P-Penetrometer)
The SPT (N value) is the sum of the last two blow values in each sampling zone (AASHTO T206)

BBS, form 137 (Rev. 8-99)

MODEL: Default
FILE NAME: X:\Projects\Current\192-1373 IDOT D4 PTB193-024 WO16 IL 29 over Barrville\DGN\D468E33-023-Boring Logs.dgn

Hurst-Rosche, Inc.
PROFESSIONAL DESIGN NUMBER: 184-000509
1400 E. TREMONT ST.
HILLSBORO, IL
PH: 217.532.3959
JOB NO. 192-1373

USER NAME =	DESIGNED - JJC	REVISED -	
	CHECKED - CJC	REVISED -	
PLOT SCALE =	DRAWN - AE	REVISED -	
PLOT DATE =	CHECKED - JJC	REVISED -	

STATE OF ILLINOIS
DEPARTMENT OF TRANSPORTATION

BORING LOGS (SHEET 1 OF 2)
STRUCTURE NO. 062-0074

SHEET 23 OF 24 SHEETS

F.A. RTE.	SECTION	COUNTY	TOTAL SHEETS	SHEET NO.
318	(3-B) BR	MARSHALL	72	46
		CONTRACT NO. 68E33		
	ILLINOIS	FED. AID PROJECT		

8/8/2024 9:53:00 AM

Illinois Department of Transportation
Division of Highways
IDOT

SOIL BORING LOG

Date 9/23/21

ROUTE FAP 318 (IL 29) DESCRIPTION Structure boring for south abutment LOGGED BY JS (Terracon)

SECTION (3-B) BR LOCATION IL-29 over Barrville Creek, SEC. 26, TWP. 12 N, RNG. 9, 4th PM,
Latitude 40.9972, Longitude -89.4431

COUNTY Marshall County DRILLING METHOD Mud Rotary HAMMER TYPE Automatic

STRUCT. NO. 062-0008 (EX) 062-0074 (PR)
Station 1277+92

BORING NO. SB-2
Station 1278+28
Offset 16.0 ft LT
Ground Surface Elev. 467.40 ft

Surface Water Elev. ft
Stream Bed Elev. ft

Groundwater Elev.:
First Encounter 459.9 ft ▼
Upon Completion 457.4 ft ▽
After ___ Hrs. ft

Description	Elev.	DEPTH (ft)	BLOWS (/6")	UCS Qu (tsf)	MOIST (%)
Asphalt, approximate thickness of 13"	466.30				
FILL: Silt Loam, trace gravel, brown and orange			1		
			4		16
			2		
			1		
			1		24
		5	2		
Silt Loam, trace gravel, brown, medium stiff, very moist to wet	461.40		4		
			4		16
			4		
			4		
			3		22
		-10	3		
Silt, brown, very soft, wet	456.90		0		
			0		30
			0		
			0		
			0		25
		-15	1		
Silt Loam, trace gravel, brown, wet, medium stiff	450.90		1		
			2		20
			3		
Clay, trace gravel, medium stiff to soft	448.40		0		
		-20	2	1.0	26
			2	B	
Clay, trace gravel, medium stiff to soft *(continued)*			0		
			0	dist.	22
			2		
Sandy Loam, brown, loose to medium dense, wet	443.90		4		
			3		23
		-25	4		
			8		
			6		18
			8		
			10		
			8		13
		-30	6		
Shale, slightly weathered, gray, hard, wet	434.40		50		
			50/2"		19
		-35			
			50/4"		16
		-40			

The Unconfined Compressive Strength (UCS) Failure Mode is indicated by (B-Bulge, S-Shear, P-Penetrometer)
The SPT (N value) is the sum of the last two blow values in each sampling zone (AASHTO T206)

BBS, form 137 (Rev. 8-99)

Illinois Department of Transportation
Division of Highways
IDOT

SOIL BORING LOG

Date 9/23/21

ROUTE FAP 318 (IL 29) DESCRIPTION Structure boring for south abutment LOGGED BY JS (Terracon)

SECTION (3-B) BR LOCATION IL-29 over Barrville Creek, SEC. 26, TWP. 12 N, RNG. 9, 4th PM,
Latitude 40.9972, Longitude -89.4431

COUNTY Marshall County DRILLING METHOD Mud Rotary HAMMER TYPE Automatic

STRUCT. NO. 062-0008 (EX) 062-0074 (PR)
Station 1277+92

BORING NO. SB-2
Station 1278+28
Offset 16.0 ft LT
Ground Surface Elev. 467.40 ft

Surface Water Elev. ft
Stream Bed Elev. ft

Groundwater Elev.:
First Encounter 459.9 ft ▼
Upon Completion 457.4 ft ▽
After ___ Hrs. ft

Description	Elev.	DEPTH (ft)	BLOWS (/6")	UCS Qu (tsf)	MOIST (%)
Shale, slightly weathered, gray, hard, wet *(continued)*			50/4"		17
End of Boring	422.40	-45			
		-50			
		-55			
		-60			

The Unconfined Compressive Strength (UCS) Failure Mode is indicated by (B-Bulge, S-Shear, P-Penetrometer)
The SPT (N value) is the sum of the last two blow values in each sampling zone (AASHTO T206)

BBS, form 137 (Rev. 8-99)

MODEL: Default
FILE NAME: X:\Projects\Current\192-1373 IDOT D4 PTB193-024 WO16 IL 29 over Barrville\DGN\D488E33-024-Boring Logs.dgn
8/30/2024 11:03:57 AM

Hurst-Rosche, Inc.
PROFESSIONAL DESIGN NUMBER: 184-000282
1400 E. TREMONT ST.
HILLSBORO, IL
PH: 217.532.3959
JOB NO. 192-1373

USER NAME =	DESIGNED - JJC	REVISED -	
	CHECKED - CJC	REVISED -	
PLOT SCALE =	DRAWN - AE	REVISED -	
PLOT DATE =	CHECKED - JJC	REVISED -	

STATE OF ILLINOIS
DEPARTMENT OF TRANSPORTATION

BORING LOGS (SHEET 2 OF 2)
STRUCTURE NO. 062-0074

SHEET 24 OF 24 SHEETS

F.A. RTE.	SECTION	COUNTY	TOTAL SHEETS	SHEET NO.
318	(3-B) BR	MARSHALL	72	47

CONTRACT NO. 68E33
ILLINOIS FED. AID PROJECT

ROUTE NO.	SECTION	COUNTY	TOTAL SHEETS	SHEET NO.
F.A. 63	(3B)I	MARSHALL	223	86

SHEET 1
4 SHEETS

B. M. - 11-233 USC & GS East End of South Abutment
Sta. 1278+16, 25' Rt.
Elev. 468.06

Exist. Str. No. 062-0008

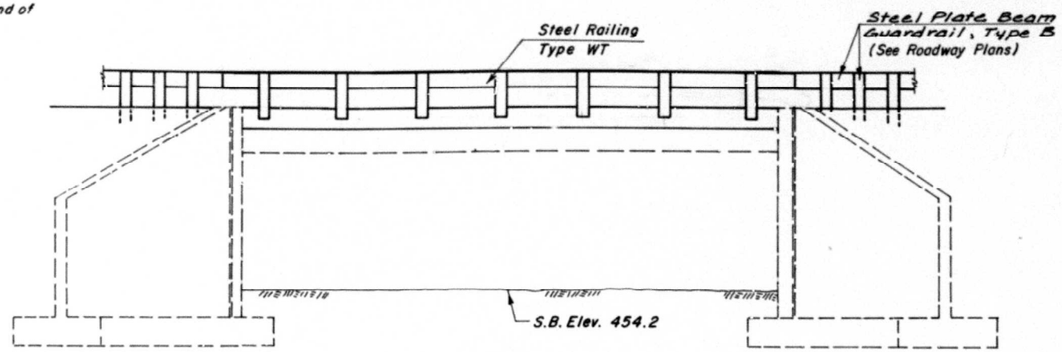

ELEVATION

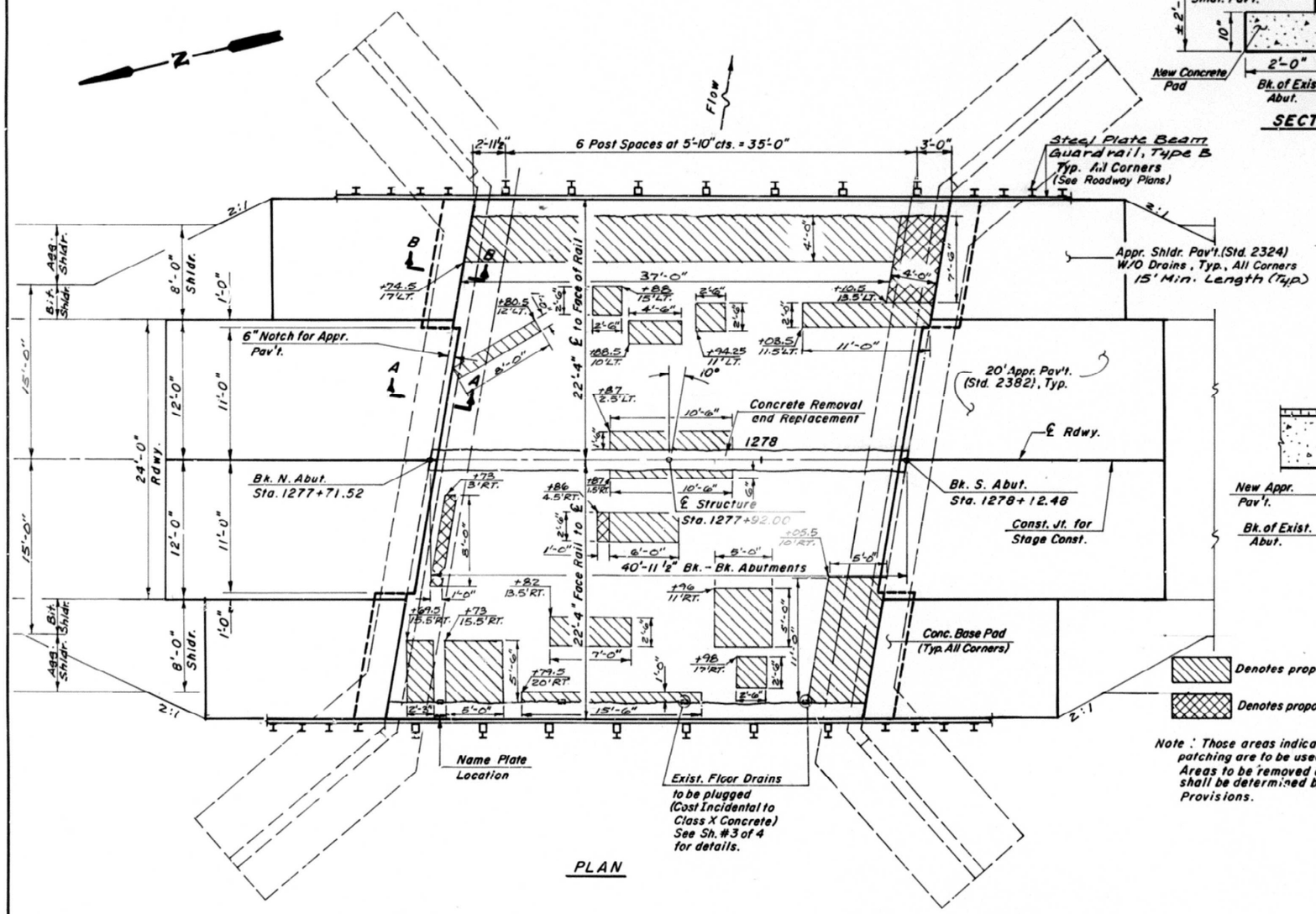

PLAN

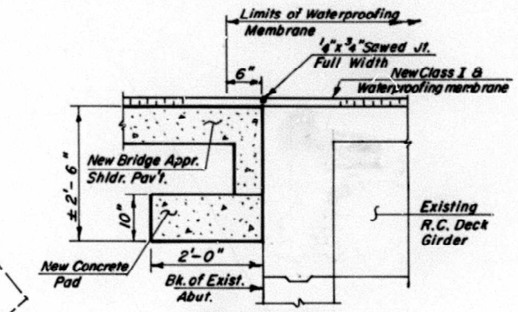

SECTION B-B

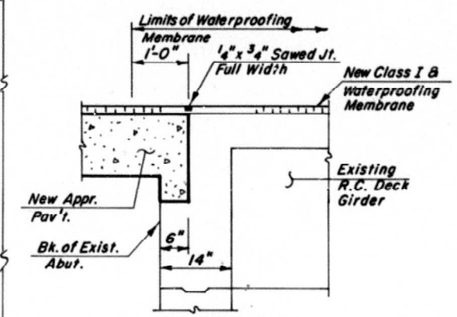

SECTION A-A

APPROVED
FOR STRUCTURAL ADEQUACY ONLY
Ralph E. Anderson
Engineer of Bridges and Structures

JAMES O. HAMILTON
081-003660
LICENSED STRUCTURAL ENGINEER OF JACKSONVILLE
ILLINOIS

James O. Hamilton
3/22/91
Lic. Expires 11/30/92

GENERAL NOTES

Plan dimensions and details relative to existing structure have been taken from existing plans and are subject to nominal construction variations. It shall be the Contractor's responsibility to verify such dimensions and details in the field and make necessary approved adjustments prior to construction or ordering of materials. Such variations shall not be cause for additional compensation for a change in the scope of the work, however, the Contractor will be paid for the quantity actually placed at the unit price bid for the work.

Expansion bolts shall consist of approved expansion anchors, providing minimum certified proof load = 4,080 lbs., and ¾"ϕ x 12" or ¾"ϕ x 6" hooked bolts as noted in plans.

NOTE: METHOD 1 DECK REPAIR SHALL BE USED.

STATION 1277+92.00
REBUILT 199 BY
STATE OF ILLINOIS
F.A.P. RTE. 63 SEC. (3B)I
F.A. PROJ. F-318(1)
LOADING HS20
STR. NO. 062-0008

NAME PLATES
See Std. 2113

TOTAL BILL OF MATERIAL

ITEM	UNIT	QUANTITY
Concrete Removal	Cu. Yd.	15
Class X Concrete	Cu. Yd.	8.8
Reinforcement Bars, Epoxy Coated	Pound	1110
Expansion Bolts ¾"ϕ x 12"	Each	42
Name Plates	Each	1
Bituminous Surface Course, Class I	Ton	18
Waterproofing Membrane System	Sq. Yd.	214
Deck Slab Repair (Partial)	Sq. Yd.	44
Bituminous Concrete Surface Removal	Sq. Yd.	192
Steel Railing, Type WT	Lin. Ft.	82
Deck Slab Repair (Full Depth, Type I)	Sq. Yd.	5

Denotes proposed partial depth patching

Denotes proposed full depth patching

Note: Those areas indicated on plan for partial and full depth patching are to be used only as a guide for bidding. Areas to be removed and partial and full depth patching shall be determined by the Engineer. See Special Provisions.

CASLER, HOUSER & HUTCHISON INC.
CONSULTING ENGINEERS
JACKSONVILLE ILLINOIS

GENERAL PLAN
F.A.P. 63 OVER BARRVILLE CREEK
SECTION (3B)I
MARSHALL COUNTY
STATION 1277+92
STR. NO. 062-0008

ROUTE NO.	SECTION	COUNTY	TOTAL SHEETS	SHEET NO.
CA. 63	(3B)I	MARSHALL	223	87

SHEET 2
4 SHEETS

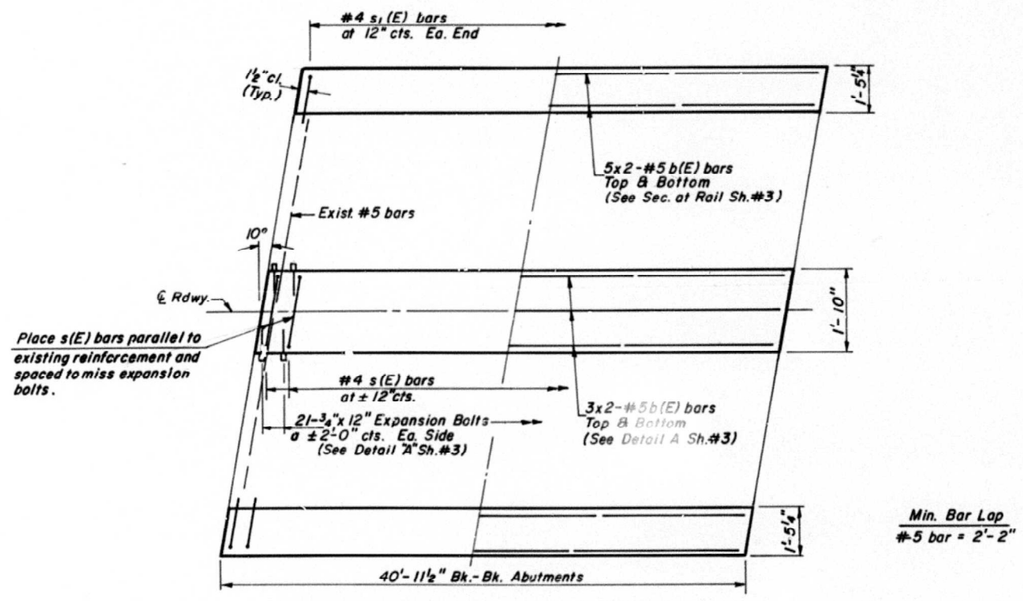

PLAN VIEW

See Sheet #3 For Additional Details

Min. Bar Lap
#5 bar = 2'-2"

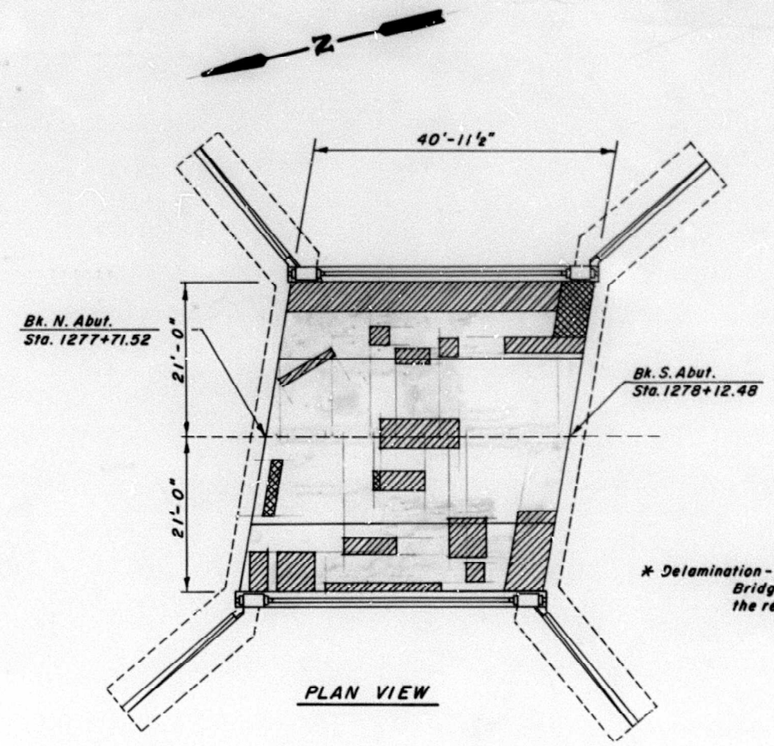

* Delamination - A horizontal fracture of Bridge Deck occurring at or above the reinforcing steel.

PLAN VIEW

LEGEND	AREAS	(SQ. FT.)
Subsurface Delamination Half Depth	Total Area	1,718.8
Subsurface Delamination Full Depth	Half Depth Delamination	404.0
	Full Depth Delamination	41.0

Inspection Date --- 10/25/90

FOR INFORMATION ONLY

NOTE: METHOD 1 DECK REPAIR SHALL BE USED.

F.A.P. 63 OVER BARRVILLE CREEK
SECTION (3B)I
MARSHALL COUNTY
STATION 1277+92
STR. NO. 062-0008

ROUTE NO.	SECTION	COUNTY	TOTAL SHEETS	SHEET NO.
F.A. 63	(3B) I	MARSHALL	223	88

SHEET 3
4 SHEETS

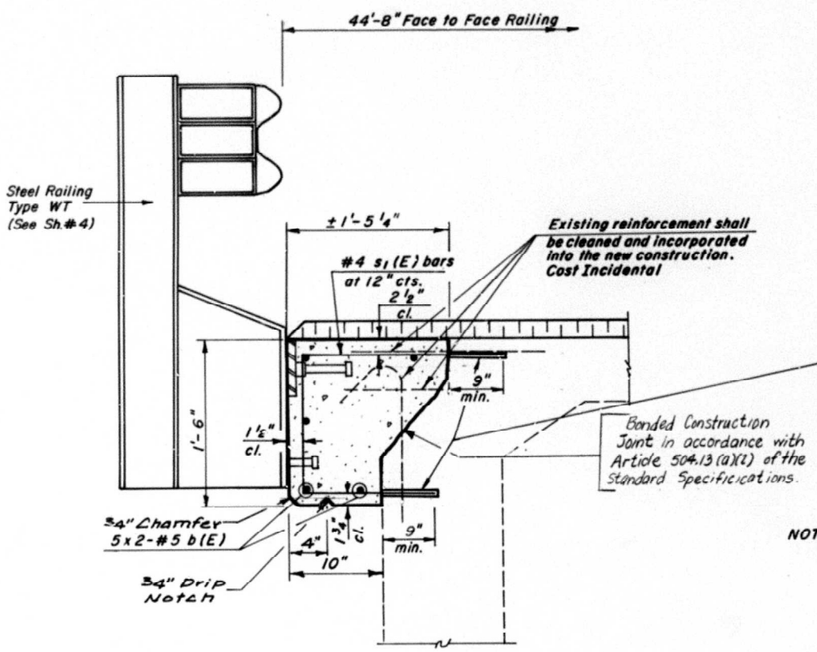

SECTION AT RAIL

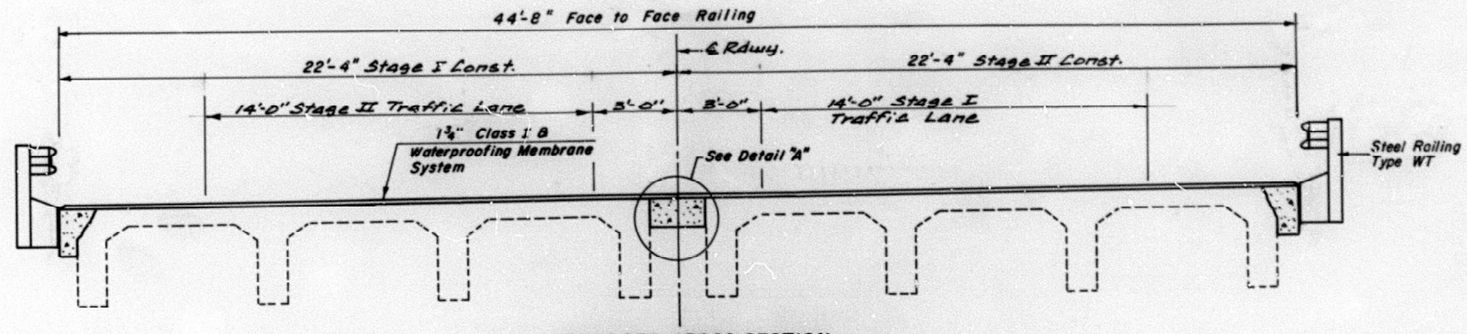

PROPOSED CROSS SECTION
(LOOKING NORTH)

Remove all existing bituminous concrete wearing surface on bridge deck.

The existing deck shall be cleaned in accordance with the Standard Specifications as directed by the Engineer.

NOTE: Epoxy grout #5 s(E) bars in ⅞"ϕ x 9" minimum drilled holes. (Use a grout approved by the Department or epoxy coat in accordance with BSP-11 (See Special Provisions). The method of grout application shall be approved by the Engineer).

*NOTE: Hole diameter = bar diameter + ¼"

NOTES: Bars indicated thus 1x2-#5 etc. indicates 1 line of bars with 2 lengths per line.
Reinforcement bars designated (E) shall be epoxy coated.

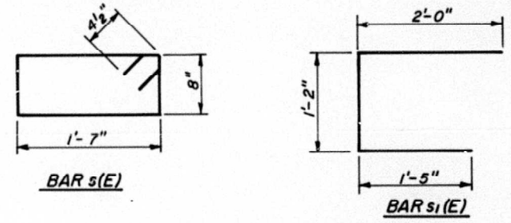

BAR s(E)

BAR s1(E)

NOTE: Existing transverse reinforcement bars that are damaged by Contractor during the removal phase shall be replaced with ¾"ϕ x 12" Expansion Bolt at the Contractor's expense.

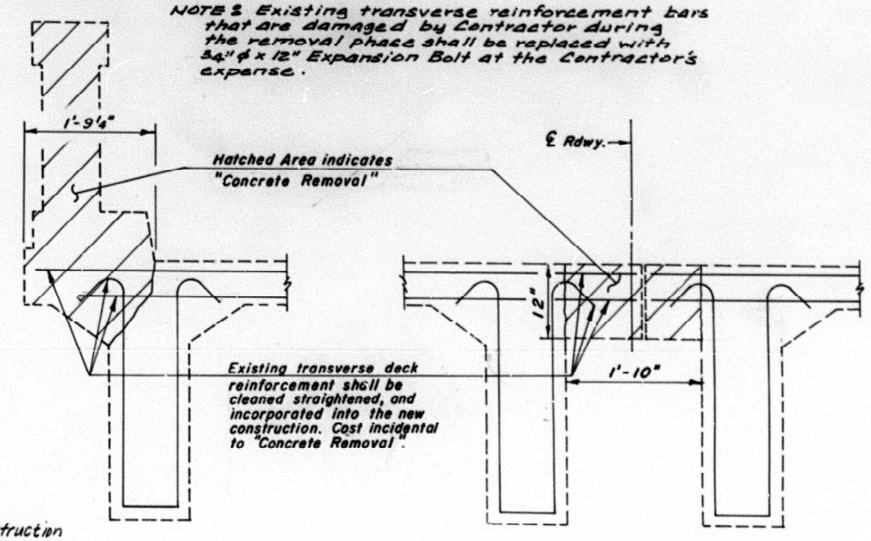

CONCRETE REMOVAL DETAIL

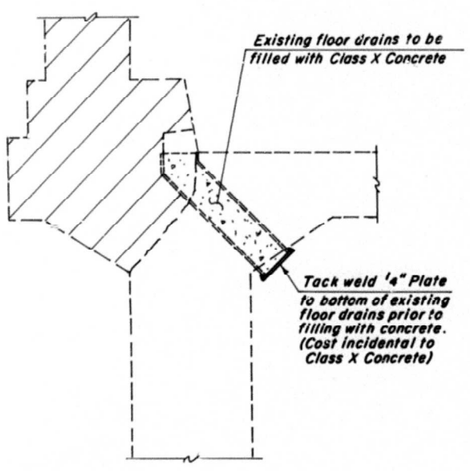

EXISTING FLOOR DRAIN DETAIL

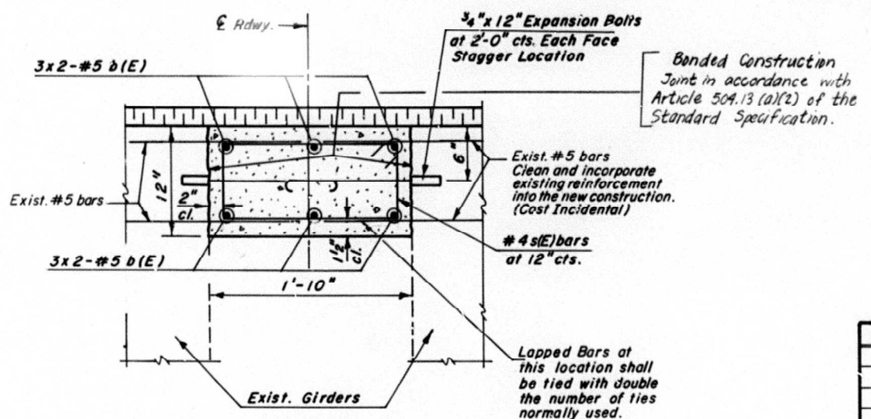

DETAIL "A"

NOTE: METHOD 1 DECK REPAIR SHALL BE USED.

REINFORCEMENT BAR LIST

Bar	No.	Size	Length	Shape
b(E)	32	#5	21'-5"	—
s(E)	41	#4	5'-3"	
s1(E)	82	#4	4'-7"	
Reinforcement Bars (Epoxy Coated)			Lbs.	1110

F.A.P. 63 OVER BARRVILLE CREEK
SECTION (3B)I
MARSHALL COUNTY
STATION 1277+92
STR. NO. 062-0008

ROUTE NO.	SECTION	COUNTY	TOTAL SHEETS	SHEET NO.
F.A.P. 63	(3B) I	MARSHALL	223	89
FED. ROAD DIST. NO. 7	ILLINOIS	FED. AID PROJECT-		

SHEET NO. 4
4 SHEETS

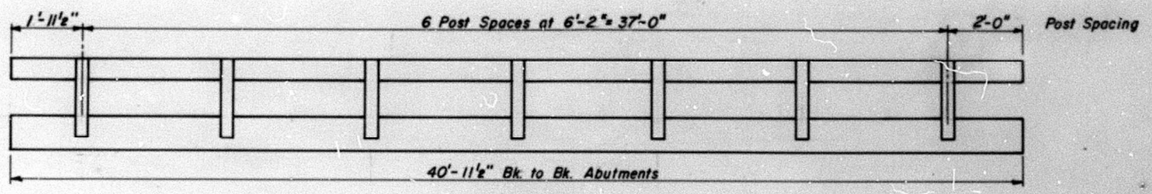

ELEVATION
(Looking East)

NOTE: METHOD 1 DECK REPAIR SHALL BE USED.

NOTES

Hollow structural steel tubing shall conform to the requirements of ASTM designation A-500 Grade B Structural Steel Tubing and shall meet the longitudinal C.V.N. requirements of 15 ft.lbs at 0°F.

All other steel shapes and plates shall conform to the requirements of AASHTO M-183 except posts and angles shall conform to AASHTO M-223, Grade 50.

Bolts, cap screws and nuts shall conform to the requirements of ASTM designation A-307 except for high strength bolts, nuts and washers noted which shall conform to AASHTO M-164.

All bolts, nuts, cap screws, washers and lock washers shall be galvanized in accordance with AASHTO M-232.

All posts, railing, rail splices, anchor devices and angles shall be galvanized after shop fabrication in accordance with AASHTO M-111 and ASTM A-385. Galvanized rail shall not be painted.

Railing shall be in accordance with Section 508 of the Standard Specifications, except as noted, and will be paid for at the contract unit price per lineal foot for STEEL RAILING, TYPE WT.

All field drilled holes shall be coated with an approved zinc rich paint before erection.

The ½" x 6" plates that come in contact with concrete shall receive two coats of asphalt paint conforming to Section 714.08 Type B or place ⅛" fabric bearing pads between the plates and concrete.

The ¾" high strength bolts used to connect the 6" x 4" x ¾" angles to the post shall be tightened in accordance with Article 507.04(g)(3) of the Standard Specifications. The 1" ϕ high strength bolts connecting the angles to the concrete shall be tightened to a snug fit and given an additional ⅛ turn. The ⅝" ϕ cap screws in bottom of posts shall be tightened to a snug fit only.

For multi-span bridges, sufficient ¼" x 6" x 1'-2" galvanized steel shims shall be provided to align rail between adjacent spans. Cost incidental to Steel Railing.

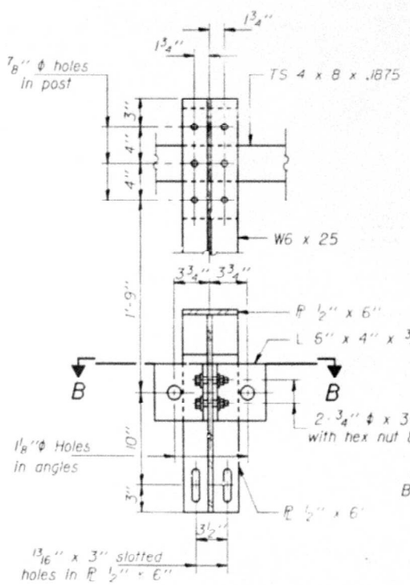

SECTION A-A

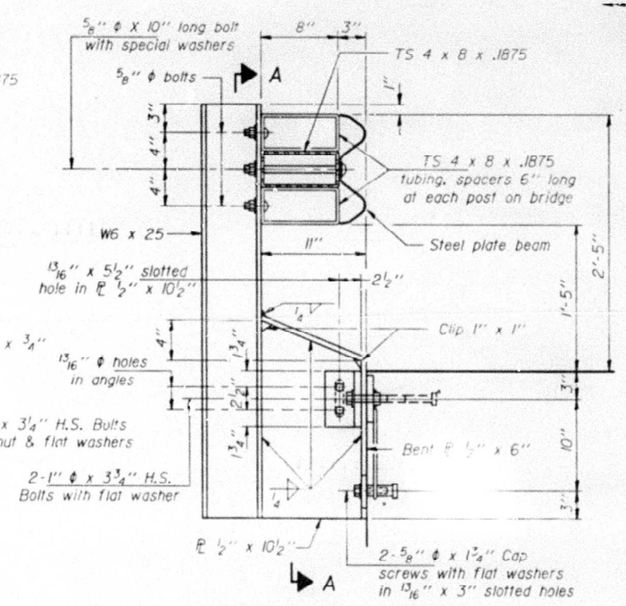

SECTION AT RAIL POST

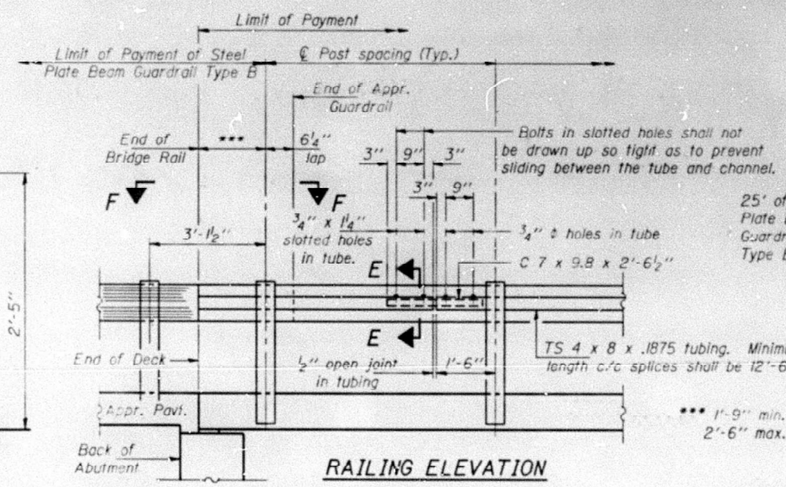

RAILING ELEVATION

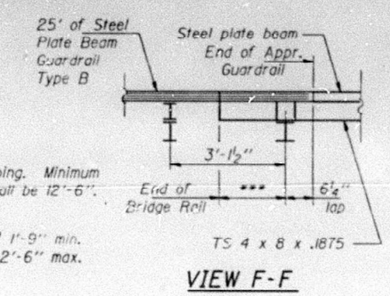

VIEW F-F

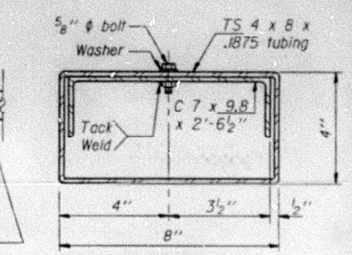

SECTION E-E

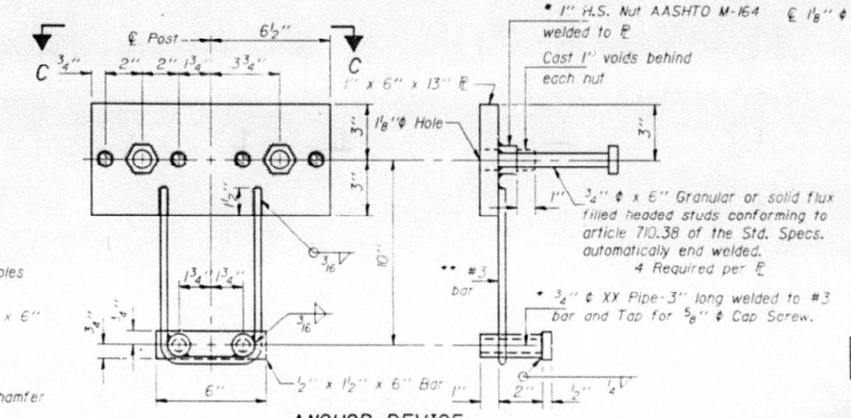

ANCHOR DEVICE

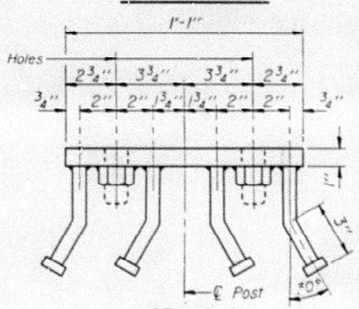

VIEW C-C

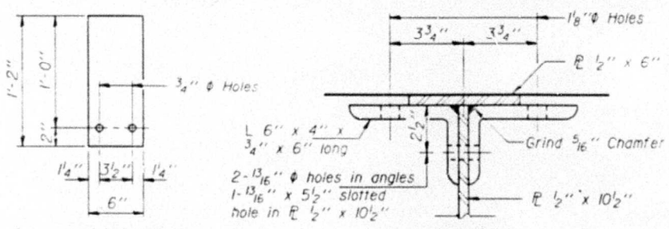

SECTION B-B

¼" SHIM PLATE

3'-3" Maximum Post Spacing

* Threaded areas shall be plugged or blocked off during casting of beam.

** Whenever the lower insert assemblies interfere with strand locations, the #3 bars shall be cut and adjusted in order to allow raising or lowering of the lower inserts. Maximum adjustment not to exceed ½".

BILL OF MATERIAL

Item	Unit	Quantity
Steel Railing, Type WT	Lin. Ft.	82

STEEL RAILING TYPE WT
F.A.P 63 OVER BARRYVILLE CREEK
SECTION (3B)I
MARSHALL COUNTY
STATION 1277+92
STR. NO. 062-0008

ROUTE NO.	SEC.	COUNTY	TOTAL SHEETS	SHEET NO.
F.A.P. RTE. 63	*	MARSHALL	223	90
FED. ROAD DIST. NO. 7	ILLINOIS	PROJECT		

* (3B) I

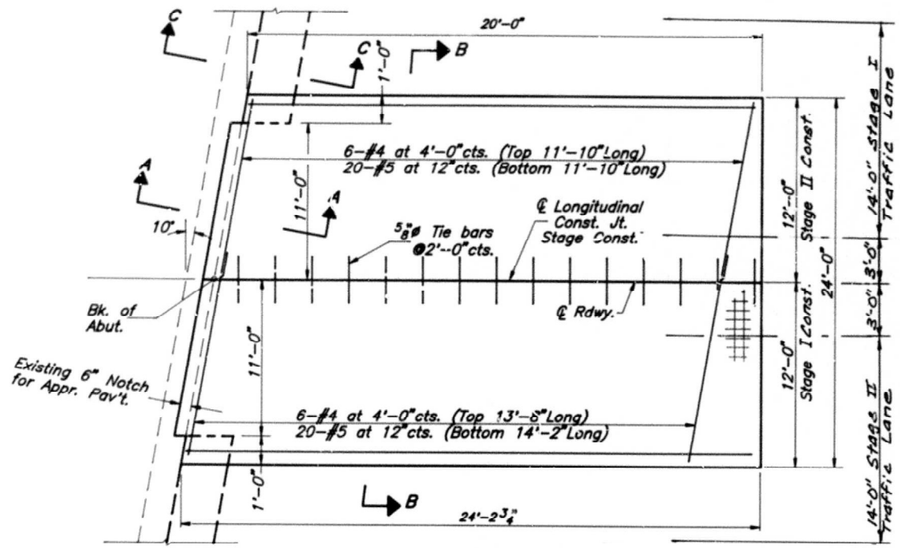

PLAN APPROACH PAVEMENT

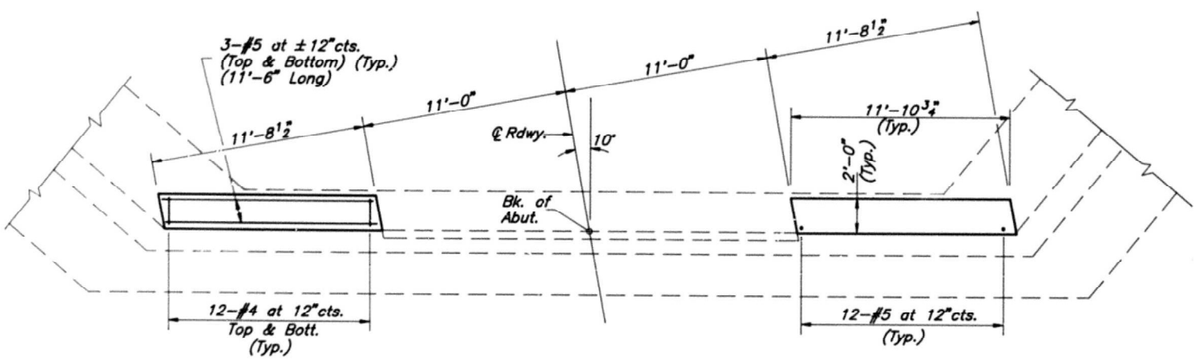

PLAN VIEW ABUTMENT TRANSVERSE BASE PADS

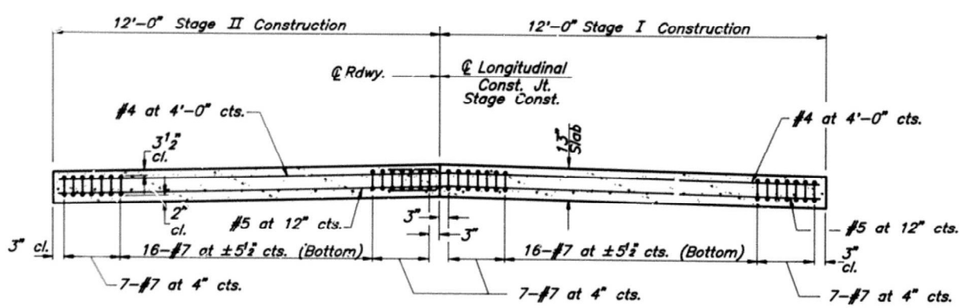

SECTION B-B

QUANTITIES FOR ONE APPROACH PAVEMENT

Skew Angle Degrees	Bottom Reinforcement: Transverse #5 No.	Bottom Reinforcement: Transverse #5 Length	Bottom Reinforcement: Longitudinal #7 No. Req'd.	Top Reinforcement: Transverse #4 No.	Top Reinforcement: Transverse #4 Length	Top Reinforcement: Longitudinal #4 No. Req'd.	Reinforcement Total Weight Pounds	Slab Area Sq. Yds.
10°	20	11'-10"	7 (Each Edge Beam) at 5 1/2" cts. x 4.32 = 19'-0" long Weight = 2,330 Lbs.	6	11'-10"	20 Bars - 19'-5" long Weight = 260 Lbs.	3,240	60.2
10°	20	14'-2"		6	13'-8"			

MIN. BAR LAP
#4 = 1'-8"
#5 = 2'-2"

NOTE: METHOD 1 DECK REPAIR SHALL BE USED.

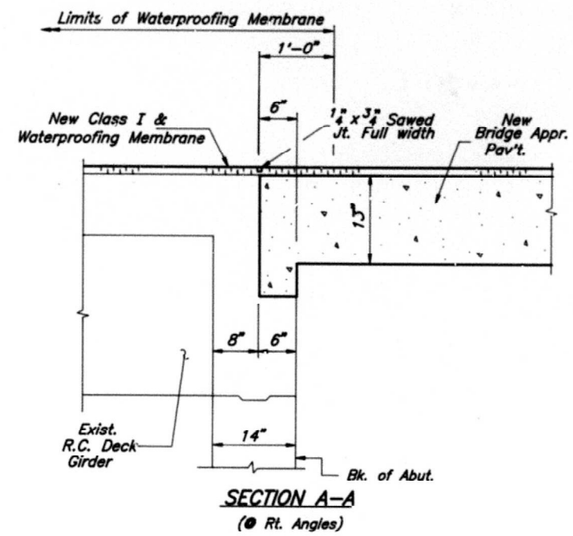

SECTION A-A
(⊥ Rt. Angles)

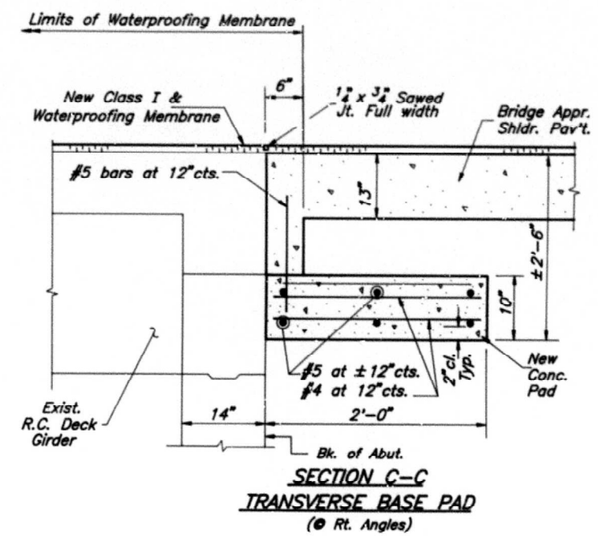

SECTION C-C
TRANSVERSE BASE PAD
(⊥ Rt. Angles)

NOTE:
The cost of Reinforcement Bars and Class X Concrete in Transverse Base Pads shall be incidental to Bridge Approach Pavement and Bridge Approach Shoulder Pavement.
Bridge approach pavement shall be constructed in accordance with Standard 2382 except as noted.
Bridge approach shoulder pavement shall be constructed in accordance with Standard 2324 except as noted.

ONE ABUTMENT TRANSVERSE BASE PADS ESTIMATED QUANTITIES

NO.	SIZE	LENGTH	STAGE CONST.
6	#5	11'-6"	I
6	#5	11'-6"	II
24	#4	1'-8"	I
24	#4	1'-8"	II
12	#5	2'-0"	I
12	#5	2'-0"	II
Class X Concrete		Cu. Yds.	1.5
Reinforcement Bars		Lbs.	250

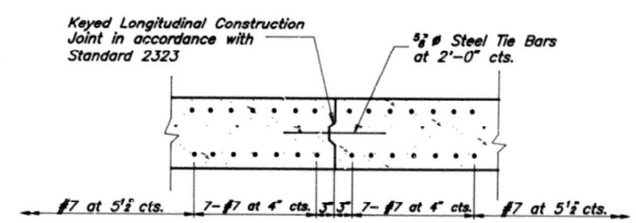

LONGITUDINAL CONSTRUCTION JOINT

BRIDGE APPROACH PAVEMENT DETAILS
BARRVILLE CREEK SEC. (3B)I
STA. 1277+49.41 TO STA. 1277+71.52
STA. 1278+12.48 TO STA. 1278+34.59

1492-123

SLOPE STEPS DETAIL

TYPICAL CROSS-SECTION EMBANKMENT
CONSTRUCTION ON SIDEHILL

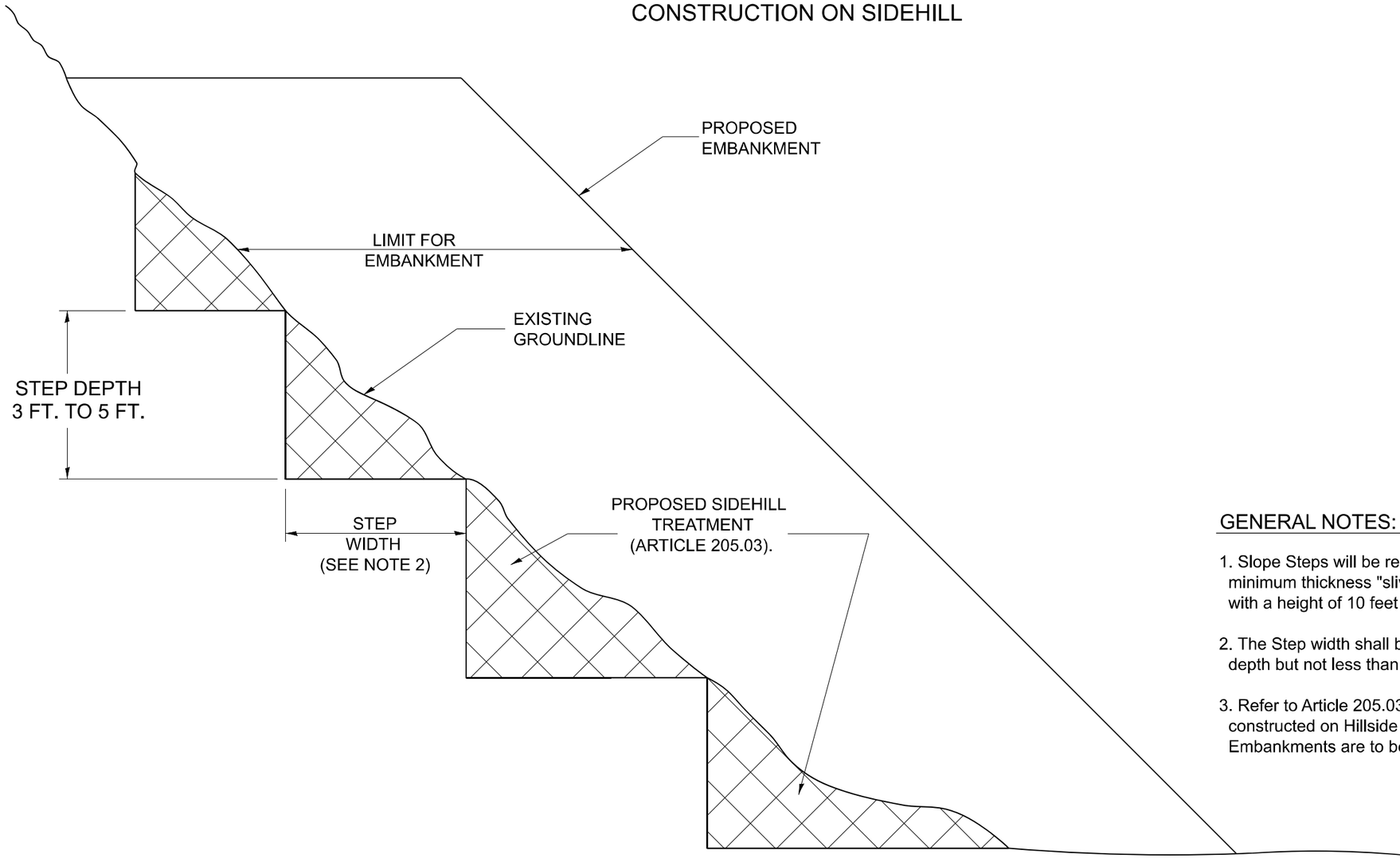

GENERAL NOTES:

1. Slope Steps will be required for all 12(300) minimum thickness "sliver fills" and on all fills with a height of 10 feet or greater.

2. The Step width shall be twice the Step depth but not less than 6 feet.

3. Refer to Article 205.03 for Embankment to be constructed on Hillside or Slopes, or if existing Embankments are to be widened.

REPLACEMENT MATERIAL:

STANDARD EMBANKMENT
(IN ACCORDANCE WITH
205 OF THE STANDARD SPECIFACATION).

All dimensions are in inches (millimeters) unless otherwise noted.

MODEL: 205001-D4
FILE NAME: c:\bms\keg-pw-01\new user\dms25419\D468E33-shl-D4 Details.dgn

Kaskaskia Engineering Group, LLC
PROFESSIONAL REGISTRATIONS
Illinois Professional Design Firm
Professional Engineering Group
208 E. Main St., Suite 300
Belleville, Illinois 62220
618.233.8877 phone
618.233.1977 fax
www.kaskaskiaeng.com
LICENSED NO.
184.004773
20-5000101

USER NAME = rjo	DESIGNED - RJO	REVISED -	
	DRAWN - RJO	REVISED -	
	CHECKED - EJL	REVISED -	
PLOT DATE = 10/10/2025	DATE -	REVISED -	

STATE OF ILLINOIS
DEPARTMENT OF TRANSPORTATION

SLOPE STEPS DETAIL

SCALE: SHEET 1 OF 1 SHEETS STA. TO STA.

DISTRICT 4 DETAIL NO. 205001

F.A.P. RTE.	SECTION	COUNTY	TOTAL SHEETS	SHEET NO.
318	(3-B)BR	MARSHALL	72	53

CONTRACT NO. 68E33

ILLINOIS | FED. AID PROJECT

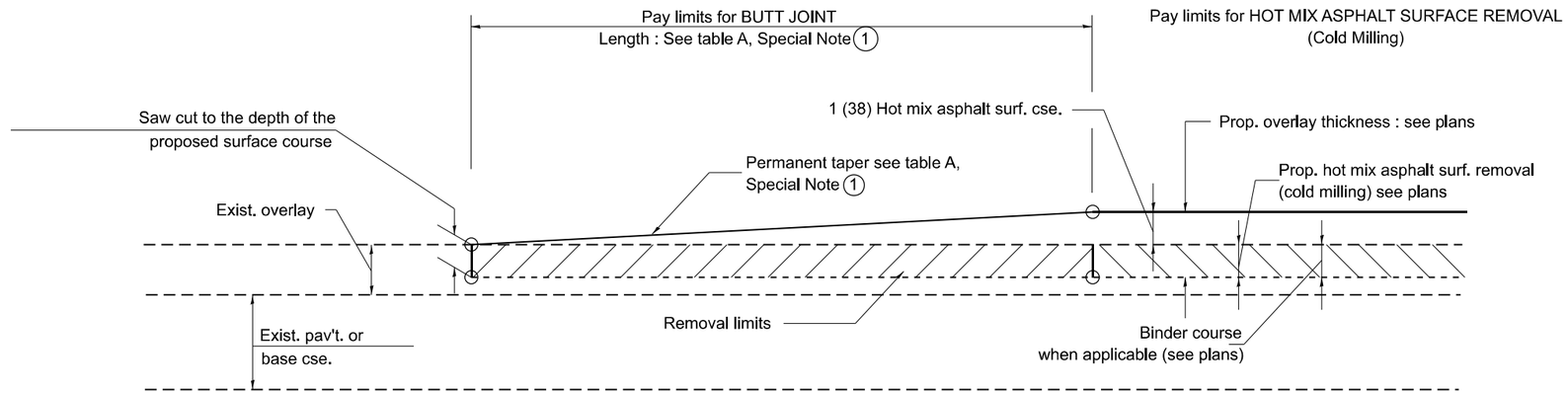

CASE 1 : WITH HOT MIX ASPHALT SURFACE REMOVAL (COLD MILLING)

TABLE A
TAPER RATES

SPECIAL NOTE NUMBER	ELEMENT	MAINLINE INTERSTATES & 4-LANE EXPRESSWAYS	ALL OTHERS
1	BUTT JOINT TAPER RATE	1:480	1:240
2	TEMPORARY RAMP TAPER RATE	1:80	1:40

GENERAL NOTES

1. The work shall be done in accordance with Article 406.08 and the Special Provision for Butt Joints.
2. The pavement surface to be removed may be either bituminous or P.C. concrete. The work shall be performed in accordance with Article 440.04 and the Special Provisions for Butt Joints.
3. The saw cut joints shall be primed just prior to the placing of bituminous material. The work will be in accordance with the applicable portions of Article 406.05.
4. The length of butt joint is based on the taper rate times change in cold milling depth within the butt joint pay limits, unless otherwise indicated.
5. Temporary ramps are paid for separately and not included in the cost of the butt joints.

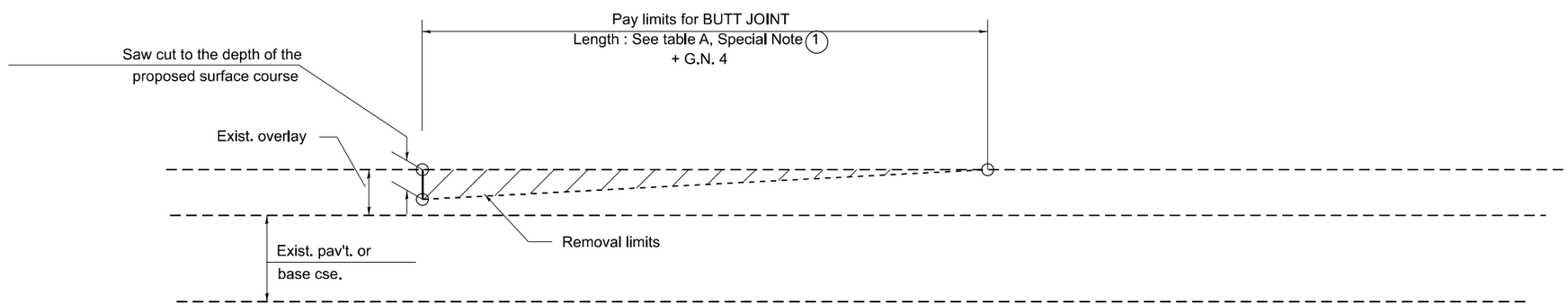

CASE 2 : NO HOT MIX ASPHALT SURFACE REMOVAL (COLD MILLING)

All dimensions are in inches (millimeters) unless otherwise noted.

MODEL: 406101-D4 -1
FILE NAME: c:\bms\keg-pw-01\new user\dms25419\D468E33-sh-D4 Details.dgn

Kaskaskia Engineering Group, LLC
PROFESSIONAL REGISTRATIONS
Illinois Professional Design Firm
Professional Engineering Group
LICENSE NO.
184.001573
20-5300586

USER NAME = rjo	DESIGNED - RJO	REVISED -	
	DRAWN - RJO	REVISED -	
	CHECKED - EJL	REVISED -	
PLOT DATE = 12/1/2025	DATE -	REVISED -	

STATE OF ILLINOIS
DEPARTMENT OF TRANSPORTATION

BUTT JOINTS

SCALE: SHEET 1 OF 3 SHEETS STA. TO STA.

DISTRICT 4 DETAIL NO. 406101

F.A.P. RTE.	SECTION	COUNTY	TOTAL SHEETS	SHEET NO.
318	(3-B)BR	MARSHALL	72	54

CONTRACT NO. 68E33

ILLINOIS | FED. AID PROJECT

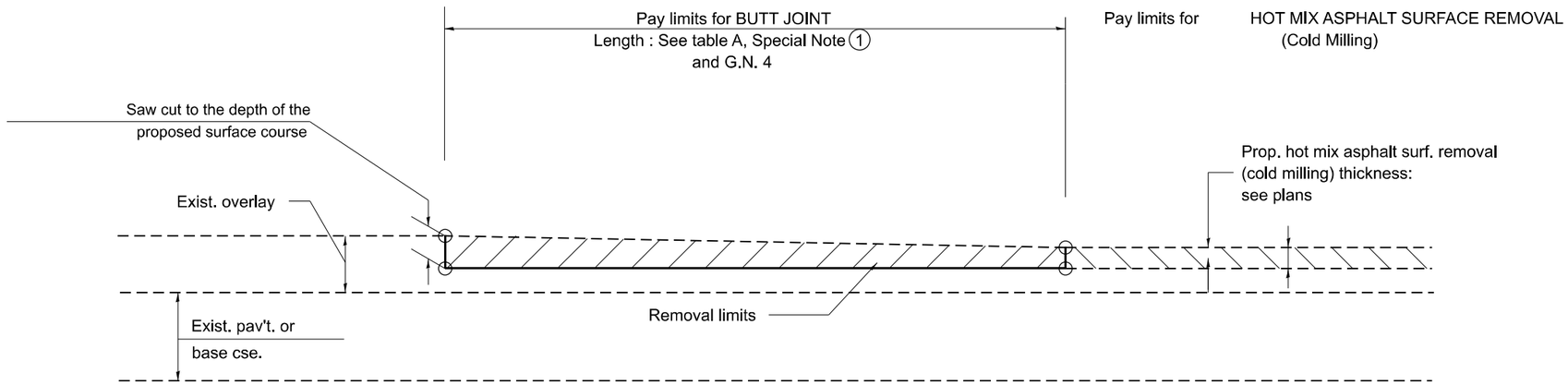

CASE 3 : HOT MIX ASPHALT SURFACE REMOVAL (COLD MILLING)

TIE-IN TO EXISTING BITUMINOUS TAPER

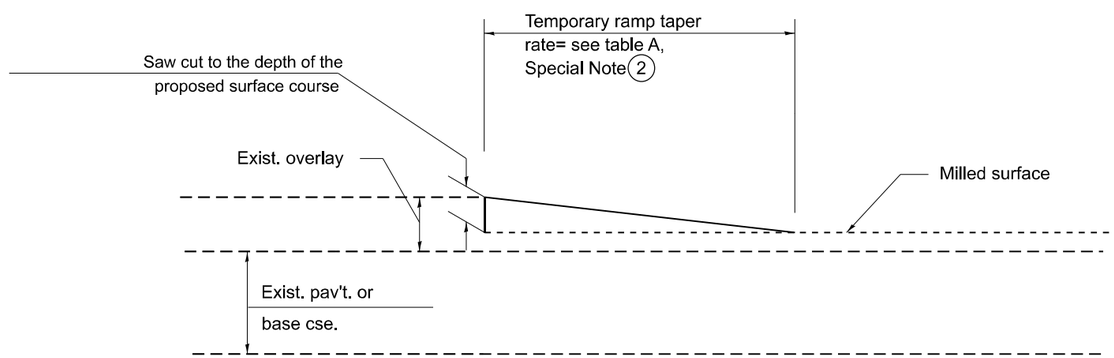

DETAIL TEMPORARY RAMP

All dimensions are in inches (millimeters)
unless otherwise noted.

MODEL: 406101-D4 -2
FILE NAME: c:\bms\keg-pw-01\new user\dms25419\D468E33-sht-D4 Details.dgn

Kaskaskia Engineering Group, LLC
PROFESSIONAL REGISTRATION
Illinois Professional Design Firm
Professional Engineering Group
209 E. Main St., Suite 300
Belleville, Illinois 62220
618.233.8276 Phone
618.233.8677 Fax
www.kaskaskiaeng.com
LICENSE No.
184.001771
20-5500586

USER NAME = rjo	DESIGNED - RJO	REVISED -	
	DRAWN - RJO	REVISED -	
	CHECKED - EJL	REVISED -	
PLOT DATE = 12/1/2025	DATE -	REVISED -	

STATE OF ILLINOIS
DEPARTMENT OF TRANSPORTATION

BUTT JOINTS

SCALE: | SHEET 2 OF 3 SHEETS | STA. | TO STA.

DISTRICT 4 DETAIL NO. 406101

F.A.P. RTE.	SECTION	COUNTY	TOTAL SHEETS	SHEET NO.
318	(3-B)BR	MARSHALL	72	55

CONTRACT NO. 68E33

ILLINOIS | FED. AID PROJECT

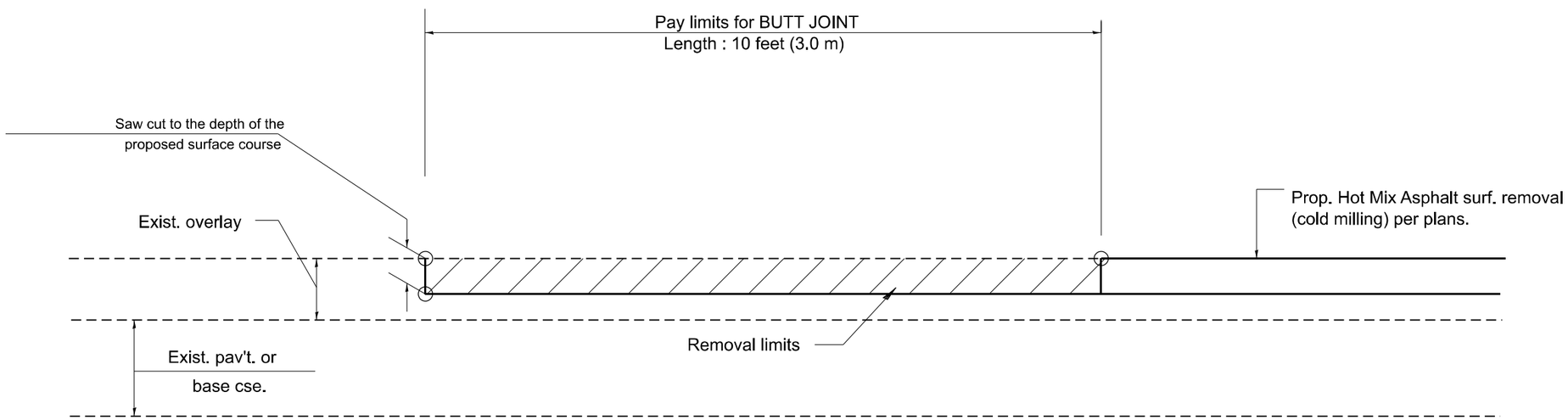

CASE 4 : SINGLE LIFT OVERLAY WITH EQUIVALENT DEPTH
HOT MIX ASPHALT SURFACE REMOVAL (COLD MILLING)
TIE-IN TO EXISTING BITUMINOUS TAPER

All dimensions are in inches (millimeters)
unless otherwise noted.

MODEL: 406101-D4 -3
FILE NAME: c:\bms\keg-pw-01\new user\dms25419\D468E33-shl-D4 Details.dgn

Kaskaskia Engineering Group, LLC
PROFESSIONAL REGISTRATIONS
Illinois Professional Design Firm
Professional Engineering Group
LICENSED NO.
184.004773
20 5080101

USER NAME = rjo	DESIGNED - RJO	REVISED -	
	DRAWN - RJO	REVISED -	
	CHECKED - EJL	REVISED -	
PLOT DATE = 12/1/2025	DATE -	REVISED -	

STATE OF ILLINOIS
DEPARTMENT OF TRANSPORTATION

BUTT JOINTS

SCALE: SHEET 3 OF 3 SHEETS STA. TO STA.

DISTRICT 4 DETAIL NO. 406101

F.A.P. RTE.	SECTION	COUNTY	TOTAL SHEETS	SHEET NO.
318	(3-B)BR	MARSHALL	72	56

CONTRACT NO. 68E33

ILLINOIS | FED. AID PROJECT

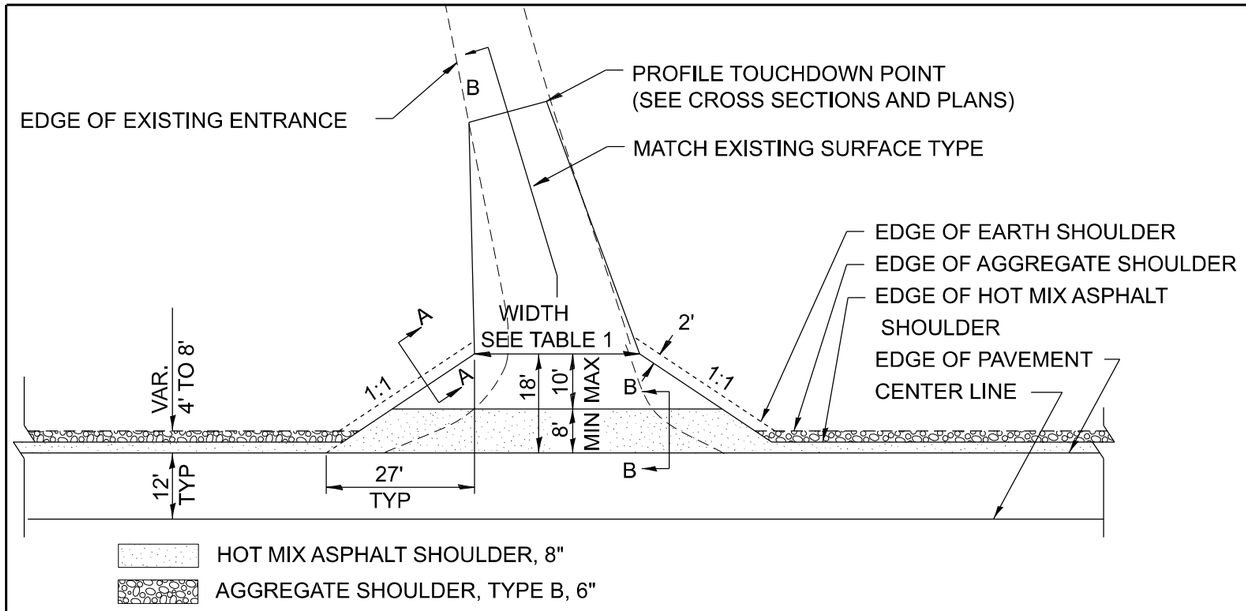

PLAN

COMMERCIAL / FARM-RELATED ENTRANCE

TABLE 1								
RURAL ENTRANCE DESIGN								
ELEMENT	NON-COMMERCIAL		NON-COMMERCIAL W/ LARGE FARM EQUIPMENT		COMMERCIAL			
					1-WAY OPERATION		2-WAY OPERATION	
WIDTH (W)	12'(3.6m) Min.	24'(7.2m) Max.	20' (6.1m)Min.	30'(9.0m)Max.	14'(4.3m) Min.	24'(7.2m) Max.	24'(7.2m) Min.	35'(10.7m) Max.
FLARE	1:1.5							
MAX. GRADE (G)	12%		12%		10%			
SURFACE TYPE								
INCIDENTAL HOT MIX ASPHALT SURFACING	6"		—		8"			
AGGREGATE SURFACE COURSE	6"		8"		—			
PCC DRIVEWAY PAVEMENT	6"		—		7"			

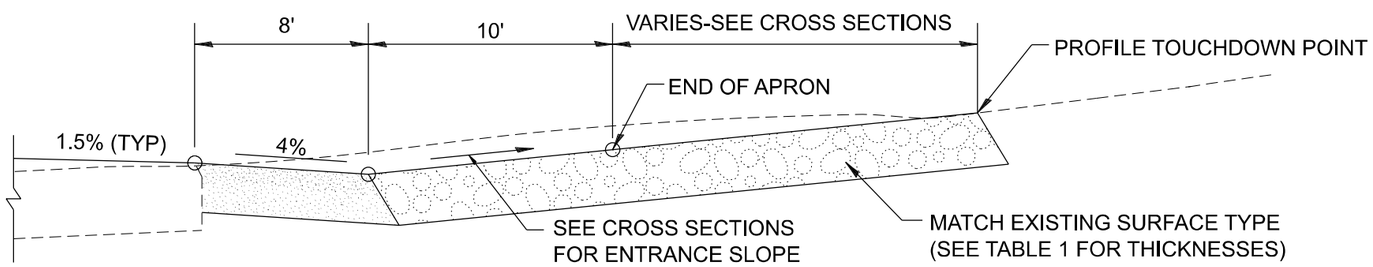

SECTION B-B

RECONSTRUCTED RURAL ENTRANCE

(EXISTING ENTRANCE HIGHER THAN APRON)

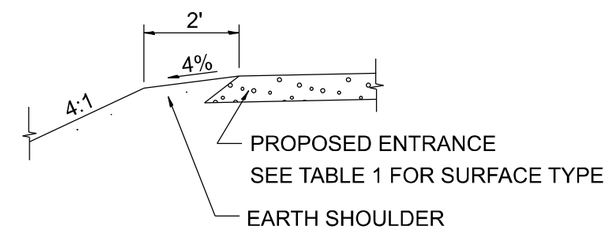

SECTION A-A

SHOULDER TREATMENT FOR RURAL ENTRANCES

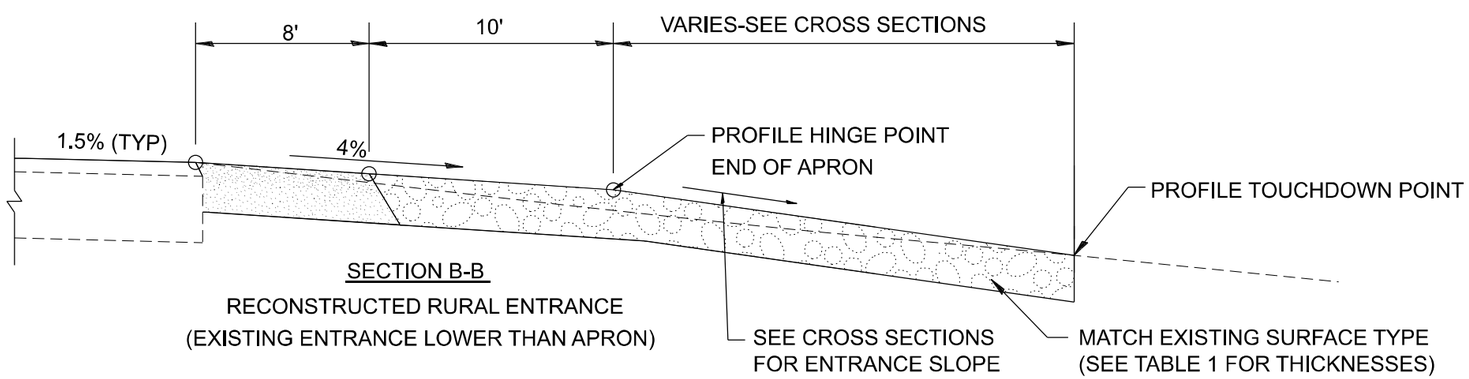

SECTION B-B

RECONSTRUCTED RURAL ENTRANCE

(EXISTING ENTRANCE LOWER THAN APRON)

GENERAL NOTES

1. ENTRANCES SHALL SLOPE AWAY FROM THE PAVEMENT AT A RATE EQUAL TO THE SHOULDER SLOPE FOR A MINIMUM DISTANCE OF 8'.

2. A MINIMUM 8' PAVED SHOULDER SHALL BE CONSTRUCTED BETWEEN LOCATIONS WHERE THE RURAL ENTRANCE IS LESS THAN 50' FROM AN ADJACENT SIDEROAD, ENTRANCE OR MAILBOX TURNOUT.

3. A TAPER RATE OF 5:1 IS DESIRABLE WHEN TRANSITING FROM THE RURAL ENTRANCE WIDTH SHOWN IN TABLE 1, TO THE EXISTING ENTRANCE WIDTH.

All dimensions are in inches (millimeters) unless otherwise noted.

MODEL: 406301-D4 -1
FILE NAME: c:\bms\keg-pw-01\new user\dms25419\D468E33-sht-D4 Details.dgn

Kaskaskia Engineering Group, LLC
PROFESSIONAL REGISTRATIONS
Illinois Professional Design Firm 184.004773
Professional Engineering Group 20-5000086
209 E. Main St., Suite 300
Belleville, Illinois 62220
618.233.8877 phone
618.233.8877 fax
www.kaskaskiaeng.com
LICENSE NO.

USER NAME = rjo	DESIGNED - RJO	REVISED -	
	DRAWN - RJO	REVISED -	
	CHECKED - EJL	REVISED -	
PLOT DATE = 12/1/2025	DATE -	REVISED -	

STATE OF ILLINOIS
DEPARTMENT OF TRANSPORTATION

RURAL ENTRANCES FOR "3R" PROJECTS

SCALE: SHEET 1 OF 2 SHEETS STA. TO STA.

DISTRICT 4 DETAIL NO. 406301

F.A.P. RTE.	SECTION	COUNTY	TOTAL SHEETS	SHEET NO.
318	(3-B)BR	MARSHALL	72	57
		CONTRACT NO. 68E33		
		ILLINOIS	FED. AID PROJECT	

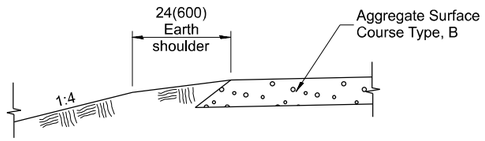

SECTION A-A

SHOULDER TREATMENT FOR AGGREGATE ENTRANCES

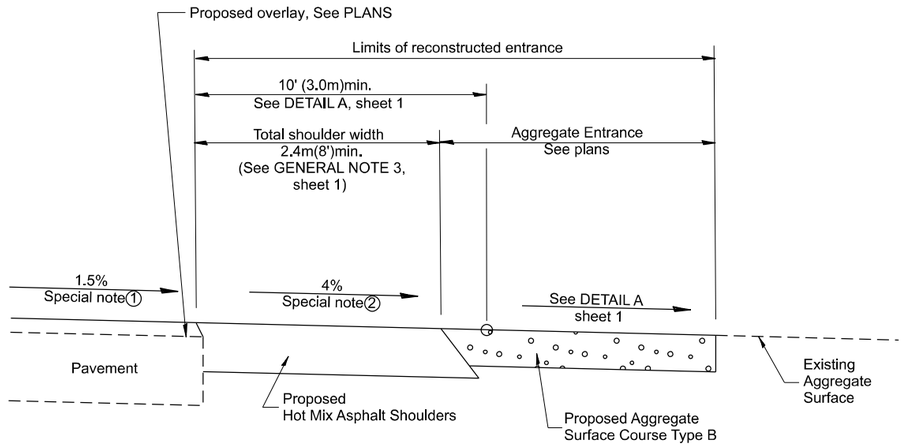

SECTION B-B

RECONSTRUCTED AGGREGATE ENTRANCE

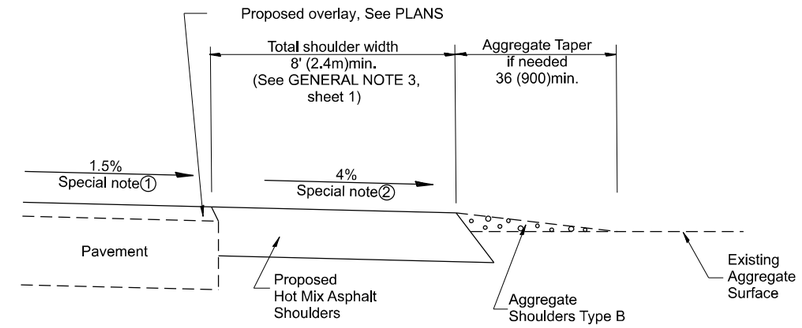

SECTION B-B

EXISTING AGGREGATE ENTRANCE

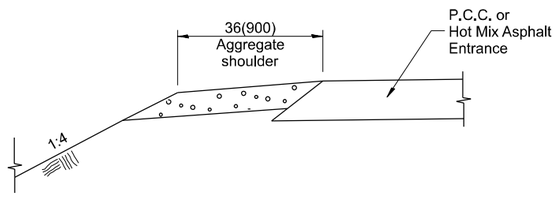

SECTION C-C

SHOULDER TREATMENT FOR P.C.C. OR HOT MIX ASPHALT ENTRANCES

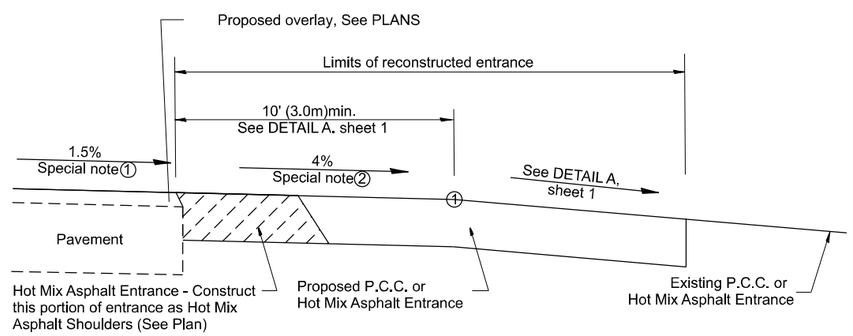

SECTION D-D

RECONSTRUCTED P.C.C. OR HOT MIX ASPHALT ENTRANCE

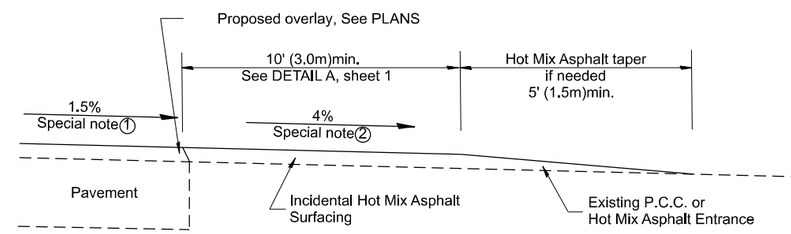

SECTION D-D

EXISTING P.C.C. OR HOT MIX ASPHALT ENTRANCE

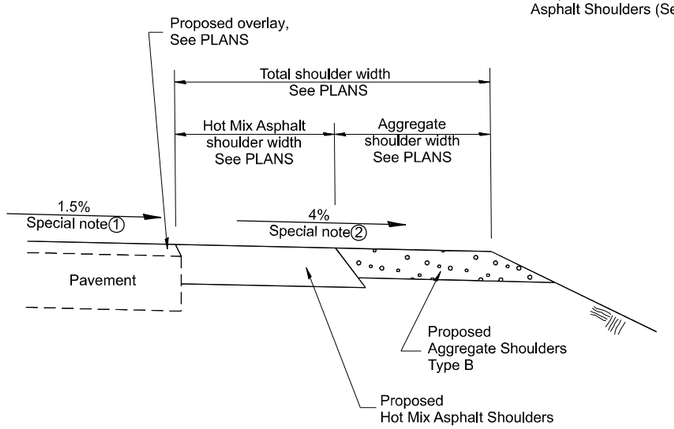

SECTION E-E

MAINLINE SHOULDER TREATMENT

SPECIAL NOTES

1. The mainline pavement cross-slope is 1.5% for tangent alignment. See PLANS for cross-slope on superelevated horizontal curves.

2. The shoulder slope shall control the entrance profile for a distance of 10' (3.0m) minimum from the pavement edge. The shoulder cross-slope is 4% for tangent alignment. Through superelevated curves, the maximum pavement-shoulder breakover should not be greater than 10% for shoulders 6' (1.8m) and wider and 12% for shoulders 4' (1.2m) and less. Where 12' (366cm) paved shoulders are provided, the breakover should be at the edge of the paved shoulder rather than at the pavement edge.

All dimensions are in inches (millimeters) unless otherwise noted.

DISTRICT 4 DETAIL NO. 406301

F.A.P. RTE.	SECTION	COUNTY	TOTAL SHEETS	SHEET NO.
318	(3-B)BR	MARSHALL	72	58
		CONTRACT NO. 68E33		
		ILLINOIS	FED. AID PROJECT	

Kaskaskia Engineering Group, LLC
PROFESSIONAL REGISTRATIONS
Illinois Professional Design Firm
Professional Engineering Group
LICENSE NO.
184.001771
20-5106595
200 E. Main St., Suite 100
Belleville, Illinois 62220
618.233.8877 phone
618.233.3977 fax
www.kaskaskiaeng.com

USER NAME = rjo	DESIGNED - RJO	REVISED -	
	DRAWN - RJO	REVISED -	
	CHECKED - EJL	REVISED -	
PLOT DATE = 12/1/2025	DATE -	REVISED -	

STATE OF ILLINOIS
DEPARTMENT OF TRANSPORTATION

RURAL ENTRANCES FOR "3R" PROJECTS

SCALE: | SHEET 2 OF 2 SHEETS | STA. | TO STA.

MODEL: 406301-D4 -2
FILE NAME: c:\bms\keg-pw-01\new user\dms25419\D468E33-sht-D4 Details.dgn

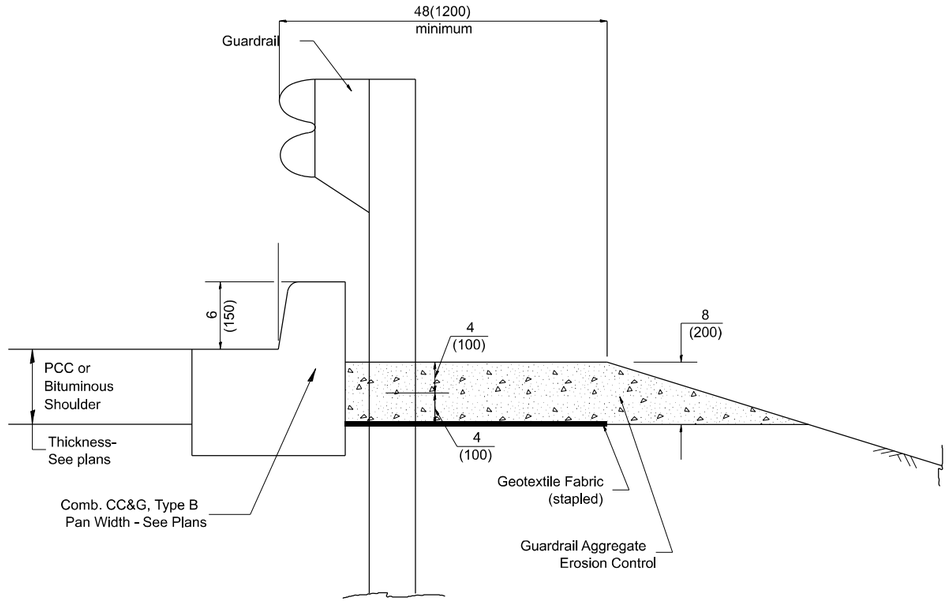

TYPICAL SECTION WITH COMBINATION CONCRETE CURB & GUTTER

GENERAL NOTES: GUARDRAIL AGGREGATE EROSION CONTROL

1. This work shall consist of grading as needed, furnishing and installing geotextile fabric and staples, and furnishing, placing and shaping crushed aggregate around and behind Steel Plate Beam Guardrail posts in accordance with Plan Details.

2. Before placing the aggregate and the Geotextile Fabric, weeds and grass shall be removed from the area to be covered.

3. After the area has been prepared, and in a dry condition, the Geotextile fabric shall be placed with a 12(300) minimum overlap. A knife cut for guardrail post installation is necessary.

4. The aggregate shall be deposited, compacted and shaped by either mechanical or hand methods, in a manner reasonably true to line and grade.

5. The Contractor shall have the option of placing the guardrail before or after the Geotextile Fabric and Aggregate are in place. If the guardrail is placed after the Geotextile Fabric and Aggregate, then any voids must be filled and the aggregate returned to line and grade.

6. Materials shall meet the following requirements:

A. The crushed aggregate shall be CA1 gradation in accordance with Article 1004.01(c) of the Standard Specifications.

B. The Geotextile Fabric shall be nonwoven fabric in accordance with Article 1080.02 of the Standard Specifications.

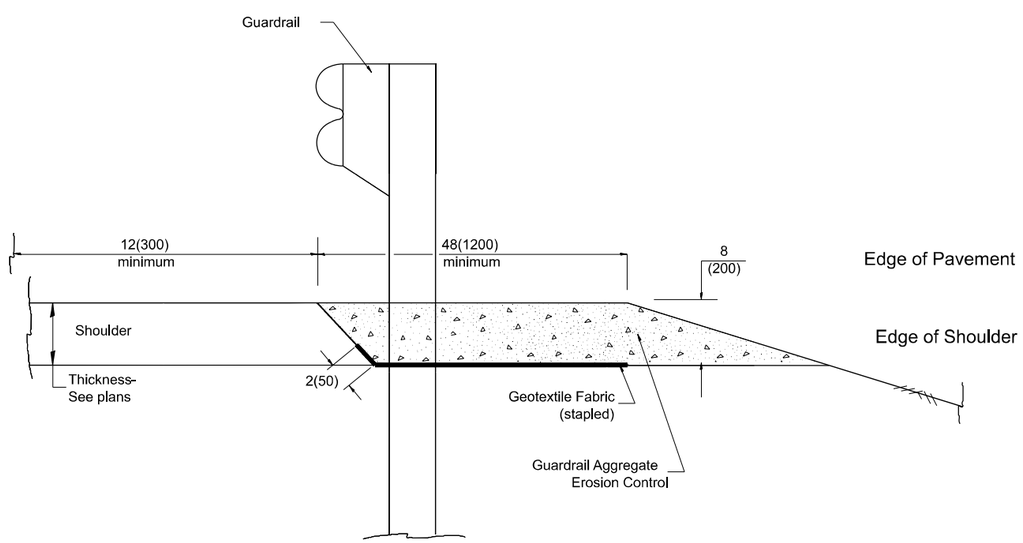

TYPICAL SECTION WITHOUT EROSION CONTROL CURB

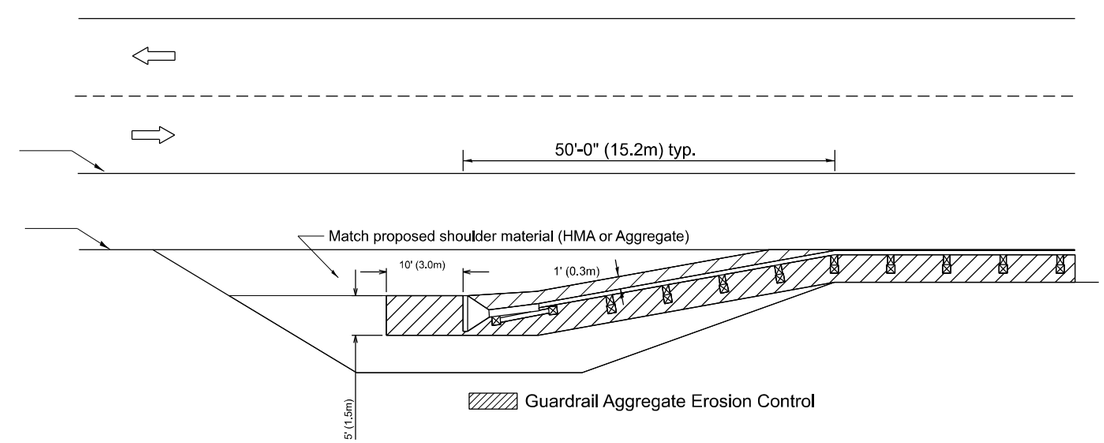

All dimensions are in inches (millimeters) unless otherwise noted.

MODEL: 630101-D4 - 1
FILE NAME: c:\bms\keg-pw-01\new user\dms25419\D468E33-ah-D4 Details.dgn

Kaskaskia Engineering Group, LLC
PROFESSIONAL REGISTRATIONS: Illinois Professional Design Firm, Professional Engineering Group
LICENSE No. 184.001771, 20-5500586

USER NAME = rjo	DESIGNED - RJO	REVISED -	
	DRAWN - RJO	REVISED -	
	CHECKED - EJL	REVISED -	
PLOT DATE = 12/1/2025	DATE -	REVISED -	

STATE OF ILLINOIS
DEPARTMENT OF TRANSPORTATION

GUARDRAIL EROSION CONTROL TREATMENTS

SCALE: | SHEET 1 OF 2 SHEETS | STA. | TO STA.

DISTRICT 4 DETAIL NO. 630101

F.A.P. RTE.	SECTION	COUNTY	TOTAL SHEETS	SHEET NO.
318	(3-B)BR	MARSHALL	72	59

CONTRACT NO. 68E33

ILLINOIS | FED. AID PROJECT

DETAIL "A"

#4 reinforcement bars may be cast in PCC apron and precast inlet box or drilled and anchored with an approved chemical adhesive at 2' spacing. Cost of curb and reinforcement are included in the cost of shoulder inlet.

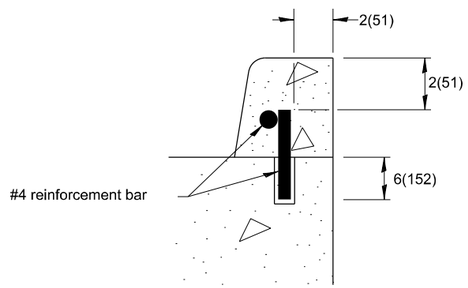

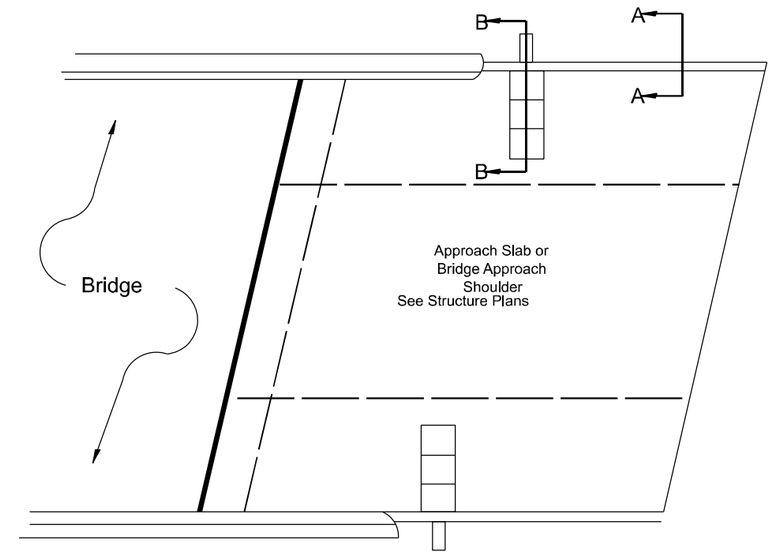

PLAN VIEW

APPROACH SLAB OR SHOULDER PLACEMENT

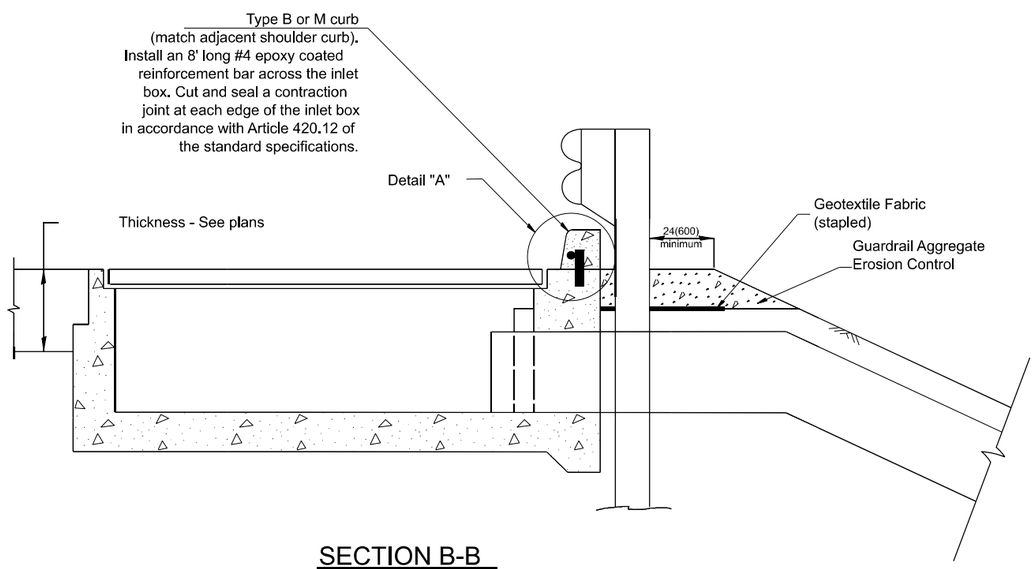

SECTION B-B

TYPICAL SECTION AT INLETS

TYPE E, F & G (HIGHWAY STANDARD 610001)

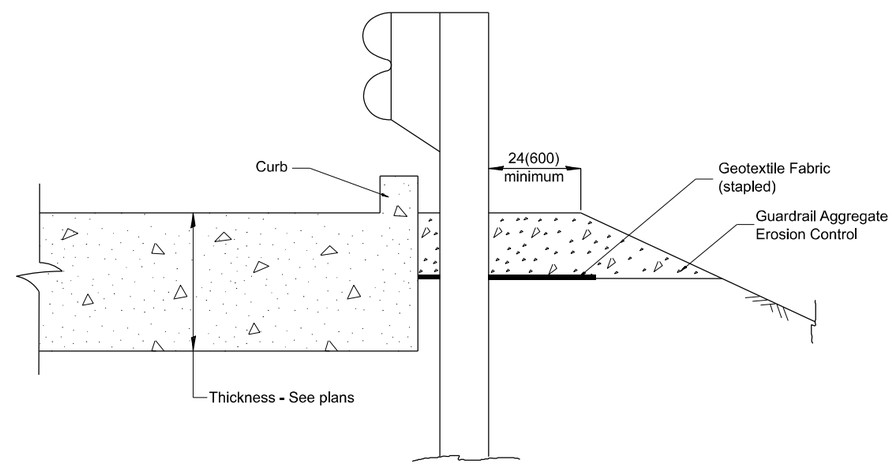

SECTION A-A

TYPICAL SECTION WITH BRIDGE APPROACH CURB

All dimensions are in inches (millimeters) unless otherwise noted.

MODEL: 630101-D4 - 2
FILE NAME: c:\bms\kg-pw-01\new user\dms25419\D468E33-sht-D4 Details.dgn

Kaskaskia Engineering Group, LLC
PROFESSIONAL REGISTRATIONS: Illinois Professional Design Firm 184.001573; Professional Engineering Group 20-5106586
299 E. Main St., Suite 101, Belleville, Illinois 62220; 618.233.8877 phone; 618.233.1977 fax; www.kaskaskiaeng.com

USER NAME = rjo	DESIGNED - RJO	REVISED -	
	DRAWN - RJO	REVISED -	
	CHECKED - EJL	REVISED -	
PLOT DATE = 12/1/2025	DATE -	REVISED -	

STATE OF ILLINOIS
DEPARTMENT OF TRANSPORTATION

GUARDRAIL EROSION CONTROL TREATMENTS

SCALE: | SHEET 2 OF 2 SHEETS | STA. TO STA.

DISTRICT 4 DETAIL NO. 630101

F.A.P. RTE.	SECTION	COUNTY	TOTAL SHEETS	SHEET NO.
318	(3-B)BR	MARSHALL	72	60

CONTRACT NO. 68E33

ILLINOIS | FED. AID PROJECT

PERMANENT SURVEY TIES

○ Permanent Survey Tie
□ Section Corner, ¼ Corner, or other land corner.

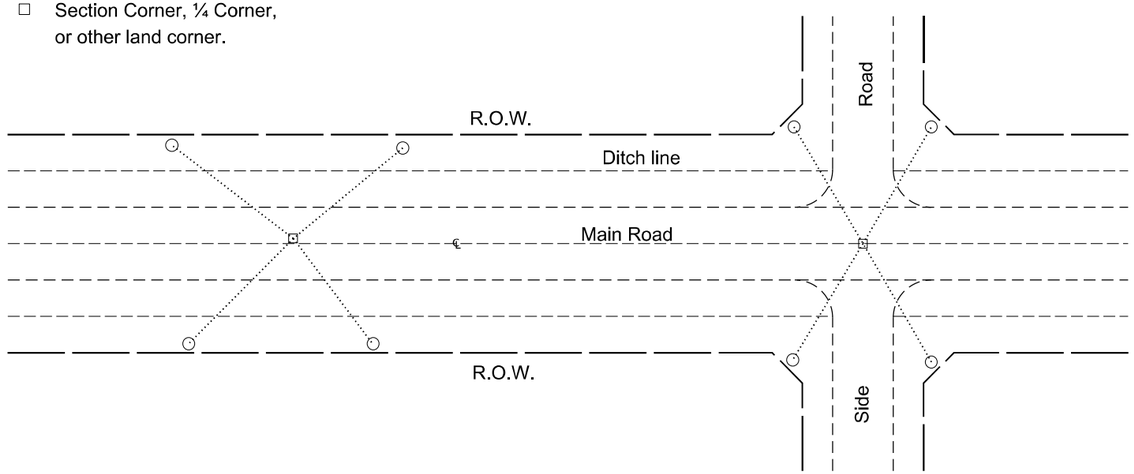

TYPICAL APPLICATION

GENERAL NOTES

1. The marker shall be cast in place of Class SI Concrete.
2. Tie marker shall be installed after the final seeding has been completed unless otherwise specified by the Engineer.
3. The tie distances to the section corner shall be measured and recorded by the surveyor setting the PSM. All ties shall be turned over to the IDOT Chief of Surveys or Chief of Plats after recordation.
4. All documentation shall be performed by a PLS
5. The metal tablet used on permanent survey markers shall be made of bronze.

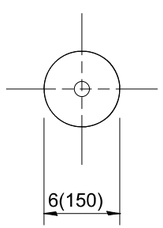

PLAN

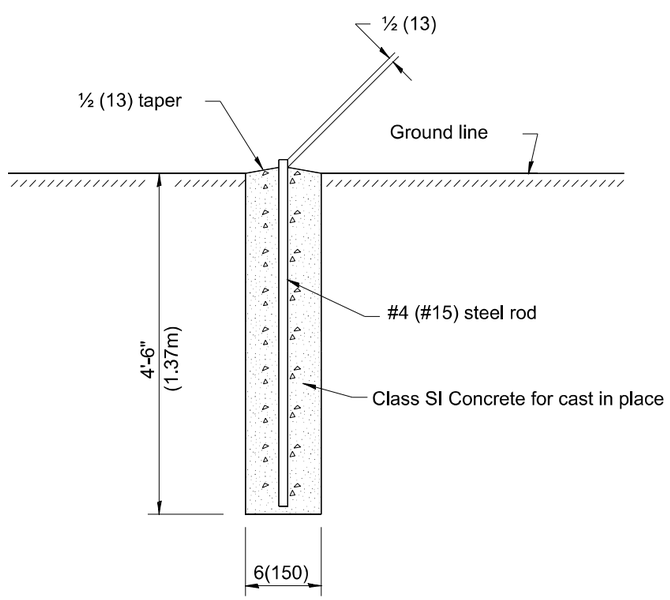

SECTION

PERMANENT SURVEY MARKERS

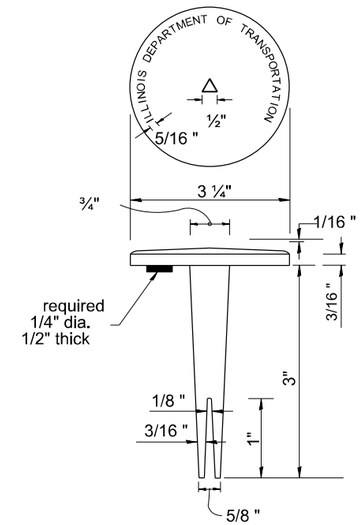

BRASS TABLET

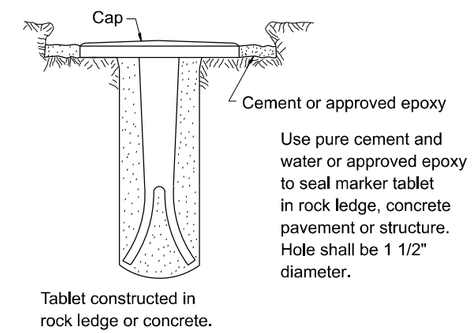

TYPE I

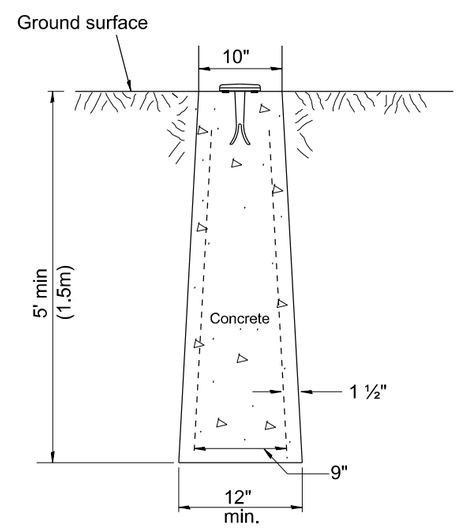

TYPE II
CAST-IN-PLACE MARKER

GENERAL NOTES

1. All type II markers shall be cast in place, and precast markers will not be allowed.
2. Two permanent magnets, each having a diameter of ¾ (19) and a thickness of ¼ (6), or equivalent, shall be attached to the underside of the tablet with an approved epoxy bonding agent.
3. The location of the markers shall be in accordance with the plans in general, the markers will be placed at the P.T.'s, P.C.'s, and P.I.'s llocated within the R.O.W. of horizontal curves and spaces along the tangents in a way that a minimum of two markers are always inter-visible, and not to exceed 1000' (300m).
4. The markers shall be placed under the direction of the Engineer and shall be installed in a workmanlike manner in order that there will be no further settlement or horizontal shifting. The monuments shall be placed in a way that the survey point will fall within the portion of the plaque provided for that purpose.
5. The project designation, the centerline station, the survey point, and the elevation shall be permanently marked by the use of metal dies after marker has been installed.

All dimensions are in inches (millimeters) unless otherwise noted.

MODEL: 667101-D4
FILE NAME: c:\bms\kcg-pw-01\new user\dms25419\D468E33-sh-D4 Details.dgn

Kaskaskia Engineering Group, LLC
209 E. Main St., Suite 101, Belleville, Illinois 62220
618.233.8877 phone
618.233.8877 fax
www.kaskaskiaeng.com
PROFESSIONAL REGISTRATION: Illinois Professional Design Firm, Professional Engineering Group
LICENSE NO. 184.001771
20-5106501

USER NAME = rjo	DESIGNED - RJO	REVISED -	
	DRAWN - RJO	REVISED -	
	CHECKED - EJL	REVISED -	
PLOT DATE = 12/1/2025	DATE -	REVISED -	

STATE OF ILLINOIS
DEPARTMENT OF TRANSPORTATION

PERMANENT SURVEY TIE &
PERMANENT SURVEY MARKERS TY. I - TY. II

SCALE: | SHEET 1 OF 1 SHEETS | STA. TO STA.

DISTRICT 4 DETAIL NO. 667101

F.A.P. RTE.	SECTION	COUNTY	TOTAL SHEETS	SHEET NO.
318	(3-B)BR	MARSHALL	72	61
		CONTRACT NO. 68E33		
		ILLINOIS FED. AID PROJECT		

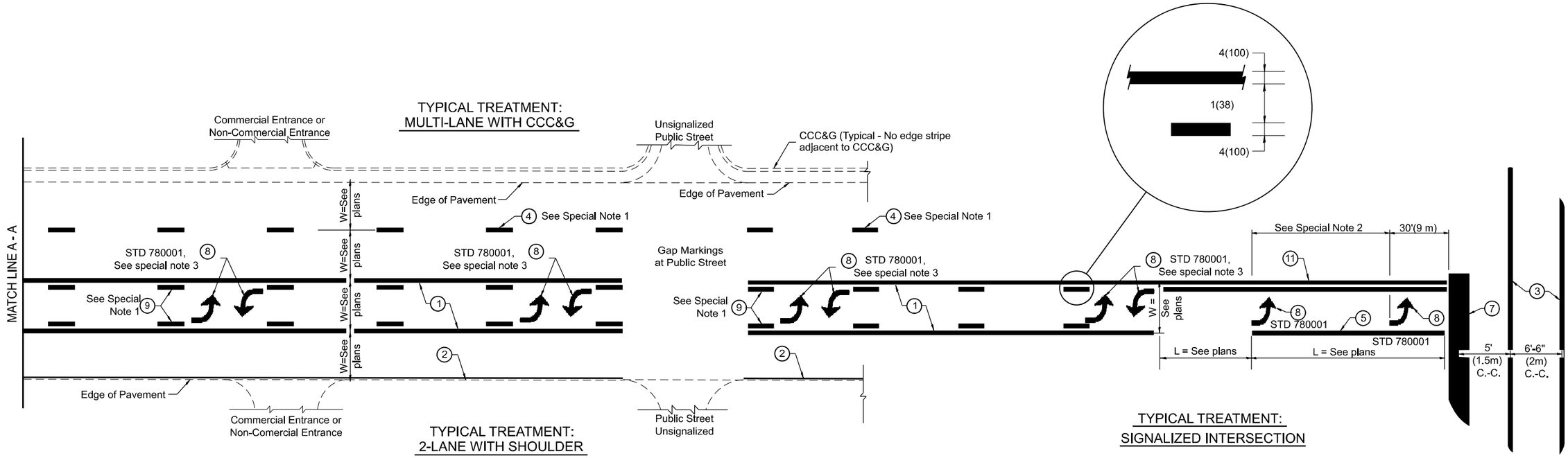

FLUSH PAVED MEDIAN: TWO-WAY LEFT TURN LANE WITH ONE-WAY LEFT TURN LANE AT SIGNALIZED INTERSECTION

TYPICAL PAVEMENT MARKING LEGEND

(Note: This is a District Standard Legend.
Some elements may not apply to specific project.)

1. 4(100) Solid (Yellow)
2. 4(100) Solid (White)
3. 2-6(150) Crosswalk @ 6'-6" (2m)min C.-C. (White)
   2-8(200) Crosswalk @ 6'-6" (2m)min C.-C. (White) (When traffic signals are present.)
4. 6(150) Skip-Dash (White) — 10' (3.05m) / 30' (9.14m) / 10' (3.05m) (See Special Note 1)
5. 8(200) Solid (White)
6. 12(300) Diagonal (White) (Item 6 is shown on Std. 780001)
7. 24(600) Stop Bar (White)
8. Letters & Arrows — 33' (10m) (See Std. 780001 and Special Notes 2 & 3)
9. 4(100) Skip-Dash (Yellow) — 10' (3.05m) / 30' (9.14m) / 10' (3.05m) (See Special Note 1)
10. 12(300) Diagonal (Yellow) (See Table A) — 45°
11. 4(100) Double Solid (Yellow) — 11(280) C.-C. — See Table A

SPECIAL NOTES

1. Skip-Dash markings will be centered between both ends of city blocks and shall be placed in alignment transversely across the pavement.
2. The following shall apply to arrows located in one-way left turn lanes:
   A. A minimum of two (2) arrows is required.
   B. The maximum spacing between arrows is 80' (24 m).
   C. Arrows shall be evenly spaced if three (3) or more are required.
3. The following shall apply to arrow pairs located in two-way left turn lanes:
   A. A minimum of two (2) arrow pairs is required.
   B. The maximum spacing between arrow pairs is 200' (61 m).
   C. Arrow pairs shall be evenly spaced if three (3) or more are required.
   D. The spacing between Bi Directional Left Turn Arrows is 33' (10 m).

GENERAL NOTES

1. Refer to State Standard 780001 for additional Pavement Markings including letters & arrows.
2. See Plans for Pavement Markings adjacent to curbed islands and medians, and through lane reductions.
3. Refer to Article 780.13 for letter, number and symbol areas (sq. ft.)
4. Areas are grooved 1" beyond each edge for the following symbols:
   Through Arrow= 14.8 sq. ft.
   Large Left or Right Arrow= 21.9 sq. ft.
   2 Arrow Combination Left (or Right) and Through= 34.9 sq. ft.
   Wrong Way Arrow= 29.5 sq. ft.
   Railroad Crossing Symbol= 69.8 sq. ft.
   (For further information, refer to BDE Special Provision: Grooving for Recessed Pavement Markings)

MODEL: 780001-D4 - 1
FILE NAME: c:\bms\keg-pw-01\new user\dms25419\D468E33-sh-D4 Details.dgn

Kaskaskia Engineering Group, LLC
PROFESSIONAL REGISTRATIONS
Illinois Professional Design Firm
Professional Engineering Group
200 E. Main St., Suite 100
Carbondale, Illinois 62901
618.233.8677 phone
618.233.8677 fax
www.kaskaskiaeng.com
LICENSE NO.
184.001973
20-5306595

USER NAME = rjo	DESIGNED - RJO	REVISED -	
	DRAWN - RJO	REVISED -	
	CHECKED - EJL	REVISED -	
PLOT DATE = 12/1/2025	DATE -	REVISED -	

STATE OF ILLINOIS
DEPARTMENT OF TRANSPORTATION

TYPICAL PAVEMENT MARKINGS

SCALE: | SHEET 1 OF 2 SHEETS | STA. | TO STA.

DISTRICT 4 DETAIL NO. 780001

F.A.P. RTE.	SECTION	COUNTY	TOTAL SHEETS	SHEET NO.
318	(3-B)BR	MARSHALL	72	62

CONTRACT NO. 68E33

ILLINOIS | FED. AID PROJECT

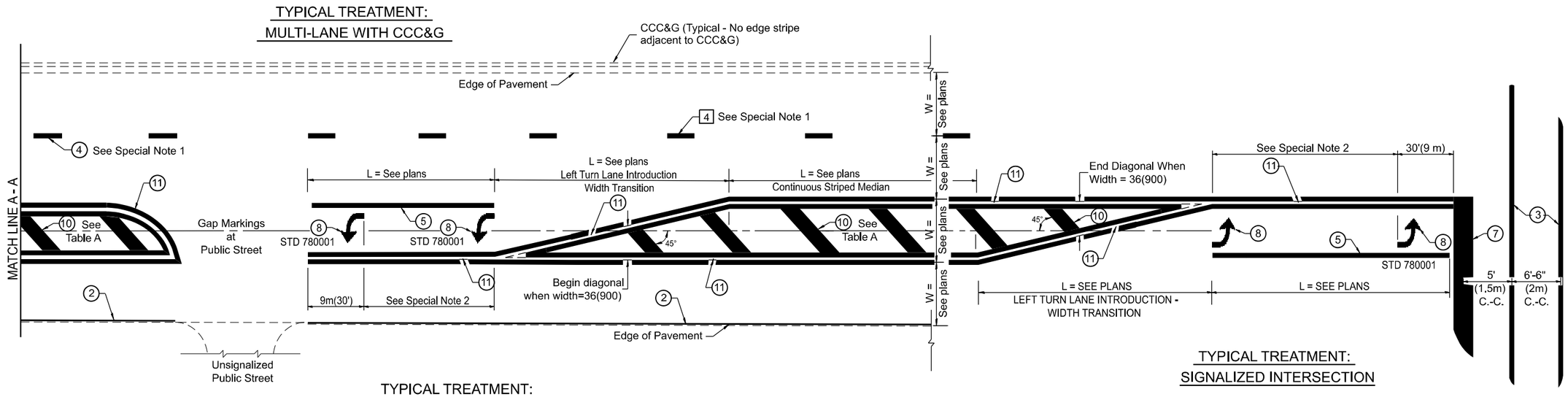

TYPICAL MEDIAN TRANSITIONS

FLUSH PAVED MEDIAN: RESTRICTED LEFT TURN LANE

TABLE A

RECOMMENDED SPACING BETWEEN DIAGONAL LINES

SPEED LIMIT RANGE	CONTINUOUS	INTERSECTION CHANNELIZATION (Includes Width Transitions for Median and Left Turn Lane Introductions)
Less Than 30 mph (50 km/h)	50' (15m)	15' (5m)
30 - 45 mph (50 - 70 km/h)	75' (23m)	20' (6m)
Over 45 mph (70 km/h)	150' (46m)	30' (9m)

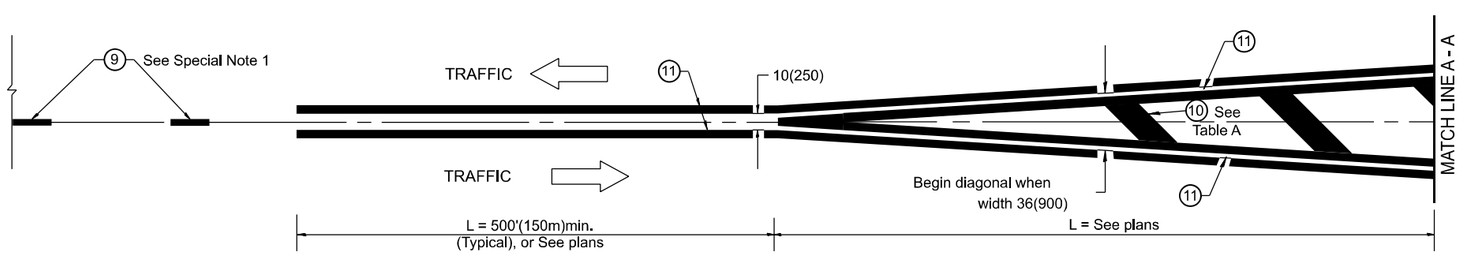

MEDIAN INTRODUCTION - WIDTH TRANSITIONS

All dimensions are in inches (millimeters) unless otherwise noted.

MODEL: 780001-D4 - 2
FILE NAME: c:\bms\keg-pw-01\new user\dms25419\D468E33-sht-D4 Details.dgn

Kaskaskia Engineering Group, LLC
PROFESSIONAL REGISTRATIONS: Illinois Professional Design Firm, Professional Engineering Group
LICENSE No. 184.001773, 20-5500586

USER NAME = rjo	DESIGNED - RJO	REVISED -	STATE OF ILLINOIS DEPARTMENT OF TRANSPORTATION
	DRAWN - RJO	REVISED -	
	CHECKED - EJL	REVISED -	
PLOT DATE = 12/1/2025	DATE -	REVISED -	

TYPICAL PAVEMENT MARKINGS

SCALE: | SHEET 2 OF 2 SHEETS | STA. | TO STA.

DISTRICT 4 DETAIL NO. 780001

F.A.P. RTE.	SECTION	COUNTY	TOTAL SHEETS	SHEET NO.
318	(3-B)BR	MARSHALL	72	63

CONTRACT NO. 68E33

ILLINOIS | FED. AID PROJECT

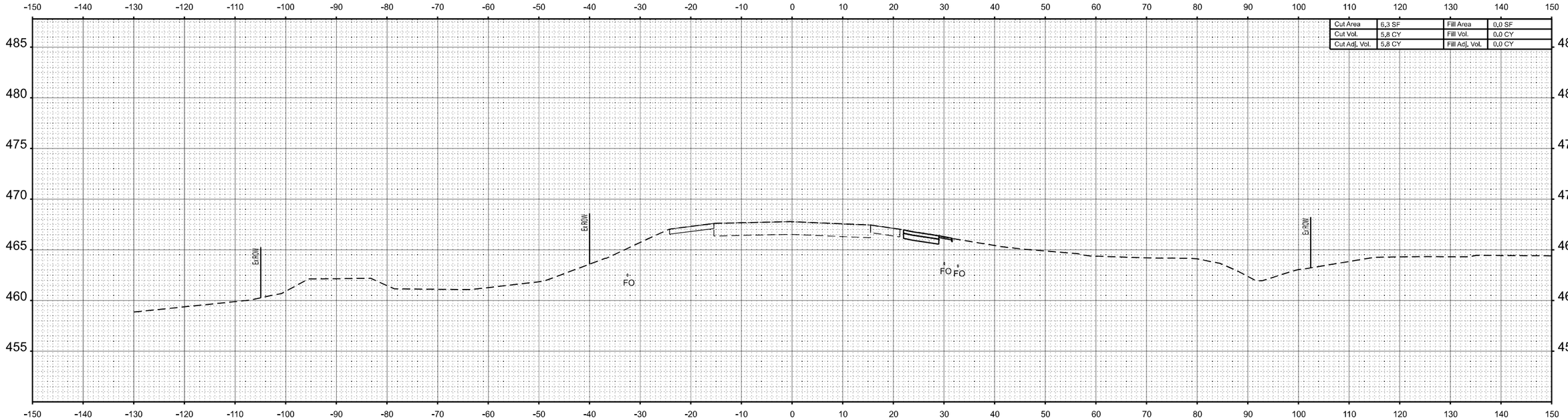

STA 1276+50.00

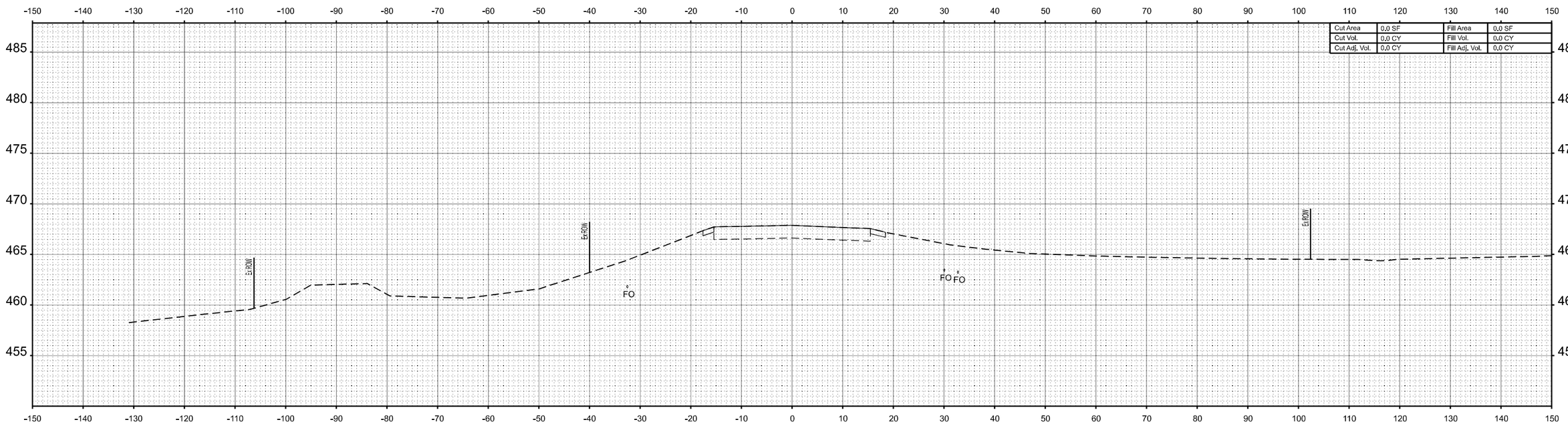

STA 1276+00.00

FINAL SURVEY	BY	DATE
SURVEYED		
PLOTTED		
TEMPLATE		
AREAS		
AREAS CHECKED		
NOTE BOOK NO.		

ORIGINAL SURVEY	BY	DATE
SURVEYED		
PLOTTED		
TEMPLATE		
AREAS		
AREAS CHECKED		
NOTE BOOK NO.		

MODEL: ExCL (new) - 1276+00.00 [Sheet]
FILE NAME: c:\bms\keg-pw-01\new user\dms25419\D468E33-sht-Cross Sections.dgn

USER NAME = rjo	DESIGNED -	REVISED -
	DRAWN -	REVISED -
	CHECKED -	REVISED -
PLOT DATE = 12/2/2025	DATE -	REVISED -

STATE OF ILLINOIS
DEPARTMENT OF TRANSPORTATION

CROSS SECTIONS - IL29
IL29 OVER BARRVILLE CREEK

SCALE: 1"=10' | SHEET 1 OF 9 SHEETS | STA. 1276+00.00 TO STA. 1276+50.00

F.A. RTE.	SECTION	COUNTY	TOTAL SHEETS	SHEET NO.
318	(3-B)BR	MARSHALL	72	64

CONTRACT NO. 68E33

ILLINOIS | FED. AID PROJECT

FINAL SURVEY		BY	DATE
NOTE BOOK	SURVEYED		
	PLOTTED		
	TEMPLATE		
	AREAS		
NO.	AREAS CHECKED		

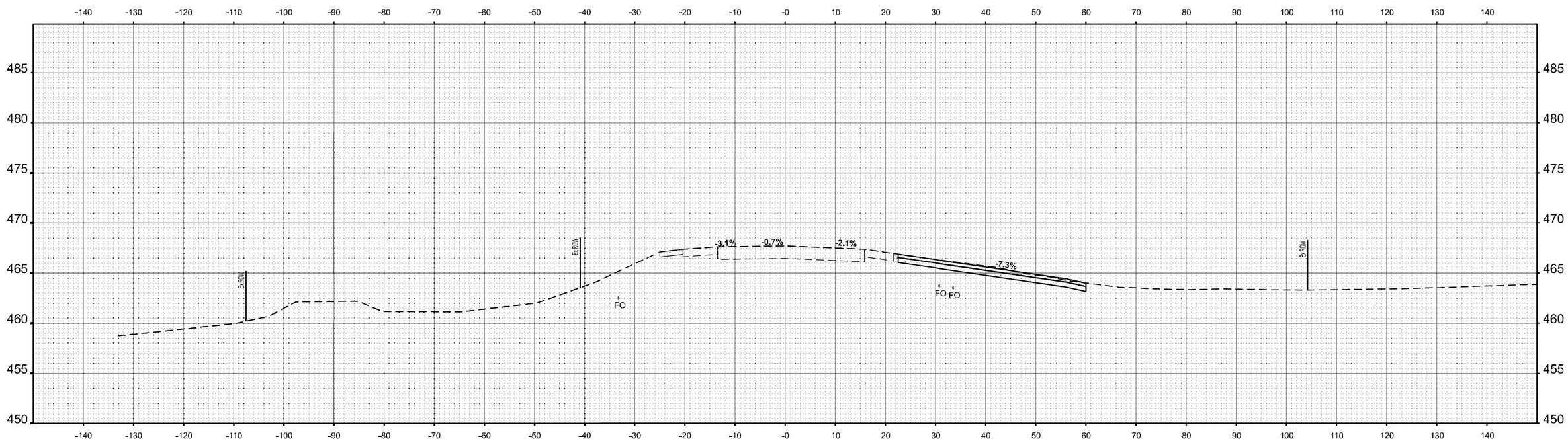

DRIVEWAY STA 1276+65.17

ORIGINAL SURVEY		BY	DATE
NOTE BOOK	SURVEYED		
	PLOTTED		
	TEMPLATE		
	AREAS		
NO.	AREAS CHECKED		

MODEL:
FILE NAME:

Kaskaskia Engineering Group, LLC
PROFESSIONAL REGISTRATIONS
Illinois Professional Design Firm
Professional Engineering Group

208 E. Main St., Suite 310
Belleville, Illinois 62220
618.233.1187 Ph.
618.233.1977 Fax.
www.kaskaskiaeng.com

LICENSE NO.
184.001771
20-5000586

USER NAME =	DESIGNED -	REVISED -
	DRAWN -	REVISED -
	CHECKED -	REVISED -
PLOT DATE =	DATE -	REVISED -

STATE OF ILLINOIS
DEPARTMENT OF TRANSPORTATION

CROSS SECTIONS - IL29
IL29 OVER BARRVILLE CREEK

SCALE: SHEET 2 OF 9 SHEETS STA. 1276+65.17 TO STA. 1276+65.17

F.A. RTE.	SECTION	COUNTY	TOTAL SHEETS	SHEET NO.
318	(3-B)BR	MARSHALL	72	65
		CONTRACT NO. 68E33		
		ILLINOIS	FED. AID PROJECT	

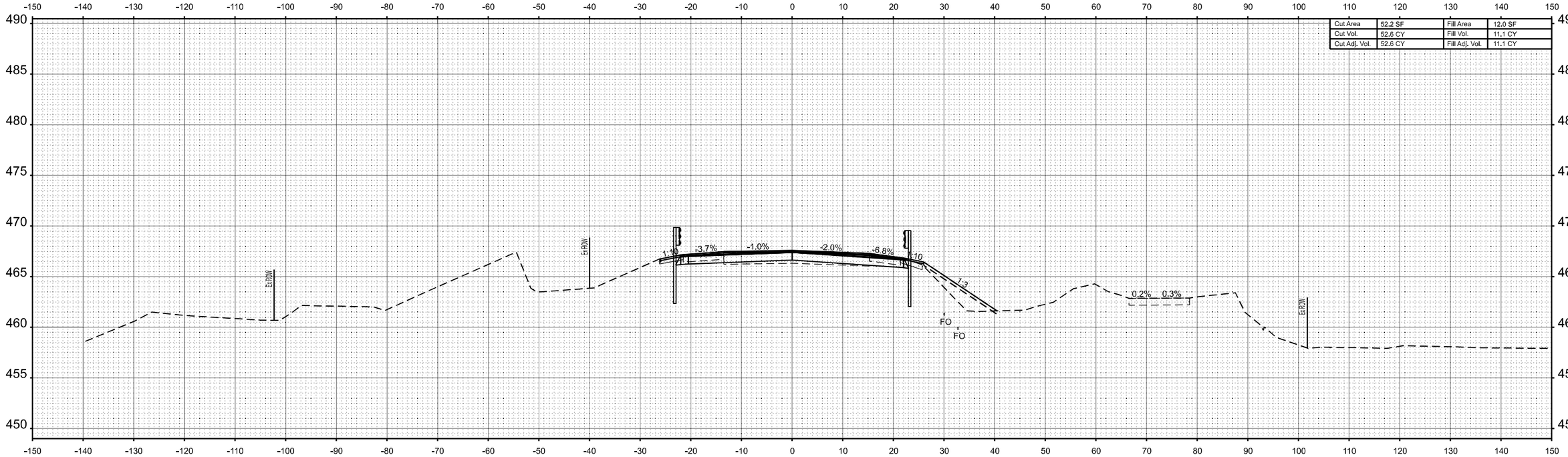

Cut Area	52.2 SF	Fill Area	12.0 SF
Cut Vol.	52.6 CY	Fill Vol.	11.1 CY
Cut Adj. Vol.	52.6 CY	Fill Adj. Vol.	11.1 CY

STA 1277+50.00

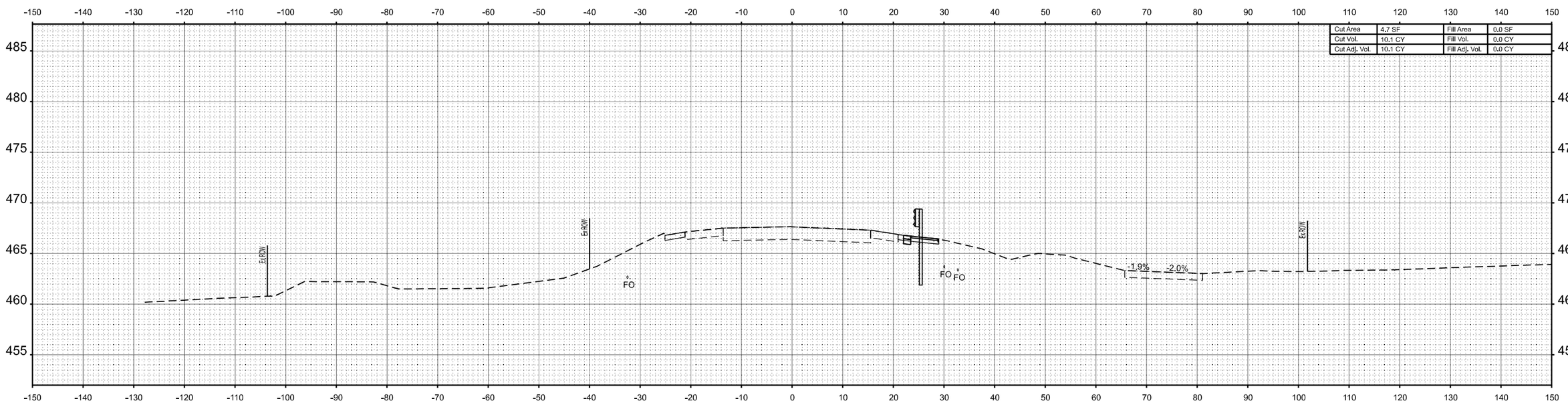

Cut Area	4.7 SF	Fill Area	0.0 SF
Cut Vol.	10.1 CY	Fill Vol.	0.0 CY
Cut Adj. Vol.	10.1 CY	Fill Adj. Vol.	0.0 CY

STA 1277+00.00

FINAL SURVEY	BY	DATE
SURVEYED		
PLOTTED		
TEMPLATE		
AREAS		
AREAS CHECKED		
NOTE BOOK NO.		

ORIGINAL SURVEY	BY	DATE
SURVEYED		
PLOTTED		
TEMPLATE		
AREAS		
AREAS CHECKED		
NOTE BOOK NO.		

MODEL: ExCL (new) - 1277+00.00 [Sheet]
FILE NAME: c:\bms\kegs-pw-01\new user\dms25419\D468E33-sht-Cross Sections.dgn

USER NAME = rjo	DESIGNED -	REVISED -
	DRAWN -	REVISED -
	CHECKED -	REVISED -
PLOT DATE = 12/2/2025	DATE -	REVISED -

STATE OF ILLINOIS
DEPARTMENT OF TRANSPORTATION

CROSS SECTIONS - IL29
IL29 OVER BARRVILLE CREEK

SCALE: 1"=10' | SHEET 3 OF 9 SHEETS | STA. 1277+00.00 TO STA. 1277+50.00

F.A. RTE.	SECTION	COUNTY	TOTAL SHEETS	SHEET NO.
318	(3-B)BR	MARSHALL	72	66

CONTRACT NO. 68E33

ILLINOIS | FED. AID PROJECT

FINAL SURVEY		BY	DATE
	SURVEYED		
	PLOTTED		
NOTE BOOK	TEMPLATE		
	AREAS		
NO.	AREAS CHECKED		

ORIGINAL SURVEY		BY	DATE
	SURVEYED		
	PLOTTED		
NOTE BOOK	TEMPLATE		
	AREAS		
NO.	AREAS CHECKED		

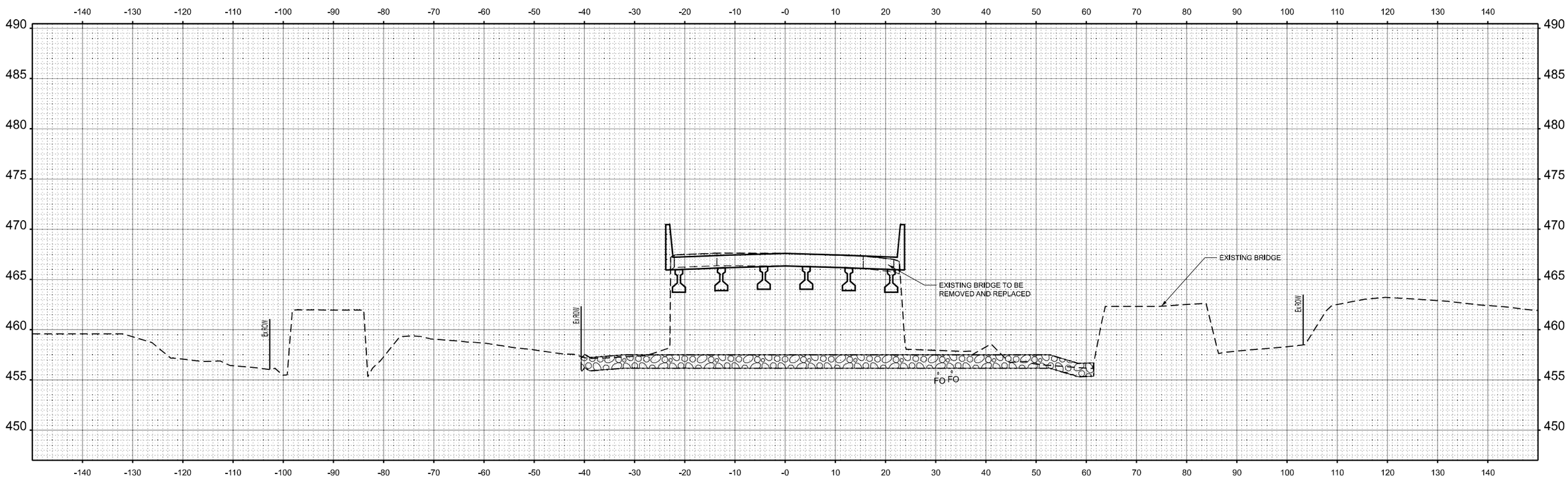

STA 1277+92.02 (skew)

MODEL: IL 29 Bridge - 1277+92.02 [Sheet]
FILE NAME: c:\bms\keg-pw-01\new user\dms25419\D468E33-sht-Cross Sections.dgn

USER NAME = rjo	DESIGNED -	REVISED -
	DRAWN -	REVISED -
	CHECKED -	REVISED -
PLOT DATE = 12/2/2025	DATE -	REVISED -

STATE OF ILLINOIS
DEPARTMENT OF TRANSPORTATION

CROSS SECTIONS - IL29
IL29 OVER BARRVILLE CREEK

SCALE: 1"=10' | SHEET 4 OF 9 SHEETS | STA. 1277+92.02 TO STA. 1277+92.02

F.A. RTE.	SECTION	COUNTY	TOTAL SHEETS	SHEET NO.
318	(3-B)BR	MARSHALL	72	67
		CONTRACT NO. 68E33		
		ILLINOIS	FED. AID PROJECT	

FINAL SURVEY		BY	DATE
NOTE BOOK NO.	SURVEYED		
	PLOTTED		
	TEMPLATE		
	AREAS		
	AREAS CHECKED		

ORIGINAL SURVEY		BY	DATE
NOTE BOOK NO.	SURVEYED		
	PLOTTED		
	TEMPLATE		
	AREAS		
	AREAS CHECKED		

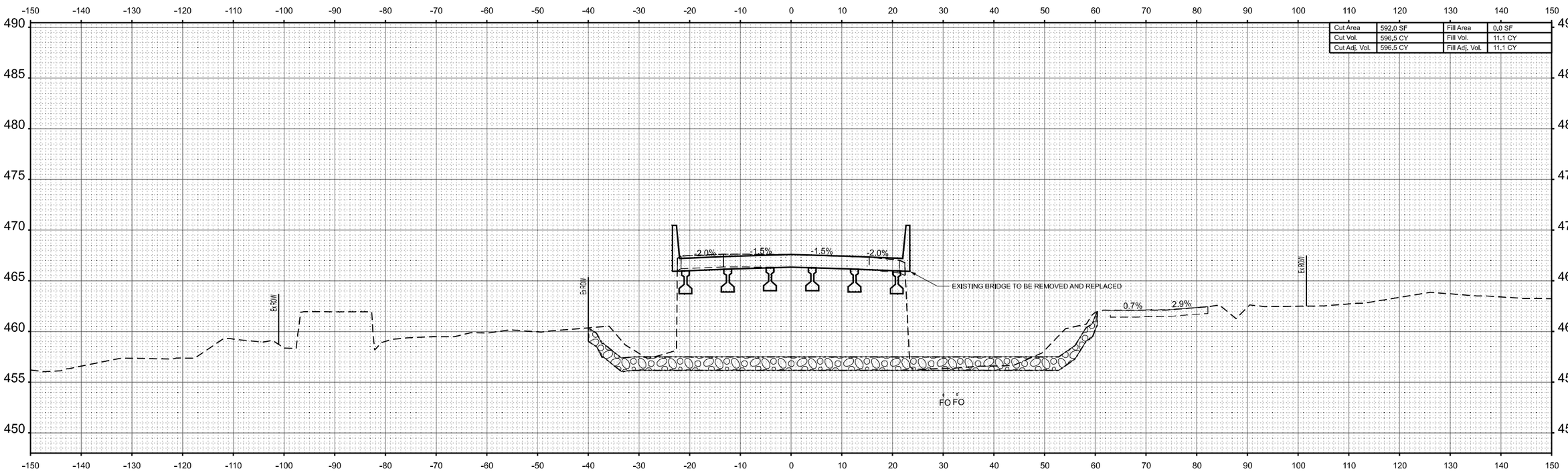

STA 1278+00.00

MODEL: ExCL (new) - 1278+00.00 [Sheet]
FILE NAME: c:\bms\kcg-pw-01\new user\dms25419\D468E33-sht-Cross Sections.dgn

USER NAME = rjo	DESIGNED -	REVISED -
	DRAWN -	REVISED -
	CHECKED -	REVISED -
PLOT DATE = 12/2/2025	DATE -	REVISED -

STATE OF ILLINOIS
DEPARTMENT OF TRANSPORTATION

CROSS SECTIONS - IL29
IL29 OVER BARRVILLE CREEK

SCALE: 1"=10' | SHEET 5 OF 9 SHEETS | STA. 1278+00.00 TO STA. 1278+00.00

F.A. RTE.	SECTION	COUNTY	TOTAL SHEETS	SHEET NO.
318	(3-B)BR	MARSHALL	72	68
		CONTRACT NO. 68E33		
		ILLINOIS FED. AID PROJECT		

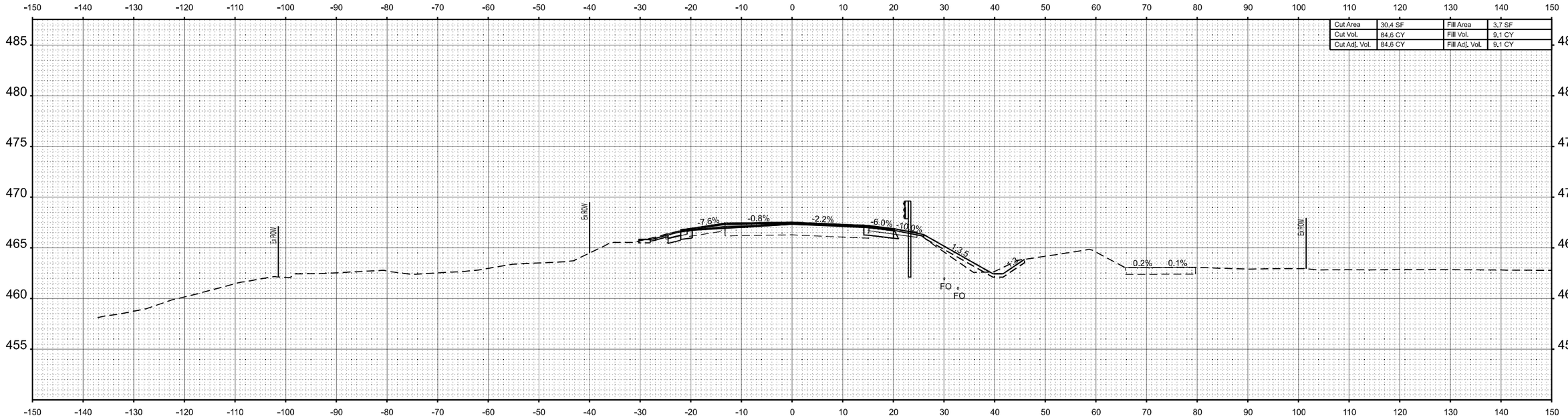

Cut Area	30.4 SF	Fill Area	3.7 SF
Cut Vol.	84.6 CY	Fill Vol.	9.1 CY
Cut Adj. Vol.	84.6 CY	Fill Adj. Vol.	9.1 CY

STA 1279+00.00

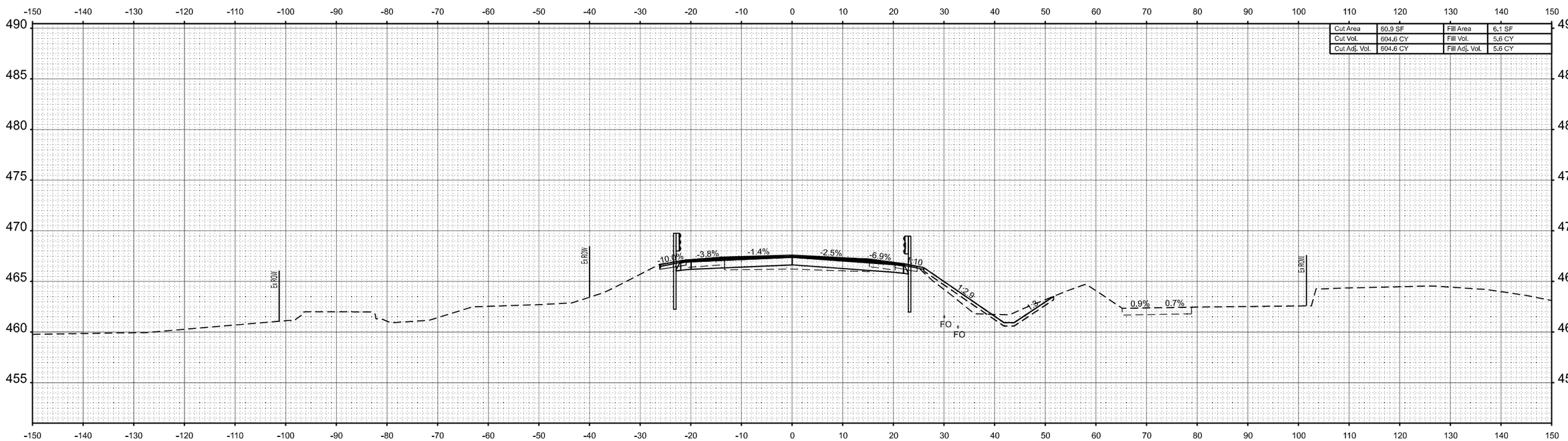

Cut Area	60.9 SF	Fill Area	6.1 SF
Cut Vol.	604.6 CY	Fill Vol.	5.6 CY
Cut Adj. Vol.	604.6 CY	Fill Adj. Vol.	5.6 CY

STA 1278+50.00

FINAL SURVEY	BY	DATE
SURVEYED		
PLOTTED		
TEMPLATE		
AREAS		
AREAS CHECKED		
NOTE BOOK		
NO.		

ORIGINAL SURVEY	BY	DATE
SURVEYED		
PLOTTED		
TEMPLATE		
AREAS		
AREAS CHECKED		
NOTE BOOK		
NO.		

MODEL: ExCL (new) - 1278+50.00 [Sheet]
FILE NAME: c:\bms\keg-pw-01\new user\dms25419\D468E33-sht-Cross Sections.dgn

USER NAME = rjo	DESIGNED -	REVISED -
	DRAWN -	REVISED -
	CHECKED -	REVISED -
PLOT DATE = 12/2/2025	DATE -	REVISED -

STATE OF ILLINOIS
DEPARTMENT OF TRANSPORTATION

CROSS SECTIONS - IL29
IL29 OVER BARRVILLE CREEK

SCALE: 1"=10' | SHEET 6 OF 9 SHEETS | STA. 1278+50.00 TO STA. 1279+00.00

F.A. RTE.	SECTION	COUNTY	TOTAL SHEETS	SHEET NO.
318	(3-B)BR	MARSHALL	72	69
		CONTRACT NO. 68E33		
	ILLINOIS	FED. AID PROJECT		

FINAL SURVEY		BY	DATE
NOTE BOOK	SURVEYED		
	PLOTTED		
	TEMPLATE		
	AREAS		
NO.	AREAS CHECKED		

ORIGINAL SURVEY		BY	DATE
NOTE BOOK	SURVEYED		
	PLOTTED		
	TEMPLATE		
	AREAS		
NO.	AREAS CHECKED		

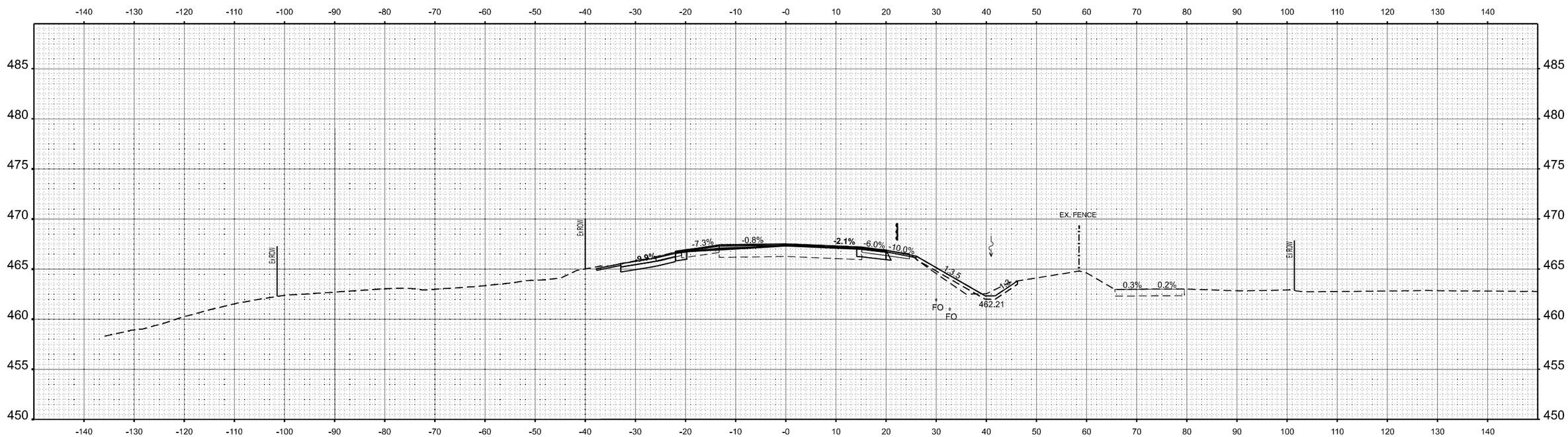

DRIVEWAY STA 1278+92.25

MODEL:
FILE NAME:

Kaskaskia Engineering Group, LLC
PROFESSIONAL REGISTRATIONS
Illinois Professional Design Firm 184.001011
Professional Engineering Group 20-5000586

208 E. Main St., Suite 310
Belleville, Illinois 62220
618.233.8117 phone
618.233.8977 fax
www.kaskaskiaeng.com

LICENSED NON-LICENSED

USER NAME =	DESIGNED -	REVISED -
	DRAWN -	REVISED -
	CHECKED -	REVISED -
PLOT DATE =	DATE -	REVISED -

STATE OF ILLINOIS
DEPARTMENT OF TRANSPORTATION

CROSS SECTIONS - IL29
IL29 OVER BARRVILLE CREEK

SCALE: SHEET 7 OF 9 SHEETS STA. 1278+92.25 TO STA. 1278+92.25

F.A. RTE.	SECTION	COUNTY	TOTAL SHEETS	SHEET NO.
318	(3-B)BR	MARSHALL	72	70
		CONTRACT NO. 68E33		
	ILLINOIS	FED. AID PROJECT		

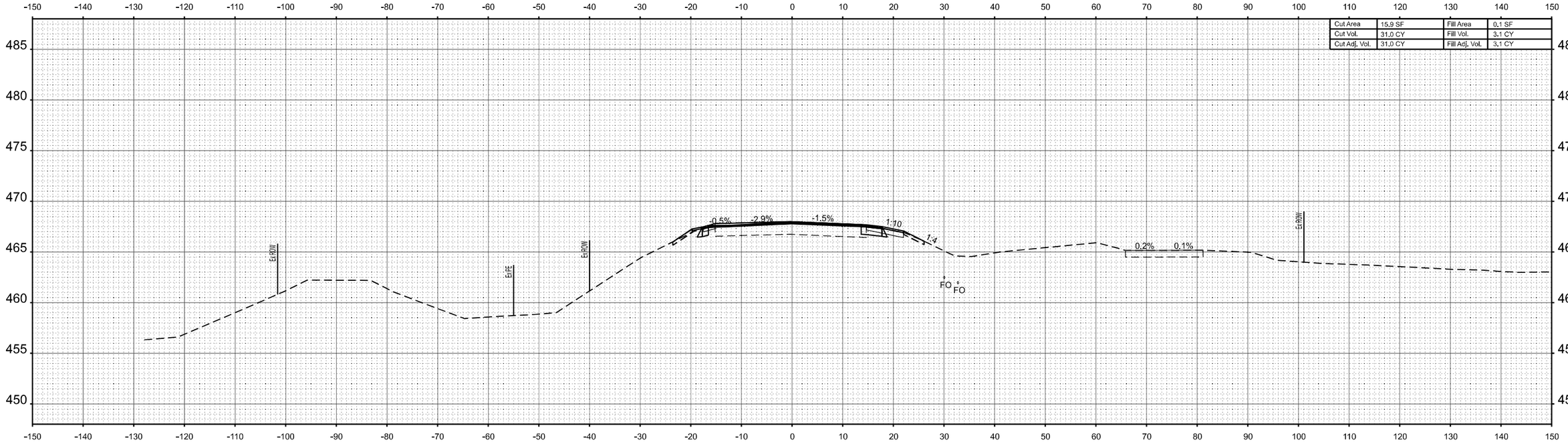

Cut Area	15.9 SF	Fill Area	0.1 SF
Cut Vol.	31.0 CY	Fill Vol.	3.1 CY
Cut Adj. Vol.	31.0 CY	Fill Adj. Vol.	3.1 CY

STA 1280+00.00

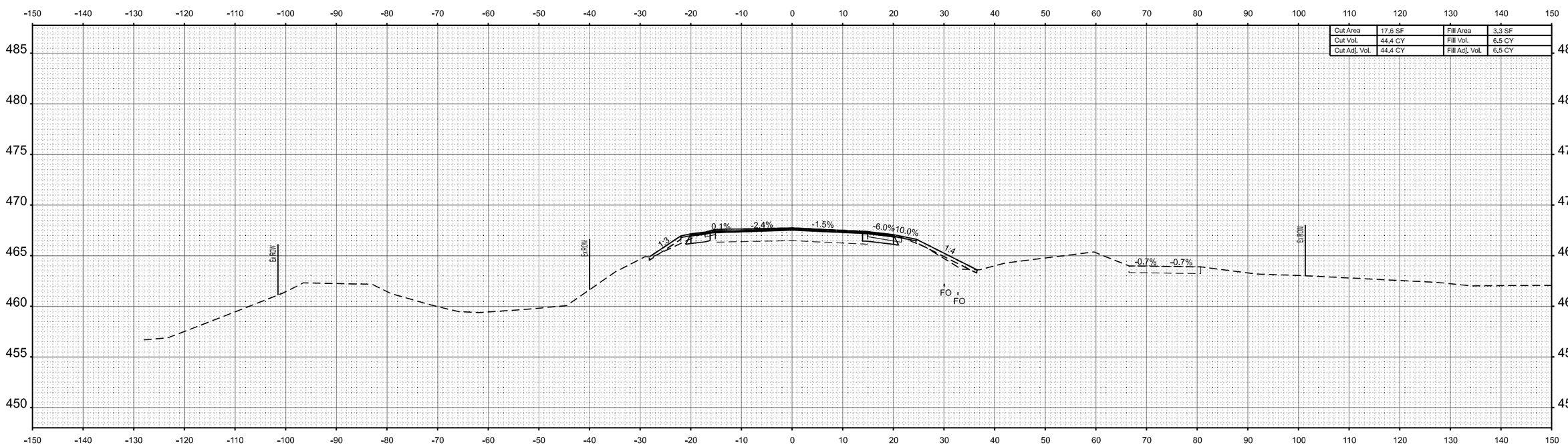

Cut Area	17.6 SF	Fill Area	3.3 SF
Cut Vol.	44.4 CY	Fill Vol.	6.5 CY
Cut Adj. Vol.	44.4 CY	Fill Adj. Vol.	6.5 CY

STA 1279+50.00

FINAL SURVEY	BY	DATE
SURVEYED		
PLOTTED		
TEMPLATE		
AREAS		
AREAS CHECKED		
NOTE BOOK		
NO.		

ORIGINAL SURVEY	BY	DATE
SURVEYED		
PLOTTED		
TEMPLATE		
AREAS		
AREAS CHECKED		
NOTE BOOK		
NO.		

MODEL: ExCL (new) - 1279+50.00 [Sheet]
FILE NAME: c:\bms\keg-pw-01\new user\dms25419\D468E33-sht-Cross Sections.dgn

USER NAME = rjo	DESIGNED -	REVISED -
	DRAWN -	REVISED -
	CHECKED -	REVISED -
PLOT DATE = 12/2/2025	DATE -	REVISED -

STATE OF ILLINOIS
DEPARTMENT OF TRANSPORTATION

CROSS SECTIONS - IL29
IL29 OVER BARRVILLE CREEK

SCALE: 1"=10' | SHEET 8 OF 9 SHEETS | STA. 1279+50.00 TO STA. 1280+00.00

F.A. RTE.	SECTION	COUNTY	TOTAL SHEETS	SHEET NO.
318	(3-B)BR	MARSHALL	72	71

CONTRACT NO. 68E33

ILLINOIS | FED. AID PROJECT

FINAL SURVEY		BY	DATE
NOTE BOOK	SURVEYED		
	PLOTTED		
	TEMPLATE		
	AREAS		
NO.	AREAS CHECKED		

ORIGINAL SURVEY		BY	DATE
NOTE BOOK	SURVEYED		
	PLOTTED		
	TEMPLATE		
	AREAS		
NO.	AREAS CHECKED		

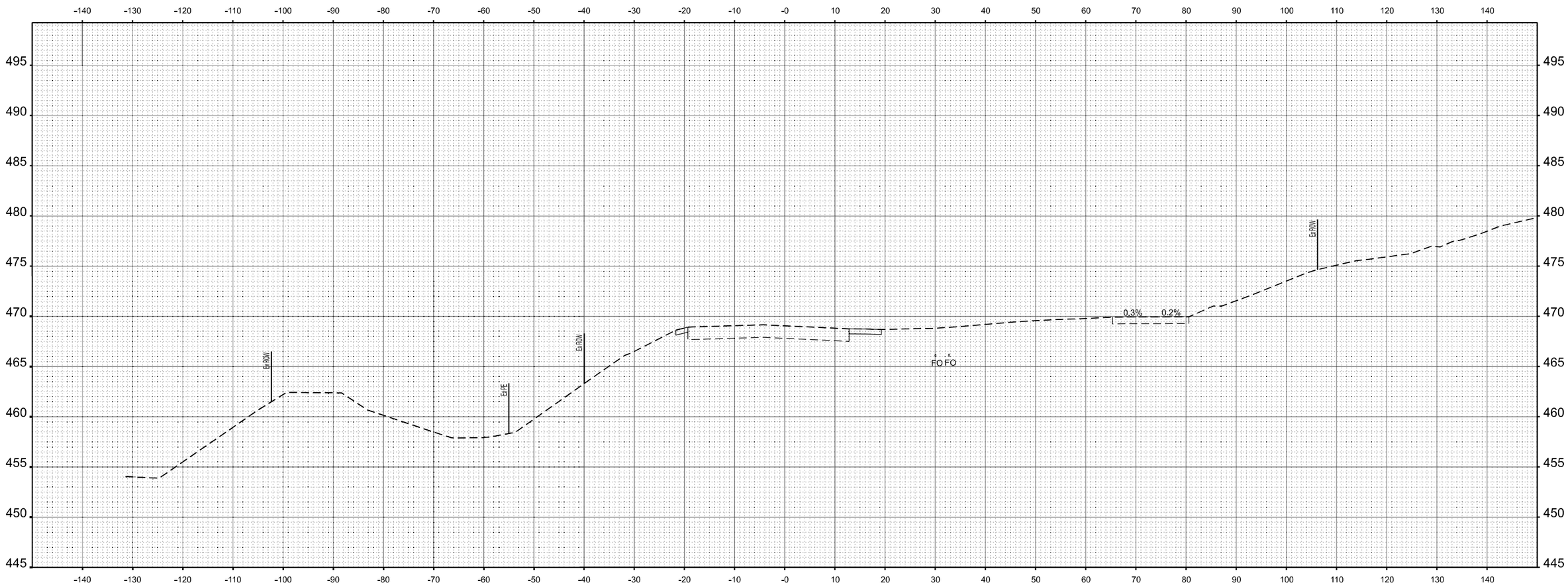

DRIVEWAY STA 1281+95.59

MODEL:
FILE NAME:

Kaskaskia Engineering Group, LLC
PROFESSIONAL REGISTRATIONS
Illinois Professional Design Firm
Professional Engineering Group
208 E. Main St., Suite 310
Belleville, Illinois 62220
618.233.8072 phone
618.233.1977 fax
www.kaskaskieng.com
LICENSE NO.
184.004775
20-5000504

USER NAME =	DESIGNED -	REVISED -
	DRAWN -	REVISED -
	CHECKED -	REVISED -
PLOT DATE =	DATE -	REVISED -

STATE OF ILLINOIS
DEPARTMENT OF TRANSPORTATION

CROSS SECTIONS - IL29
IL29 OVER BARRVILLE CREEK

SCALE: SHEET 9 OF 9 SHEETS STA. 1281+95.59 TO STA. 1281+95.59

F.A. RTE.	SECTION	COUNTY	TOTAL SHEETS	SHEET NO.
318	(3-B)BR	MARSHALL	72	72
		CONTRACT NO. 68E33		
		ILLINOIS	FED. AID PROJECT	