02-27-2026 LETTING ITEM 036

F.A.I. RTE.	SECTION	COUNTY	TOTAL SHEETS	SHEET NO.
55	(57-3)BR	MCLEAN	126	1
		ILLINOIS	CONTRACT NO. 70F37	

STATE OF ILLINOIS
DEPARTMENT OF TRANSPORTATION

PROPOSED HIGHWAY PLANS

FAI ROUTE 55 (I-55)
SECTION (57-3)BR
PROJECT NHPP-9JY1(467)
BRIDGE DECK OVERLAY
MCLEAN COUNTY

C-95-055-22

FOR INDEX OF SHEETS, SEE SHEET NO. 2
FOR SUMMARY OF QUANTITIES, SEE SHEET NO. 3-10

FUNCTIONAL CLASSIFICATION
INTERSTATE HIGHWAY (I-55)
MINOR ARTERIAL, 4 LANES (CH 29)

STRUCTURES TO BE REPAIRED
SN 057-0162 - CH 29 OVER I-55
SN 057-0163 - I-55 OVER MONEY CREEK (SB)
SN 057-0164 - I-55 OVER MONEY CREEK (NB)

TRAFFIC INFORMATION

LEG*	A	B	C	D
2023 ADT =	25000	3650	12000	11800
PV% =	68.5	90.4	67.9	64.0
SU% =	3.7	5.2	3.8	4.0
MU% =	27.8	4.4	28.3	32.0

LEG A: ON I-55 UNDER CH 29 (SN 057-0162)
LEG B: ON CH 29 OVER I-55 (SN 057-0162)
LEG C: ON I-55 SB OVER SN 057-0163 AT MONEY CREEK
LEG D: ON I-55 NB OVER SN 057-0164 AT MONEY CREEK

CH 29 OVER I-55
STA. 259+35.85 (I-55)
STA. 50+00.00 (CH 29)
295'-0" BK. TO BK. OF APPROACH BENTS
SN 057-0162
OVERPASS
I-55 OVER MONEY CREEK
STA. 322+95.00 (I-55)
192'-5" BK. TO BK. OF ABUTMENT
SN 057-0163 (I-55 SB)
SN 057-0164 (I-55 NB)
MAINLINE

STATION EQUATION
STA. 259+35.85 (I-55) =
STA. 50+00.00 (CH 29)

AT CH 29 (OVERHEAD) 0.5 MI N OF TOWANDA &
AT MONEY CREEK 1.5 MI NE OF TOWANDA

EX. SN 057-0163
STA. 321+69.01 TO
STA. 323+61.43

EX. SN 057-0164
STA. 322+28.57 TO
STA. 324+20.90

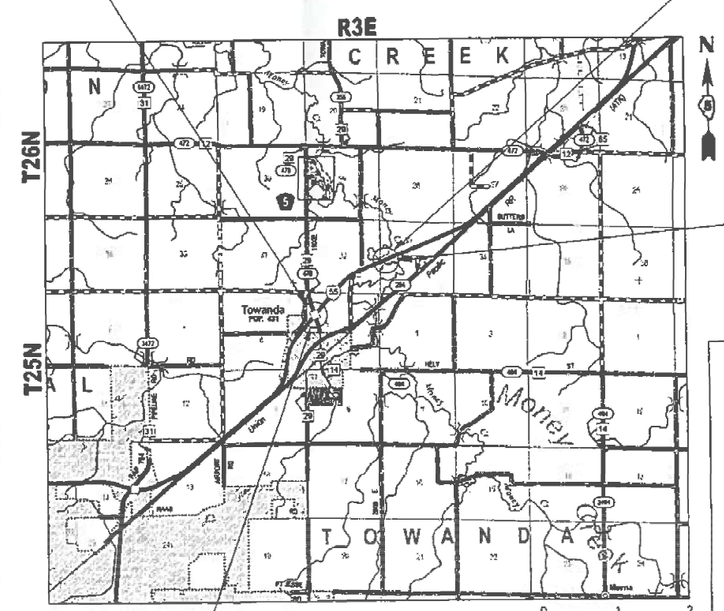

EX. SN 057-0162
STA. 48+52.50 TO
STA. 57+47.50

GROSS LENGTH = NET LENGTH = 487.42 FT. = 0.09 MILE

P-95-014-22

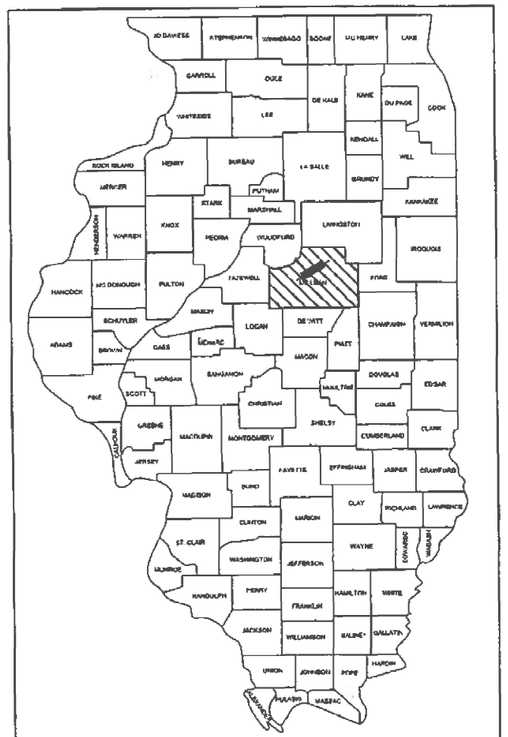

LOCATION OF SECTION INDICATED THUS: -

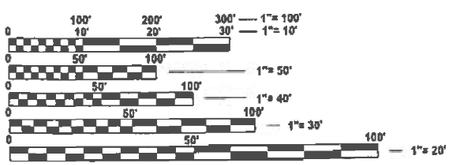

FULL SIZE PLANS HAVE BEEN PREPARED USING STANDARD ENGINEERING SCALES. REDUCED SIZED PLANS WILL NOT CONFORM TO STANDARD SCALES. IN MAKING MEASUREMENTS ON REDUCED PLANS, THE ABOVE SCALES MAY BE USED.

J.U.L.I.E.
JOINT UTILITY LOCATION INFORMATION FOR EXCAVATION
1-800-892-0123
OR 811
TOWNSHIP: MONEY CREEK, TOWANDA

STRAND ASSOCIATES, INC.
STEVEN R. BARBER, P.E.
THIS STAMP APPLIES TO
DRAWINGS NO. 1 TO 34 AND
118 TO 125
LICENSE NO. 062-072469

STEVEN R. BARBER 062-072469 LICENSED PROFESSIONAL ENGINEER OF ILLINOIS

DATE: 10/22/2025 EXP: 11/30/2027

AMES ENGINEERING, INC.
JOSEPH REGIS, P.E.
THIS STAMP APPLIES TO
DRAWINGS NO. 35 TO 62
AND 126
LICENSE NO. 062-047290

JOSEPH A. REGIS 062-047290 LICENSED PROFESSIONAL ENGINEER OF ILLINOIS

DATE: 10/22/2025 EXP: 11/30/2027

STRAND ASSOCIATES, INC.
NATHAN D. RICK, S.E.
THIS STAMP APPLIES TO
DRAWINGS NO. 63 TO 117
LICENSE NO. 081-007039

NATHAN D. RICK 081-007039 LICENSED STRUCTURAL ENGINEER OF ILLINOIS

DATE: 10/22/2025 EXP: 11/30/2026

STRAND ASSOCIATES
1170 SOUTH HOUBOLT ROAD
JOLIET, ILLINOIS 60431
(815) 744-4200
IDFPR NO. 184-001273

STATE OF ILLINOIS
DEPARTMENT OF TRANSPORTATION

SUBMITTED October 23 20 25
REGIONAL ENGINEER
January 23 20 26
ENGINEER OF DESIGN AND ENVIRONMENT
January 23 20 26
DIRECTOR OF HIGHWAYS PROJECT IMPLEMENTATION

PROJECT ENGINEER RYAN T. CARROLL, P.E.
PROJECT MANAGER CLARE DIETZ, P.E.
PHONE NUMBER: (217) 465-4181

CONTRACT NO. 70F37

PRINTED BY THE AUTHORITY OF THE STATE OF ILLINOIS

INDEX OF SHEETS

GENERAL NOTES

G.N.-100B

MICROSTATION AND GEOPAK FILES OF THIS PROJECT WILL BE MADE AVAILABLE TO THE CONTRACTOR AFTER CONTRACT AWARD. IF THERE IS A CONFLICT BETWEEN THE ELECTRONIC FILES AND THE PRINTED CONTRACT PLANS AND DOCUMENTS, THE PRINTED CONTRACT PLANS AND DOCUMENTS SHALL TAKE PRECEDENCE OVER THE ELECTRONIC FILES. THE CONTRACTOR SHALL ACCEPT ALL RISK ASSOCIATED WITH USING THE ELECTRONIC FILES AND SHALL HOLD THE DEPARTMENT HARMLESS FOR ANY ERRORS OR OMISSIONS IN THE ELECTRONIC FILES AND THE DATA CONTAINED THEREIN. ERRORS OR DELAYS RESULTING FROM THE USE OF THE ELECTRONIC FILES BY THE CONTRACTOR SHALL NOT RESULT IN AN EXTENSION OF TIME FOR ANY INTERIM OR FINAL COMPLETION DATE OR SHALL NOT BE CONSIDERED CAUSE FOR ADDITIONAL COMPENSATION. THE CONTRACTOR SHALL NOT USE, SHARE, OR DISTRIBUTE THESE ELECTRONIC FILES EXCEPT FOR THE PURPOSE OF CONSTRUCTING THIS CONTRACT. ANY CLAIMS BY THIRD PARTIES DUE TO USE OR ERRORS SHALL BE THE SOLE RESPONSIBILITY OF THE CONTRACTOR. THE CONTRACTOR SHALL INCLUDE THIS DISCLAIMER WITH THE TRANSFER OF THESE ELECTRONIC FILES TO ANY OTHER PARTIES AND SHALL INCLUDE APPROPRIATE LANGUAGE BINDING THEM TO SIMILAR RESPONSIBILITIES.

G.N.-105.09A

ALL ELEVATIONS SHOWN ON THE PLANS ARE BASED ON N.A.V.D. 88.

G.N.-406H Mixture Requirements Contract: 70F37

LOCATION(S):	I-55	I-55	I-55
MIXTURE USE(S):	SURFACE SHOULDER	BINDER SHOULDER	CLASS D PATCHES
AC/PG:	SBS PG 70-28	SBS PG 70-28	PG 64-22
DESIGN AIR VOIDS	4.0% @ Ndes=90	4.0% @ Ndes=90	4.0% @ Ndes=90
MIXTURE COMP (GRADATION)	IL 9.5	IL 9.5FG	IL 19.0
FRICTION AGGREGATE	Mix D	N.A.	N.A.
MIXTURE WEIGHT	112	112	112
QUALITY MANAGE-MENT PROGRAM	QC/QA	QC/QA	QC/QA
SUBLOT SIZE	3000	3000	3000
MATERIAL TRANSFER DEVICE (REQUIRED?)	NO	NO	NO

G.N.-440B

THE EXISTING TIE BARS BETWEEN THE EXISTING PAVEMENT AND EXISTING MEDIANS, GUTTERS AND/OR COMBINATION CURB AND GUTTERS THAT ARE FOUND SUITABLE FOR REUSE SHALL BE CLEANED, STRAIGHTENED AND INCORPORATED INTO THE NEW CONSTRUCTION. ANY EXISTING TIE BARS THAT ARE FOUND UNSUITABLE TO BE INCORPORATED INTO THE PROPOSED CONSTRUCTION DUE TO EXCESSIVE RUSTING OR DISTRESS SHALL BE REMOVED FLUSH WITH THE FACE OF THE EXISTING CONCRETE AND DISPOSED OF OUTSIDE THE LIMITS OF THE RIGHT- OF- WAY IN ACCORDANCE WITH ARTICLE 202.03 OF THE STANDARD SPECIFICATIONS.

THIS WORK WILL NOT BE PAID FOR SEPARATELY BUT SHALL BE CONSIDERED INCLUDED IN THE VARIOUS REMOVAL PAY ITEMS AND NO ADDITIONAL COMPENSATION WILL BE ALLOWED.

G.N.-781

THE FINAL PAVEMENT MARKINGS SHALL BE IN PLACE PRIOR TO PLACING THE RAISED REFLECTIVE PAVEMENT MARKERS.

HIGHWAY STANDARDS

000001-09	STANDARD SYMBOLS, ABBREVIATIONS AND PATTERNS
001001-02	AREAS OF REINFORCEMENT BARS
001006	DECIMAL OF INCH & FOOT
420401-13	PAVEMENT CONNECTOR (PCC) FOR BRIDGE APPROACH SLAB
482006-03	HMA SHOULDER ADJACENT TO RIGID PAVEMENT
601101-02	CONCRETE HEADWALL FOR PIPE UNDERDRAIN
630001-13	STEEL PLATE BEAM GUARDRAIL
631011-10	TRAFFIC BARRIER TERMINAL, TYPE 2
631026-06	TRAFFIC BARRIER TERMINAL, TYPE 5
631031-18	TRAFFIC BARRIER TERMINAL, TYPE 6
642001-03	SHOULDER RUMBLE STRIPS, 16 IN.
701001-02	OFF-ROAD OPERATIONS, 2L, 2W, MORE THAN 15' (4.5 M) AWAY
701006-05	OFF-ROAD OPERATIONS, 2L, 2W, 15' (4.5 M) AWAY TO 24" (600 MM) FROM PAVEMENT EDGE
701101-05	OFF-ROAD OPERATIONS, MULTILANE, 15' (4.5 M) TO 24" (600 MM) FROM PAVEMENT EDGE
701106-02	OFF-ROAD OPERATIONS, MULTILANE, MORE THAN 15' (4.5 M) AWAY
701201-05	LANE CLOSURE, 2L, 2W, DAY ONLY, FOR SPEEDS > 45 MPH
701316-14	LANE CLOSURE, 2L, 2W, BRIDGE REPAIR
701321-19	LANE CLOSURE, 2L, 2W, BRIDGE REPAIR WITH BARRIER
701400-12	APPROACH TO LANE CLOSURE, FREEWAY/EXPRESSWAY
701402-12	LANE CLOSURE, FREEWAY/EXPRESSWAY, WITH BARRIER
701406-13	LANE CLOSURE, FREEWAY/EXPRESSWAY, DAY OPERATIONS ONLY
701411-09	LANE CLOSURE, MULTILANE, AT ENTRANCE OR EXIT RAMP, FOR SPEEDS > 45 MPH
701426-09	LANE CLOSURE, MULTILANE, INTERMITTENT OR MOVING OPER., FOR SPEEDS > 45 MPH
701428-01	TRAFFIC CONTROL SETUP AND REMOVAL FREEWAY/EXPRESSWAY
701901-11	TRAFFIC CONTROL DEVICES
704001-08	TEMPORARY CONCRETE BARRIER
725001-01	OBJECT AND TERMINAL MARKERS
780001-05	TYPICAL PAVEMENT MARKINGS
782006-01	GUARDRAIL AND BARRIER WALL REFLECTOR MOUNTING DETAILS
880001-01	SPAN WIRE MOUNTED SIGNALS AND FLASHING BEACON INSTALLATION

COMMITMENTS

NONE

			LOCATION OF WORK:	FAI 55	FAI 55
				INTERSTATE	INTERSTATE
				URBAN	URBAN
				STRUCTURE	STRUCTURE
				S.N. 057-0163	
				S.N. 057-0164	S.N. 057-0162
			COUNTY:	MCLEAN	MCLEAN
			FUNDING BREAKOUT:	90% FED / 10% STATE	90% FED / 10% STATE
			CONSTRUCTION CODE:	0059	0059
CODE NO.	**ITEM**	**UNIT**	**TOTAL QUANTITY**	**QUANTITY**	**QUANTITY**
20200100	EARTH EXCAVATION	CU YD	275	205	70
31101200	SUBBASE GRANULAR MATERIAL, TYPE B, 4 INCH	SQ YD	173		173
31200100	STABILIZED SUBBASE 4 INCH	SQ YD	394	394	
35400400	PORTLAND CEMENT CONCRETE BASE COURSE WIDENING 9 INCH	SQ YD	173		173
40600275	BITUMINOUS MATERIALS (PRIME COAT)	POUND	1,404	1,404	
40600290	BITUMINOUS MATERIALS (TACK COAT)	POUND	867	867	
42000060	WELDED WIRE REINFORCEMENT	SQ YD	446	446	
42000080	PAVEMENT CONNECTOR (PCC) FOR BRIDGE APPROACH SLAB	SQ YD	446	446	
44000100	PAVEMENT REMOVAL	SQ YD	304	304	
44000161	HOT-MIX ASPHALT SURFACE REMOVAL, 3 INCH	SQ YD	3,015	3,015	
44000500	COMBINATION CURB AND GUTTER REMOVAL	FOOT	462		462
44004250	PAVED SHOULDER REMOVAL	SQ YD	989	989	
48101200	AGGREGATE SHOULDER, TYPE B	TON	219	219	
48102100	AGGREGATE WEDGE SHOULDER, TYPE B	TON	104	57	47

+ DENOTES SPECIALTY ITEM

			LOCATION OF WORK:	FAI 55	FAI 55
				INTERSTATE	INTERSTATE
				URBAN	URBAN
				STRUCTURE	STRUCTURE
				S.N. 057-0163	
				S.N. 057-0164	S.N. 057-0162
			COUNTY:	MCLEAN	MCLEAN
			FUNDING BREAKOUT:	90% FED / 10% STATE	90% FED / 10% STATE
			CONSTRUCTION CODE:	0059	0059
CODE NO.	**ITEM**	**UNIT**	**TOTAL QUANTITY**	**QUANTITY**	**QUANTITY**
48203037	HOT-MIX ASPHALT SHOULDERS, 10 INCH	SQ YD	624	624	
48203100	HOT-MIX ASPHALT SHOULDERS	TON	505	505	
50102400	CONCRETE REMOVAL	CU YD	199.0	84.8	114.2
50104650	SLOPE WALL REMOVAL	SQ YD	327	327	
50157300	PROTECTIVE SHIELD	SQ YD	984		984
50200100	STRUCTURE EXCAVATION	CU YD	350	350	
50300100	FLOOR DRAINS	EACH	60	44	16
50300225	CONCRETE STRUCTURES	CU YD	132.9	97.4	35.5
50300255	CONCRETE SUPERSTRUCTURE	CU YD	143.3	56.3	87.0
50300300	PROTECTIVE COAT	SQ YD	4,967	2,591	2,376
50301350	CONCRETE SUPERSTRUCTURE (APPROACH SLAB)	CU YD	231.4	231.4	
50500405	FURNISHING AND ERECTING STRUCTURAL STEEL	POUND	17,020	6,080	10,940
50800205	REINFORCEMENT BARS, EPOXY COATED	POUND	123,980	113,640	10,340
50800515	BAR SPLICERS	EACH	774	732	42

+ DENOTES SPECIALTY ITEM

			LOCATION OF WORK:	FAI 55	FAI 55
				INTERSTATE	INTERSTATE
				URBAN	URBAN
				STRUCTURE	STRUCTURE
				S.N. 057-0163	
				S.N. 057-0164	S.N. 057-0162
			COUNTY:	MCLEAN	MCLEAN
			FUNDING BREAKOUT:	90% FED / 10% STATE	90% FED / 10% STATE
			CONSTRUCTION CODE:	0059	0059
CODE NO.	**ITEM**	**UNIT**	**TOTAL QUANTITY**	**QUANTITY**	**QUANTITY**
50800530	MECHANICAL SPLICERS	EACH	8	8	
51100100	SLOPE WALL 4 INCH	SQ YD	327	327	
52000110	PREFORMED JOINT STRIP SEAL	FOOT	336.0	180.0	156.0
52100010	ELASTOMERIC BEARING ASSEMBLY, TYPE I	EACH	42	24	18
52100510	ANCHOR BOLTS, 3/4"	EACH	120	48	72
52200010	TEMPORARY SHEET PILING	SQ FT	1,236	1,236	
53004556	HOT-MIX ASPHALT SURFACE REMOVAL (DECK)	SQ YD	1,565		1565
53016000	DECK SLAB REPAIR (PARTIAL)	SQ YD	115	66	49
53016001	DECK SLAB REPAIR (FULL DEPTH, TYPE I)	SQ YD	35	31	4
53016002	DECK SLAB REPAIR (FULL DEPTH, TYPE II)	SQ YD	129	71	58
53101002	BRIDGE DECK SCARIFICATION 3/4"	SQ YD	1,470		1470
53101013	BRIDGE DECK SCARIFICATION 3 1/2"	SQ YD	1,567	1,567	
53101409	BRIDGE DECK LATEX CONCRETE OVERLAY, 2 1/2 INCHES	SQ YD	1,470		1470
53101414	BRIDGE DECK LATEX CONCRETE OVERLAY 3 3/4 INCHES	SQ YD	1,567	1,567	

+ DENOTES SPECIALTY ITEM

MODEL: SOQ SHEET 3 [Sheet]
FILE NAME: S:\JOL\6300-6399\6346\125\Drawings\CAD\ORD-10.12\CADsheets\D570F37-sht-SOQ.dgn

STRAND ASSOCIATES®
1170 SOUTH HOUBOLT ROAD
JOLIET, ILLINOIS 60431
(815) 744-4200

USER NAME = jaker	DESIGNED - SRB	REVISED -	
	DRAWN - JMR	REVISED -	
	CHECKED - MAG	REVISED -	
PLOT DATE = 10/3/2025	DATE - 10/22/2025	REVISED -	

STATE OF ILLINOIS
DEPARTMENT OF TRANSPORTATION

SUMMARY OF QUANTITIES

SCALE: SHEET 3 OF 8 SHEETS STA. TO STA.

F.A.I RTE.	SECTION	COUNTY	TOTAL SHEETS	SHEET NO.
55	(57-3)BR	MCLEAN	126	5
		CONTRACT NO. 70F37		
	ILLINOIS	FED. AID PROJECT		

REV. 11/17/25

			LOCATION OF WORK:	FAI 55	FAI 55
				INTERSTATE	INTERSTATE
				URBAN	URBAN
				STRUCTURE	STRUCTURE
				S.N. 057-0163	
				S.N. 057-0164	S.N. 057-0162
			COUNTY:	MCLEAN	MCLEAN
			FUNDING BREAKOUT:	90% FED / 10% STATE	90% FED / 10% STATE
			CONSTRUCTION CODE:	0059	0059
	CODE NO.	**ITEM**	**UNIT**	**TOTAL QUANTITY**	**QUANTITY**	**QUANTITY**
	53212754	STRUCTURAL REPAIR OF CONCRETE (DEPTH EQUAL TO OR LESS THAN 5 INCHES)	SQ FT	847	146	701
	58600101	GRANULAR BACKFILL FOR STRUCTURES	CU YD	287	287	
	58700300	CONCRETE SEALER	SQ FT	932	552	380
	59100100	GEOCOMPOSITE WALL DRAIN	SQ YD	155	155	
	59300100	CONTROLLED LOW-STRENGTH MATERIAL	CU YD	103	103	
	60100060	CONCRETE HEADWALLS FOR PIPE DRAINS	EACH	2	2	
	60146304	PIPE UNDERDRAINS FOR STRUCTURES 4"	FOOT	256	256	
+	63000001	STEEL PLATE BEAM GUARDRAIL, TYPE A, 6 FOOT POSTS	FOOT	437.5	62.5	375.0
+	63100045	TRAFFIC BARRIER TERMINAL, TYPE 2	EACH	2		2
+	63100070	TRAFFIC BARRIER TERMINAL, TYPE 5	EACH	2		2
+	63100085	TRAFFIC BARRIER TERMINAL, TYPE 6	EACH	6	4	2
+	63100167	TRAFFIC BARRIER TERMINAL, TYPE 1 (SPECIAL), TANGENT	EACH	2		2
	63200310	GUARDRAIL REMOVAL	FOOT	772	552	220
	64200116	SHOULDER RUMBLE STRIPS, 16 INCH	FOOT	4,040	4,040	

+ DENOTES SPECIALTY ITEM

MODEL: SOQ SHEET 4 [Sheet]
FILE NAME: S:\JOL\6300-6399\6346\125\Drawings\CAD\ORD-10.12\CADsheets\D570F37-sht-SOQ.dgn

STRAND ASSOCIATES®
1170 SOUTH HOUBOLT ROAD
JOLIET, ILLINOIS 60431
(815) 744-4200

USER NAME = jaker	DESIGNED - SRB	REVISED -	
	DRAWN - JMR	REVISED -	
	CHECKED - MAG	REVISED -	
PLOT DATE = 10/3/2025	DATE - 10/22/2025	REVISED -	

STATE OF ILLINOIS
DEPARTMENT OF TRANSPORTATION

SUMMARY OF QUANTITIES

SCALE: SHEET 4 OF 8 SHEETS STA. TO STA.

F.A.I RTE.	SECTION	COUNTY	TOTAL SHEETS	SHEET NO.
55	(57-3)BR	MCLEAN	126	6
		CONTRACT NO. 70F37		
		ILLINOIS	FED. AID PROJECT	

REV. 11/17/25

			LOCATION OF WORK:	FAI 55	FAI 55
				INTERSTATE	INTERSTATE
				URBAN	URBAN
				STRUCTURE	STRUCTURE
				S.N. 057-0163	
				S.N. 057-0164	S.N. 057-0162
			COUNTY:	MCLEAN	MCLEAN
			FUNDING BREAKOUT:	90% FED / 10% STATE	90% FED / 10% STATE
			CONSTRUCTION CODE:	0059	0059
CODE NO.	**ITEM**	**UNIT**	**TOTAL QUANTITY**	**QUANTITY**	**QUANTITY**
67000500	ENGINEER'S FIELD OFFICE, TYPE B	CAL MO	10	10	
67100100	MOBILIZATION	L SUM	1	1	
70300221	TEMPORARY PAVEMENT MARKING - LINE 4"- PAINT	FOOT	24,276	21,848	2,428
70300281	TEMPORARY PAVEMENT MARKING - LINE 24"- PAINT	FOOT	40		40
70307120	TEMPORARY PAVEMENT MARKING - LINE 4" - TYPE IV TAPE	FOOT	24,276	21,848	2,428
70307210	TEMPORARY PAVEMENT MARKING - LINE 24" - TYPE IV TAPE	FOOT	40		40
70400100	TEMPORARY CONCRETE BARRIER	FOOT	1,325.0	1,325.0	
70400125	PINNING TEMPORARY CONCRETE BARRIER	EACH	186	186	
70400200	RELOCATE TEMPORARY CONCRETE BARRIER	FOOT	450.0	450.0	
70600260	IMPACT ATTENUATORS, TEMPORARY (FULLY REDIRECTIVE, NARROW), TEST LEVEL 3	EACH	4	4	
70600332	IMPACT ATTENUATORS, RELOCATE (FULLY REDIRECTIVE, NARROW), TEST LEVEL 3	EACH	2	2	
* 72501000	TERMINAL MARKER - DIRECT APPLIED	EACH	2		2
+ 78000100	THERMOPLASTIC PAVEMENT MARKING - LETTERS AND SYMBOLS	SQ FT	94		94
+ 78000400	THERMOPLASTIC PAVEMENT MARKING - LINE 6"	FOOT	20,127	20,127	

+ DENOTES SPECIALTY ITEM

MODEL: ####
FILE NAME: S:\JOL\6300-6399\6346\125\Drawings\CAD\ORD-10.12\CADsheets\D570F37-sht-SOQ.dgn

STRAND ASSOCIATES®
1170 SOUTH HOUBOLT ROAD
JOLIET, ILLINOIS 60431
(815) 744-4200

USER NAME = StevenB	DESIGNED - SRB	REVISED -
	DRAWN - JMR	REVISED -
	CHECKED - MAG	REVISED -
PLOT DATE = 10/15/2025	DATE - 10/22/2025	REVISED -

STATE OF ILLINOIS
DEPARTMENT OF TRANSPORTATION

SUMMARY OF QUANTITIES

SCALE: SHEET 5 OF 8 SHEETS STA. TO STA.

F.A.I RTE.	SECTION	COUNTY	TOTAL SHEETS	SHEET NO.
55	(57-3)BR	MCLEAN	126	7

CONTRACT NO. 70F37

ILLINOIS FED. AID PROJECT

REV. 11/3/25

				LOCATION OF WORK:	FAI 55	FAI 55
					INTERSTATE	INTERSTATE
					URBAN	URBAN
					STRUCTURE	STRUCTURE
					S.N. 057-0163	
					S.N. 057-0164	S.N. 057-0162
				COUNTY:	MCLEAN	MCLEAN
				FUNDING BREAKOUT:	90% FED / 10% STATE	90% FED / 10% STATE
				CONSTRUCTION CODE:	0059	0059
	CODE NO.	**ITEM**	**UNIT**	**TOTAL QUANTITY**	**QUANTITY**	**QUANTITY**
+	78000500	THERMOPLASTIC PAVEMENT MARKING - LINE 8"	FOOT	652	652	
+	78000650	THERMOPLASTIC PAVEMENT MARKING - LINE 24"	FOOT	80		80
+	78004230	PREFORMED PLASTIC PAVEMENT MARKING, TYPE B - INLAID - LINE 6"	FOOT	2,617	2,617	
+	78008300	POLYUREA PAVEMENT MARKING TYPE II - LETTERS AND SYMBOLS	SQ FT	62		62
+	78008310	POLYUREA PAVEMENT MARKING TYPE II - LINE 4"	FOOT	5,953		5,953
+	78008330	POLYUREA PAVEMENT MARKING TYPE II - LINE 6"	FOOT	1,494		1,494
+	78011035	GROOVING FOR RECESSED PAVEMENT MARKING 7"	FOOT	22,744	22,744	
+	78011045	GROOVING FOR RECESSED PAVEMENT MARKING 9"	FOOT	652	652	
+	78100100	RAISED REFLECTIVE PAVEMENT MARKER	EACH	100	100	
*	78200005	GUARDRAIL REFLECTORS, TYPE A	EACH	8		8
*	78200011	BARRIER WALL REFLECTORS, TYPE C	EACH	20	12	8
	78300200	RAISED REFLECTIVE PAVEMENT MARKER REMOVAL	EACH	100	100	
	78300202	PAVEMENT MARKING REMOVAL - WATER BLASTING	SQ FT	10,070	9,063	1,007
	89000100	TEMPORARY TRAFFIC SIGNAL INSTALLATION	EACH	2		2

+ DENOTES SPECIALTY ITEM

MODEL: SOQ SHEET 6 [Sheet]
FILE NAME: S:\JOL\6300-63996346\125\Drawings\CAD\ORD-10.12\CADsheets\D570F37-sht-SOQ.dgn

STRAND ASSOCIATES®
1170 SOUTH HOUBOLT ROAD
JOLIET, ILLINOIS 60431
(815) 744-4200

USER NAME = jaker	DESIGNED - SRB	REVISED -
	DRAWN - JMR	REVISED -
	CHECKED - MAG	REVISED -
PLOT DATE = 10/3/2025	DATE - 10/22/2025	REVISED -

STATE OF ILLINOIS
DEPARTMENT OF TRANSPORTATION

SUMMARY OF QUANTITIES

SCALE: | SHEET 6 OF 8 SHEETS | STA. TO STA.

F.A.I. RTE.	SECTION	COUNTY	TOTAL SHEETS	SHEET NO.
55	(57-3)BR	MCLEAN	126	8
		CONTRACT NO. 70F37		
	ILLINOIS	FED. AID PROJECT		

REV. 11/3/25

			LOCATION OF WORK:	FAI 55	FAI 55
				INTERSTATE	INTERSTATE
				URBAN	URBAN
				STRUCTURE	STRUCTURE
				S.N. 057-0163	
				S.N. 057-0164	S.N. 057-0162
			COUNTY:	MCLEAN	MCLEAN
			FUNDING BREAKOUT:	90% FED / 10% STATE	90% FED / 10% STATE
			CONSTRUCTION CODE:	0059	0059
CODE NO.	**ITEM**	**UNIT**	**TOTAL QUANTITY**	**QUANTITY**	**QUANTITY**
X4210400	LUG SYSTEM REMOVAL	EACH	4	4	
X4402020	CONCRETE MEDIAN SURFACE REMOVAL	SQ FT	981		981
X5030250	BRIDGE DECK GROOVING (LONGITUDINAL)	SQ YD	2,756	1,341	1415
X5051204	STRUCTURAL STEEL REMOVAL	POUND	8,430	2190	6240
X5051206	STRUCTURAL STEEL REPAIR	POUND	14,310	1,370	12940
X5080530	BAR TERMINATORS	EACH	16	16	
X5110308	SLOPE WALL CRACK SEALING	FOOT	72.8	72.8	
X5110310	SLOPE WALL REPAIR	SQ YD	5	5	
X6061702	CONCRETE MEDIAN, TYPE SM (DOWELLED)	SQ FT	1,179		1179
X7010118	TEMPORARY RUMBLE STRIPS (SPECIAL)	EACH	12		12
X7010216	TRAFFIC CONTROL AND PROTECTION, (SPECIAL)	L SUM	1	1	
+ X7011854	REAL-TIME TRAFFIC CONTROL CENTRAL BASE UNIT	CAL MO	1	1	
+ X7011860	REAL-TIME TRAFFIC CONTROL WARNING SIGN	CAL MO	32	32	
+ X7011862	REAL-TIME TRAFFIC MONITORING SENSOR UNIT	CAL MO	64	64	

+ DENOTES SPECIALTY ITEM

MODEL: SOQ SHEET 7 [Sheet]
FILE NAME: S:\JOL\6300-6399\6346\125\Drawings\CAD\ORD-10.12\CADsheets\D570F37-sht-SOQ.dgn

STRAND ASSOCIATES®
1170 SOUTH HOUBOLT ROAD
JOLIET, ILLINOIS 60431
(815) 744-4200

USER NAME = jaker	DESIGNED - SRB	REVISED -	
	DRAWN - JMR	REVISED -	
	CHECKED - SRB	REVISED -	
PLOT DATE = 10/3/2025	DATE - 10/22/2025	REVISED -	

STATE OF ILLINOIS
DEPARTMENT OF TRANSPORTATION

SUMMARY OF QUANTITIES

SCALE: SHEET 7 OF 8 SHEETS STA. TO STA.

F.A.I. RTE.	SECTION	COUNTY	TOTAL SHEETS	SHEET NO.
55	(57-3)BR	MCLEAN	126	9
		CONTRACT NO. 70F37		
	ILLINOIS	FED. AID PROJECT		

REV. 12/8/25 REV. 11/17/25 REV. 11/3/25

			LOCATION OF WORK:	FAI 55	FAI 55
				INTERSTATE	INTERSTATE
				URBAN	URBAN
				STRUCTURE	STRUCTURE
				S.N. 057-0163	
				S.N. 057-0164	S.N. 057-0162
			COUNTY:	MCLEAN	MCLEAN
			FUNDING BREAKOUT:	90% FED / 10% STATE	90% FED / 10% STATE
			CONSTRUCTION CODE:	0059	0059
CODE NO.	**ITEM**	**UNIT**	**TOTAL QUANTITY**	**QUANTITY**	**QUANTITY**
X7200201	WIDTH RESTRICTION SIGNING	L SUM	1	1	
Z0001899	JACK AND REMOVE EXISTING BEARINGS	EACH	42	24	18
Z0004552	APPROACH SLAB REMOVAL	SQ YD	294	294	
Z0010400	CLEANING BRIDGE SEATS	SQ FT	856	552	304
Z0013798	CONSTRUCTION LAYOUT	L SUM	1	1	
Z0029090	DIAMOND GRINDING (BRIDGE SECTION)	SQ YD	3226	1926	1300
Ø Z0076600	TRAINEES	HOUR	1,500	1,500	
Ø Z0076604	TRAINEES - TRAINING PROGRAM GRADUATE	HOUR	1,500	1,500	

+ DENOTES SPECIALTY ITEM

Ø 0042

MODEL: ####
FILE NAME: S:\JOL\6300--6399\6346\125\Drawings\CAD\ORD-10.12\CADsheets\D570F37-sht-SOQ.dgn

STRAND ASSOCIATES®
1170 SOUTH HOUBOLT ROAD
JOLIET, ILLINOIS 60431
(815) 744-4200

USER NAME = jaker	DESIGNED - SRB	REVISED -	
	DRAWN - JMR	REVISED -	
	CHECKED - MAG	REVISED -	
PLOT DATE = 10/13/2025	DATE -	REVISED -	

STATE OF ILLINOIS
DEPARTMENT OF TRANSPORTATION

SUMMARY OF QUANTITIES

SCALE: SHEET 8 OF 8 SHEETS STA. TO STA.

F.A.I. RTE.	SECTION	COUNTY	TOTAL SHEETS	SHEET NO.
55	(57-3)BR	MCLEAN	126	10
		CONTRACT NO. 70F37		
	ILLINOIS	FED. AID PROJECT		

REV. 11/21/25 REV. 11/17/25

PRESTAGE

EARTHWORK SCHEDULE

LOCATION		EARTH EXCAVATION	*EARTH EXCAVATION ADJUSTED FOR SHRINKAGE (25%)	*EMBANKMENT	*EARTHWORK BALANCE WASTE (+) OR STORAGE (-)
STATION	STATION	CU YD	CU YD	CU YD	CU YD
I-55 SOUTHBOUND - PRESTAGE					
316+01.00	318+10.00	27.66	20.75	0.00	20.75
TOTALS		**28**	**21**	**0**	**21**

* COLUMN IS FOR INFORMATION ONLY

EARTHWORK SCHEDULE

LOCATION		EARTH EXCAVATION	*EARTH EXCAVATION ADJUSTED FOR SHRINKAGE (25%)	*EMBANKMENT	*EARTHWORK BALANCE WASTE (+) OR STORAGE (-)
STATION	STATION	CU YD	CU YD	CU YD	CU YD
I-55 NORTHBOUND - PRESTAGE					
327+80.00	329+89.00	27.66	20.75	0.00	20.75
TOTALS		**28**	**21**	**0**	**21**

* COLUMN IS FOR INFORMATION ONLY

EARTHWORK SCHEDULE

LOCATION		EARTH EXCAVATION	*EARTH EXCAVATION ADJUSTED FOR SHRINKAGE (25%)	*EMBANKMENT	*EARTHWORK BALANCE WASTE (+) OR STORAGE (-)
STATION	STATION	CU YD	CU YD	CU YD	CU YD
COUNTY HIGHWAY 29 - PRESTAGE					
044+30.57	045+50.00	31.16	23.37	0.00	23.37
045+50.00	054+40.80	0.00	0.00	0.00	0.00
054+40.80	055+79.76	36.10	27.08	0.00	27.08
TOTALS		**67**	**50**	**0**	**50**

* COLUMN IS FOR INFORMATION ONLY

STAGE 1

EARTHWORK SCHEDULE

LOCATION		EARTH EXCAVATION	*EARTH EXCAVATION ADJUSTED FOR SHRINKAGE (25%)	*EMBANKMENT	*EARTHWORK BALANCE WASTE (+) OR STORAGE (-)
STATION	STATION	CU YD	CU YD	CU YD	CU YD
I-55 SOUTHBOUND - STAGE 1					
316+83.00	318+10.00	16.81	12.61	0.00	12.61
318+10.00	321+09.08	0.00	0.00	0.00	0.00
321+09.08	321+79.03	17.63	13.22	0.00	13.22
321+79.03	323+80.56	0.00	0.00	0.00	0.00
323+80.56	324+18.75	10.05	7.54	0.00	7.54
TOTALS		**44**	**33**	**0**	**33**

* COLUMN IS FOR INFORMATION ONLY

EARTHWORK SCHEDULE

LOCATION		EARTH EXCAVATION	*EARTH EXCAVATION ADJUSTED FOR SHRINKAGE (25%)	*EMBANKMENT	*EARTHWORK BALANCE WASTE (+) OR STORAGE (-)
STATION	STATION	CU YD	CU YD	CU YD	CU YD
I-55 NORTHBOUND - STAGE 1					
321+70.75	322+08.94	9.87	7.40	0.00	7.40
322+08.94	324+10.80	0.00	0.00	0.00	0.00
324+10.80	324+80.43	17.45	13.09	0.00	13.09
324+80.43	327+80.00	0.00	0.00	0.00	0.00
327+80.00	329+06.00	16.67	12.50	0.00	12.50
TOTALS		**44**	**33**	**0**	**33**

* COLUMN IS FOR INFORMATION ONLY

STAGE 2

EARTHWORK SCHEDULE

LOCATION		EARTH EXCAVATION	*EARTH EXCAVATION ADJUSTED FOR SHRINKAGE (25%)	*EMBANKMENT	*EARTHWORK BALANCE WASTE (+) OR STORAGE (-)
STATION	STATION	CU YD	CU YD	CU YD	CU YD
I-55 SOUTHBOUND - STAGE 2					
321+09.08	321+57.83	12.99	9.74	0.00	9.74
321+57.83	323+59.30	0.00	0.00	0.00	0.00
323+59.30	324+18.75	17.71	13.28	0.00	13.28
TOTALS		**31**	**23**	**0**	**23**

* COLUMN IS FOR INFORMATION ONLY

EARTHWORK SCHEDULE

LOCATION		EARTH EXCAVATION	*EARTH EXCAVATION ADJUSTED FOR SHRINKAGE (25%)	*EMBANKMENT	*EARTHWORK BALANCE WASTE (+) OR STORAGE (-)
STATION	STATION	CU YD	CU YD	CU YD	CU YD
I-55 NORTHBOUND - STAGE 2					
321+70.75	322+30.19	17.78	13.34	0.00	13.34
322+30.19	324+32.00	0.00	0.00	0.00	0.00
324+32.00	324+80.43	13.09	9.82	0.00	9.82
TOTALS		**31**	**23**	**0**	**23**

* COLUMN IS FOR INFORMATION ONLY

SUMMARY

SUMMARY
EARTHWORK SCHEDULE

LOCATION		EARTH EXCAVATION	*EARTH EXCAVATION ADJUSTED FOR SHRINKAGE (25%)	*EMBANKMENT	*EARTHWORK BALANCE WASTE (+) OR STORAGE (-)
		CU YD	CU YD	CU YD	CU YD
PRESTAGE					
I-55 SOUTHBOUND		**28**	**21**	**0**	**21**
I-55 NORTHBOUND		**28**	**21**	**0**	**21**
COUNTY HIGHWAY 29		**67**	**50**	**0**	**50**
	SUBTOTAL	**123**	**92**	**0**	**92**
STAGE 1					
I-55 SOUTHBOUND		**44**	**33**	**0**	**33**
I-55 NORTHBOUND		**44**	**33**	**0**	**33**
	SUBTOTAL	**88**	**66**	**0**	**66**
STAGE 2					
I-55 SOUTHBOUND		**31**	**23**	**0**	**23**
I-55 NORTHBOUND		**31**	**23**	**0**	**23**
	SUBTOTAL	**62**	**46**	**0**	**46**
TOTAL QUANTITIES		**275**	**205**	**0**	**205**

* COLUMN IS FOR INFORMATION ONLY

MODEL: EARTH EXCAVATION-1 [Sheet]
FILE NAME: S:\JOL\6300-6399\6346\125\Drawings\CAD\ORD-10.12\CADsheets\D570F37-sht-Schedule-of-Quantities.dgn

STRAND ASSOCIATES®
1170 SOUTH HOUBOLT ROAD
JOLIET, ILLINOIS 60431
(815) 744-4200

USER NAME = jaker	DESIGNED - SRB	REVISED -
	DRAWN - JMR	REVISED -
	CHECKED - MAG	REVISED -
PLOT DATE = 9/17/2025	DATE - 10/22/2025	REVISED -

STATE OF ILLINOIS
DEPARTMENT OF TRANSPORTATION

COUNTY HIGHWAY 29 AND INTERSTATE 55 REHABILITATION
SCHEDULE OF QUANTITIES

SCALE: | SHEET 1 OF 3 SHEETS | STA. | TO STA.

F.A.I RTE.	SECTION	COUNTY	TOTAL SHEETS	SHEET NO.
55	(57-3)BR	MCLEAN	126	11

CONTRACT NO. 70F37
ILLINOIS | FED. AID PROJECT

SHOULDER REMOVAL

LOCATION				44000161 HOT-MIX ASPHALT SURFACE REMOVAL, 3"	44004250 PAVED SHOULDER REMOVAL
STATION	TO	STATION	INSIDE/OUTSIDE	SQ YD	SQ YD
PRESTAGE					
I-55 NORTHBOUND					
316+47.00	TO	320+00.00	OUTSIDE	389	
320+00.00	TO	321+74.75	OUTSIDE	189	
321+74.75	TO	322+40.14	OUTSIDE	67	
324+27.23	TO	324+76.43	OUTSIDE	52	
324+76.43	TO	326+00.00	OUTSIDE	140	
326+00.00	TO	327+80.00	OUTSIDE	203	
327+80.00	TO	329+89.00	OUTSIDE		235
I-55 SOUTHBOUND					
316+01.00	TO	318+10.00	OUTSIDE		229
318+10.00	TO	320+00.00	OUTSIDE	209	
320+00.00	TO	321+13.08	OUTSIDE	125	
321+13.08	TO	321+62.47	OUTSIDE	51	
323+49.68	TO	324+14.75	OUTSIDE	65	
324+14.75	TO	326+00.00	OUTSIDE	205	
326+00.00	TO	329+38.00	OUTSIDE	375	
STAGE 1					
I-55 NORTHBOUND					
317+25.00	TO	320+00.00	INSIDE	172	
320+00.00	TO	321+74.75	INSIDE	103	
321+74.74	TO	322+21.65	INSIDE		26
324+11.37	TO	324+76.43	INSIDE		36
324+76.43	TO	326+00.00	INSIDE	76	
326+00.00	TO	327+80.00	INSIDE	114	
327+80.00	TO	329+06.00	INSIDE		80
I-55 SOUTHBOUND					
316+83.00	TO	318+10.00	INSIDE		80
318+10.00	TO	320+00.00	INSIDE	122	
320+00.00	TO	321+13.08	INSIDE	72	
321+13.08	TO	321+78.47	INSIDE		40
323+67.94	TO	324+14.75	INSIDE		28
324+14.75	TO	326+00.00	INSIDE	121	
326+00.00	TO	328+56.00	INSIDE	164	
STAGE 2					
I-55 NORTHBOUND					
321+74.75	TO	322+40.14	OUTSIDE		67
324+27.23	TO	324+76.43	OUTSIDE		52
I-55 SOUTHBOUND					
321+13.08	TO	321+62.47	OUTSIDE		51
323+49.68	TO	324+14.75	OUTSIDE		65
TOTAL				3015	989

SHOULDERS

LOCATION				48101200 AGGREGATE SHOULDER, TYPE B	48102100 AGGREGATE WEDGE SHOULDER, TYPE B	48203037 HOT-MIX ASPHALT SHOULDERS, 10"	48203100 HOT-MIX ASPHALT SHOULDERS	64200116 SHOULDER RUMBLE STRIPS, 16 INCH
STATION	TO	STATION	INSIDE/OUTSIDE	TON	TON	SQ YD	TON	FOOT
PRESTAGE								
I-55 NORTHBOUND								
316+47.00	TO	320+00.00	OUTSIDE		6.0		65.3	353
320+00.00	TO	322+40.14	OUTSIDE		4.1		43.1	240
324+27.23	TO	326+00.00	OUTSIDE		2.9		32.1	173
326+00.00	TO	327+80.00	OUTSIDE		3.1		34.1	180
327+80.00	TO	329+89.00	OUTSIDE	38.1		235		209
I-55 SOUTHBOUND								
316+01.00	TO	318+10.00	OUTSIDE	38.1		229		209
318+10.00	TO	320+00.00	OUTSIDE		3.2		35.1	190
320+00.00	TO	321+62.47	OUTSIDE		2.8		29.5	162
323+49.68	TO	326+00.00	OUTSIDE		4.2		45.4	250
326+00.00	TO	329+38.00	OUTSIDE		5.7		63.0	338
COUNTY HIGHWAY 29 NORTHBOUND								
46+86.73	TO	48+25.00	OUTSIDE		11.5			
51+33.33	TO	52+72.93	OUTSIDE		11.6			
COUNTY HIGHWAY 29 SOUTHBOUND								
47+27.89	TO	48+67.29	OUTSIDE		11.6			
51+75.00	TO	53+13.27	OUTSIDE		11.5			
STAGE 1								
I-55 NORTHBOUND								
317+25.00	TO	320+00.00	INSIDE		4.7		28.9	275
320+00.00	TO	321+70.75	INSIDE		2.9		16.9	171
321+70.75	TO	322+08.94	INSIDE	8.5				
324+10.80	TO	324+80.43	INSIDE	15.6				
324+80.43	TO	326+00.00	INSIDE		2.0		12.5	120
326+00.00	TO	327+80.00	INSIDE		3.1		19.1	180
327+80.00	TO	329+06.00	INSIDE	23.0		80		126
I-55 SOUTHBOUND								
316+83.00	TO	318+10.00	INSIDE	23.2		80		127
318+10.00	TO	320+00.00	INSIDE		3.2		20.5	190
320+00.00	TO	321+09.08	INSIDE		1.9		11.7	109
321+09.08	TO	321+79.03	INSIDE	15.6				
323+80.56	TO	324+18.75	INSIDE	8.5				
324+18.75	TO	326+00.00	INSIDE		3.1		19.8	181
326+00.00	TO	328+56.00	INSIDE		4.3		27.6	256
STAGE 2								
I-55 NORTHBOUND								
321+70.75	TO	322+30.19	OUTSIDE	13.3				
324+31.99	TO	324+80.43	OUTSIDE	10.8				
I-55 SOUTHBOUND								
321+09.08	TO	321+57.83	OUTSIDE	10.9				
323+59.30	TO	324+18.75	OUTSIDE	13.3				
TOTAL				219	103	624	505	4039

GUARDRAIL

LOCATION				63000001	63100045	63100085	63100085	63100167	63200310	72501000	78200005
				STEEL PLATE BEAM GUARDRAIL, TYPE A , 6 FOOT POSTS	TRAFFIC BARRIER TERMINAL, TYPE 2	TRAFFIC BARRIER TERMINAL, TYPE 5	TRAFFIC BARRIER TERMINAL, TYPE 6	TRAFFIC BARRIER TERMINAL, TYPE 1(SPECIAL) TANGENT	GUARDRAIL REMOVAL	TERMINAL MARKER - DIRECT APPLIED	GUARDRAIL REFLECTORS, TYPE A
STATION	TO	STATION	INSIDE/OUTSIDE	FOOT	EACH	EACH	EACH	EACH	FOOT	EACH	EACH
I-55 NORTHBOUND											
321+59.10	TO	322+11.00	INSIDE	12.5			1		52		
321+67.19	TO	322+31.59	OUTSIDE	25			1		64		
I-55 SOUTHBOUND											
323+57.94	TO	324+22.34	OUTSIDE	25			1		64		
323+79.35		324+18.75	INSIDE				1		39		
COUNTY HIGHWAY 29 NORTHBOUND											
46+86.73	TO	48+25.00	OUTSIDE	112.5	1	1			138		2
51+33.33	TO	52+72.93	OUTSIDE	75			1	1	138	1	2
COUNTY HIGHWAY 29 SOUTHBOUND											
47+27.89	TO	48+67.29	OUTSIDE	75			1	1	139	1	2
51+75.00	TO	53+13.27	OUTSIDE	112.5	1	1			138		2
TOTAL				438	2	2	6	2	772	2	8

MEDIAN REMOVAL

LOCATION				44003100
STATION	TO	STATION	SIDE	SQ FT
COUNTY HIGHWAY 29				
44+30.57	TO	45+50.00	RT	448
54+40.80	TO	55+79.76	LT	533
TOTAL				981

MEDIAN

LOCATION				31101200	35400400	44003100	X6061702
				SUBBASE GRANULAR MATERIAL, TYPE B, 4"	PORTLAND CEMENT CONCRETE BASE COURSE WIDENING, 9"	MEDIAN REMOVAL	CONCRETE MEDIAN, TYPE SM (DOWELLED)
STATION	TO	STATION	SIDE	SQ YD	SQ YD	SQ FT	SQ FT
COUNTY HIGHWAY 29							
44+30.57	TO	45+50.00	RT	80	80	448	566
54+40.80	TO	55+79.76	LT	93	93	533	612
TOTAL				173	173	981	1179

COMBINATION CURB AND GUTTER REMOVAL

LOCATION				44000500
FROM STATION	OFFSET	TO STATION	OFFSET	FOOT
COUNTY HIGHWAY 29				
44+39.88	3.3' RT	45+50.00	3.4' RT	110
44+39.88	7.0' RT	45+50.00	8.8' RT	110
54+40.80	8.7' LT	55+61.48	7.3' LT	121
54+40.80	3.7' LT	55+61.48	3.5' LT	121
TOTAL				462

BENCHMARKS

PT NUMBER	NORTHING	EASTING	STATION	OFFSET	ELEVATION	DESCRIPTION
5121-1	1422646.239	826641.295	258+98.04	123.59	806.63	CHISLED SQUARE NE WING OF STR # 057-0162
5121-2	1422865.381	826504.769	259+73.67	-123.27	806.40	CHISLED SQUARE SW WING OF STR # 057-0162
5121-3	1426576.198	831632.36	324+31.01	78.83	765.01	CHISLED SQUARE NE WING OF STR # 057-0164
5121-4	1426616.496	831320.296	321+58.78	-78.96	765.37	CHISLED SQUARE SW WING OF STR # 057-0163

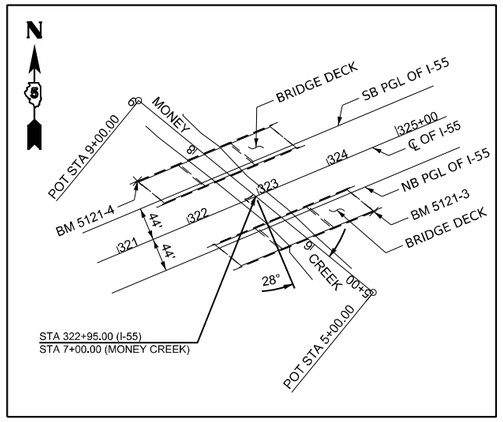

MONEY CREEK DETAIL

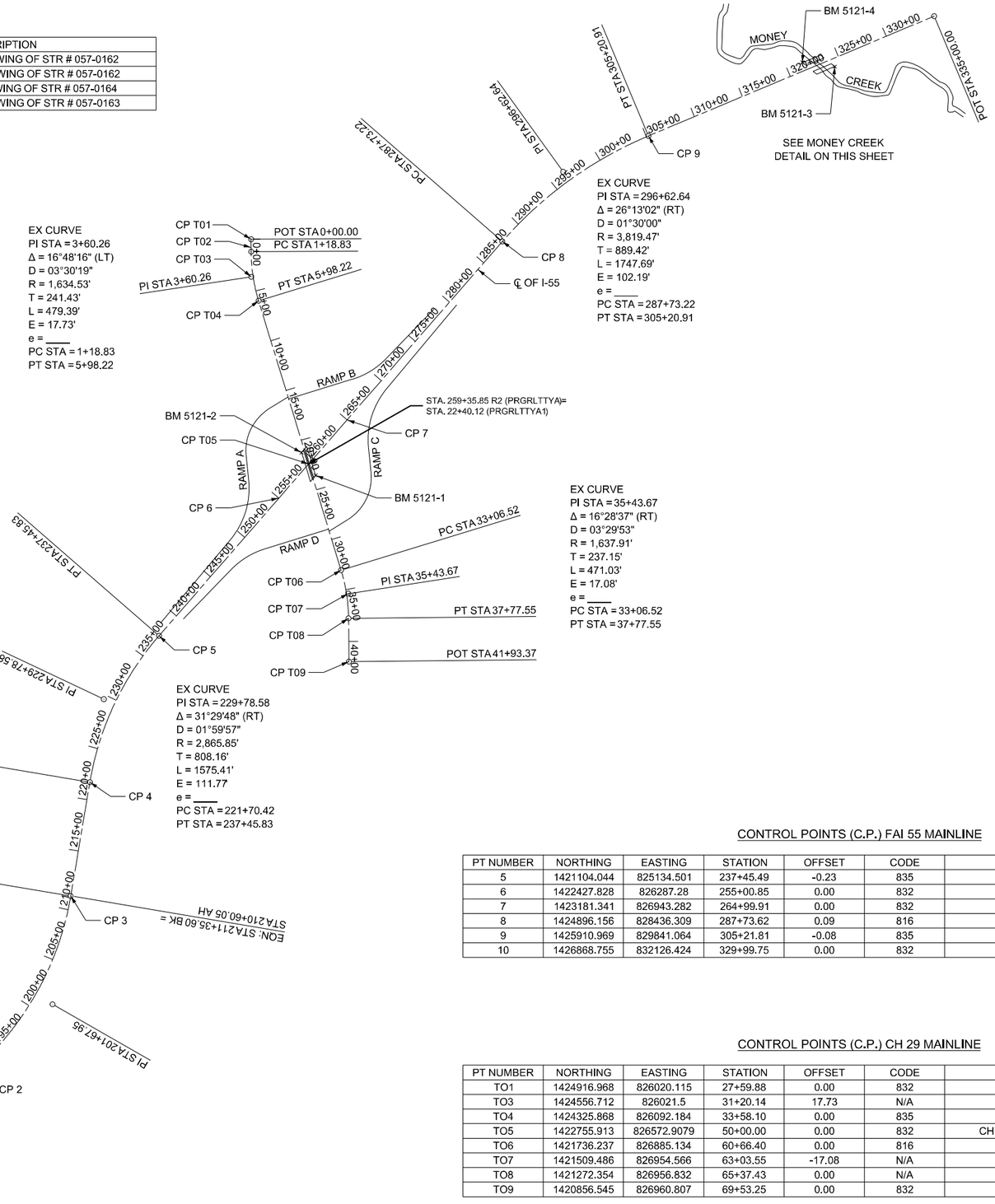

CONTROL POINTS (C.P.) FAI 55 MAINLINE

PT NUMBER	NORTHING	EASTING	STATION	OFFSET	CODE	DESCRIPTION
5	1421104.044	825134.501	237+45.49	-0.23	835	PT-DISK FOUND
6	1422427.828	826287.28	255+00.85	0.00	832	POT-DISK FOUND
7	1423181.341	826943.282	264+99.91	0.00	832	POT-DISK FOUND
8	1424896.156	828436.309	287+73.62	0.09	816	PC-DISK FOUND
9	1425910.969	829841.064	305+21.81	-0.08	835	PT-DISK FOUND
10	1426868.755	832126.424	329+99.75	0.00	832	POT-DISK FOUND

CONTROL POINTS (C.P.) CH 29 MAINLINE

PT NUMBER	NORTHING	EASTING	STATION	OFFSET	CODE	DESCRIPTION
TO1	1424916.968	826020.115	27+59.88	0.00	832	POT-MAG NAIL
TO3	1424556.712	826021.5	31+20.14	17.73	N/A	PI-MAG NAIL
TO4	1424325.868	826092.184	33+58.10	0.00	835	PT-DISK FOUND
TO5	1422755.913	826572.9079	50+00.00	0.00	832	CH 29 & I-55 INTERSECTION CHISLED "+" FOUND
TO6	1421736.237	826885.134	60+66.40	0.00	816	PC-DISK FOUND
TO7	1421509.486	826954.566	63+03.55	-17.08	N/A	PI-IP/CAP
TO8	1421272.354	826956.832	65+37.43	0.00	N/A	PT-DISK FOUND
TO9	1420856.545	826960.807	69+53.25	0.00	832	POT-MAG NAIL

MODEL: Overall-ATB [Sheet]
FILE NAME: S:\JOL\6300-6399\6346\125\Drawings\CAD\ORD-10.12\CADsheets\D570F37-sht-alt-1.dgn

STRAND ASSOCIATES®
1170 SOUTH HOUBOLT ROAD
JOLIET, ILLINOIS 60431
(815) 744-4200

USER NAME = jaker	DESIGNED - SRB	REVISED -	
	DRAWN - DJW	REVISED -	
	CHECKED - MAG	REVISED -	
PLOT DATE = 5/23/2025	DATE - 10/22/2025	REVISED -	

STATE OF ILLINOIS
DEPARTMENT OF TRANSPORTATION

ALIGNMENT TIES AND BENCHMARKS
FAI 55 AND CH 29

SCALE: | SHEET 1 OF 2 SHEETS | STA. | TO STA.

F.A.I RTE.	SECTION	COUNTY	TOTAL SHEETS	SHEET NO.
55	(57-3)BR	MCLEAN	126	14

CONTRACT NO. 70F37

ILLINOIS | FED. AID PROJECT

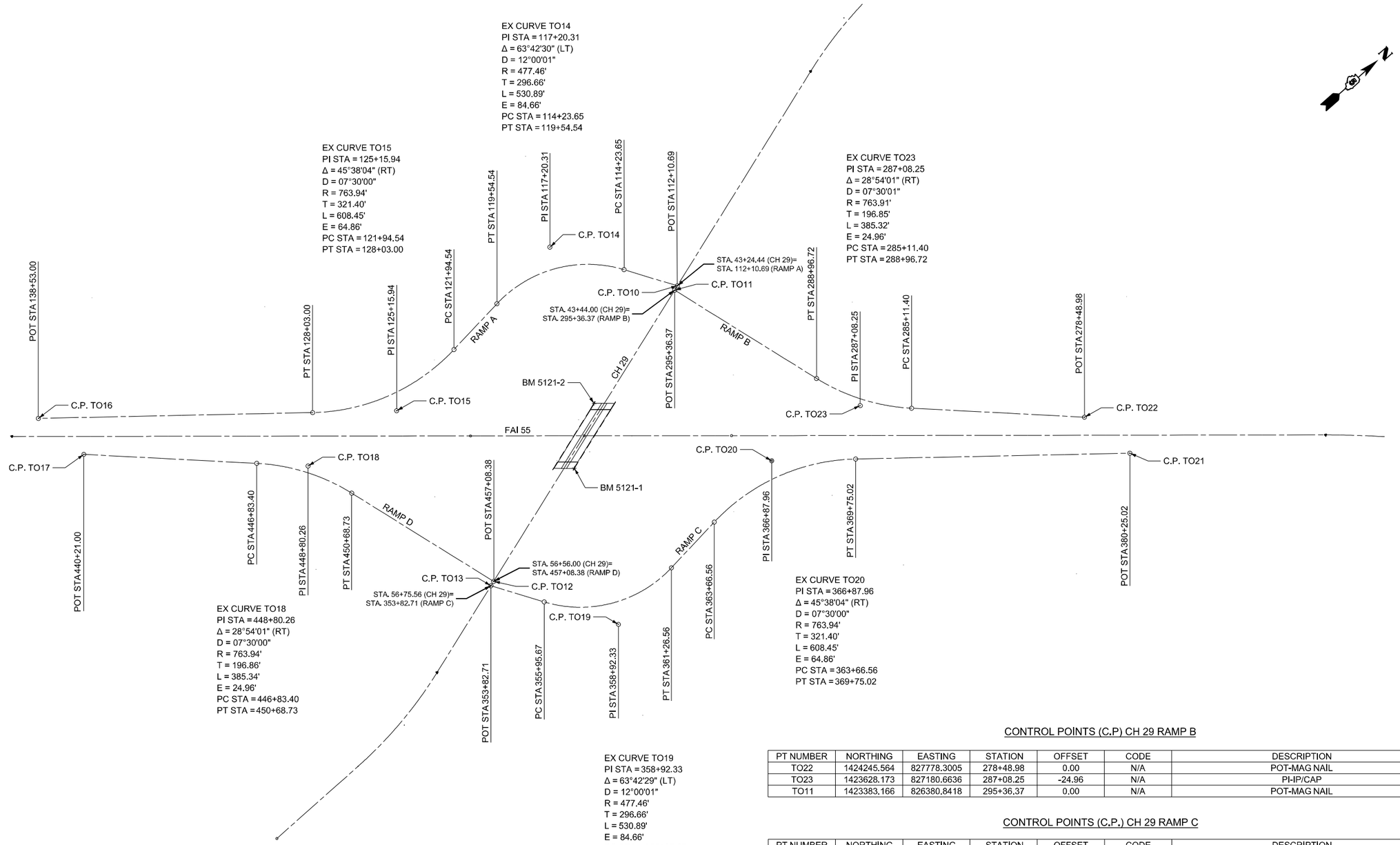

CONTROL POINTS (C.P.) CH 29 RAMP A

PT NUMBER	NORTHING	EASTING	STATION	OFFSET	CODE	DESCRIPTION
TO10	1423401.869	826375.115	112+10.69	0.00	N/A	POT-MAG NAIL
TO14	1423131.591	825943.0707	117+20.31	84.66	N/A	PI IP/CAP
TO15	1422277.83	826028.8525	125+15.94	-64.86	N/A	PI-IP/CAP
TO16	1421225.689	825149.2228	138+53.00	0.00	N/A	POT-MAG NAIL

CONTROL POINTS (C.P) CH 29 RAMP B

PT NUMBER	NORTHING	EASTING	STATION	OFFSET	CODE	DESCRIPTION
TO22	1424245.564	827778.3005	278+48.98	0.00	N/A	POT-MAG NAIL
TO23	1423628.173	827180.6636	287+08.25	-24.96	N/A	PI-IP/CAP
TO11	1423383.166	826380.8418	295+36.37	0.00	N/A	POT-MAG NAIL

CONTROL POINTS (C.P.) CH 29 RAMP C

PT NUMBER	NORTHING	EASTING	STATION	OFFSET	CODE	DESCRIPTION
TO13	1422109.957	826770.7008	353+82.71	0.00	N/A	POT-MAG NAIL
TO19	1422380.237	827202.7475	358+92.33	84.66	N/A	PI-IP/CAP
TO20	1423233.999	827116.9657	366+87.97	-64.86	N/A	PI-IP/CAP
TO21	1424286.14	827996.5955	380+25.02	0.00	N/A	POT-MAG NAIL

CONTROL POINTS (C.P.) CH 29 RAMP D

PT NUMBER	NORTHING	EASTING	STATION	OFFSET	CODE	DESCRIPTION
TO17	1421266.272	825367.5244	440+21.00	0.00	N/A	POT-MAG NAIL
TO18	1421883.656	825965.1547	448+80.26	-24.96	N/A	PI-IP/CAP
TO12	1422128.66	826764.9739	457+08.38	0.00	N/A	POT-MAG NAIL

MODEL: RAMPS - Plan 2 [Sheet]
FILE NAME: S:\JOL\6300-639\6346\125\Drawings\CAD\ORD-10.12\CADsheets\D5\70F37-sht-alb-2.dgn

STRAND ASSOCIATES®
1170 SOUTH HOUBOLT ROAD
JOLIET, ILLINOIS 60431
(815) 744-4200

USER NAME = jaker	DESIGNED - SRB	REVISED -	
	DRAWN - DJW	REVISED -	
	CHECKED - MAG	REVISED -	
PLOT DATE = 5/23/2025	DATE - 10/22/2025	REVISED -	

STATE OF ILLINOIS
DEPARTMENT OF TRANSPORTATION

ALIGNMENT TIES AND BENCHMARKS
CH 29 RAMPS

SCALE: 1"=200' | SHEET 2 OF 2 SHEETS | STA. 230+00.00 TO STA. 290+00.00

F.A.I RTE.	SECTION	COUNTY	TOTAL SHEETS	SHEET NO.
55	(57-3)BR	MCLEAN	126	15

CONTRACT NO. 70F37

ILLINOIS | FED. AID PROJECT

EXISTING I-55 TYPICAL SECTION

STATION	TO	STATION
316+01.00		318+10.00
327+80.00		329+89.00

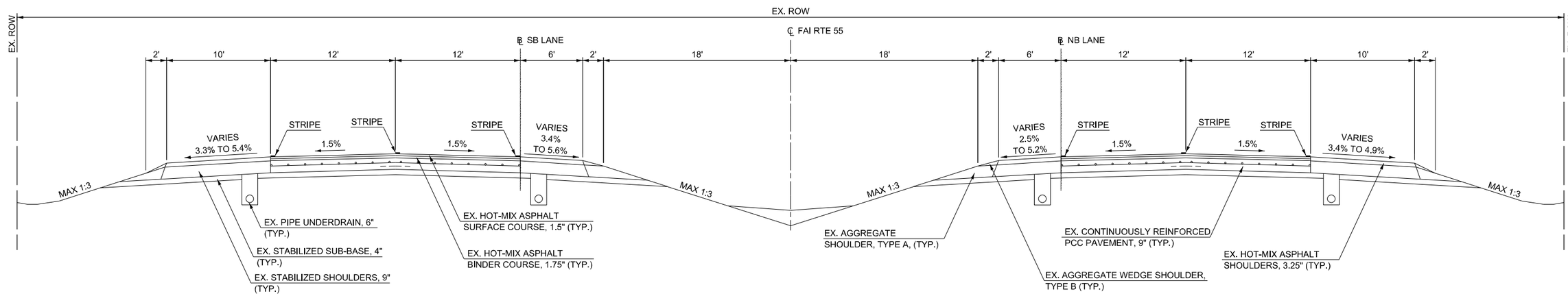

LEGEND

PAVED SHOULDER REMOVAL (SEE NOTE 1)

PROPOSED I-55 TYPICAL SECTION

STATION	TO	STATION
316+01.00 LT		318+10.00 LT
327+80.00 RT		329+89.00 RT

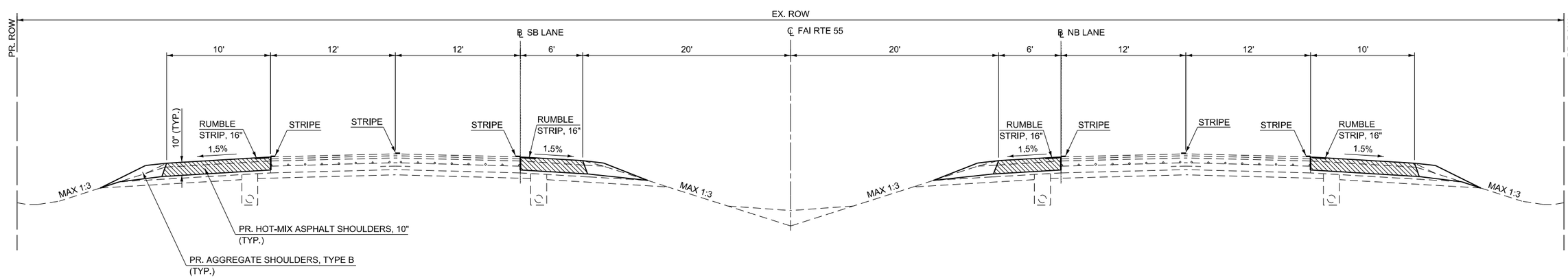

NOTES

1. SEE SHEETS 26 - 28 FOR ADDITIONAL REMOVAL DETAILS
2. SEE SHEETS 20 - 22 FOR ADDITIONAL INSTALLATION DETAILS
3. SEE SHEETS 53 - 58 FOR STRIPING DETAILS

MODEL: I-55 Over Money Creek (Northbound - North Side) - Copy-1 - Copy-1 [Sheet]
FILE NAME: S:\JOL\6300-639\6346\125\Drawings\CAD\ORD-10.12\CADsheets\D57\0F37-sht-typicals.dgn

STRAND ASSOCIATES®
1170 SOUTH HOUBOLT ROAD
JOLIET, ILLINOIS 60431
(815) 744-4200

USER NAME = jaker	DESIGNED - SRB	REVISED -	
	DRAWN - JMR	REVISED -	
	CHECKED - MAG	REVISED -	
PLOT DATE = 10/3/2025	DATE - 10/22/2025	REVISED -	

STATE OF ILLINOIS
DEPARTMENT OF TRANSPORTATION

CROSS SECTION TYPICALS
I-55

SCALE: SHEET 1 OF 4 SHEETS STA. TO STA.

F.A.I. RTE.	SECTION	COUNTY	TOTAL SHEETS	SHEET NO.
55	(57-3)BR	MCLEAN	126	16
		CONTRACT NO. 70F37		
		ILLINOIS	FED. AID PROJECT	

EXISTING I-55 TYPICAL SECTION

STATION	TO	STATION
316+47.00 RT		321+70.75 RT
324+80.43 RT		327+80.00 RT
318+10.00 LT		321+09.08 LT
324+18.75 LT		329+38.00 LT

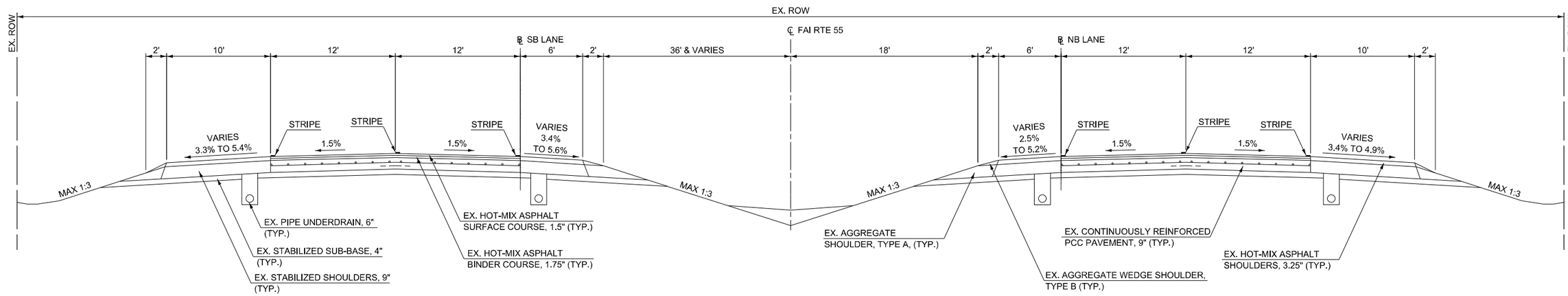

LEGEND

HOT-MIX ASPHALT SURFACE REMOVAL, 3" (SEE NOTE 1)

PROPOSED I-55 TYPICAL SECTION

STATION	TO	STATION
316+47.00 RT		321+70.75 RT
324+80.43 RT		327+80.00 RT
318+10.00 LT		321+09.08 LT
324+18.75 LT		329+38.00 LT

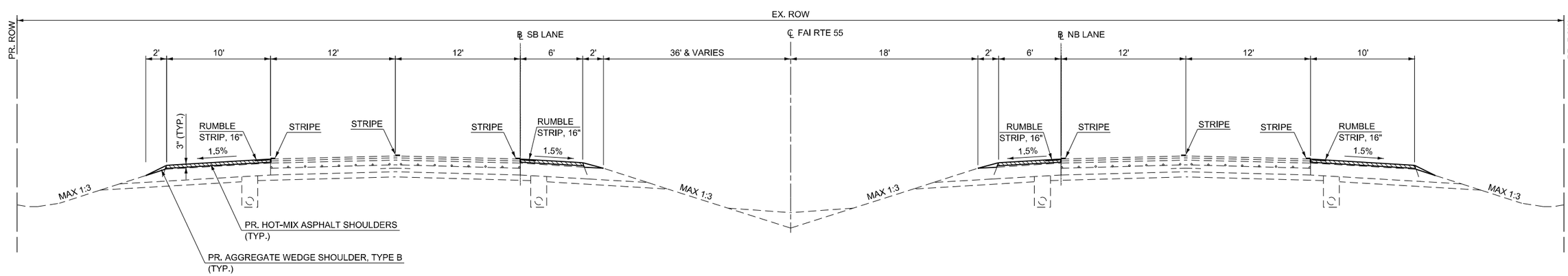

NOTES

1. SEE SHEETS 26 - 28 FOR ADDITIONAL REMOVAL DETAILS
2. SEE SHEETS 20 - 22 FOR ADDITIONAL INSTALLATION DETAILS
3. SEE SHEETS 53 - 58 FOR STRIPING DETAILS

MODEL: I-55 Over Money Creek (Northbound - North Side) - Copy-2 [Sheet]
FILE NAME: S:\JOL\6300-639963461125\Drawings\CAD\ORD-10.12\CADsheets\D570F37-sht-typicals.dgn

STRAND ASSOCIATES®
1170 SOUTH HOUBOLT ROAD
JOLIET, ILLINOIS 60431
(815) 744-4200

USER NAME = jaker	DESIGNED - SRB	REVISED -	
	DRAWN - JMR	REVISED -	
	CHECKED - MAG	REVISED -	
PLOT DATE = 10/3/2025	DATE - 10/22/2025	REVISED -	

STATE OF ILLINOIS
DEPARTMENT OF TRANSPORTATION

CROSS SECTION TYPICALS
I-55

SCALE: SHEET 2 OF 4 SHEETS STA. TO STA.

F.A.I RTE.	SECTION	COUNTY	TOTAL SHEETS	SHEET NO.
55	(57-3)BR	MCLEAN	126	17
		CONTRACT NO. 70F37		
		ILLINOIS	FED. AID PROJECT	

EXISTING I-55 TYPICAL SECTION

STATION	TO	STATION
321+13.08		324+76.43

BRIDGE OMISSION STA. 321+69.58 LT TO STA. 323+60.85 LT AND
STA. 322+29.14 RT TO STA. 324+20.42 RT

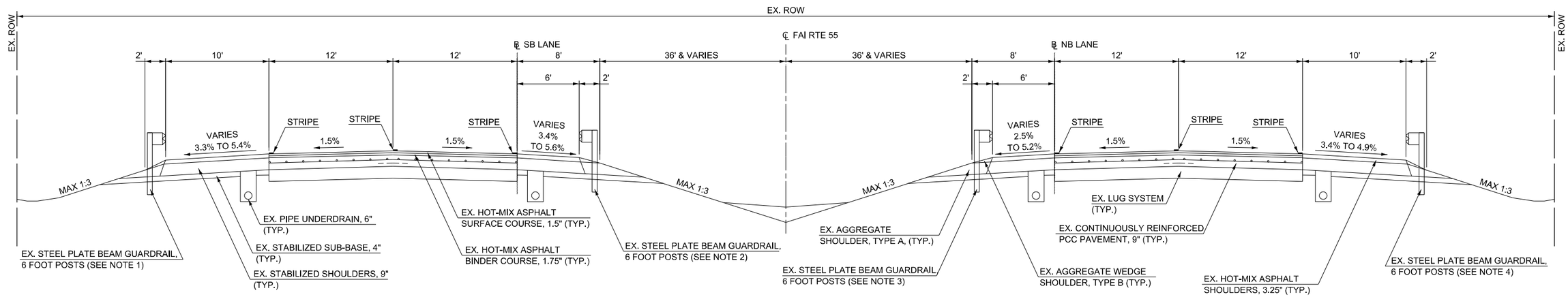

NOTES

1. STA. 323+47.66 TO STA. 324+80.62
2. STA. 323+68.95 TO STA. 324+80.62
3. STA. 318+56.70 TO STA. 321+09.27
4. STA. 319+40.13 TO STA. 321+09.27

LEGEND

- PAVED SHOULDER REMOVAL (SEE NOTE 2)
- PAVEMENT REMOVAL (SEE NOTE 2)
- LUG SYSTEM REMOVAL (SEE NOTE 2)
- GUARDRAIL REMOVAL (SEE NOTE 2)

PROPOSED I-55 TYPICAL SECTION

STATION	TO	STATION
321+09.08 LT		324+18.75 LT
324+80.43 RT		324+80.43 RT

BRIDGE OMISSION STA. 321+69.58 LT TO STA. 323+60.85 LT AND
STA. 322+29.14 RT TO STA. 324+20.42 RT

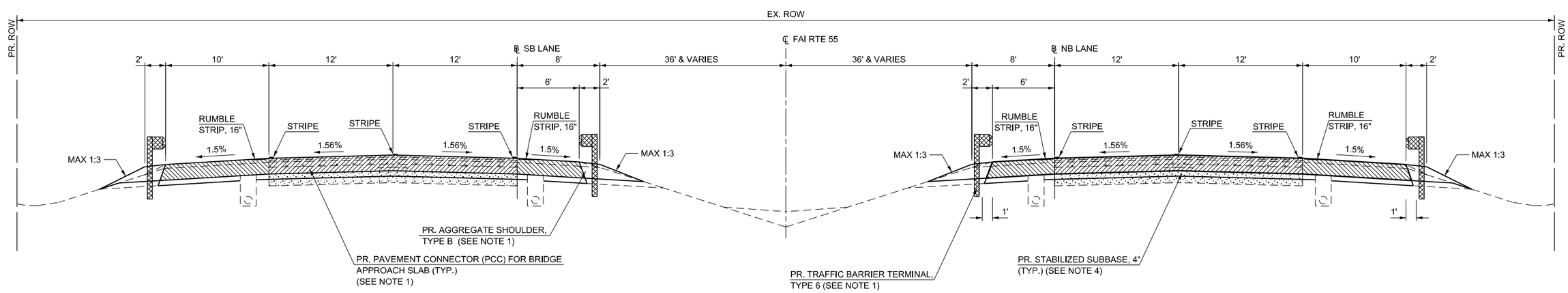

NOTES

1. SEE SHEET 27 FOR INSTALLATION LIMITS.
2. SEE SHEET 21 FOR REMOVAL LIMITS.
3. SEE SHEETS 53 - 58 FOR STRIPING DETAILS.
4. STABILIZED SUBBASE - HOT-MIX ASPHALT, 4" TO BE INSTALLED BENEATH PAVEMENT CONNECTOR (PCC) FOR BRIDGE APPROACH SLAB PER STANDARD 420401.

MODEL: TYP - I-55 Over Money Creek [Sheet]
FILE NAME: S:\JOL\6300-639\6346125\Drawings\CAD\ORD-10.12\CADsheets\D5\70F37-sht-typicals.dgn

STRAND ASSOCIATES®
1170 SOUTH HOUBOLT ROAD
JOLIET, ILLINOIS 60431
(815) 744-4200

USER NAME = StevenB	DESIGNED - SRB	REVISED -	
	DRAWN - JMR	REVISED -	
	CHECKED - MAG	REVISED -	
PLOT DATE = 10/3/2025	DATE - 10/22/2025	REVISED -	

STATE OF ILLINOIS
DEPARTMENT OF TRANSPORTATION

CROSS SECTION TYPICALS
I-55 AT MONEY CREEK

SCALE: SHEET 3 OF 4 SHEETS STA. TO STA.

F.A.I RTE.	SECTION	COUNTY	TOTAL SHEETS	SHEET NO.
55	(57-3)BR	MCLEAN	126	18

CONTRACT NO. 70F37

ILLINOIS | FED. AID PROJECT

NOTES

1. STA. 47+87.44 TO STA. 48+35.52 AND STA. 51+24.57 TO STA. 51+70.83
2. STA. 48+29.80 TO STA. 48+75.82 AND STA. 51+64.67 TO STA. 52+12.57
3. NORTHBOUND I-55 LEFT TURN LANE SHOWN, REVERSE FOR SOUTHBOUND I-55 LEFT TURN LANE.

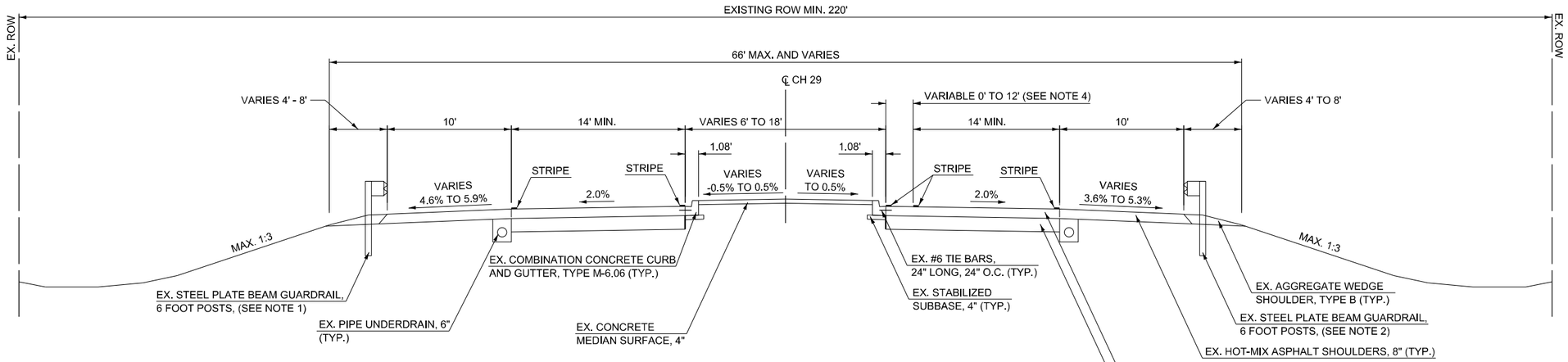

EXISTING COUNTY HIGHWAY 29 TYPICAL SECTION

STATION	TO	STATION
38+35.71		61+63.87

BRIDGE OMISSION STA. 48+53.27 TO STA. 51+47.02

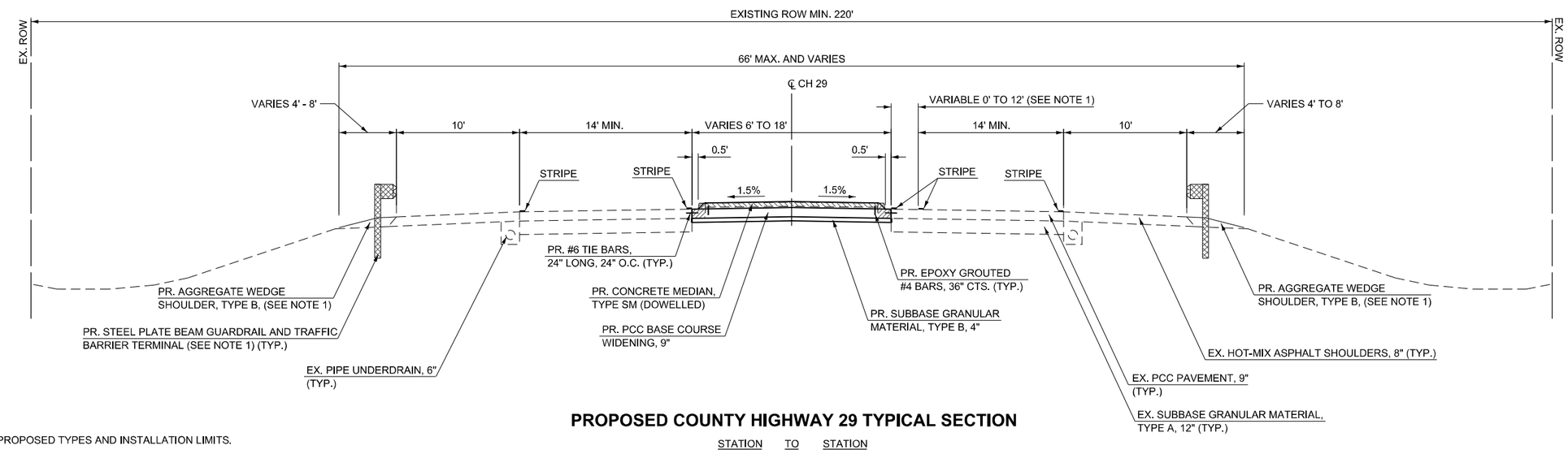

PROPOSED COUNTY HIGHWAY 29 TYPICAL SECTION

STATION	TO	STATION
38+35.71		61+63.87

BRIDGE OMISSION STA. 48+53.27 TO STA. 51+47.02

NOTES

1. SEE SHEETS 28-30 FOR PROPOSED TYPES AND INSTALLATION LIMITS.
2. NORTHBOUND I-55 LEFT TURN LANE SHOWN, REVERSE FOR SOUTHBOUND I-55 LEFT TURN LANE.
3. SEE SHEETS 21-23 FOR REMOVAL LIMITS.
4. SEE SHEETS 31 & 32 FOR ADDITIONAL INSTALLATION MEDIAN DETAILS.
5. EXCAVATION FOR PCC BASE COURSE WIDENING, 8" AND SUBBASE GRANULAR MATERIAL, TYPE B, 4" TO BE PAID FOR AS EARTH EXCAVATION

LEGEND

- MEDIAN REMOVAL (SEE NOTE 3)
- COMBINATION CURB & GUTTER REMOVAL (SEE NOTE 3)
- GUARDRAIL REMOVAL (SEE NOTE 3)

NOTES

1. SEE SHEET 17 FOR ADDITIONAL ROADWAY REMOVAL DETAILS.

LEGEND

- APPROACH SLAB REMOVAL
- S.N. 057-0163 & 057-0164
- HOT-MIX ASPHALT SURFACE REMOVAL, 3"
- PAVEMENT REMOVAL
  LUG SYSTEM REMOVAL
- PAVED SHOULDER REMOVAL
- GUARDRAIL REMOVAL

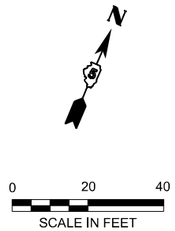

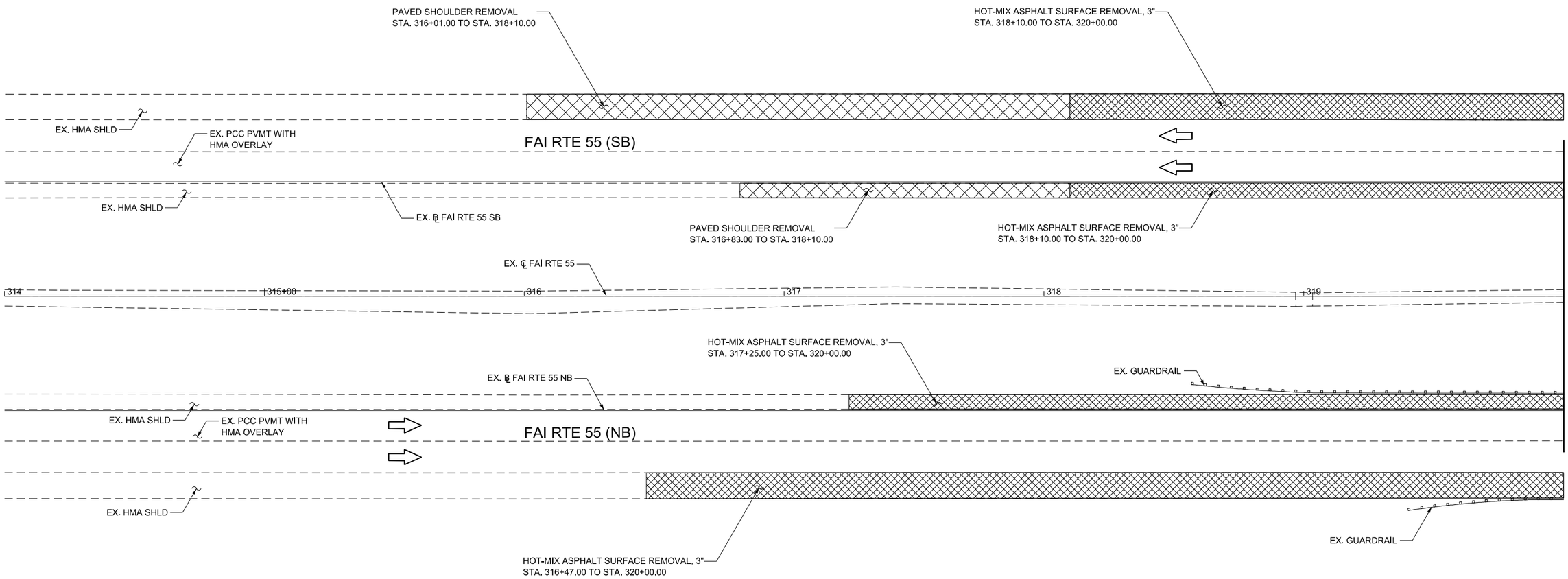

MODEL: I55_ALL-3 - Plan 4 [Sheet]
FILE NAME: S:\JOL\6300-6399\6346\125\Drawings\CAD\ORD-10.12\CADsheets\d570F37-sht-ctwy-removal-I55.dgn

STRAND ASSOCIATES®
1170 SOUTH HOUBOLT ROAD
JOLIET, ILLINOIS 60431
(815) 744-4200

USER NAME = JohnN	DESIGNED - SRB	REVISED -	
	DRAWN - JMR	REVISED -	
	CHECKED - MAG	REVISED -	
PLOT DATE = 10/2/2025	DATE - 10/22/2025	REVISED -	

STATE OF ILLINOIS
DEPARTMENT OF TRANSPORTATION

I-55 OVER MONEY CREEK
ROADWAY REMOVAL

SCALE: 1"=20' | SHEET 1 OF 3 SHEETS | STA. 314+00.00 TO STA. 320+00.00

F.A.I RTE.	SECTION	COUNTY	TOTAL SHEETS	SHEET NO.
55	(57-3)BR	MCLEAN	126	20

CONTRACT NO. 70F37

ILLINOIS | FED. AID PROJECT

NOTES

1. SEE SHEETS 17 - 18 FOR ADDITIONAL ROADWAY REMOVAL DETAILS.
2. SEE SHEETS 82 - 112 FOR S.N. 057-0163 & 0164 REMOVAL DETAILS.
3. AREA TO BE RESURFACED PRIOR TO PLACING TRAFFIC ON THE SHOULDERS DURING STAGE 1. QUANTITIES FOR HOT-MIX ASPHALT SURFACE REMOVAL, 3", SHOULDER RUMBLE STRIPS, 16 INCH, AND AGGREGATE WEDGE SHOULDER, TYPE B ARE INCLUDED IN THE CONTRACT FOR THIS WORK. REFER TO SHOULDERS SCHEDULE FOR ADDITIONAL INFORMATION.

LEGEND

- APPROACH SLAB REMOVAL
- S.N. 057-0163 & 057-0164
- HOT-MIX ASPHALT SURFACE REMOVAL, 3"
- PAVEMENT REMOVAL LUG SYSTEM REMOVAL
- PAVED SHOULDER REMOVAL
- GUARDRAIL REMOVAL

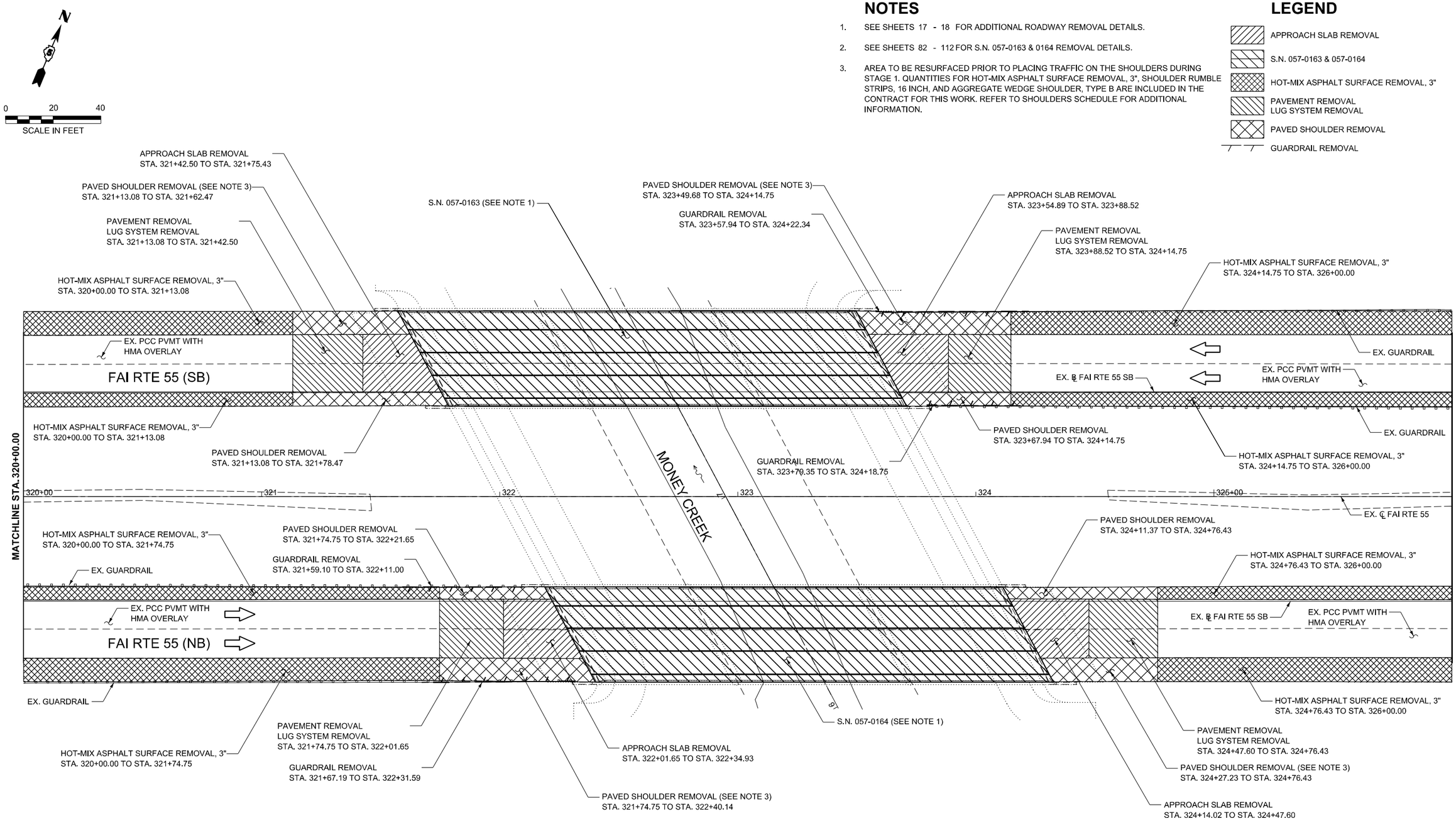

MODEL: I55_ALL-3 - Plan 5 [Sheet]
FILE NAME: S:\JOL\6300-6399\6346\125\Drawings\CAD\ORD-10.12\CADsheets\d570F37-sht-rdwy-removal-I55.dgn

STRAND ASSOCIATES®
1170 SOUTH HOUBOLT ROAD
JOLIET, ILLINOIS 60431
(815) 744-4200

USER NAME = JohnN	DESIGNED - SRB	REVISED -	
	DRAWN - JMR	REVISED -	
	CHECKED - MAG	REVISED -	
PLOT DATE = 10/2/2025	DATE - 10/22/2025	REVISED -	

STATE OF ILLINOIS
DEPARTMENT OF TRANSPORTATION

I-55 OVER MONEY CREEK
ROADWAY REMOVAL

SCALE: 1"=20' | SHEET 2 OF 3 SHEETS | STA. 320+00.00 TO STA. 326+00.00

F.A.I RTE.	SECTION	COUNTY	TOTAL SHEETS	SHEET NO.
55	(57-3)BR	MCLEAN	126	21

CONTRACT NO. 70F37

ILLINOIS | FED. AID PROJECT

NOTES

1. SEE SHEET 17 FOR ADDITIONAL ROADWAY REMOVAL DETAILS.

LEGEND

- APPROACH SLAB REMOVAL
- S.N. 057-0163 & 057-0164
- HOT-MIX ASPHALT SURFACE REMOVAL, 3"
- PAVEMENT REMOVAL
  LUG SYSTEM REMOVAL
- PAVED SHOULDER REMOVAL
- GUARDRAIL REMOVAL

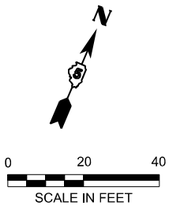

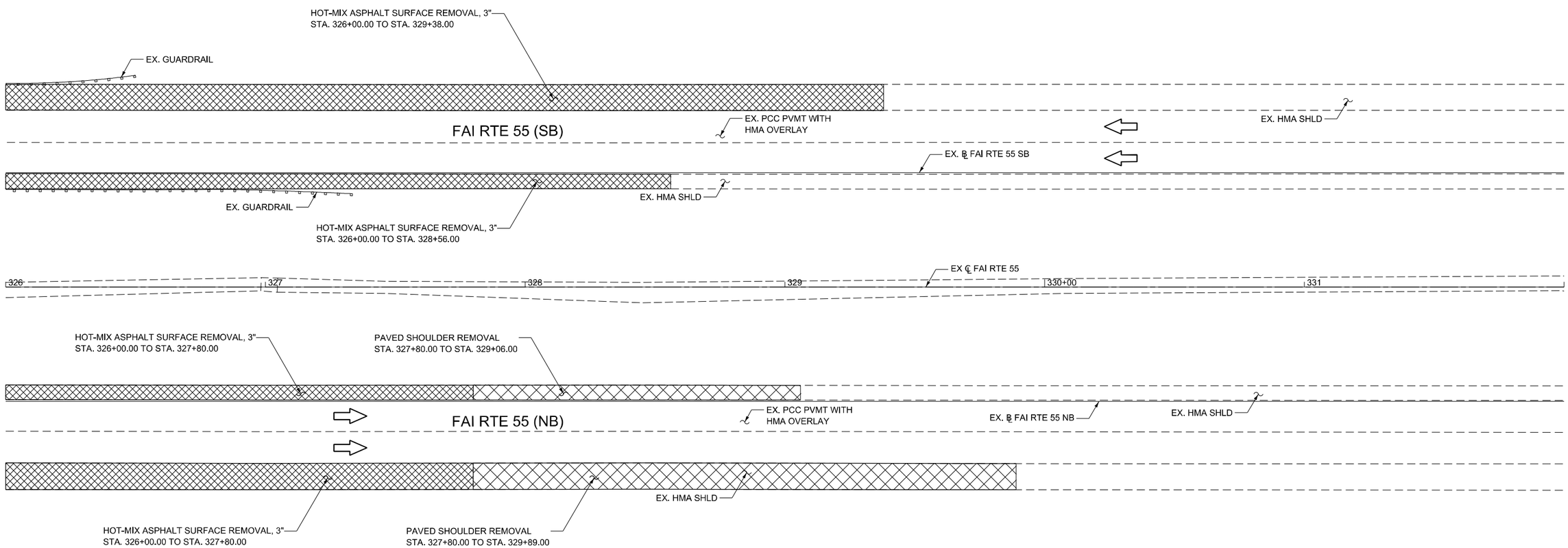

MODEL: I55_ALL-3 - Plan 6 [Sheet]
FILE NAME: S:\JOL\6300--6399\6346\125\Drawings\CAD\ORD-10.12\CADsheets\d570F37-sht-dwy-removal-I55.dgn

STRAND ASSOCIATES®
1170 SOUTH HOUBOLT ROAD
JOLIET, ILLINOIS 60431
(815) 744-4200

USER NAME = JohnN	DESIGNED - SRB	REVISED -	
	DRAWN - JMR	REVISED -	
	CHECKED - MAG	REVISED -	
PLOT DATE = 10/2/2025	DATE - 10/22/2025	REVISED -	

STATE OF ILLINOIS
DEPARTMENT OF TRANSPORTATION

I-55 OVER MONEY CREEK
ROADWAY REMOVAL

SCALE: 1"=20' | SHEET 3 OF 3 SHEETS | STA. 326+00.00 TO STA. 332+00.00

F.A.I RTE.	SECTION	COUNTY	TOTAL SHEETS	SHEET NO.
55	(57-3)BR	MCLEAN	126	22
		CONTRACT NO. 70F37		
		ILLINOIS FED. AID PROJECT		

LEGEND

- CONCRETE MEDIAN SURFACE REMOVAL
- AGGREGATE SHOULDER REMOVAL
- S.N. 057-0162
- LINEAR REMOVAL ITEMS (AS NOTED)

NOTES

1. SEE SHEET 19 FOR ADDITIONAL ROADWAY REMOVAL DETAILS.

0 20 40
SCALE IN FEET

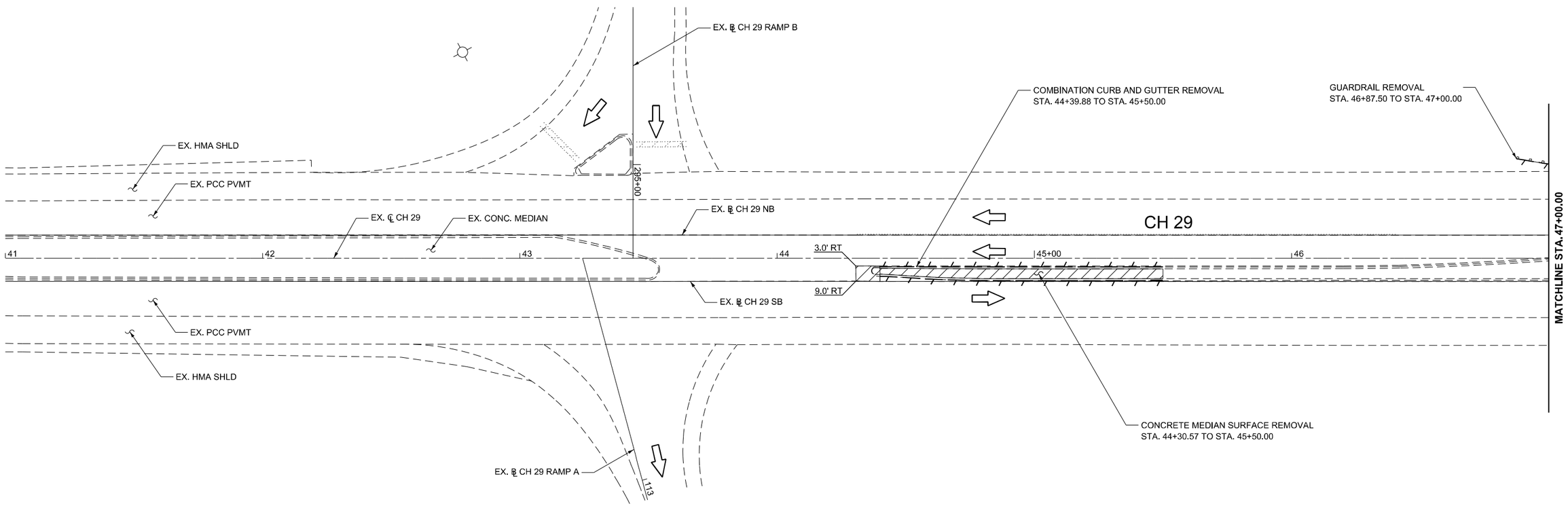

MODEL: TOWANDA-3 - Plan 1 [Sheet]
FILE NAME: S:\JOL\6300--6399\6346\125\Drawings\CAD\ORD-10.12\CADsheets\D570F37-sht-rdwy-removal-ch29.dgn

STRAND ASSOCIATES®
1170 SOUTH HOUBOLT ROAD
JOLIET, ILLINOIS 60431
(815) 744-4200

USER NAME = jorgel	DESIGNED - SRB	REVISED -	
	DRAWN - JMR	REVISED -	
	CHECKED - MAG	REVISED -	
PLOT DATE = 10/2/2025	DATE - 10/22/2025	REVISED -	

STATE OF ILLINOIS
DEPARTMENT OF TRANSPORTATION

COUNTY HIGHWAY 29 OVER I-55
ROADWAY REMOVAL

SCALE: 1"=20' | SHEET 1 OF 3 SHEETS | STA. 41+00.00 TO STA. 47+00.00

F.A.I RTE.	SECTION	COUNTY	TOTAL SHEETS	SHEET NO.
55	(57-3)BR	MCLEAN	126	23

CONTRACT NO. 70F37
ILLINOIS | FED. AID PROJECT

LEGEND

- CONCRETE MEDIAN SURFACE REMOVAL
- AGGREGATE SHOULDER REMOVAL
- S.N. 057-0162 (SEE NOTE 2)
- LINEAR REMOVAL ITEMS (AS NOTED)

NOTES

1. SEE SHEET 19 FOR ADDITIONAL ROADWAY REMOVAL DETAILS.
2. SEE SHEETS 63 - 81 FOR S.N. 057-0162 REMOVAL DETAILS.

N

0 20 40
SCALE IN FEET

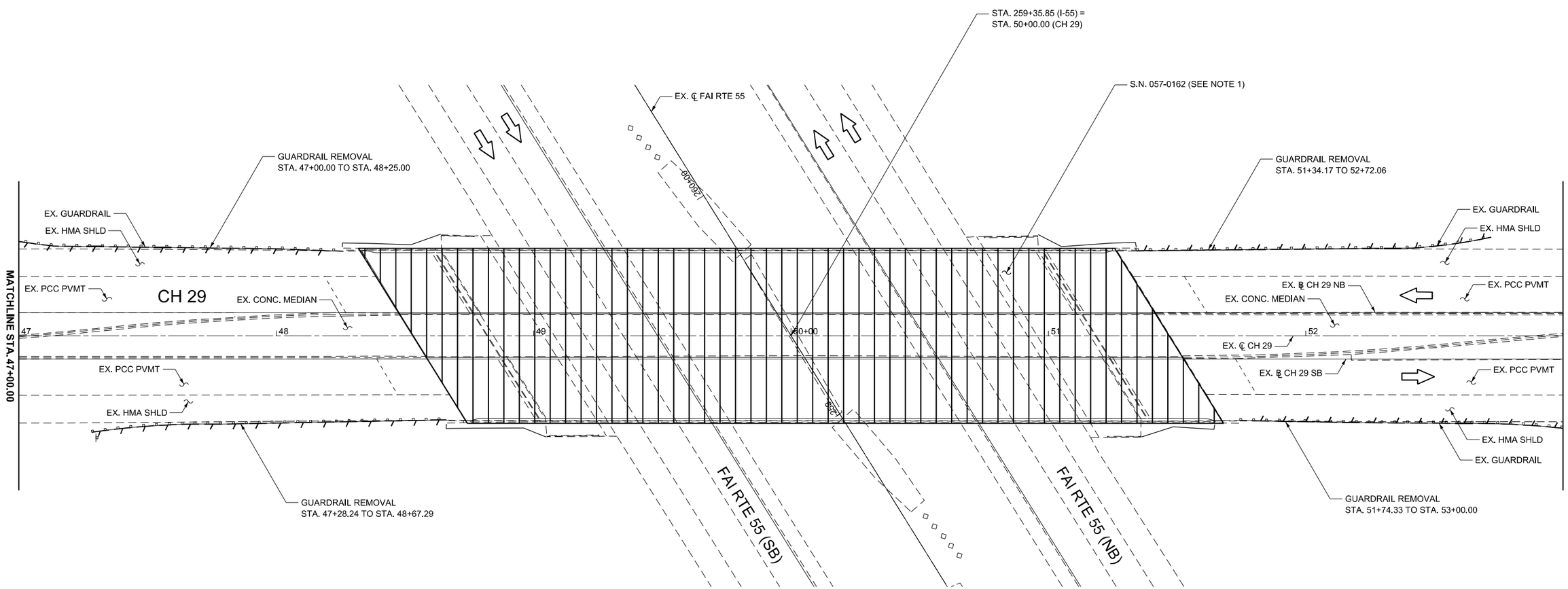

MODEL: ####
FILE NAME: S:\JOL\6300--6399\6346\125\Drawings\CAD\ORD-10.12\CADsheets\D570F37-sht-rdwy-removal-ch29.dgn

STRAND ASSOCIATES®
1170 SOUTH HOUBOLT ROAD
JOLIET, ILLINOIS 60431
(815) 744-4200

USER NAME = jorgel	DESIGNED - SRB	REVISED -	
	DRAWN - JMR	REVISED -	
	CHECKED - MAG	REVISED -	
PLOT DATE = 10/2/2025	DATE - 10/22/2025	REVISED -	

STATE OF ILLINOIS
DEPARTMENT OF TRANSPORTATION

COUNTY HIGHWAY 29 OVER I-55
ROADWAY REMOVAL

SCALE: 1"=20' | SHEET 2 OF 3 SHEETS | STA. 47+00.00 TO STA. 53+00.00

F.A.I RTE.	SECTION	COUNTY	TOTAL SHEETS	SHEET NO.
55	(57-3)BR	MCLEAN	126	24
		CONTRACT NO. 70F37		
		ILLINOIS	FED. AID PROJECT	

LEGEND

- CONCRETE MEDIAN SURFACE REMOVAL
- AGGREGATE SHOULDER REMOVAL
- S.N. 057-0162
- LINEAR REMOVAL ITEMS (AS NOTED)

NOTES

1. SEE SHEET 19 FOR ADDITIONAL ROADWAY REMOVAL DETAILS.

0 20 40
SCALE IN FEET

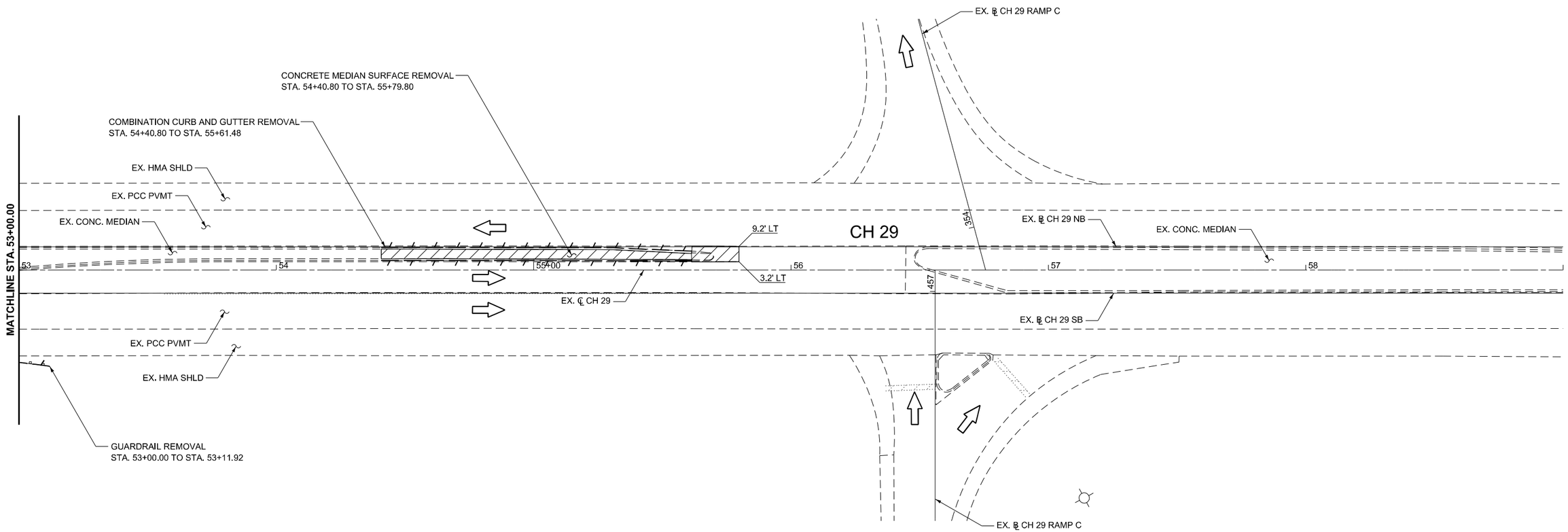

MODEL: TOWANDA-3 - Plan 3 [Sheet]
FILE NAME: S:\JOL\6300--6399\6346\125\Drawings\CAD\ORD-10.12\CADsheets\D570F37-sht-rdwy-removal-ch29.dgn

STRAND ASSOCIATES®
1170 SOUTH HOUBOLT ROAD
JOLIET, ILLINOIS 60431
(815) 744-4200

USER NAME = jorgel	DESIGNED - SRB	REVISED -	
	DRAWN - JMR	REVISED -	
	CHECKED - MAG	REVISED -	
PLOT DATE = 10/2/2025	DATE - 10/22/2025	REVISED -	

STATE OF ILLINOIS
DEPARTMENT OF TRANSPORTATION

COUNTY HIGHWAY 29 OVER I-55
ROADWAY REMOVAL

SCALE: 1"=20' | SHEET 3 OF 3 SHEETS | STA. 53+00.00 TO STA. 59+00.00

F.A.I RTE.	SECTION	COUNTY	TOTAL SHEETS	SHEET NO.
55	(57-3)BR	MCLEAN	126	25

CONTRACT NO. 70F37

ILLINOIS | FED. AID PROJECT

NOTES

1. SEE SHEET 17 FOR ADDITIONAL ROADWAY DETAILS.

LEGEND

- S.N. 057-0163 & 057-0164 (SEE NOTE 1)
- PR. HOT-MIX ASPHALT SHOULDERS
- PR. HOT-MIX ASPHALT SHOULDERS, 10"
- PR. PAVEMENT CONNECTOR (PCC) FOR BRIDGE APPROACH SLAB
- PR. CLASS D PATCHES, TYPE III, 13"
- PR. TRAFFIC BARRIER TERMINAL, TYPE 6 / STEEL PLATE BEAM GUARDRAIL, TYPE A, 6 FOOT POSTS (AS NOTED)

0 20 40
SCALE IN FEET

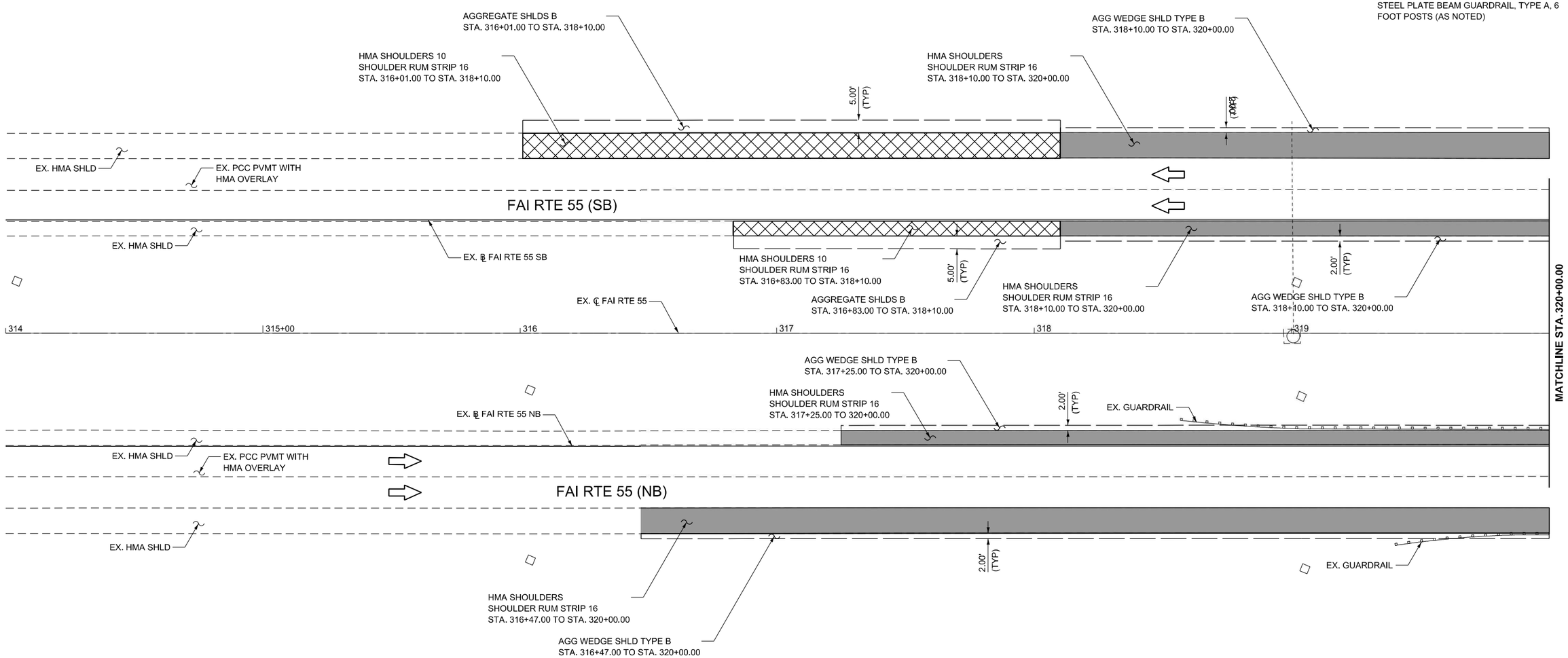

MODEL: I55_ALL-3 - Plan 4 [Sheet]
FILE NAME: S:\JOL\6300--6399\6346\125\Drawings\CAD\ORD-10.12\CADsheets\d570F37-sht-rdwy-i55.dgn

STRAND ASSOCIATES®
1170 SOUTH HOUBOLT ROAD
JOLIET, ILLINOIS 60431
(815) 744-4200

USER NAME = jorgel	DESIGNED - SRB	REVISED -	
	DRAWN - JMR	REVISED -	
	CHECKED - MAG	REVISED -	
PLOT DATE = 10/3/2025	DATE - 10/22/2025	REVISED -	

STATE OF ILLINOIS
DEPARTMENT OF TRANSPORTATION

I-55 OVER MONEY CREEK
ROADWAY PLAN

SCALE: 1"=20' | SHEET 1 OF 3 SHEETS | STA. 314+00.00 TO STA. 320+00.00

F.A.I RTE.	SECTION	COUNTY	TOTAL SHEETS	SHEET NO.
55	(57-3)BR	MCLEAN	126	26

CONTRACT NO. 70F37

ILLINOIS | FED. AID PROJECT

NOTES

1. SEE SHEETS 17 - 18 FOR ADDITIONAL ROADWAY DETAILS.
2. SEE SHEETS 82 - 112 FOR S.N. 057-0163 & 0164 INSTALLATION DETAILS.

LEGEND

- S.N. 057-0163 & 057-0164 (SEE NOTE 1)
- PR. HOT-MIX ASPHALT SHOULDERS
- PR. HOT-MIX ASPHALT SHOULDERS, 10"
- PR. PAVEMENT CONNECTOR (PCC) FOR BRIDGE APPROACH SLAB
- PR. CLASS D PATCHES, TYPE III, 13"
- PR. TRAFFIC BARRIER TERMINAL, TYPE 6 / STEEL PLATE BEAM GUARDRAIL, TYPE A, 6 FOOT POSTS (AS NOTED)

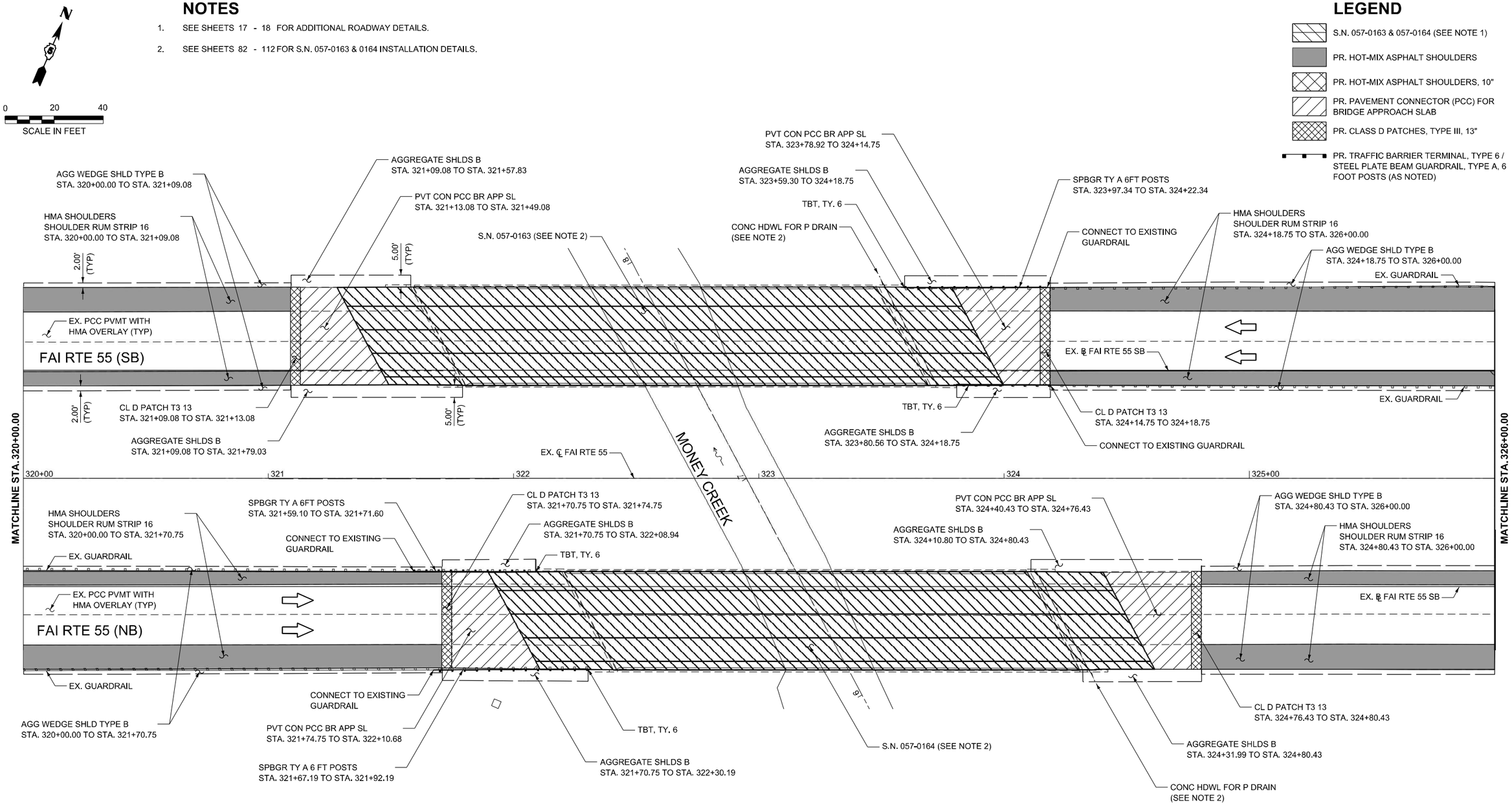

MODEL: I55_ALL-3 - Plan 5 [Sheet]
FILE NAME: S:\JOL\6300-6399\6346\125\Drawings\CAD\ORD-10.12\CADsheets\d570F37-sht-rdwy-I55.dgn

STRAND ASSOCIATES®
1170 SOUTH HOUBOLT ROAD
JOLIET, ILLINOIS 60431
(815) 744-4200

USER NAME = jorgel	DESIGNED - SRB	REVISED -	
	DRAWN - JMR	REVISED -	
	CHECKED - MAG	REVISED -	
PLOT DATE = 10/3/2025	DATE - 10/22/2025	REVISED -	

STATE OF ILLINOIS
DEPARTMENT OF TRANSPORTATION

I-55 OVER MONEY CREEK
ROADWAY PLAN

SCALE: 1"=20' | SHEET 2 OF 3 SHEETS | STA. 320+00.00 TO STA. 326+00.00

F.A.I RTE.	SECTION	COUNTY	TOTAL SHEETS	SHEET NO.
55	(57-3)BR	MCLEAN	126	27

CONTRACT NO. 70F37

ILLINOIS | FED. AID PROJECT

NOTES

1. SEE SHEET 17 FOR ADDITIONAL ROADWAY DETAILS.

LEGEND

- S.N. 057-0163 & 057-0164 (SEE NOTE 1)
- PR. HOT-MIX ASPHALT SURFACE COURSE, IL-9.5, MIX "D", N70, 3"
- PR. HOT-MIX ASPHALT SHOULDERS, 10"
- PR. PAVEMENT CONNECTOR (PCC) FOR BRIDGE APPROACH SLAB
- PR. CLASS D PATCHES, TYPE III, 13"
- PR. TRAFFIC BARRIER TERMINAL, TYPE 6 / STEEL PLATE BEAM GUARDRAIL, TYPE A, 6 FOOT POSTS (AS NOTED)

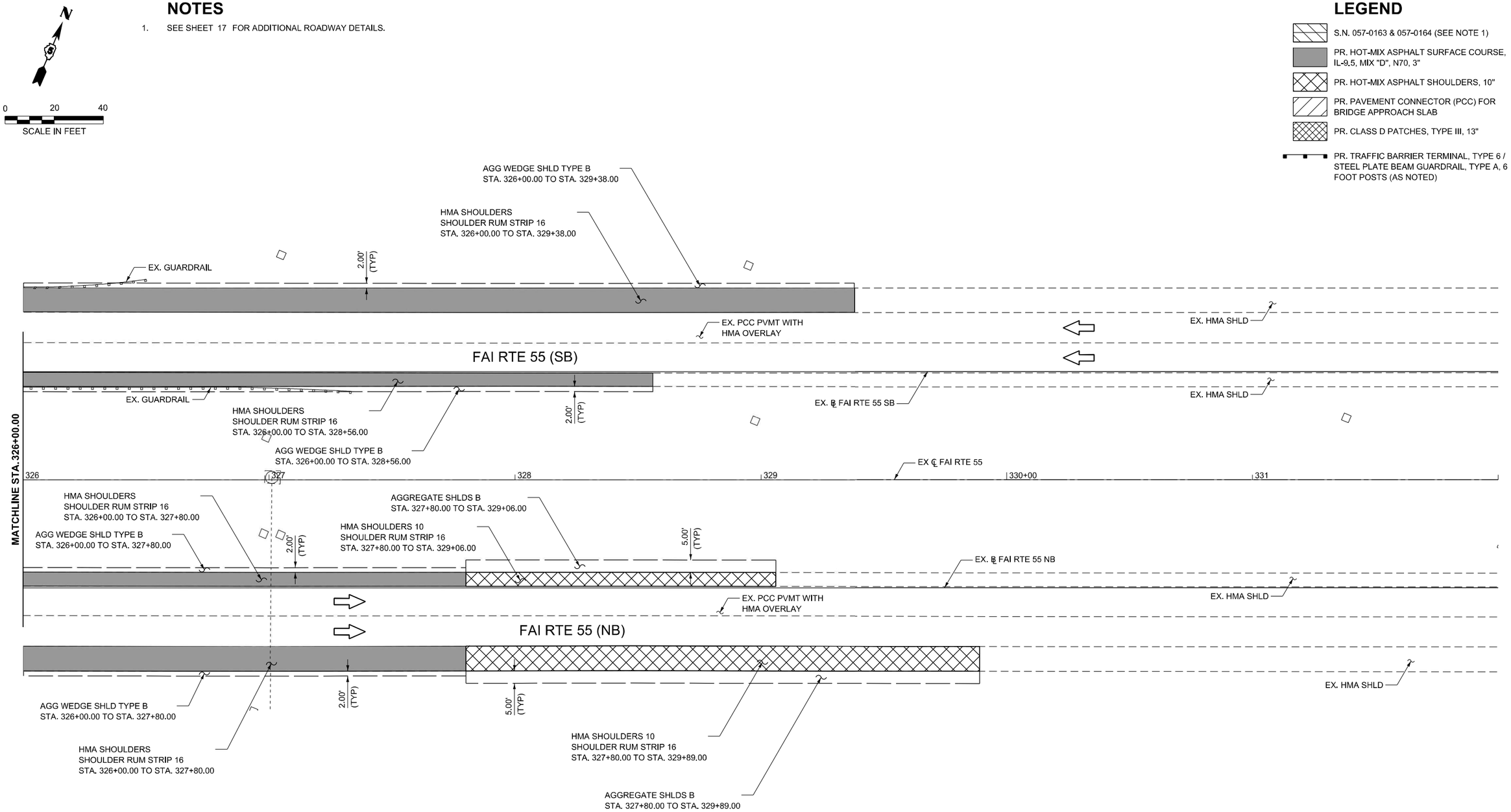

MODEL: I55_ALL-3 - Plan 6 [Sheet]
FILE NAME: S:\JOL\6300-6399\6346\125\Drawings\CAD\ORD-10.12\CADsheets\d570F37-sht-rdwy-I55.dgn

STRAND ASSOCIATES®
1170 SOUTH HOUBOLT ROAD
JOLIET, ILLINOIS 60431
(815) 744-4200

USER NAME = StevenB	DESIGNED - SRB	REVISED -	
	DRAWN - JMR	REVISED -	
	CHECKED - MAG	REVISED -	
PLOT DATE = 10/2/2025	DATE - 10/22/2025	REVISED -	

STATE OF ILLINOIS
DEPARTMENT OF TRANSPORTATION

I-55 OVER MONEY CREEK
ROADWAY PLAN

SCALE: 1"=20' | SHEET 3 OF 3 SHEETS | STA. 326+00.00 TO STA. 332+00.00

F.A.I RTE.	SECTION	COUNTY	TOTAL SHEETS	SHEET NO.
55	(57-3)BR	MCLEAN	126	28

CONTRACT NO. 70F37

ILLINOIS | FED. AID PROJECT

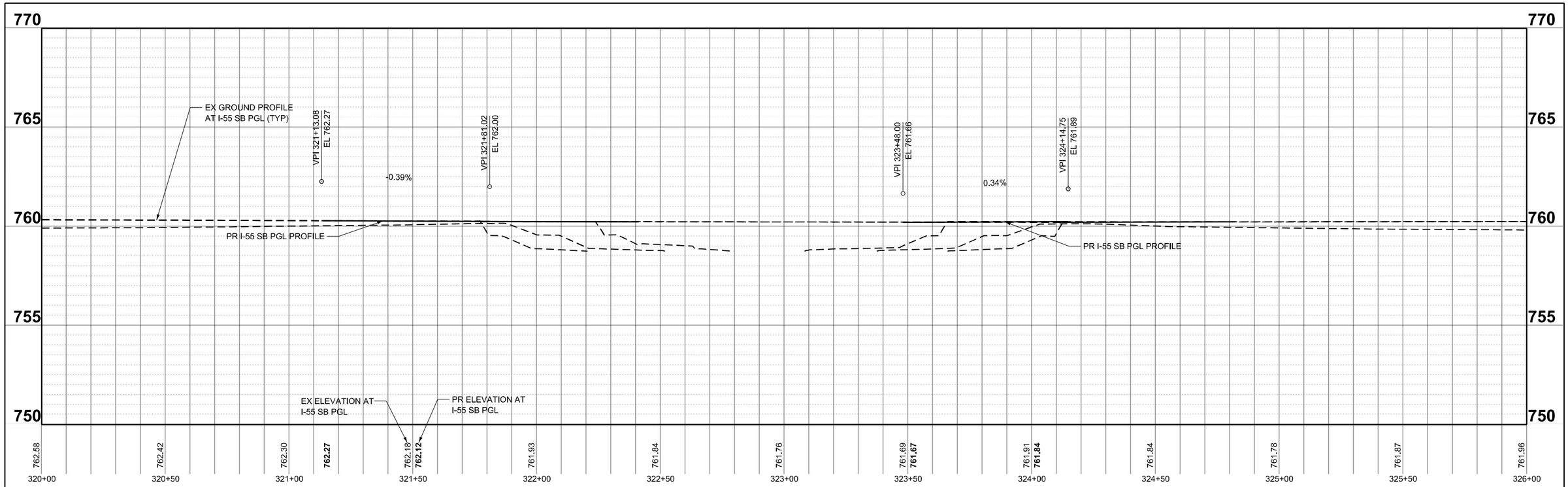

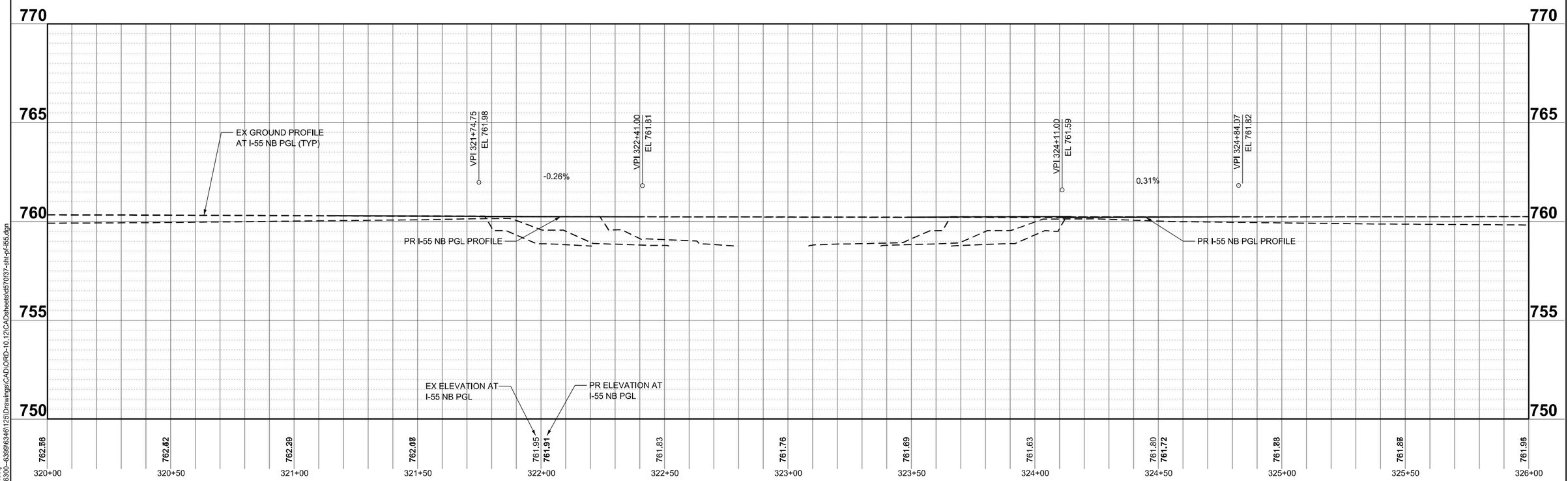

MODEL: Profile 1 [Sheet]
FILE NAME: S:\JOL\6300--6399\6346\125\Drawings\CAD\ORD-10.12\CADsheets\d570f37-sht-pf-i55.dgn

STRAND ASSOCIATES
1170 SOUTH HOUBOLT ROAD
JOLIET, ILLINOIS 60431
(815) 744-4200

USER NAME = jaker	DESIGNED - SRB	REVISED -	
	DRAWN - JMR	REVISED -	
	CHECKED - MAG	REVISED -	
PLOT DATE = 10/6/2025	DATE - 10/22/2025	REVISED -	

STATE OF ILLINOIS
DEPARTMENT OF TRANSPORTATION

I-55 OVER MONEY CREEK
ROADWAY PROFILE

SCALE: 1"=20' | SHEET 1 OF 1 SHEETS | STA. 320+00.00 TO STA. 326+00.00

F.A.I RTE.	SECTION	COUNTY	TOTAL SHEETS	SHEET NO.
55	(57-3)BR	MCLEAN	126	29

CONTRACT NO. 70F37

ILLINOIS | FED. AID PROJECT

LEGEND

PR. PCC BASE COURSE WIDENING, 9" (SEE NOTE 1)
PR. CONCRETE MEDIAN, TYPE SM (DOWELLED) (SEE NOTE 1)

S.N. 057-0162

PR. GUARDRAIL / TRAFFIC BARRIER TERMINAL (AS NOTED)

NOTES

1. SEE SHEETS 19 & 33 FOR ADDITIONAL ROADWAY DETAILS.

0 20 40
SCALE IN FEET

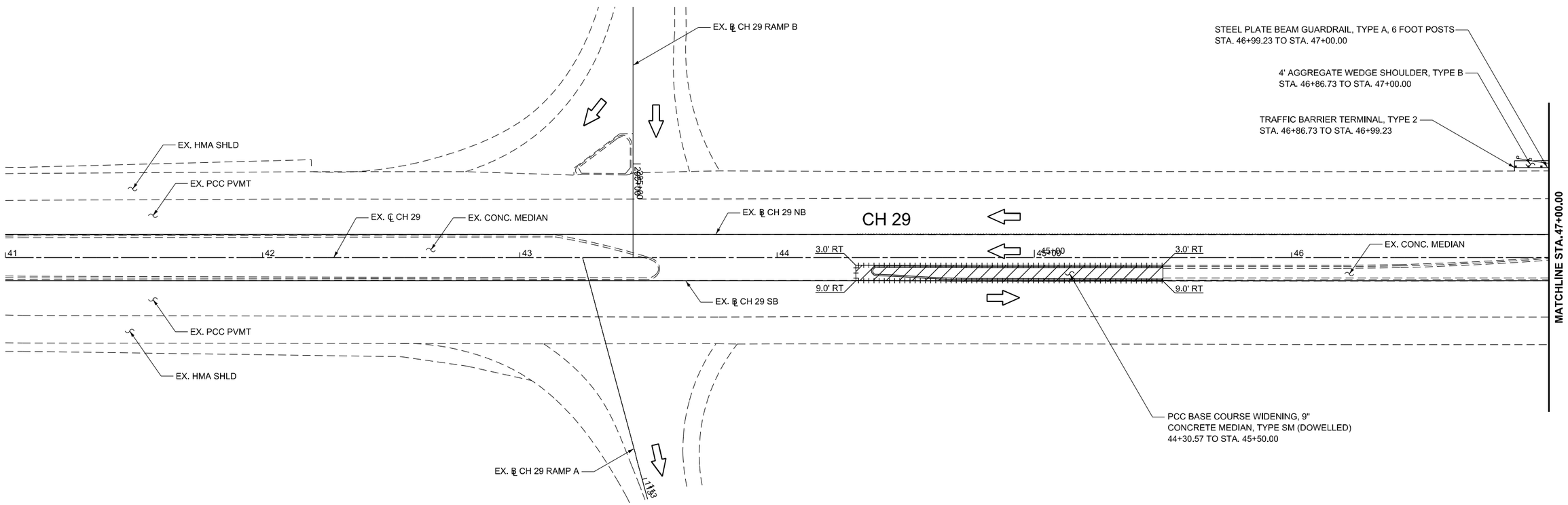

MODEL: ####
FILE NAME: S:\JOL\6300-6399\6346\125\Drawings\CAD\ORD-10.12\CAD sheets\D570F37-sht-rdwy-ch29.dgn

STRAND ASSOCIATES®
1170 SOUTH HOUBOLT ROAD
JOLIET, ILLINOIS 60431
(815) 744-4200

USER NAME = jorgel	DESIGNED - SRB	REVISED -	
	DRAWN - JMR	REVISED -	
	CHECKED - MAG	REVISED -	
PLOT DATE = 10/3/2025	DATE - 10/22/2025	REVISED -	

STATE OF ILLINOIS
DEPARTMENT OF TRANSPORTATION

COUNTY HIGHWAY 29 OVER I-55
ROADWAY PLAN

SCALE: 1"=20' | SHEET 1 OF 3 SHEETS | STA. 41+00.00 TO STA. 47+00.00

F.A.I RTE.	SECTION	COUNTY	TOTAL SHEETS	SHEET NO.
55	(57-3)BR	MCLEAN	126	30

CONTRACT NO. 70F37
ILLINOIS | FED. AID PROJECT

LEGEND

- PR. PCC BASE COURSE WIDENING, 9"
- PR. CONCRETE MEDIAN, TYPE SM (DOWELLED)
- S.N. 057-0162 (SEE NOTE 2)
- PR. GUARDRAIL / TRAFFIC BARRIER TERMINAL (AS NOTED)

NOTES

1. SEE SHEET 19 FOR ADDITIONAL ROADWAY DETAILS.
2. SEE SHEETS 63 - 81 FOR S.N. 057-0162 INSTALLATION DETAILS.

N

0 20 40
SCALE IN FEET

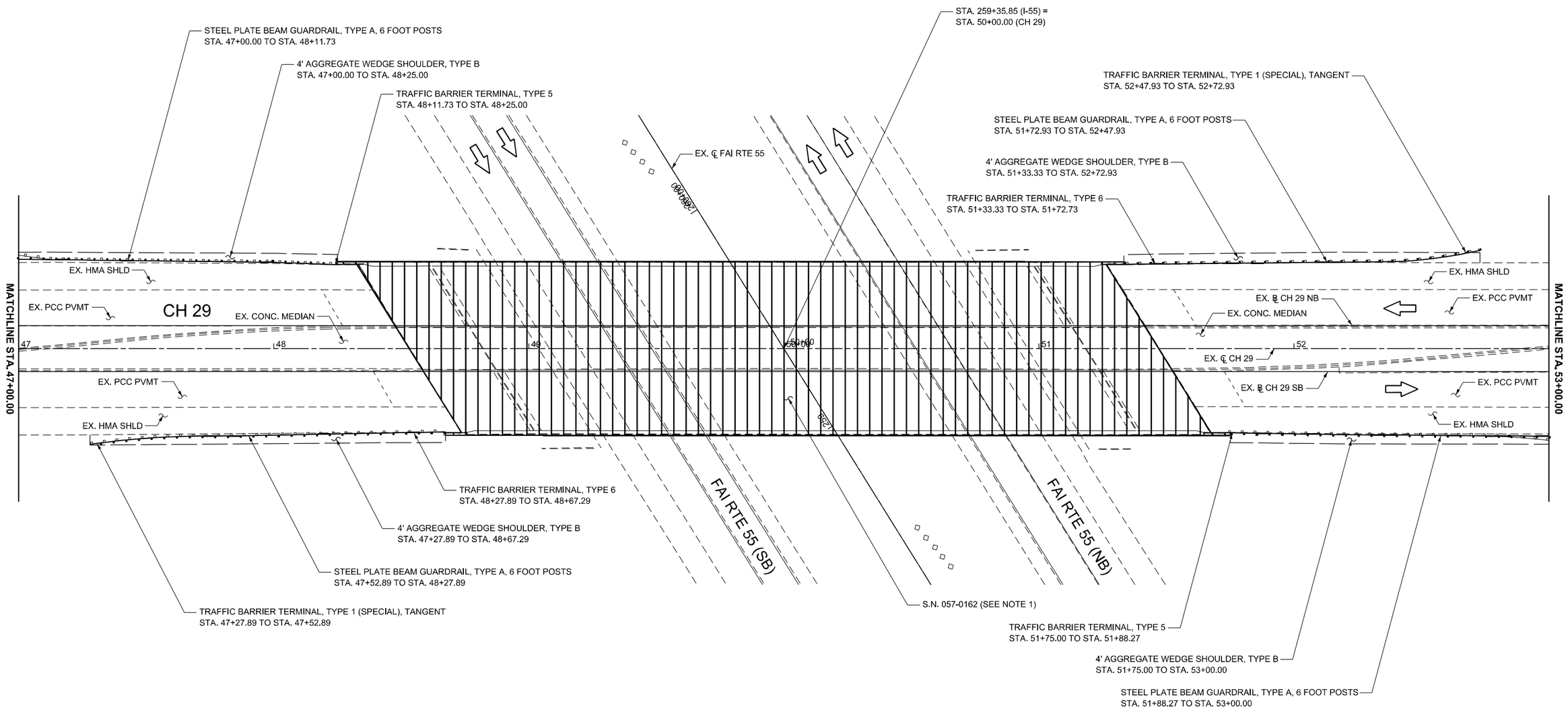

MODEL: ####
FILE NAME: S:\JOL\6300-6399\6346\125\Drawings\CAD\ORD-10.12\CAD\sheets\D570F37-sht-rdwy-ch29.dgn

STRAND ASSOCIATES®
1170 SOUTH HOUBOLT ROAD
JOLIET, ILLINOIS 60431
(815) 744-4200

USER NAME = jorgel	DESIGNED - SRB	REVISED -
	DRAWN - JMR	REVISED -
	CHECKED - MAG	REVISED -
PLOT DATE = 10/3/2025	DATE - 10/22/2025	REVISED -

STATE OF ILLINOIS
DEPARTMENT OF TRANSPORTATION

COUNTY HIGHWAY 29 OVER I-55
ROADWAY PLAN

SCALE: 1"=20' | SHEET 2 OF 3 SHEETS | STA. 47+00.00 TO STA. 53+00.00

F.A.I RTE.	SECTION	COUNTY	TOTAL SHEETS	SHEET NO.
55	(57-3)BR	MCLEAN	126	31

CONTRACT NO. 70F37

ILLINOIS | FED. AID PROJECT

LEGEND

PR. PCC BASE COURSE WIDENING, 9" (SEE NOTE 1)
PR. CONCRETE MEDIAN, TYPE SM (DOWELLED) (SEE NOTE 1)

S.N. 057-0162

PR. GUARDRAIL / TRAFFIC BARRIER TERMINAL (AS NOTED)

NOTES

1. SEE SHEETS 19 & 34 FOR ADDITIONAL ROADWAY DETAILS.

0 20 40
SCALE IN FEET

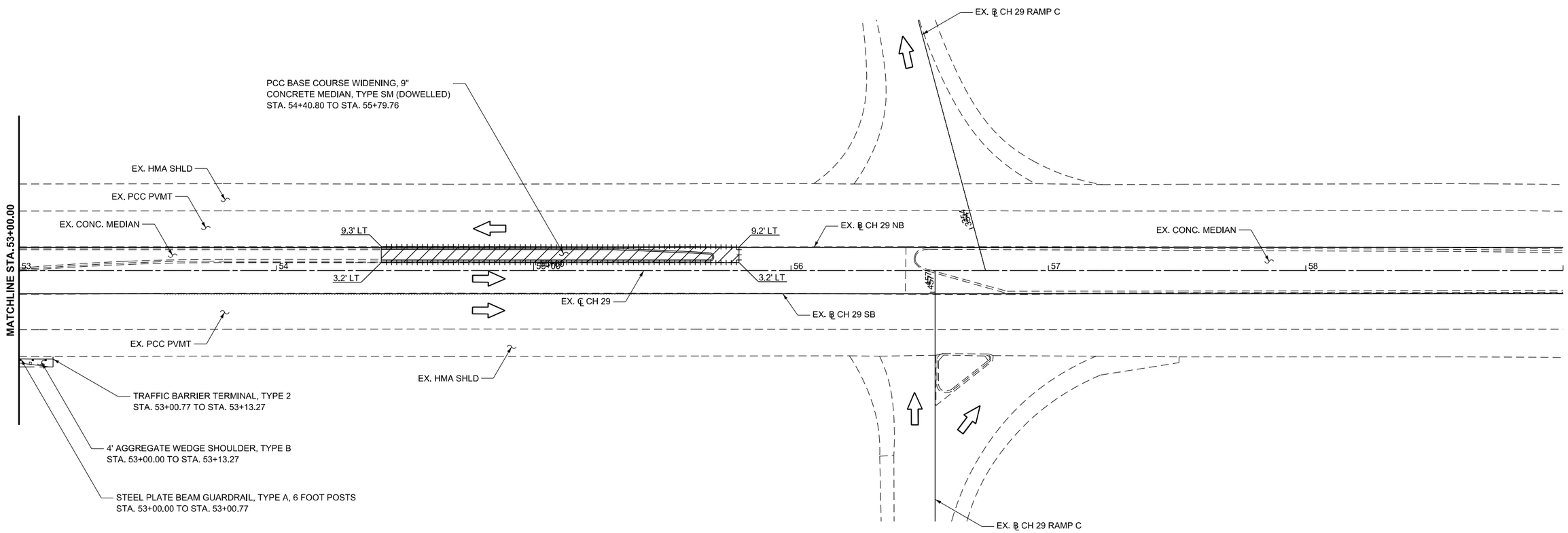

MODEL: TOWANDA-3 - Plan 3 [Sheet]
FILE NAME: S:\JOL\6300--6399\6346\125\Drawings\CAD\ORD-10.12\CADsheets\D570F37-sht-rdwy-ch29.dgn

STRAND ASSOCIATES
1170 SOUTH HOUBOLT ROAD
JOLIET, ILLINOIS 60431
(815) 744-4200

USER NAME = jorgel	DESIGNED - SRB	REVISED -	
	DRAWN - JMR	REVISED -	
	CHECKED - MAG	REVISED -	
PLOT DATE = 10/2/2025	DATE - 10/22/2025	REVISED -	

STATE OF ILLINOIS
DEPARTMENT OF TRANSPORTATION

COUNTY HIGHWAY 29 OVER I-55
ROADWAY PLAN

SCALE: 1"=20' | SHEET 3 OF 3 SHEETS | STA. 53+00.00 TO STA. 59+00.00

F.A.I RTE.	SECTION	COUNTY	TOTAL SHEETS	SHEET NO.
55	(57-3)BR	MCLEAN	126	32
		CONTRACT NO. 70F37		
	ILLINOIS	FED. AID PROJECT		

GENERAL NOTES

1. DEFORMED BARS @ 36" CTS. OR AS DIRECTED BY THE ENGINEER. EPOXY GROUT BARS IN 6" MIN. HOLES ACCORDING TO ARTICLE 584 OF THE STANDARD SPECIFICATIONS.
2. THIS WORK WILL BE PAID FOR AT THE CONTRACT UNIT PRICE PER SQ. FT FOR CONCRETE MEDIAN, TYPE TYPE SM (DOWELLED), INCLUDING THE COST OF FURNISHING AND INSTALLING THE DEFORMED BARS, TIE BARS, EPOXY GROUT, PAVEMENT FABRIC, AND NO ADDITIONAL COMPENSATION WILL BE ALLOWED.
3. MEDIAN NOSES SHALL BE RAMPED IN ACCORDANCE WITH STANDARD 606301.
4. INSTALLATION OF PCC BASE COURSE WILL BE PAID FOR AT THE CONTRACT UNIT PRICE PER SQ. YD. PORTLAND CEMENT CONCRETE BASE WIDENING COURSE, 9".
5. JOINT SHALL BE SANDBLASTED PRIOR TO PLACEMENT OF MEDIAN CAP. THIS WORK SHALL BE INCLUDED IN THE COST PER SQUARE FOOT FOR CONCRETE MEDIAN, TYPE SM (DOWELLED).

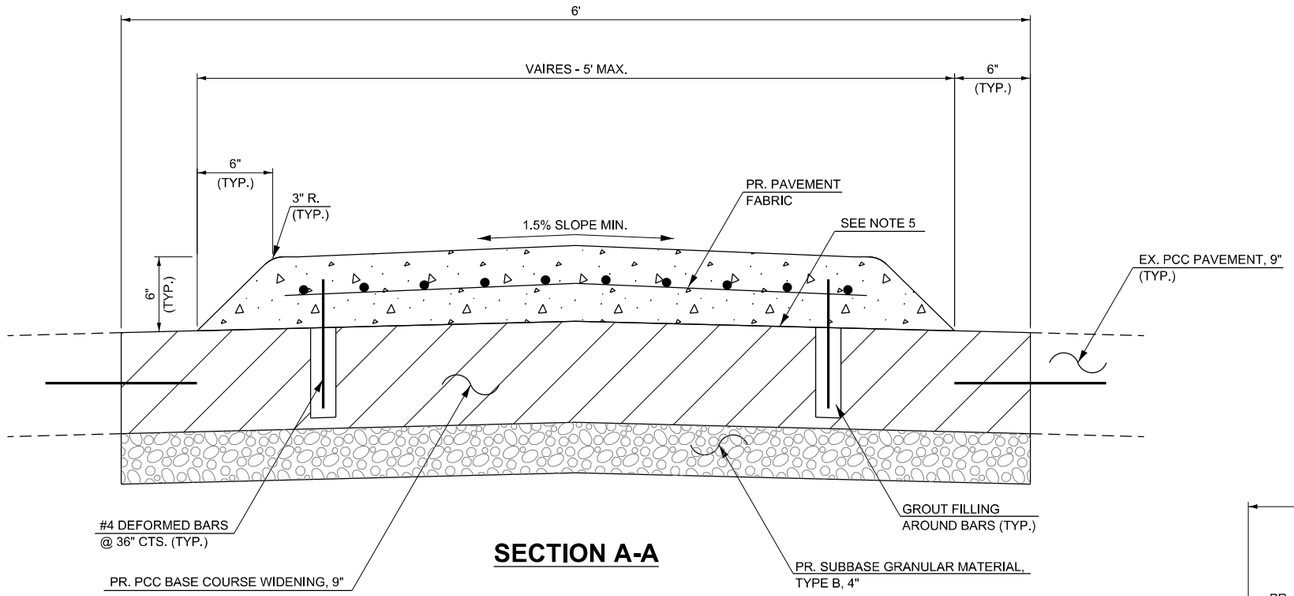

SECTION A-A

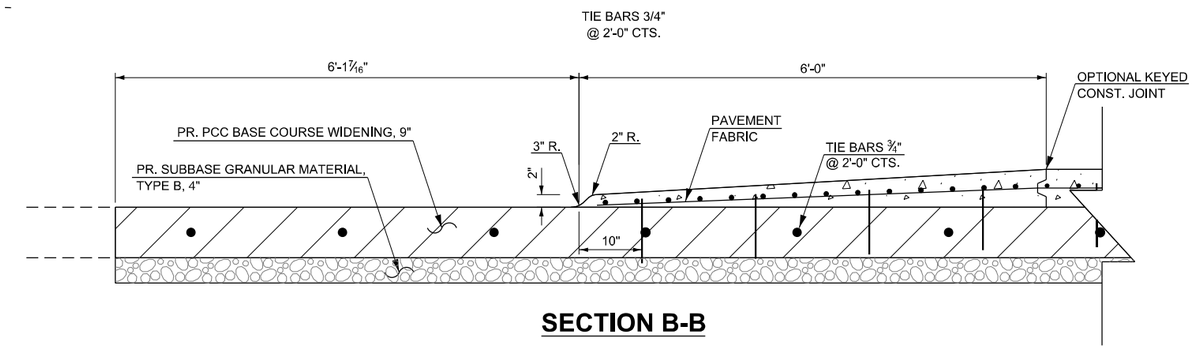

SECTION B-B

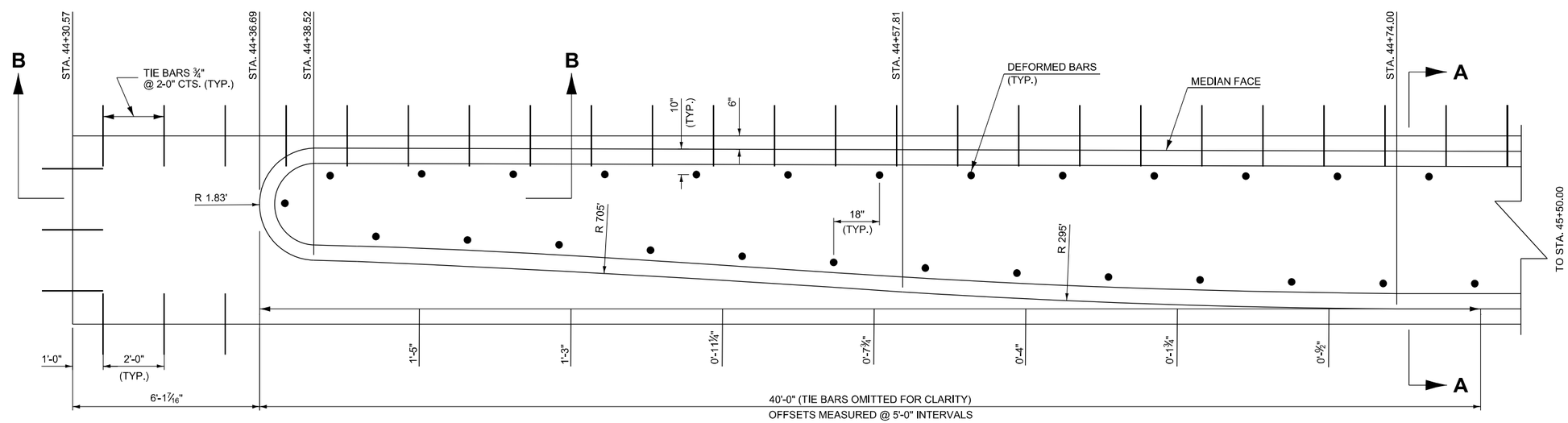

PLAN OF MEDIAN

MODEL: Concrete Median Detail [Sheet]
FILE NAME: S:\JOL\6300-6399\63461\25\Drawings\CAD\ORD-10.12\CADsheets\D570F37-sht-ch29-median-detail.dgn

STRAND ASSOCIATES®
1170 SOUTH HOUBOLT ROAD
JOLIET, ILLINOIS 60431
(815) 744-4200

USER NAME = jaker	DESIGNED - SRB	REVISED -	
	DRAWN - JMR	REVISED -	
	CHECKED - MAG	REVISED -	
PLOT DATE = 9/4/2025	DATE - 10/22/2025	REVISED -	

STATE OF ILLINOIS
DEPARTMENT OF TRANSPORTATION

CONCRETE MEDIAN, TYPE SM (DOWELLED)

SCALE: | SHEET 1 OF 2 SHEETS | STA. TO STA.

F.A.I RTE.	SECTION	COUNTY	TOTAL SHEETS	SHEET NO.
55	(57-3)BR	MCLEAN	126	33
		CONTRACT NO. 70F37		
	ILLINOIS	FED. AID PROJECT		

GENERAL NOTES

1. DEFORMED BARS @ 36" CTS. OR AS DIRECTED BY THE ENGINEER. EPOXY GROUT BARS IN 6" MIN. HOLES ACCORDING TO ARTICLE 584 OF THE STANDARD SPECIFICATIONS.
2. THIS WORK WILL BE PAID FOR AT THE CONTRACT UNIT PRICE PER SQ. FT FOR CONCRETE MEDIAN, TYPE TYPE SM (DOWELLED), INCLUDING THE COST OF FURNISHING AND INSTALLING THE DEFORMED BARS, TIE BARS, EPOXY GROUT, PAVEMENT FABRIC, AND NO ADDITIONAL COMPENSATION WILL BE ALLOWED.
3. MEDIAN NOSES SHALL BE RAMPED IN ACCORDANCE WITH STANDARD 606301.
4. INSTALLATION OF PCC BASE COURSE WILL BE PAID FOR AT THE CONTRACT UNIT PRICE PER SQ. YD. PORTLAND CEMENT CONCRETE BASE COURSE WIDENING, 9".
5. JOINT SHALL BE SANDBLASTED PRIOR TO PLACEMENT OF MEDIAN CAP. THIS WORK SHALL BE INCLUDED IN THE COST PER SQUARE FOOT FOR CONCRETE MEDIAN, TYPE SM (DOWELLED).

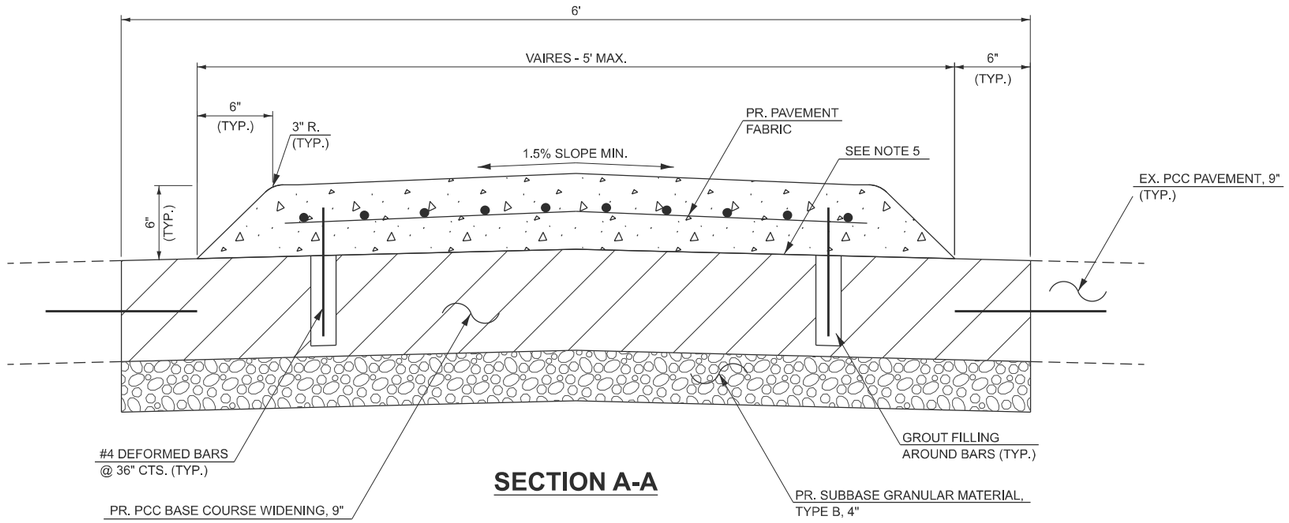

SECTION A-A

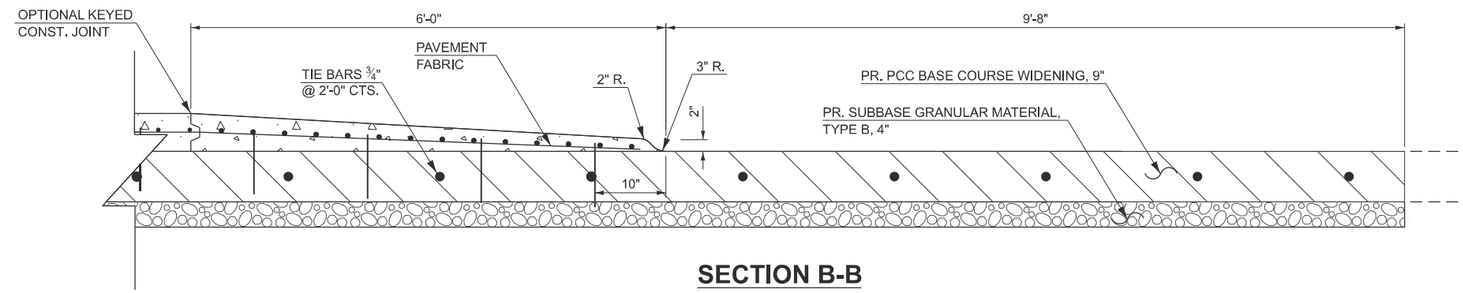

SECTION B-B

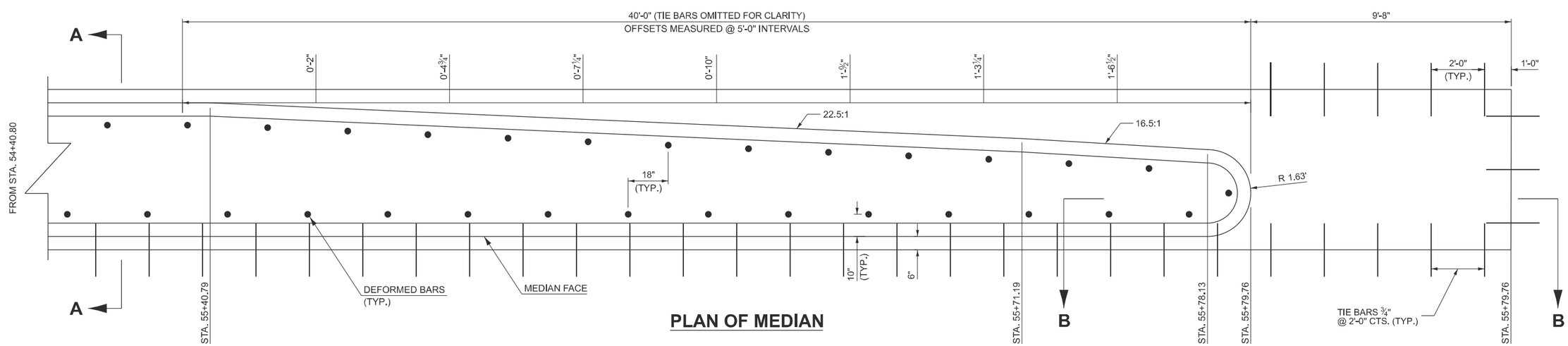

PLAN OF MEDIAN

MODEL: Median Detail 2 [Sheet]
FILE NAME: S:\JOL\6300-6399\6346\125\Drawings\CAD\ORD-10.12\CAD\sheets\D570F37-sht-ch29-median-detail.dgn

STRAND ASSOCIATES
1170 SOUTH HOUBOLT ROAD
JOLIET, ILLINOIS 60431
(815) 744-4200

USER NAME = jaker	DESIGNED - JMR	REVISED -	
	DRAWN - SRB	REVISED -	
	CHECKED - MAG	REVISED -	
PLOT DATE = 9/15/2025	DATE - 10/03/2025	REVISED -	

STATE OF ILLINOIS
DEPARTMENT OF TRANSPORTATION

CONCRETE MEDIAN, TYPE SM (DOWELLED)

SCALE: | SHEET 2 OF 2 SHEETS | STA. | TO STA.

F.A.I RTE.	SECTION	COUNTY	TOTAL SHEETS	SHEET NO.
55	(57-3)BR	MCLEAN	126	34

CONTRACT NO. 70F37

ILLINOIS | FED. AID PROJECT

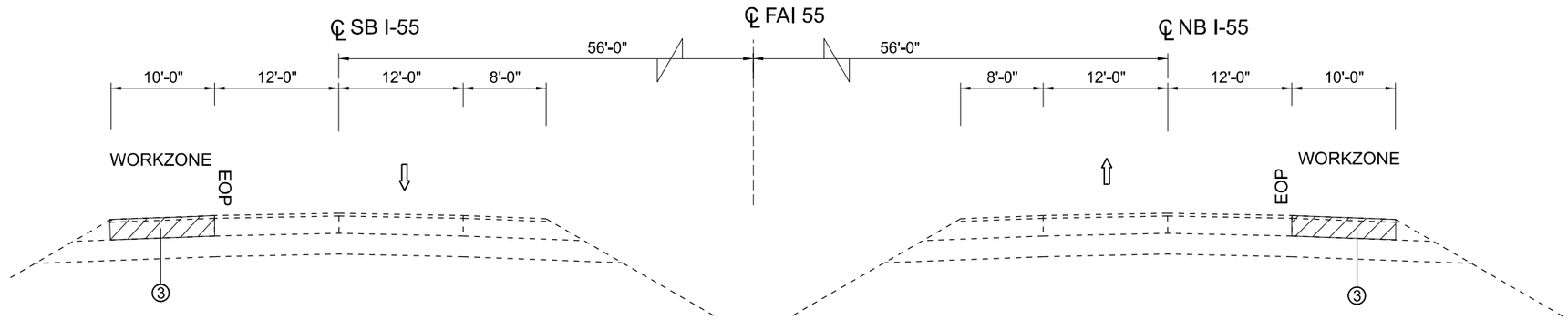

STA 316+83 TO STA 328+56

I-55 AT MONEY CREEK
PRE-STAGE

STA 317+25 TO STA 329+06

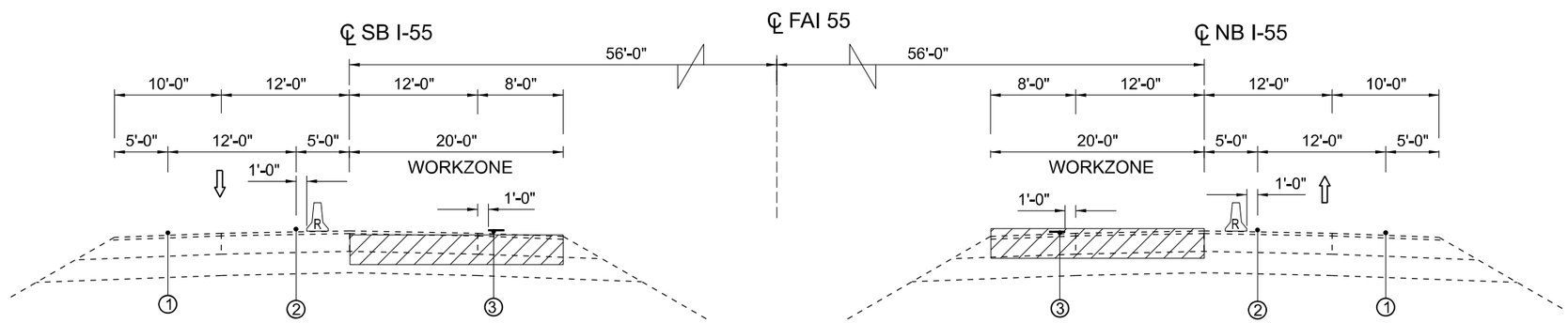

STA 258+66 TO STA 260+38

I-55 AT MONEY CREEK
STAGE 1

STA 258+34 TO STA 259+75

LEGEND

① TEMPORARY PAVEMENT MARKING -LINE 4"-TYPE IV TAPE - WHITE

② TEMPORARY PAVEMENT MARKING -LINE 4"-TYPE IV TAPE - YELLOW

③ PAVED SHOULDER REMOVAL
AND HOT-MIX ASPHALT SURFACE REMOVAL
AND REPLACE WITH HMA SHOULDER 3.25"
AND SHOULDER RUMBLE STRIP, 16"
(SEE ROADWAY AND REMOVAL PLANS FOR LIMITS)

TEMPORARY CONCRETE BARRIER PINNED

ONE WAY TRAFFIC

WORK ZONE

M/OT TYPICAL
D570F37-MOT Typical.dgn

AMES Engineering, Inc.
CONSULTING ENGINEERS
6330 Belmont Road, Suite 4B
Downers Grove, IL 60516

USER NAME = MSomer	DESIGNED - JAR	REVISED -	
	DRAWN - MA	REVISED -	
	CHECKED - AS	REVISED -	
PLOT DATE =10/22/2025	DATE - 05-08-25	REVISED -	

STATE OF ILLINOIS
DEPARTMENT OF TRANSPORTATION

TYPICAL SECTIONS I-55 AT MONEY CREEK, PRE-STAGE

SCALE: | SHEET OF SHEETS | STA. TO STA.

F.A.I RTE.	SECTION	COUNTY	TOTAL SHEETS	SHEET NO.
55	(57-3) BR	McLEAN	126	35
		CONTRACT NO. 70F37		
		ILLINOIS	FED. AID PROJECT	

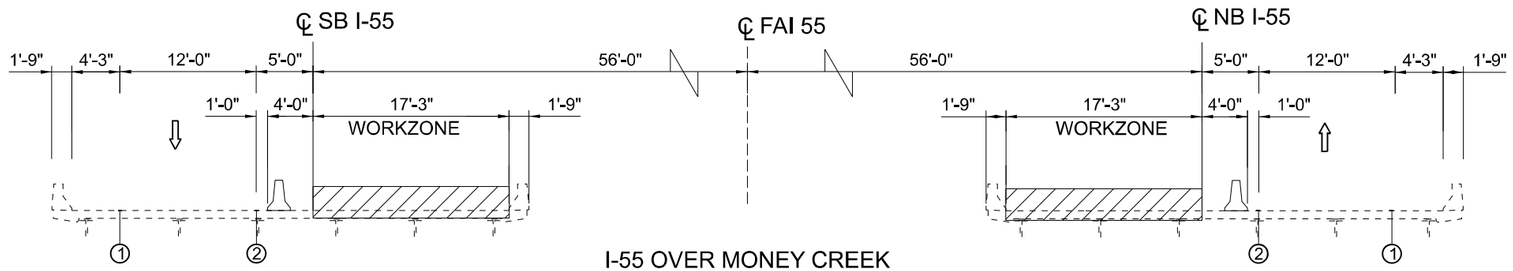

STA 321+58 TO STA 323+80
SN 057-0163

I-55 OVER MONEY CREEK
STAGE 1

STA 322+08 TO STA 324+66
SN 057-0164

LEGEND

① TEMPORARY PAVEMENT MARKING -LINE 4"-TYPE IV TAPE - WHITE

② TEMPORARY PAVEMENT MARKING -LINE 4"-TYPE IV TAPE - YELLOW

ONE WAY

TEMPORARY CONCRETE BARRIER

WORK ZONE

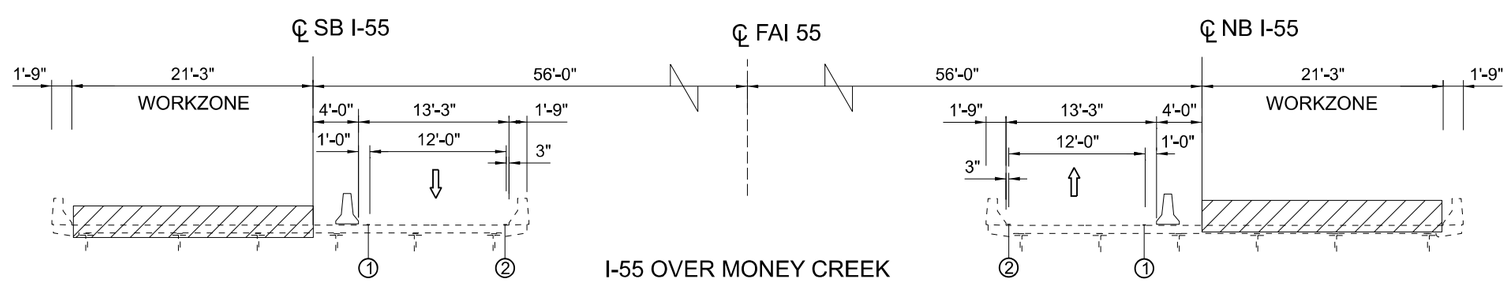

STA 321+46 TO STA 323+71
SN 057-0163

I-55 OVER MONEY CREEK
STAGE 2

STA 322+18 TO STA 324+42
SN 057-0164

MOT TYPICAL
D57DF37-MOT Typical.dgn

AMES Engineering, Inc. CONSULTING ENGINEERS 6330 Belmont Road, Suite 4B Downers Grove, IL 60516	USER NAME = MSomer	DESIGNED - JAR	REVISED -	STATE OF ILLINOIS DEPARTMENT OF TRANSPORTATION	TYPICAL SECTIONS I-55 OVER MONEY CREEK, STAGES 1 AND 2	F.A.I RTE.	SECTION	COUNTY	TOTAL SHEETS / SHEET NO.
		DRAWN - MA	REVISED -			55	(57-3) BR	McLEAN	126 / 36
		CHECKED - AS	REVISED -					CONTRACT NO. 70F37	
	PLOT DATE =10/22/2025	DATE - 05-08-25	REVISED -		SCALE: SHEET OF SHEETS STA. TO STA.		ILLINOIS	FED. AID PROJECT	

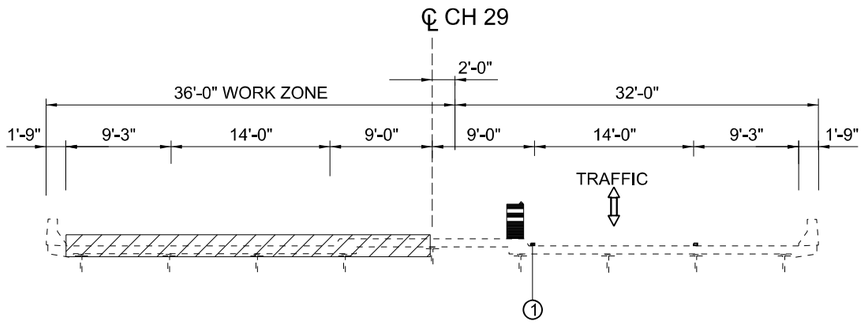

CH 29 OVER I-55
STAGE 1
SN 057-0162

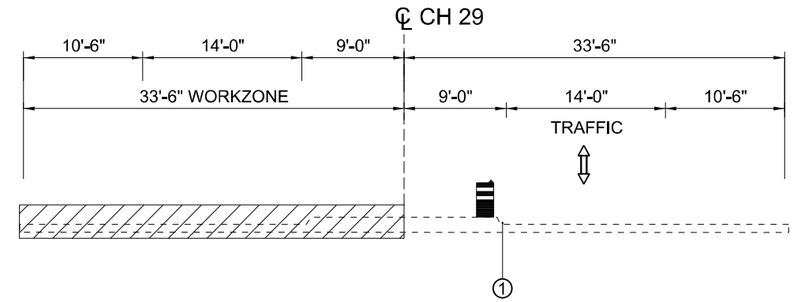

CH 29 NEAR STRUCTURES OVER I-55
STAGE 1

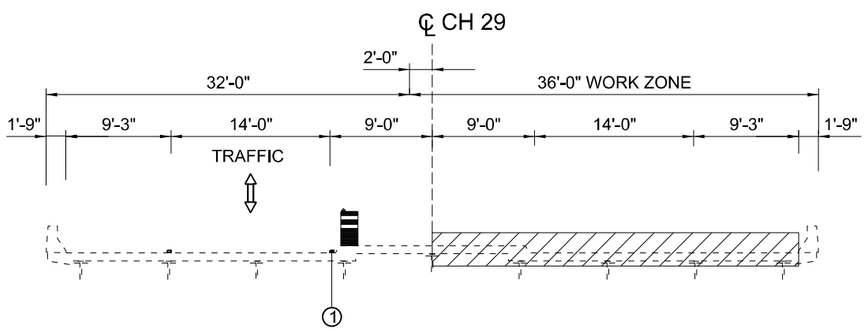

CH 29 OVER I-55
STAGE 2
SN 057-0162

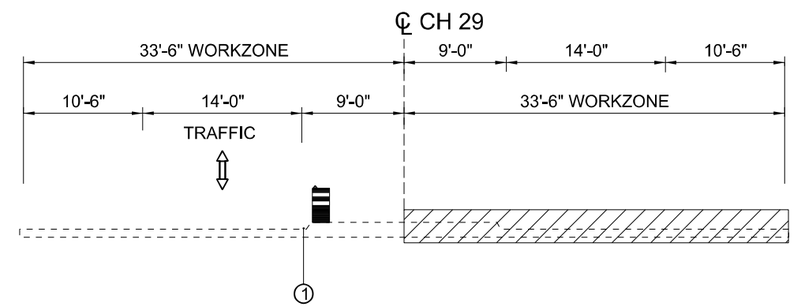

CH 29 NEAR STRUCTURES OVER I-55
STAGE 2

LEGEND

- DRUM WITH STEADY BURNING LIGHT
- ① TEMPORARY PAVEMENT MARKING -LINE 4"-TYPE IV TAPE - WHITE
- 2-WAY TRAFFIC
- WORK ZONE

MOT TYPICAL
D570F37-MOT Typical.dgn

AMES Engineering, Inc.
CONSULTING ENGINEERS
6330 Belmont Road, Suite 4B
Downers Grove, IL 60516

USER NAME = MSomer	DESIGNED - JAR	REVISED -	
	DRAWN - MA	REVISED -	
	CHECKED - AS	REVISED -	
PLOT DATE =10/22/2025	DATE - 05-08-25	REVISED -	

STATE OF ILLINOIS
DEPARTMENT OF TRANSPORTATION

TYPICAL SECTIONS CH 29 OVER I-55, STAGES 1 AND 2

SCALE: | SHEET OF SHEETS | STA. TO STA.

F.A.I RTE.	SECTION	COUNTY	TOTAL SHEETS	SHEET NO.
55	(57-3) BR	McLEAN	126	37
		CONTRACT NO. 70F37		
	ILLINOIS	FED. AID PROJECT		

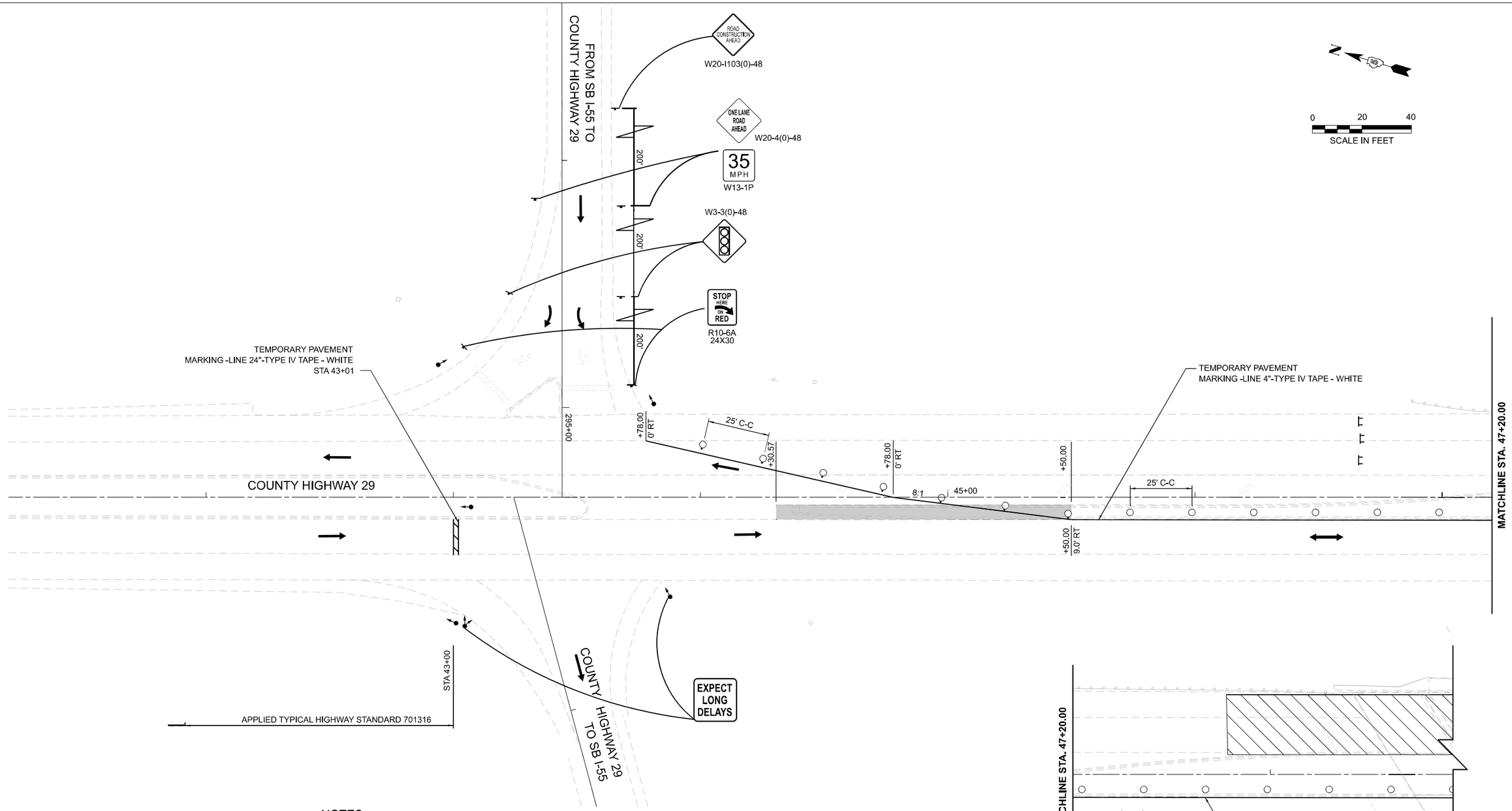

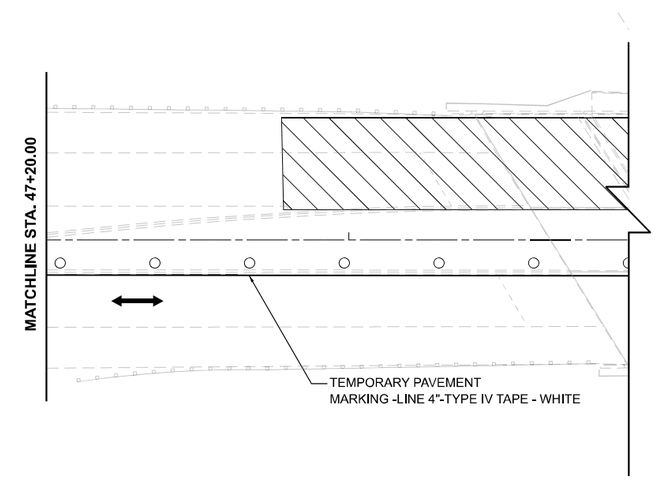

LEGEND:

- WORKZONE
- TEMPORARY PAVEMENT
- SIGN
- DRUM
- DRUM WITH STEADY BURNING BI-DIRECTIONAL LIGHT AT 25' C-C
- TYPE III BARRICADE WITH FLASHING LIGHTS
- TEMPORARY SIGNAL

NOTES:

REFLECTORIZED TEMPORARY PAVEMENT MARKING TAPE SHALL BE PLACED THROUGHOUT THE TAPER, ALONGSIDE THE WORK AREA, ON BOTH SIDES OF THE WORK AREA FROM STOP BAR TO STOP BAR, ALSO, ANY EXISTING MARKINGS THAT CONFLICT WITH THE STAGED TRAFFIC MARKINGS SHALL BE BLACKED OUT. COST OF BLACKING OUT EXISTING MARKINGS AND FOR PLACEMENT AND REMOVAL OF SHORT-TERM MARKINGS SHALL BE INCLUDED IN COST FOR TRAFFIC CONTROL STANDARD 701316 (SPECIAL).

SIGNS SHALL BE FURNISHED, PLACED, AND MAINTAINED BY THE CONTRACTOR. COST SHALL BE INCLUDED WITH TRAFFIC CONTROL STANDARD 701316.

THE FINAL LOCATION OF ALL TRAFFIC CONTROL ITEMS SHALL BE VERIFIED BY THE ENGINEER.

MEDIAN WORK SHALL BE PERFORMED UNDER STANDARD 701201

HWY 29 Stage 1-Plan 1 [Sheet]
D570F37-MOT container.dgn

AMES Engineering, Inc.
CONSULTING ENGINEERS
6330 Belmont Road, Suite 4B
Downers Grove, IL 60516

USER NAME = MSomer	DESIGNED - JAR	REVISED -	
	DRAWN - MA	REVISED -	
	CHECKED - AS	REVISED -	
PLOT DATE =10/22/2025	DATE - 05-08-25	REVISED -	

STATE OF ILLINOIS
DEPARTMENT OF TRANSPORTATION

MAINTENANCE OF TRAFFIC
COUNTY HIGHWAY 29 - STAGE 1

SCALE: 1"=20' | SHEET OF SHEETS | STA. 41+00.00 TO STA. 48+70.00

F.A.I RTE.	SECTION	COUNTY	TOTAL SHEETS	SHEET NO.
55	(57-3) BR	McLEAN	126	38
		CONTRACT NO. 70F37		
		ILLINOIS	FED. AID PROJECT	

LEGEND:

- WORKZONE
- TEMPORARY PAVEMENT
- SIGN
- DRUM
- DRUM WITH STEADY BURNING BI-DIRECTIONAL LIGHT AT 25' C-C
- TYPE III BARRICADE WITH FLASHING LIGHTS
- TEMPORARY SIGNAL

NOTES:

REFLECTORIZED TEMPORARY PAVEMENT MARKING TAPE SHALL BE PLACED THROUGHOUT THE TAPER, ALONGSIDE THE WORK AREA, ON BOTH SIDES OF THE WORK AREA FROM STOP BAR TO STOP BAR, ALSO, ANY EXISTING MARKINGS THAT CONFLICT WITH THE STAGED TRAFFIC MARKINGS SHALL BE BLACKED OUT. COST OF BLACKING OUT EXISTING MARKINGS AND FOR PLACEMENT AND REMOVAL OF SHORT-TERM MARKINGS SHALL BE INCLUDED IN COST FOR TRAFFIC CONTROL STANDARD 701316 (SPECIAL).

SIGNS SHALL BE FURNISHED, PLACED, AND MAINTAINED BY THE CONTRACTOR. COST SHALL BE INCLUDED WITH TRAFFIC CONTROL STANDARD 701316.

THE FINAL LOCATION OF ALL TRAFFIC CONTROL ITEMS SHALL BE VERIFIED BY THE ENGINEER.

MEDIAN WORK SHALL BE PERFORMED UNDER STANDARD 701201

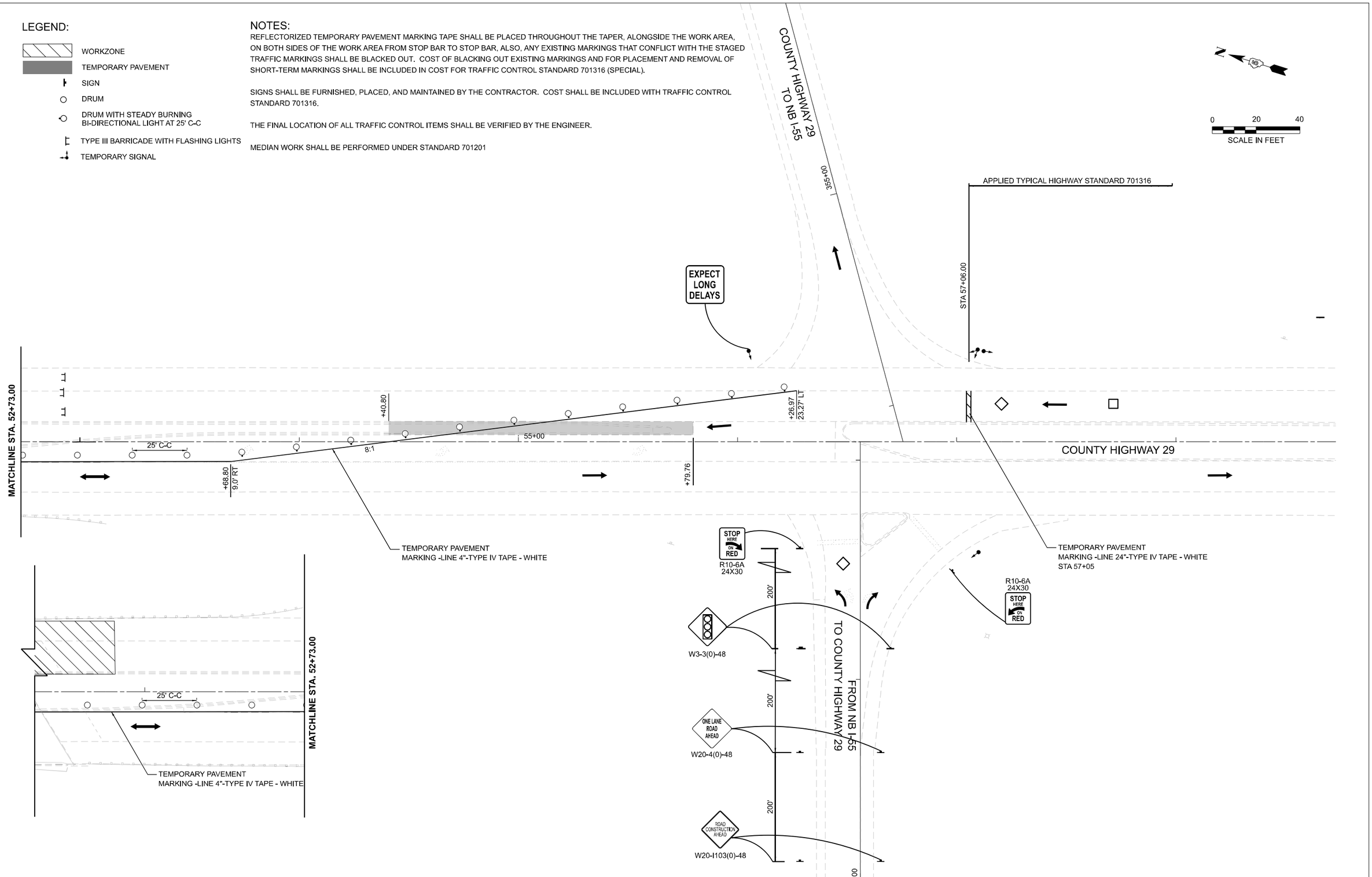

HWY 29 Stage 1-Plan 2 [Sheet]
D570F37-MOT container.dgn

AMES Engineering, Inc. CONSULTING ENGINEERS 6330 Belmont Road, Suite 4B Downers Grove, IL 60516	USER NAME = MSomer	DESIGNED - JAR	REVISED -	STATE OF ILLINOIS DEPARTMENT OF TRANSPORTATION	MAINTENANCE OF TRAFFIC COUNTY HIGHWAY 29 - STAGE 1	F.A.I RTE.	SECTION	COUNTY	TOTAL SHEETS / SHEET NO.
		DRAWN - MA	REVISED -			55	(57-3) BR	McLEAN	126 / 39
		CHECKED - AS	REVISED -					CONTRACT NO. 70F37	
	PLOT DATE =10/22/2025	DATE - 05-08-25	REVISED -		SCALE: 1"=20' SHEET OF SHEETS STA. 51+53.00 TO STA. 59+00.00		ILLINOIS	FED. AID PROJECT	

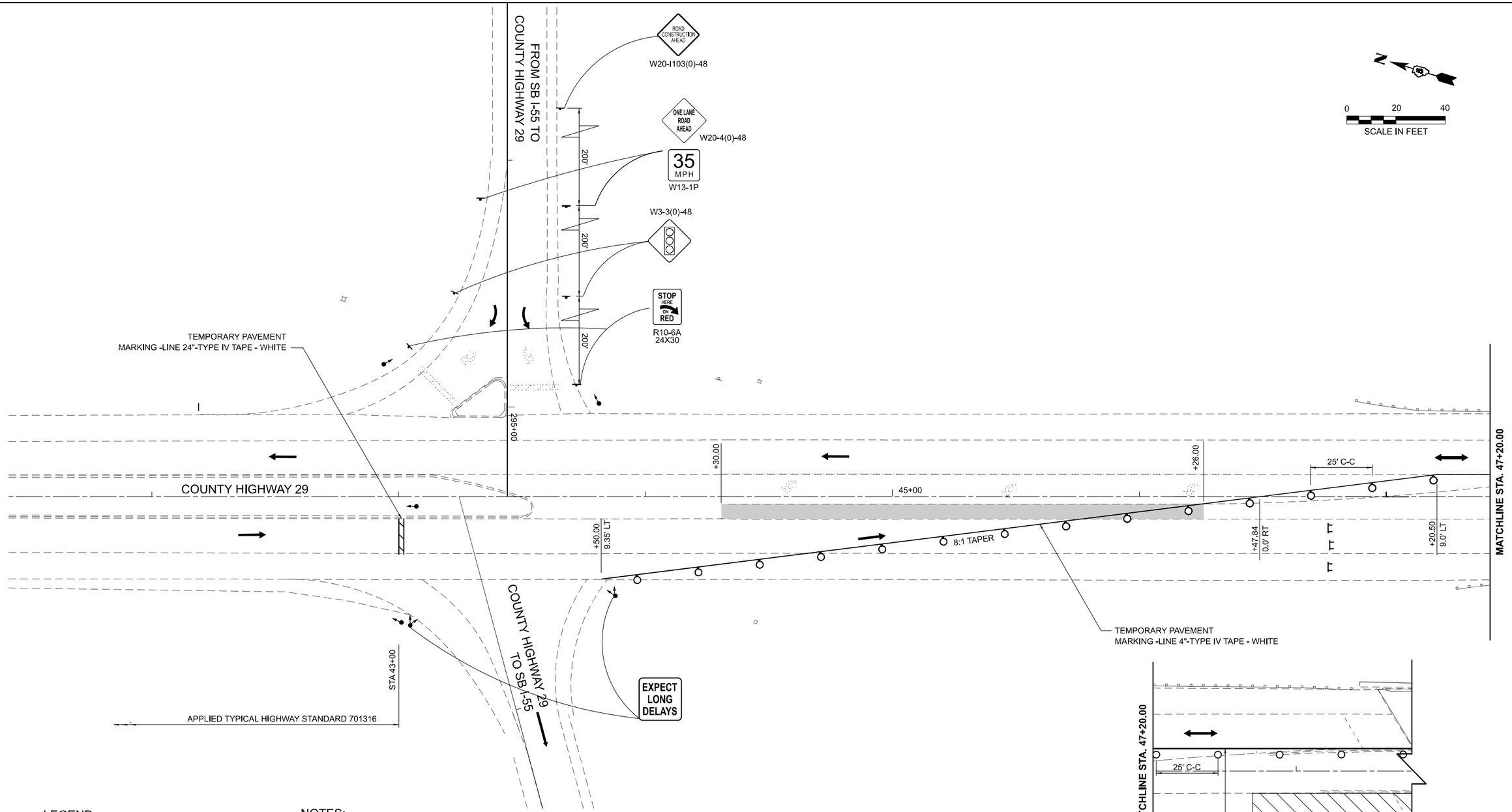

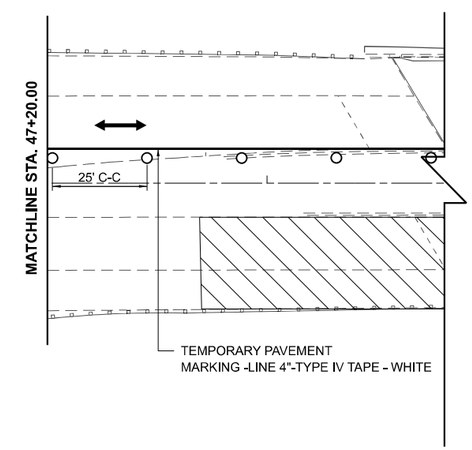

LEGEND:

- WORKZONE
- TEMPORARY PAVEMENT
- SIGN
- DRUM
- DRUM WITH STEADY BURNING BI-DIRECTIONAL LIGHT AT 25' C-C
- TYPE III BARRICADE WITH FLASHING LIGHTS
- TEMPORARY SIGNAL

NOTES:

REFLECTORIZED TEMPORARY PAVEMENT MARKING TAPE SHALL BE PLACED THROUGHOUT THE TAPER, ALONGSIDE THE WORK AREA, ON BOTH SIDES OF THE WORK AREA FROM STOP BAR TO STOP BAR, ALSO, ANY EXISTING MARKINGS THAT CONFLICT WITH THE STAGED TRAFFIC MARKINGS SHALL BE BLACKED OUT. COST OF BLACKING OUT EXISTING MARKINGS AND FOR PLACEMENT AND REMOVAL OF SHORT-TERM MARKINGS SHALL BE INCLUDED IN COST FOR TRAFFIC CONTROL STANDARD 701316 (SPECIAL).

SIGNS SHALL BE FURNISHED, PLACED, AND MAINTAINED BY THE CONTRACTOR. COST SHALL BE INCLUDED WITH TRAFFIC CONTROL STANDARD 701316.

THE FINAL LOCATION OF ALL TRAFFIC CONTROL ITEMS SHALL BE VERIFIED BY THE ENGINEER.

MEDIAN WORK SHALL BE PERFORMED UNDER STANDARD 701201

LEGEND:

- WORKZONE
- TEMPORARY PAVEMENT
- SIGN
- DRUM
- DRUM WITH STEADY BURNING BI-DIRECTIONAL LIGHT AT 25' C-C
- TYPE III BARRICADE WITH FLASHING LIGHTS
- TEMPORARY SIGNAL

NOTES:

REFLECTORIZED TEMPORARY PAVEMENT MARKING TAPE SHALL BE PLACED THROUGHOUT THE TAPER, ALONGSIDE THE WORK AREA, ON BOTH SIDES OF THE WORK AREA FROM STOP BAR TO STOP BAR, ALSO, ANY EXISTING MARKINGS THAT CONFLICT WITH THE STAGED TRAFFIC MARKINGS SHALL BE BLACKED OUT. COST OF BLACKING OUT EXISTING MARKINGS AND FOR PLACEMENT AND REMOVAL OF SHORT-TERM MARKINGS SHALL BE INCLUDED IN COST FOR TRAFFIC CONTROL STANDARD 701316 (SPECIAL).

SIGNS SHALL BE FURNISHED, PLACED, AND MAINTAINED BY THE CONTRACTOR. COST SHALL BE INCLUDED WITH TRAFFIC CONTROL STANDARD 701316.

THE FINAL LOCATION OF ALL TRAFFIC CONTROL ITEMS SHALL BE VERIFIED BY THE ENGINEER.

MEDIAN WORK SHALL BE PERFORMED UNDER STANDARD 701201

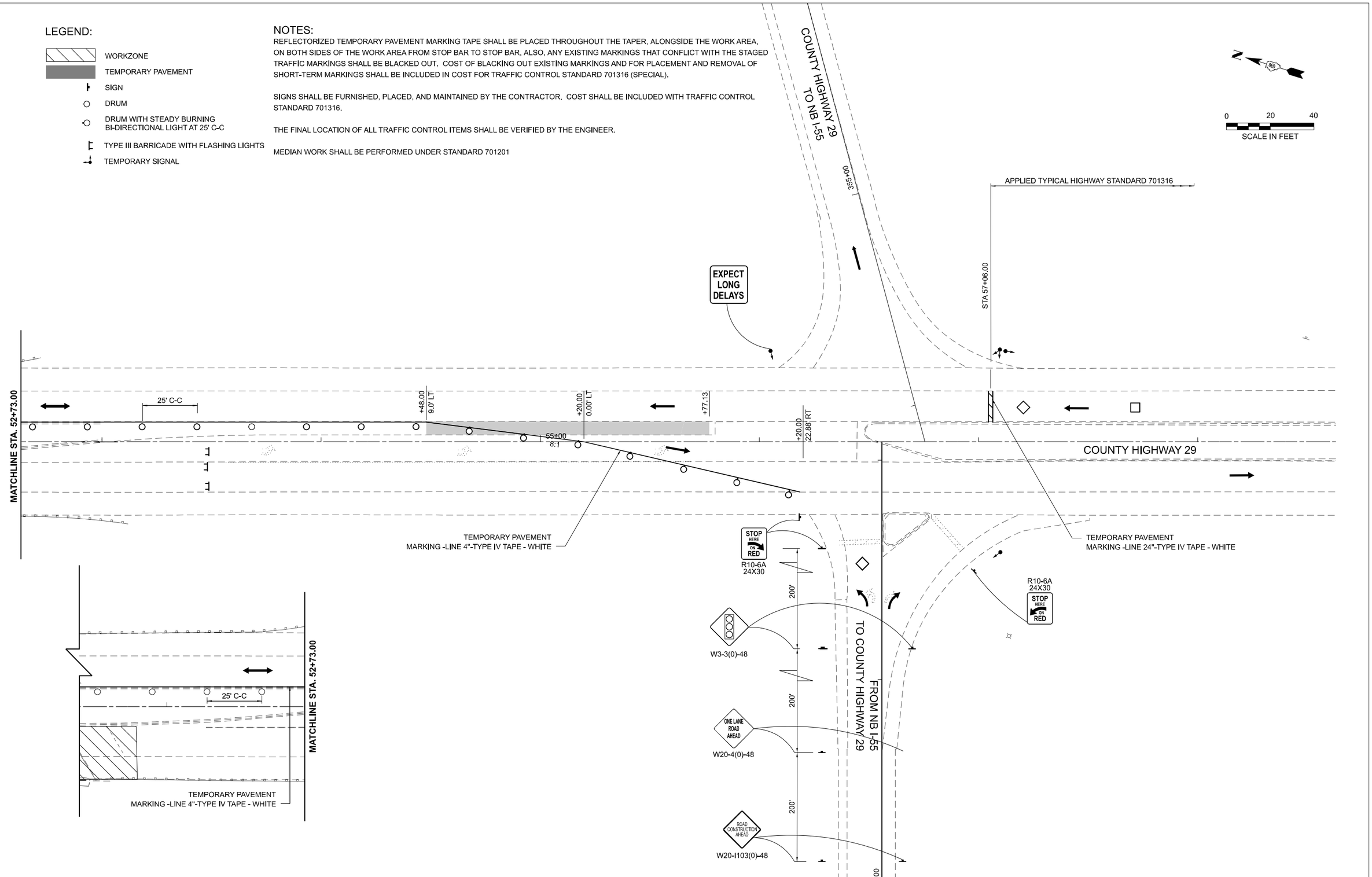

HWY 29 stage 2 - Sht 2 [Sheet]
D57DF37-AKOT container.dgn

AMES Engineering, Inc. CONSULTING ENGINEERS 6330 Belmont Road, Suite 4B Downers Grove, IL 60516	USER NAME = MSomer	DESIGNED - JAR	REVISED -	STATE OF ILLINOIS DEPARTMENT OF TRANSPORTATION	MAINTENANCE OF TRAFFIC COUNTY HIGHWAY 29 - STAGE 2	F.A.I RTE.	SECTION	COUNTY	TOTAL SHEETS / SHEET NO.
		DRAWN - MA	REVISED -			55	(57-3) BR	McLEAN	126 / 41
		CHECKED - AS	REVISED -					CONTRACT NO. 70F37	
	PLOT DATE =10/22/2025	DATE - 05-08-25	REVISED -		SCALE: 1"=20' SHEET OF SHEETS STA. 51+53.00 TO STA. 59+00.00			ILLINOIS FED. AID PROJECT	

LEGEND

- ◊ MONODIRECTIONAL REFLECTOR, TYPE C
- ○ MONODIRECTIONAL BURNING LIGHTS AND VERTICAL PANELS
- WORKZONE
- STAGING SIGN
- ARROW BOARD

- (A) NOT USE
- (B) TAPE TYPE IV - 4", WHITE
- (C) TAPE TYPE IV - 4", YELLOW
- (D) TEMPORARY CONCRETE BARRIER
- (E) ATTENUATOR TYPE 3, NARROW
- (F) RELOCATE TEMP CONC BARRIER
- (G) RELOCATE ATTENUATOR TYPE 3 NARROW
- (H) PAVED SHOULDER REMOVAL REPLACED WITH HMA SHOULDER, 3.25" AND SHOULDER RUMBLE STRIP 16" AND HMA SURFACE REMOVAL (SEE ROADWAY AND REMOVAL PLAN FOR LIMITS)

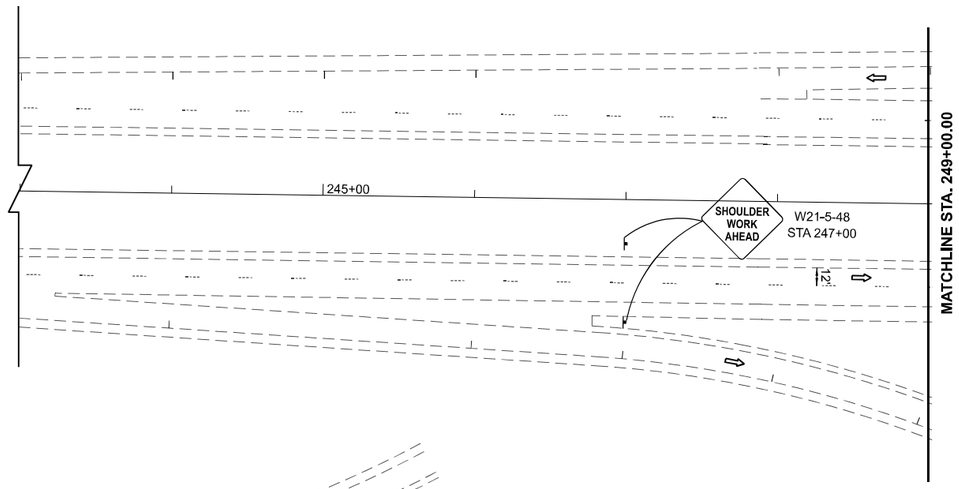

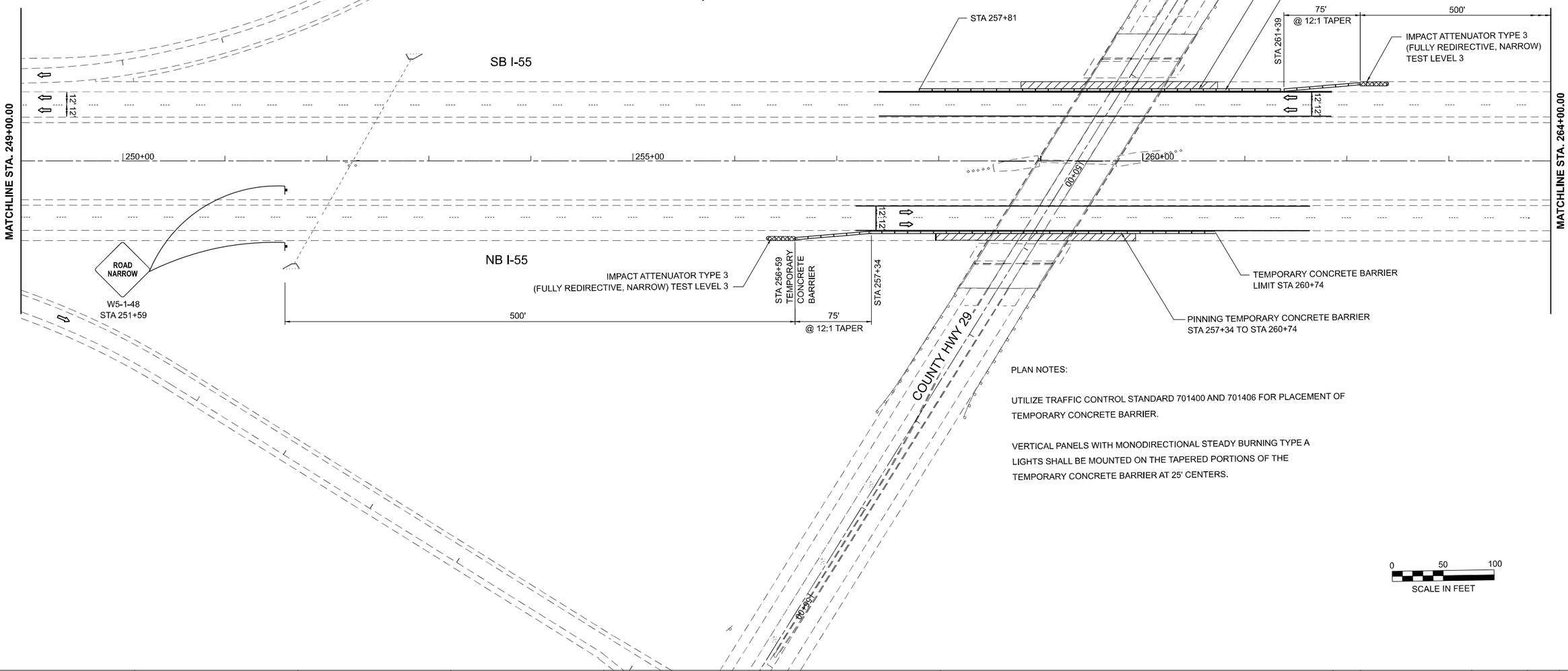

PLAN NOTES:

UTILIZE TRAFFIC CONTROL STANDARD 701400 AND 701406 FOR PLACEMENT OF TEMPORARY CONCRETE BARRIER.

VERTICAL PANELS WITH MONODIRECTIONAL STEADY BURNING TYPE A LIGHTS SHALL BE MOUNTED ON THE TAPERED PORTIONS OF THE TEMPORARY CONCRETE BARRIER AT 25' CENTERS.

I55 STG1-Plan 2 [Sheet]
D57OF37-MOT container.dgn

AMES Engineering, Inc.
CONSULTING ENGINEERS
6330 Belmont Road, Suite 4B
Downers Grove, IL 60516

USER NAME = MSomer	DESIGNED - JAR	REVISED -	
	DRAWN - MA	REVISED -	
	CHECKED - AS	REVISED -	
PLOT DATE =10/22/2025	DATE - 05-08-25	REVISED -	

STATE OF ILLINOIS
DEPARTMENT OF TRANSPORTATION

DETAIL OF TRAFFIC CONTROL AND PROTECTION (SPECIAL)
INTERSTATE 55 AT CH29

SCALE: 1"=50' | SHEET OF SHEETS | STA. 249+00.00 R2 TO STA. 264+00.00 R2

F.A.I RTE.	SECTION	COUNTY	TOTAL SHEETS	SHEET NO.
55	(57-3) BR	McLEAN	126	42
		CONTRACT NO. 70F37		
	ILLINOIS	FED. AID PROJECT		

LEGEND

- MONODIRECTIONAL REFLECTOR, TYPE C
- MONODIRECTIONAL BURNING LIGHTS AND VERTICAL PANELS
- WORKZONE
- STAGING SIGN
- ARROW BOARD

- (A) NOT USE
- (B) TAPE TYPE IV - 4", WHITE
- (C) TAPE TYPE IV - 4", YELLOW
- (D) TEMPORARY CONCRETE BARRIER
- (E) ATTENUATOR TYPE 3, NARROW
- (F) RELOCATE TEMP CONC BARRIER
- (G) RELOCATE ATTENUATOR TYPE 3 NARROW
- (H) PAVED SHOULDER REMOVAL REPLACED WITH HMA SHOULDER, 3.25" AND SHOULDER RUMBLE STRIP 16" AND HMA SURFACE REMOVAL (SEE ROADWAY AND REMOVAL PLAN FOR LIMITS)

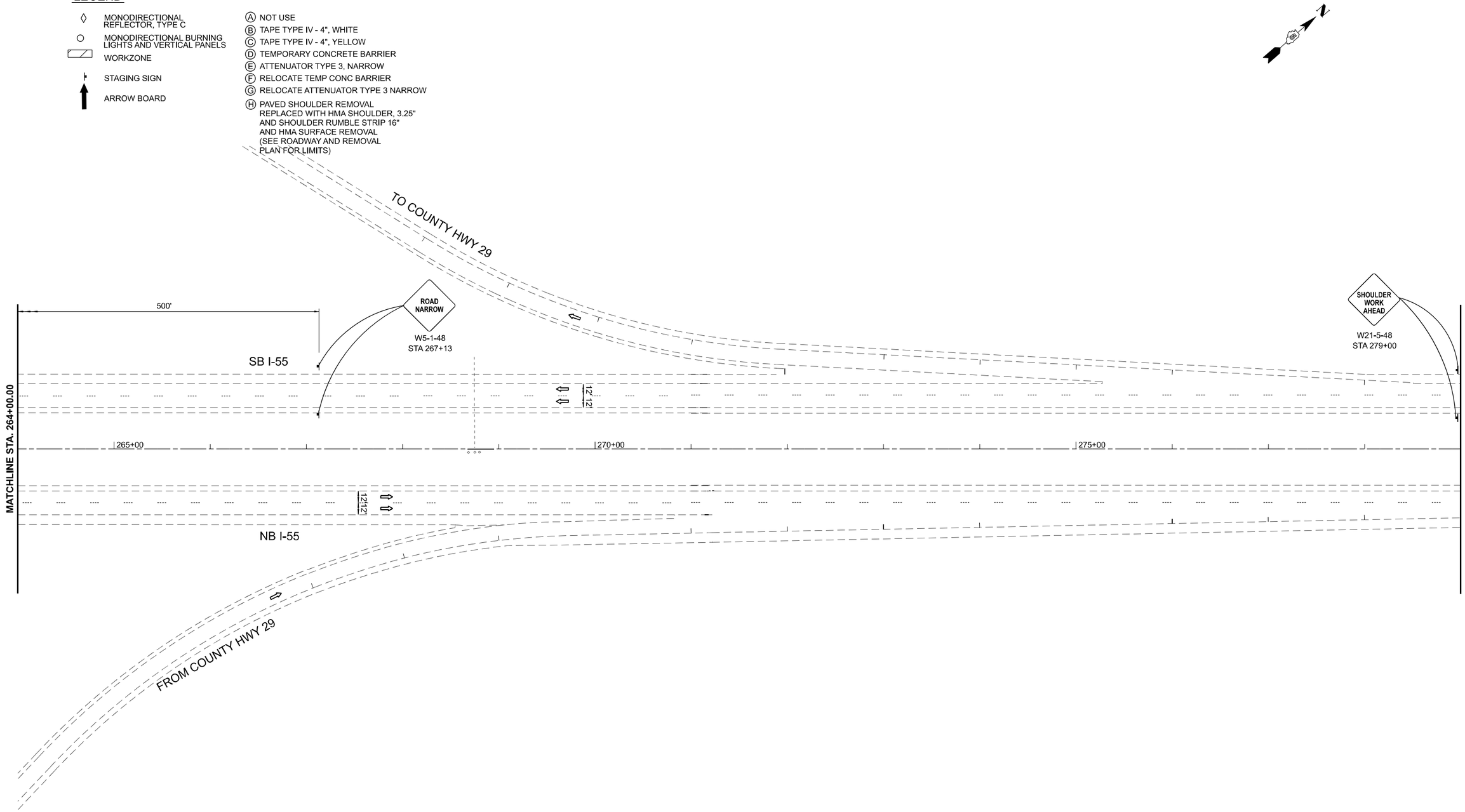

0 50 100
SCALE IN FEET

I55 STG1-Plan 3 [Sheet]
D5/0F37-MOT container.dgn

AMES Engineering, Inc. CONSULTING ENGINEERS 6330 Belmont Road, Suite 4B Downers Grove, IL 60516	USER NAME = MSomer	DESIGNED - JAR	REVISED -	STATE OF ILLINOIS DEPARTMENT OF TRANSPORTATION	DETAIL OF TRAFFIC CONTROL AND PROTECTION (SPECIAL) INTERSTATE 55 AT CH29	F.A.I RTE.	SECTION	COUNTY	TOTAL SHEETS	SHEET NO.
		DRAWN - MA	REVISED -			55	(57-3) BR	McLEAN	126	43
		CHECKED - AS	REVISED -					CONTRACT NO. 70F37		
	PLOT DATE =10/22/2025	DATE - 05-08-25	REVISED -		SCALE: 1"=50' SHEET OF SHEETS STA. 264+00.00 R2 TO STA. 287+00.00 R2		ILLINOIS	FED. AID PROJECT		

NOTE:

1. ADVANCE SIGN ARRAY AS PER STANDARD 701400

LEGEND

- Ⓐ NOT USED
- Ⓑ TAPE TYPE IV - 4", WHITE
- Ⓒ TAPE TYPE IV - 4", YELLOW
- Ⓓ TEMPORARY CONCRETE BARRIER
- Ⓔ ATTENUATOR TYPE 3, NARROW
- Ⓕ RELOCATE TEMP CONC BARRIER
- Ⓖ NOT USE
- POST MOUNTED VERTICAL PANELS AT 50' C-C
- DIRECTIONAL INDICATOR BARRICADE W/ STEADY BURN MONODIRECTIONAL LIGHT
- DRUM W/ STEADY BURN BI-DIRECTIONAL LIGHT
- WORKZONE
- STAGING SIGN
- Ⓗ PAVED SHOULDER REMOVAL REPLACED WITH HMA SHOULDER, 3.25" AND SHOULDER RUMBLE STRIP 16" AND HMA SURFACE REMOVAL (SEE ROADWAY AND REMOVAL PLAN FOR LIMITS)
- Ⓘ TAPE TYPE IV - 8", WHITE
- Ⓙ TAPE TYPE IV-8" YELLOW
- Ⓚ PINNING TEMP CONC BAR

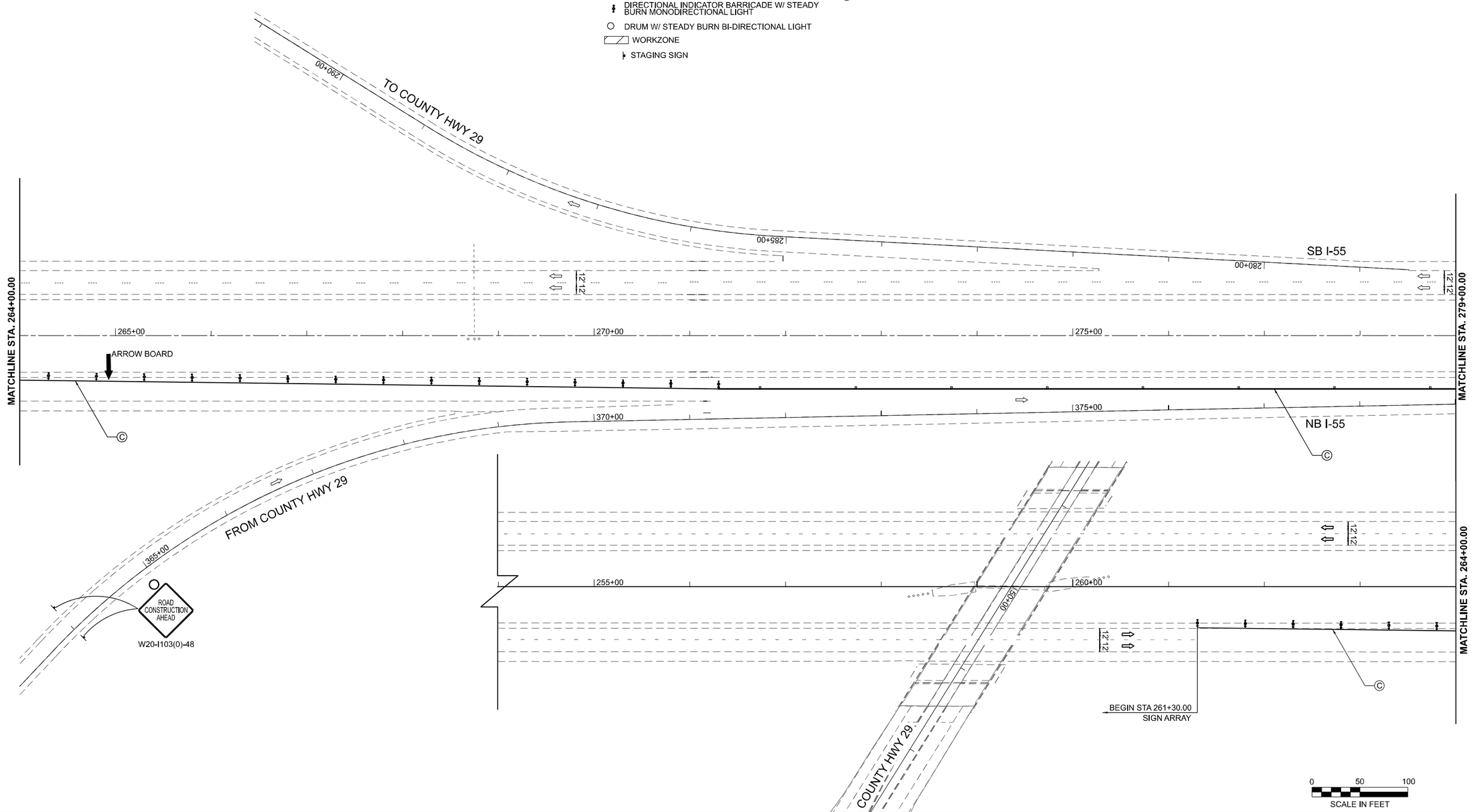

I55 STG2-Plan 3 [Sheet]
D5/70F37-MOT container.dgn

AMES Engineering, Inc. CONSULTING ENGINEERS 6330 Belmont Road, Suite 4B Downers Grove, IL 60516	USER NAME = MSomer	DESIGNED - JAR	REVISED -	STATE OF ILLINOIS DEPARTMENT OF TRANSPORTATION	MAINTENANCE OF TRAFFIC INTERSTATE 55 AT MONEY CREEK- STAGE 1	F.A.I RTE.	SECTION	COUNTY	TOTAL SHEETS / SHEET NO.
		DRAWN - MA	REVISED -			55	(57-3) BR	McLEAN	126 / 44
		CHECKED - AS	REVISED -					CONTRACT NO. 70F37	
	PLOT DATE =10/22/2025	DATE - 05-08-25	REVISED -		SCALE: 1"=50' SHEET OF SHEETS STA. 264+00.00 R2 TO STA. 279+00.00 R2		ILLINOIS	FED. AID PROJECT	

LEGEND

- Ⓐ NOT USED
- Ⓑ TAPE TYPE IV - 4", WHITE
- Ⓒ TAPE TYPE IV - 4", YELLOW
- Ⓓ TEMPORARY CONCRETE BARRIER
- Ⓔ ATTENUATOR TYPE 3, NARROW
- Ⓕ RELOCATE TEMP CONC BARRIER
- Ⓖ NOT USE
- POST MOUNTED VERTICAL PANELS AT 50' C-C
- DIRECTIONAL INDICATOR BARRICADE W/ STEADY BURN MONODIRECTIONAL LIGHT
- DRUM W/ STEADY BURN BI-DIRECTIONAL LIGHT
- WORKZONE
- STAGING SIGN
- Ⓗ PAVED SHOULDER REMOVAL REPLACED WITH HMA SHOULDER, 3.25" AND SHOULDER RUMBLE STRIP 16" AND HMA SURFACE REMOVAL (SEE ROADWAY AND REMOVAL PLAN FOR LIMITS)
- Ⓘ TAPE TYPE IV - 8", WHITE
- Ⓙ TAPE TYPE IV-8" YELLOW
- Ⓚ PINNING TEMP CONC BAR

N

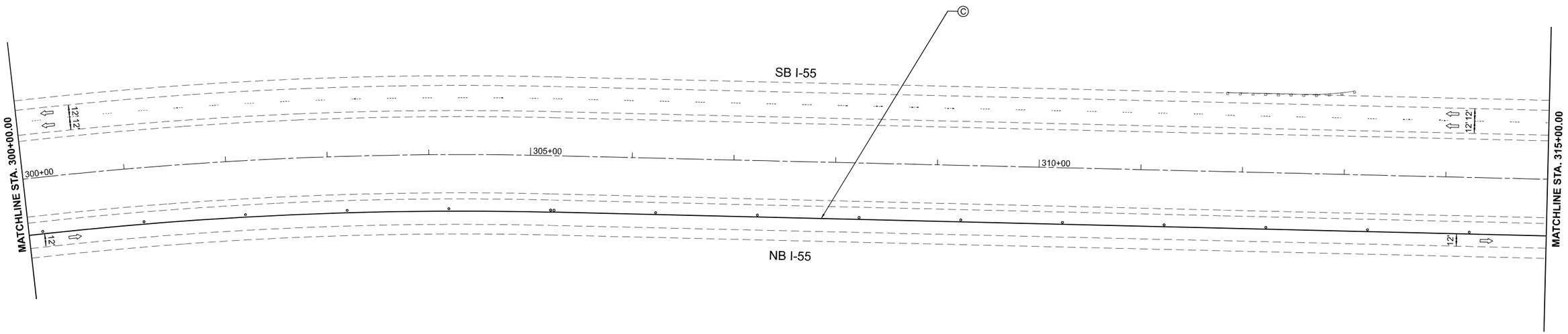

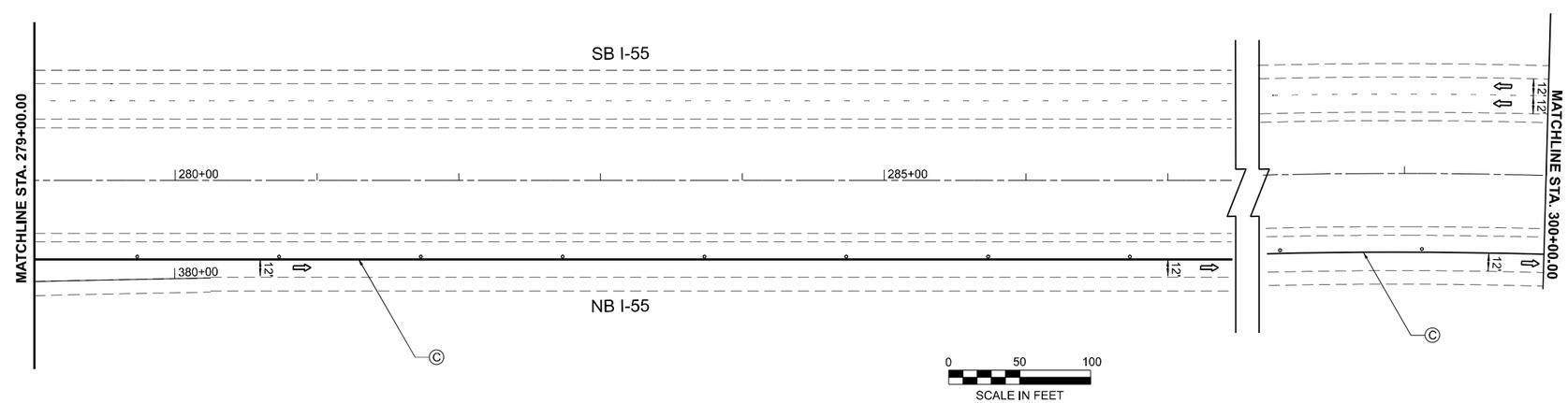

I55 STG2-Plan 4 [Sheet]
D570F37-MOT container.dgn

AMES Engineering, Inc.
CONSULTING ENGINEERS
6330 Belmont Road, Suite 4B
Downers Grove, IL 60516

USER NAME = MSomer	DESIGNED - JAR	REVISED -	
	DRAWN - MA	REVISED -	
	CHECKED - AS	REVISED -	
PLOT DATE =10/22/2025	DATE - 05-08-25	REVISED -	

STATE OF ILLINOIS
DEPARTMENT OF TRANSPORTATION

MAINTENANCE OF TRAFFIC
INTERSTATE 55 AT MONEY CREEK- STAGE 1

SCALE: | SHEET OF SHEETS | STA. 300+00.00 R2 TO STA. 315+00.00 R2

F.A.I RTE.	SECTION	COUNTY	TOTAL SHEETS	SHEET NO.
55	(57-3) BR	McLEAN	126	45
		CONTRACT NO. 70F37		
	ILLINOIS	FED. AID PROJECT		

LEGEND

- (A) NOT USED
- (B) TAPE TYPE IV - 4", WHITE
- (C) TAPE TYPE IV - 4", YELLOW
- (D) TEMPORARY CONCRETE BARRIER
- (E) ATTENUATOR TYPE 3, NARROW
- (F) RELOCATE TEMP CONC BARRIER
- (G) NOT USE
- POST MOUNTED VERTICAL PANELS AT 50' C-C
- DIRECTIONAL INDICATOR BARRICADE W/ STEADY BURN MONODIRECTIONAL LIGHT
- DRUM W/ STEADY BURN BI-DIRECTIONAL LIGHT
- WORKZONE
- STAGING SIGN
- (H) PAVED SHOULDER REMOVAL REPLACED WITH HMA SHOULDER, 3.25" AND SHOULDER RUMBLE STRIP 16" AND HMA SURFACE REMOVAL (SEE ROADWAY AND REMOVAL PLAN FOR LIMITS)
- (I) TAPE TYPE IV - 8", WHITE
- (J) TAPE TYPE IV-8" YELLOW
- (K) PINNING TEMP CONC BAR

N

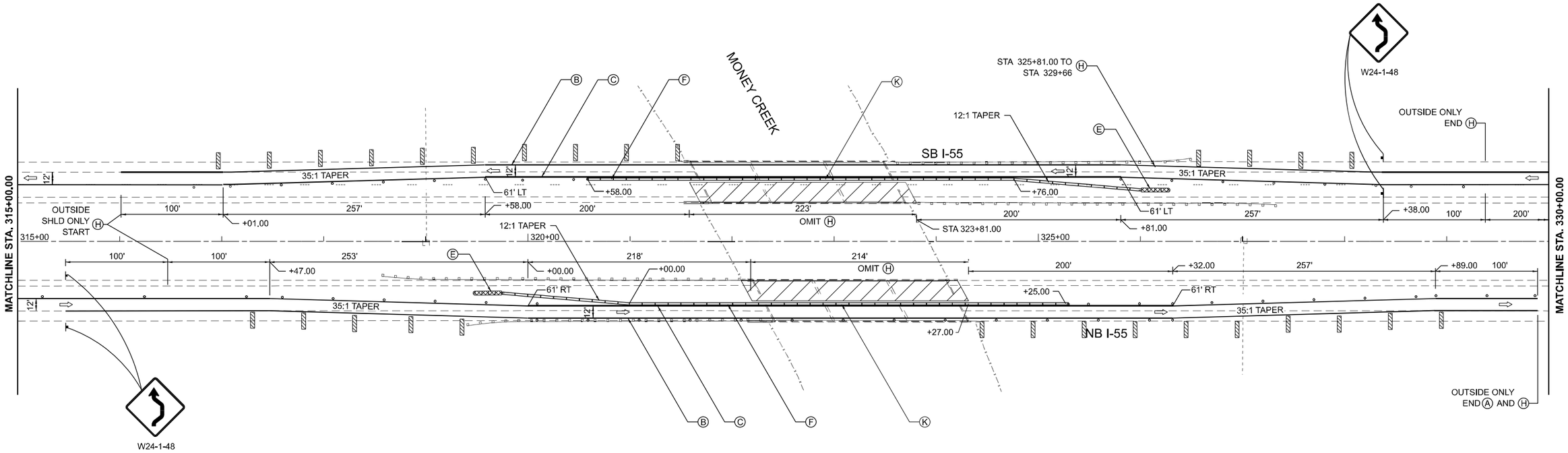

0 50 100
SCALE IN FEET

I55 STG2-Plan 5 [Sheet]
DS70F37-MOT container.dgn

AMES Engineering, Inc.
CONSULTING ENGINEERS
6330 Belmont Road, Suite 4B
Downers Grove, IL 60516

USER NAME = MSomer	DESIGNED - JAR	REVISED -	
	DRAWN - MA	REVISED -	
	CHECKED - AS	REVISED -	
PLOT DATE =10/22/2025	DATE - 05-08-25	REVISED -	

STATE OF ILLINOIS
DEPARTMENT OF TRANSPORTATION

MAINTENANCE OF TRAFFIC
INTERSTATE 55 AT MONEY CREEK- STAGE 1

SCALE: 1"=50' | SHEET OF SHEETS | STA. 315+00.00 R2 TO STA. 330+00.00 R2

F.A.I RTE.	SECTION	COUNTY	TOTAL SHEETS	SHEET NO.
55	(57-3) BR	McLEAN	126	46
		CONTRACT NO. 70F37		
	ILLINOIS	FED. AID PROJECT		

NOTE:

1. ADVANCE SIGN ARRAY AS PER STANDARD 701400

LEGEND

- (A) NOT USED
- (B) TAPE TYPE IV - 4", WHITE
- (C) TAPE TYPE IV - 4", YELLOW
- (D) TEMPORARY CONCRETE BARRIER
- (E) ATTENUATOR TYPE 3, NARROW
- (F) RELOCATE TEMP CONC BARRIER
- (G) NOT USE
- POST MOUNTED VERTICAL PANELS AT 50' C-C
- DIRECTIONAL INDICATOR BARRICADE W/ STEADY BURN MONODIRECTIONAL LIGHT
- DRUM W/ STEADY BURN BI-DIRECTIONAL LIGHT
- WORKZONE
- STAGING SIGN
- (H) PAVED SHOULDER REMOVAL REPLACED WITH HMA SHOULDER, 3.25" AND SHOULDER RUMBLE STRIP 16" AND HMA SURFACE REMOVAL (SEE ROADWAY AND REMOVAL PLAN FOR LIMITS)
- (I) TAPE TYPE IV - 8", WHITE
- (J) TAPE TYPE IV-8" YELLOW
- (K) PINNING TEMP CONC BAR

N

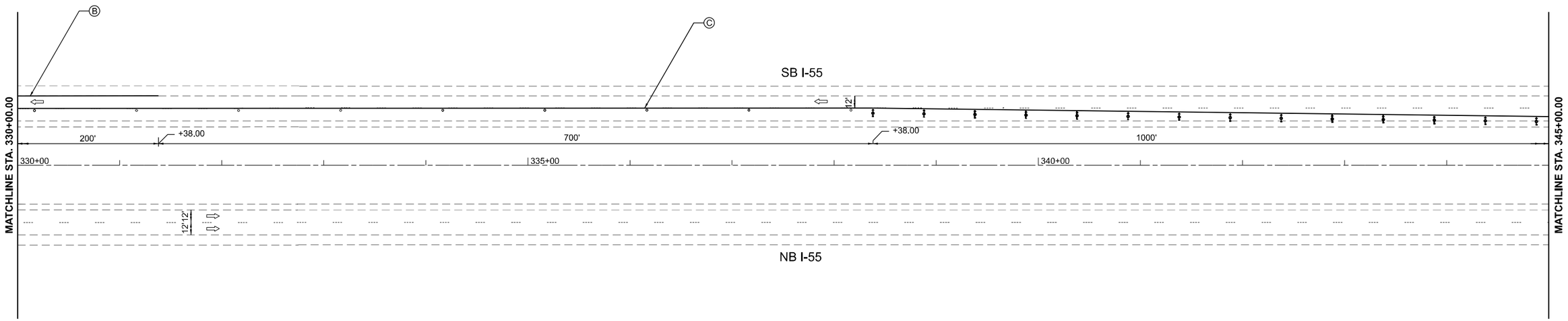

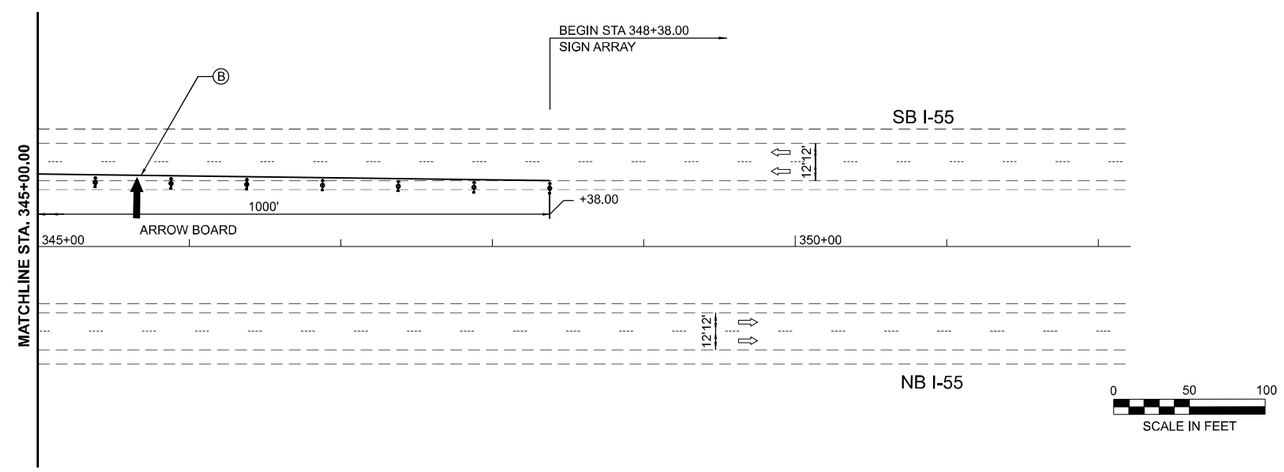

I55 STG2-Plan 6 [Sheet]
DS70F37-WOT container.dgn

AMES Engineering, Inc. CONSULTING ENGINEERS 6330 Belmont Road, Suite 4B Downers Grove, IL 60516	USER NAME = MSomer	DESIGNED - JAR	REVISED -	STATE OF ILLINOIS DEPARTMENT OF TRANSPORTATION	MAINTENANCE OF TRAFFIC INTERSTATE 55 AT MONEY CREEK- STAGE 1	F.A.I RTE.	SECTION	COUNTY	TOTAL SHEETS / SHEET NO.
		DRAWN - MA	REVISED -			55	(57-3) BR	McLEAN	126 / 47
		CHECKED - AS	REVISED -					CONTRACT NO. 70F37	
	PLOT DATE =10/22/2025	DATE - 05-08-25	REVISED -		SCALE: 1"=50' SHEET OF SHEETS STA. 330+00.00 R2 TO STA. 345+00.00 R2		ILLINOIS	FED. AID PROJECT	

LEGEND

- Ⓐ NOT USED
- Ⓑ TAPE TYPE IV - 4", WHITE
- Ⓒ TAPE TYPE IV - 4", YELLOW
- Ⓓ TEMPORARY CONCRETE BARRIER
- Ⓔ ATTENUATOR TYPE 3, NARROW
- Ⓕ RELOCATE TEMP CONC BARRIER
- Ⓖ NOT USE
- POST MOUNTED VERTICAL PANELS AT 50' C-C
- DIRECTIONAL INDICATOR BARRICADE W/ STEADY BURN MONODIRECTIONAL LIGHT
- DRUM W/ STEADY BURN BI-DIRECTIONAL LIGHT
- WORKZONE
- STAGING SIGN
- Ⓗ PAVED SHOULDER REMOVAL REPLACED WITH HMA SHOULDER, 3.25" AND SHOULDER RUMBLE STRIP 16" AND HMA SURFACE REMOVAL (SEE ROADWAY AND REMOVAL PLAN FOR LIMITS)
- Ⓘ TAPE TYPE IV - 8", WHITE
- Ⓙ TAPE TYPE IV-8" YELLOW
- Ⓚ PINNING TEMP CONC BAR

N

0 50 100
SCALE IN FEET

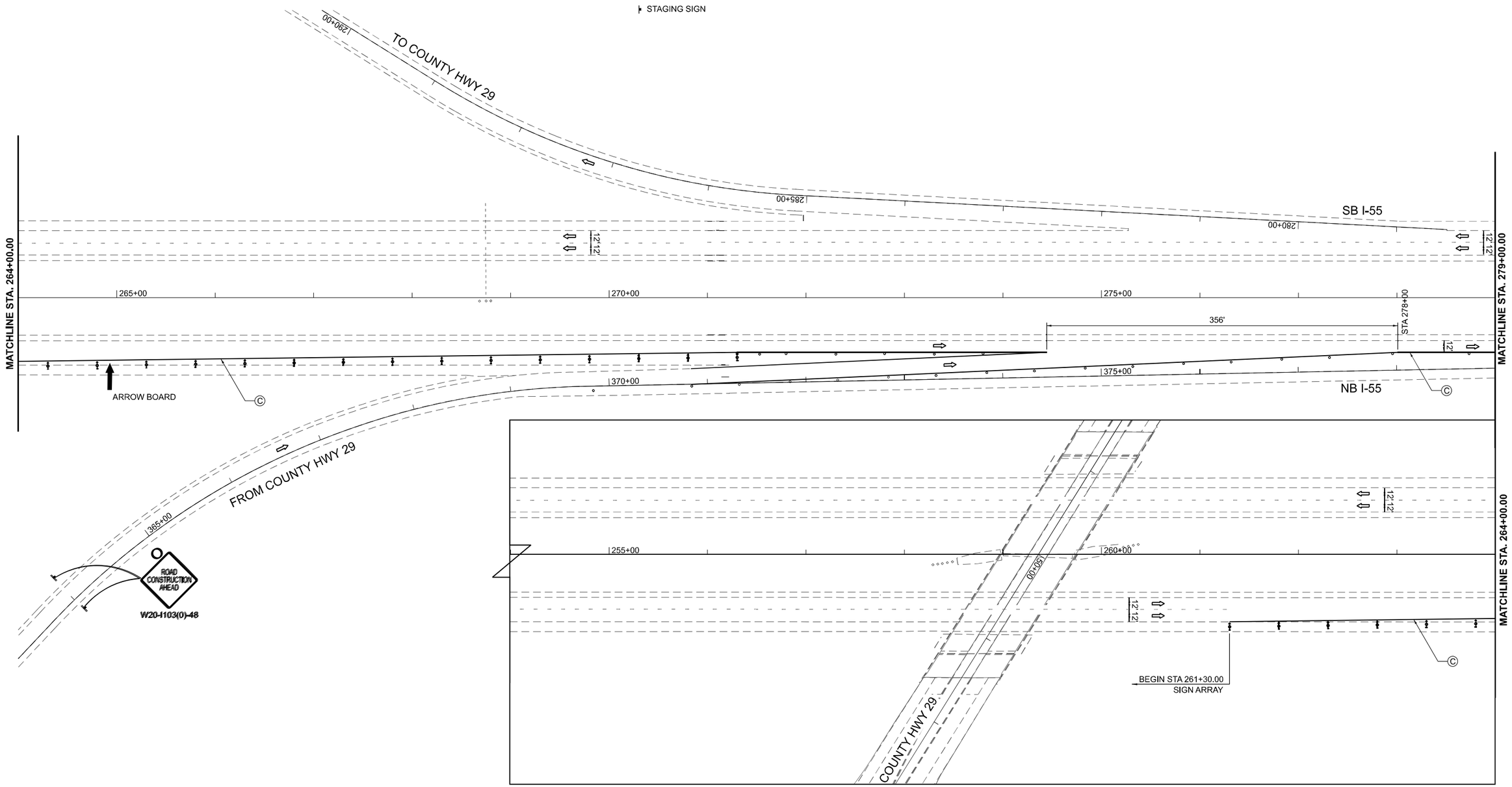

I55 STG1-Plan 3A [Sheet]
D570F37-MOT contailner.dgn

AMES Engineering, Inc. CONSULTING ENGINEERS 6330 Belmont Road, Suite 4B Downers Grove, IL 60516	USER NAME = MSomer	DESIGNED - JAR	REVISED -	STATE OF ILLINOIS DEPARTMENT OF TRANSPORTATION	MAINTENANCE OF TRAFFIC INTERSTATE 55 AT MONEY CREEK- STAGE 2	F.A.I RTE.	SECTION	COUNTY	TOTAL SHEETS / SHEET NO.
		DRAWN - MA	REVISED -			55	(57-3) BR	McLEAN	126 / 48
		CHECKED - AS	REVISED -					CONTRACT NO. 70F37	
	PLOT DATE =10/22/2025	DATE - 05-08-25	REVISED -		SCALE: SHEET OF SHEETS STA. 264+00.00 R2 TO STA. 279+00.00 R2		ILLINOIS	FED. AID PROJECT	

NOTE:

1. ADVANCE SIGN ARRAY AS PER STANDARD 701400

LEGEND

- MONODIRECTIONAL REFLECTOR, TYPE C
- MONODIRECTIONAL BURNING LIGHTS AND VERTICAL PANELS
- WORKZONE
- STAGING SIGN
- ARROW BOARD

- (A) NOT USE
- (B) TAPE TYPE IV - 4", WHITE
- (C) TAPE TYPE IV - 4", YELLOW
- (D) TEMPORARY CONCRETE BARRIER
- (E) ATTENUATOR TYPE 3, NARROW
- (F) RELOCATE TEMP CONC BARRIER
- (G) RELOCATE ATTENUATOR TYPE 3 NARROW
- (H) PAVED SHOULDER REMOVAL REPLACED WITH HMA SHOULDER, 3.25" AND SHOULDER RUMBLE STRIP 16" AND HMA SURFACE REMOVAL (SEE ROADWAY AND REMOVAL PLAN FOR LIMITS)
- (I) TAPE TYPE IV - 8", WHITE
- (J) TAPE TYPE IV - 8", YELLOW
- (K) PINNING TEMP CONC BAR

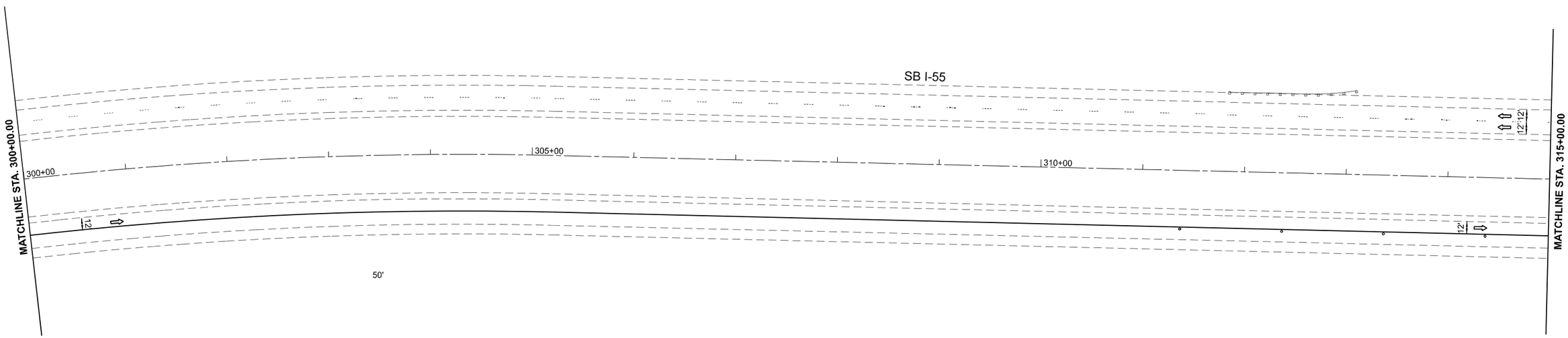

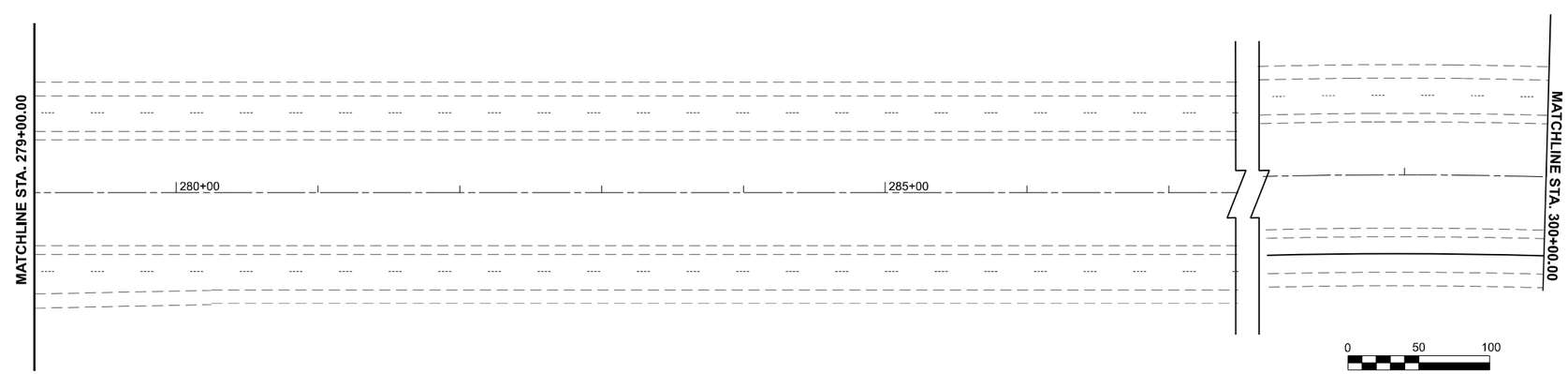

0 50 100
SCALE IN FEET

I55 STG1-Plan 4 [Sheet]
D570F37-MOT contalrier.dgn

AMES Engineering, Inc.
CONSULTING ENGINEERS
6330 Belmont Road, Suite 4B
Downers Grove, IL 60516

USER NAME = MSomer	DESIGNED - JAR	REVISED -	
	DRAWN - MA	REVISED -	
	CHECKED - AS	REVISED -	
PLOT DATE =10/22/2025	DATE - 05-08-25	REVISED -	

STATE OF ILLINOIS
DEPARTMENT OF TRANSPORTATION

MAINTENANCE OF TRAFFIC
INTERSTATE 55 AT MONEY CREEK- STAGE 2

SCALE: 1"=50' | SHEET OF SHEETS | STA. 300+00.00 R2 TO STA. 315+00.00 R2

F.A.I RTE.	SECTION	COUNTY	TOTAL SHEETS	SHEET NO.
55	(57-3) BR	McLEAN	126	49
		CONTRACT NO. 70F37		
		ILLINOIS	FED. AID PROJECT	

LEGEND

- MONODIRECTIONAL REFLECTOR, TYPE C
- MONODIRECTIONAL BURNING LIGHTS AND VERTICAL PANELS
- WORKZONE
- STAGING SIGN
- ARROW BOARD

- (A) NOT USE
- (B) TAPE TYPE IV - 4", WHITE
- (C) TAPE TYPE IV - 4", YELLOW
- (D) TEMPORARY CONCRETE BARRIER
- (E) ATTENUATOR TYPE 3, NARROW
- (F) RELOCATE TEMP CONC BARRIER
- (G) RELOCATE ATTENUATOR TYPE 3 NARROW
- (H) PAVED SHOULDER REMOVAL REPLACED WITH HMA SHOULDER, 3.25" AND SHOULDER RUMBLE STRIP 16" AND HMA SURFACE REMOVAL (SEE ROADWAY AND REMOVAL PLAN FOR LIMITS)
- (I) TAPE TYPE IV - 8", WHITE
- (J) TAPE TYPE IV - 8", YELLOW
- (K) PINNING TEMP CONC BAR

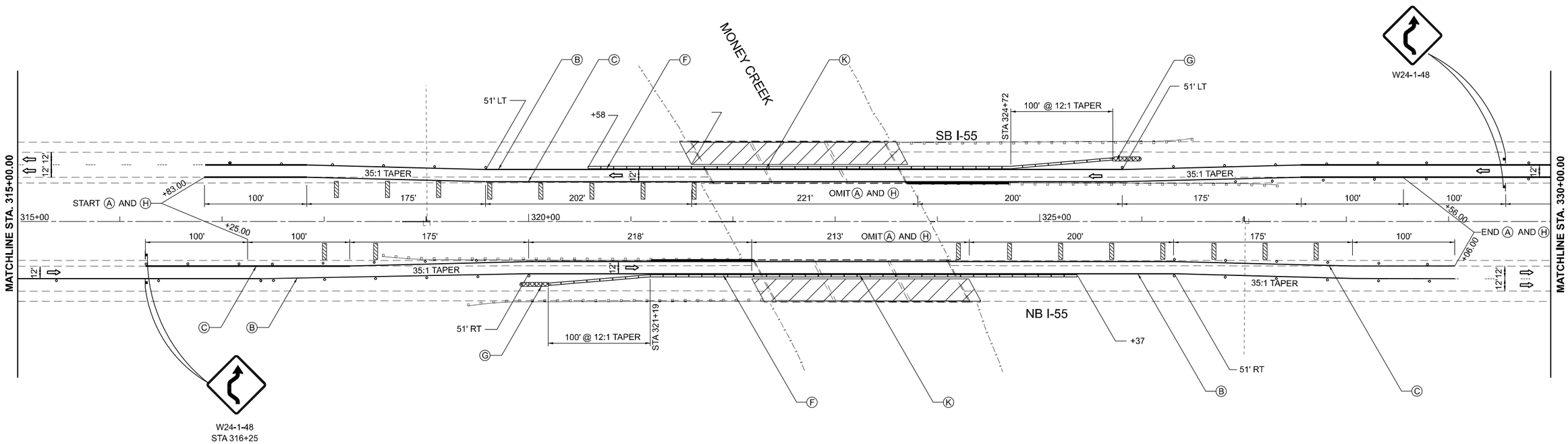

I55 STG1-Plan 5 [Sheet]
D5/0F37-MOT container.dgn

AMES Engineering, Inc. CONSULTING ENGINEERS 6330 Belmont Road, Suite 4B Downers Grove, IL 60516	USER NAME = MSomer	DESIGNED - JAR	REVISED -	STATE OF ILLINOIS DEPARTMENT OF TRANSPORTATION	MAINTENANCE OF TRAFFIC INTERSTATE 55 AT MONEY CREEK- STAGE 2	F.A.I RTE.	SECTION	COUNTY	TOTAL SHEETS	SHEET NO.
		DRAWN - MA	REVISED -			55	(57-3) BR	McLEAN	126	50
		CHECKED - AS	REVISED -					CONTRACT NO. 70F37		
	PLOT DATE =10/22/2025	DATE - 05-08-25	REVISED -		SCALE: 1"=50' SHEET OF SHEETS STA. 315+00.00 R2 TO STA. 330+00.00 R2		ILLINOIS	FED. AID PROJECT		

NOTE:

1. ADVANCE SIGN ARRAY AS PER STANDARD 701400

LEGEND

- MONODIRECTIONAL REFLECTOR, TYPE C
- MONODIRECTIONAL BURNING LIGHTS AND VERTICAL PANELS
- WORKZONE
- STAGING SIGN
- ARROW BOARD

- (A) NOT USE
- (B) TAPE TYPE IV - 4", WHITE
- (C) TAPE TYPE IV - 4", YELLOW
- (D) TEMPORARY CONCRETE BARRIER
- (E) ATTENUATOR TYPE 3, NARROW
- (F) RELOCATE TEMP CONC BARRIER
- (G) RELOCATE ATTENUATOR TYPE 3 NARROW
- (H) PAVED SHOULDER REMOVAL REPLACED WITH HMA SHOULDER, 3.25" AND SHOULDER RUMBLE STRIP 16" AND HMA SURFACE REMOVAL (SEE ROADWAY AND REMOVAL PLAN FOR LIMITS)
- (I) TAPE TYPE IV - 8", WHITE
- (J) TAPE TYPE IV - 8", YELLOW
- (K) PINNING TEMP CONC BAR

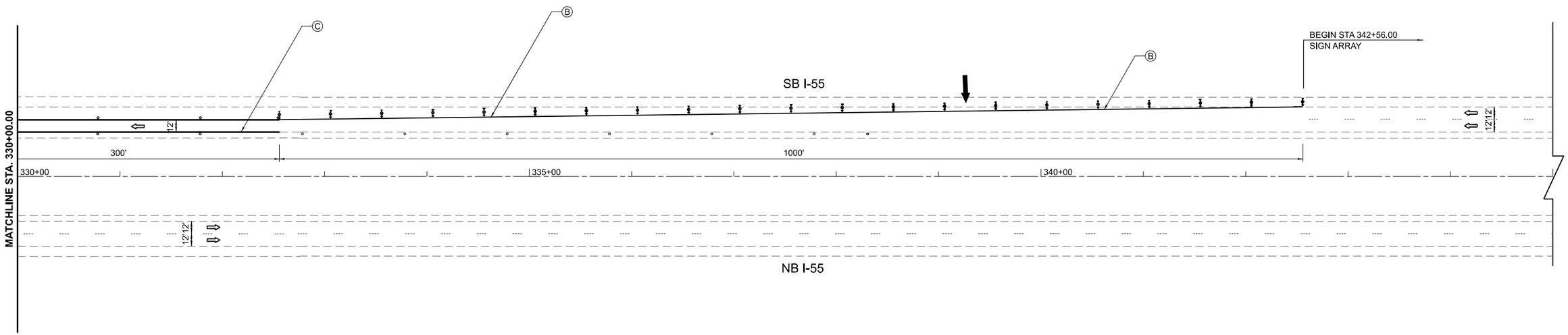

0 50 100
SCALE IN FEET

I55 STG1-Plan 6 [Sheet]
D570F37-MOT container.dgn

AMES Engineering, Inc.
CONSULTING ENGINEERS
6330 Belmont Road, Suite 4B
Downers Grove, IL 60516

USER NAME = MSomer	DESIGNED - JAR	REVISED -	
	DRAWN - MA	REVISED -	
	CHECKED - AS	REVISED -	
PLOT DATE =10/22/2025	DATE - 05-08-25	REVISED -	

STATE OF ILLINOIS
DEPARTMENT OF TRANSPORTATION

MAINTENANCE OF TRAFFIC
INTERSTATE 55 AT MONEY CREEK- STAGE 2

SCALE: 1"=50' | SHEET OF SHEETS | STA. 330+00.00 R2 TO STA. 345+00.00 R2

F.A.I RTE.	SECTION	COUNTY	TOTAL SHEETS	SHEET NO.
55	(57-3) BR	McLEAN	126	51

CONTRACT NO. 70F37

ILLINOIS | FED. AID PROJECT

LEGEND

1. POLYUREA PAVEMENT MARKING TYPE II - LETTERS AND SYMBOLS
2. POLYUREA PAVEMENT MARKING TYPE II - LINE 4", WHITE
3. POLYUREA PAVEMENT MARKING TYPE II - LINE 4", YELLOW
4. THERMOPLASTIC PAVEMENT MARKING - LETTERS AND SYMBOLS
5. THERMOPLASTIC PAVEMENT MARKING - LINE 24", WHITE

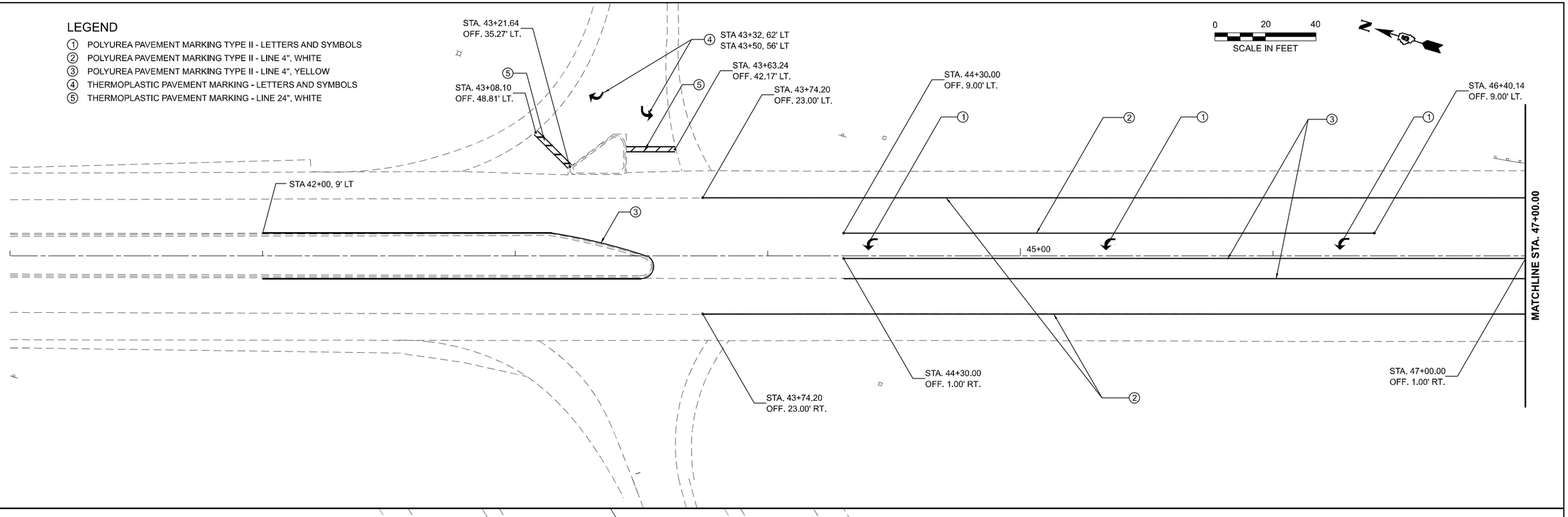

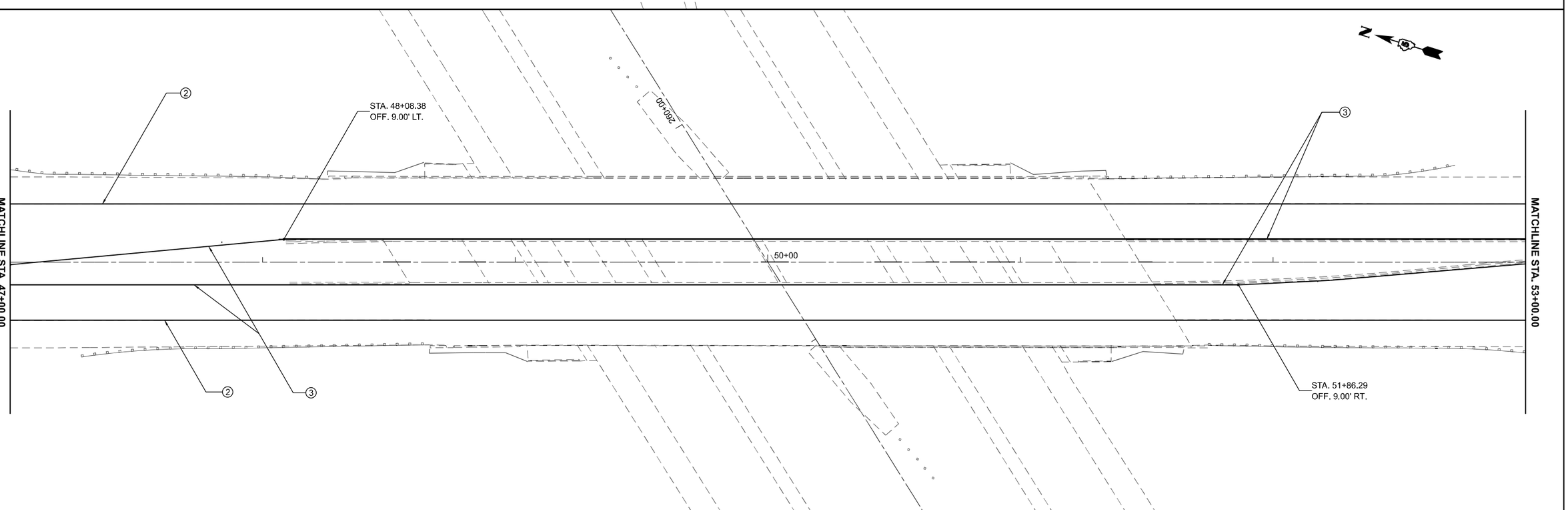

hy29 Plan 01 [Sheet]
DS70F37-pvt mk container.dgn

AMES Engineering, Inc. CONSULTING ENGINEERS 6330 Belmont Road, Suite 4B Downers Grove, IL 60516	USER NAME = MSomer	DESIGNED - JAR	REVISED -	STATE OF ILLINOIS DEPARTMENT OF TRANSPORTATION	PROPOSED PAVEMENT MARKING COUNTY HIGHWAY 29	F.A.I RTE.	SECTION	COUNTY	TOTAL SHEETS / SHEET NO.
		DRAWN - MA	REVISED -			55	(57-3) BR	McLEAN	126 / 52
		CHECKED - AS	REVISED -					CONTRACT NO. 70F37	
	PLOT DATE =10/22/2025	DATE - 05-08-25	REVISED -		SCALE: 1"=20' SHEET OF SHEETS STA. 41+00.00 TO STA. 53+00.00		ILLINOIS	FED. AID PROJECT	

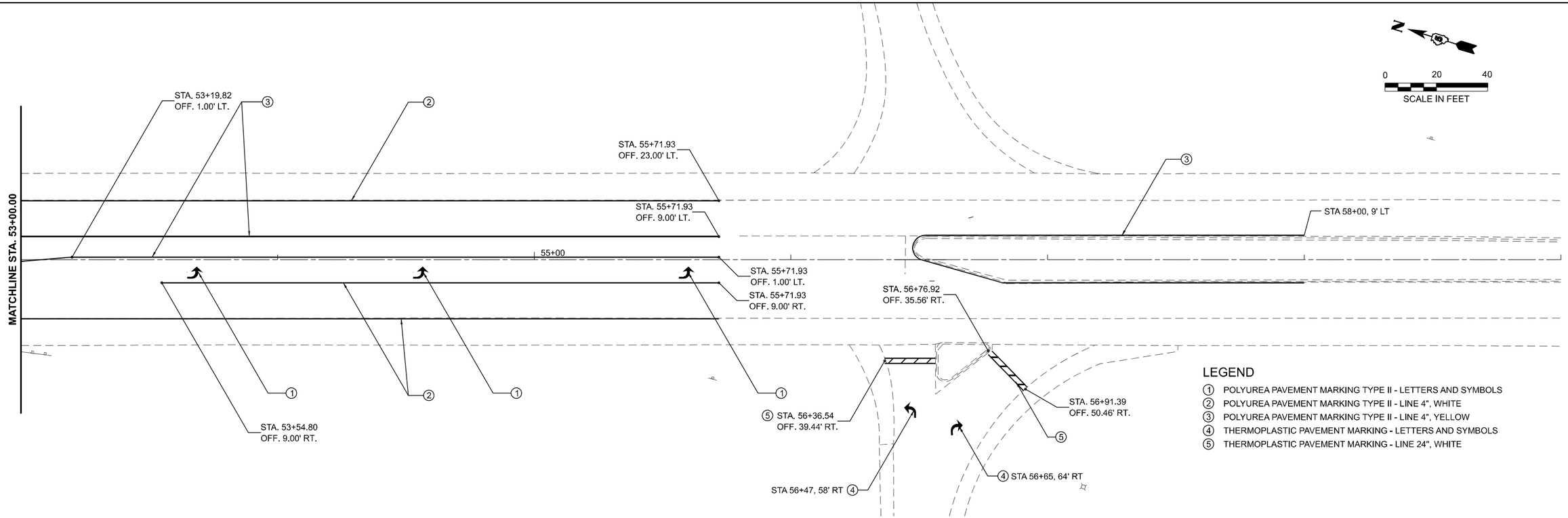

LEGEND

1. POLYUREA PAVEMENT MARKING TYPE II - LETTERS AND SYMBOLS
2. POLYUREA PAVEMENT MARKING TYPE II - LINE 4", WHITE
3. POLYUREA PAVEMENT MARKING TYPE II - LINE 4", YELLOW
4. THERMOPLASTIC PAVEMENT MARKING - LETTERS AND SYMBOLS
5. THERMOPLASTIC PAVEMENT MARKING - LINE 24", WHITE

hy29 Plan 02 [Sheet]
D5/0F37-pvt mk container.dgn

AMES Engineering, Inc.
CONSULTING ENGINEERS
6330 Belmont Road, Suite 4B
Downers Grove, IL 60516

USER NAME = MSomer	DESIGNED - JAR	REVISED -
	DRAWN - MA	REVISED -
	CHECKED - AS	REVISED -
PLOT DATE =10/22/2025	DATE - 05-08-25	REVISED -

STATE OF ILLINOIS
DEPARTMENT OF TRANSPORTATION

PROPOSED PAVEMENT MARKING
COUNTY HIGHWAY 29

SCALE: 1"=20' | SHEET OF SHEETS | STA. 53+00.00 TO STA. 59+00.00

F.A.I RTE.	SECTION	COUNTY	TOTAL SHEETS	SHEET NO.
55	(57-3) BR	McLEAN	126	53
		CONTRACT NO. 70F37		
	ILLINOIS	FED. AID PROJECT		

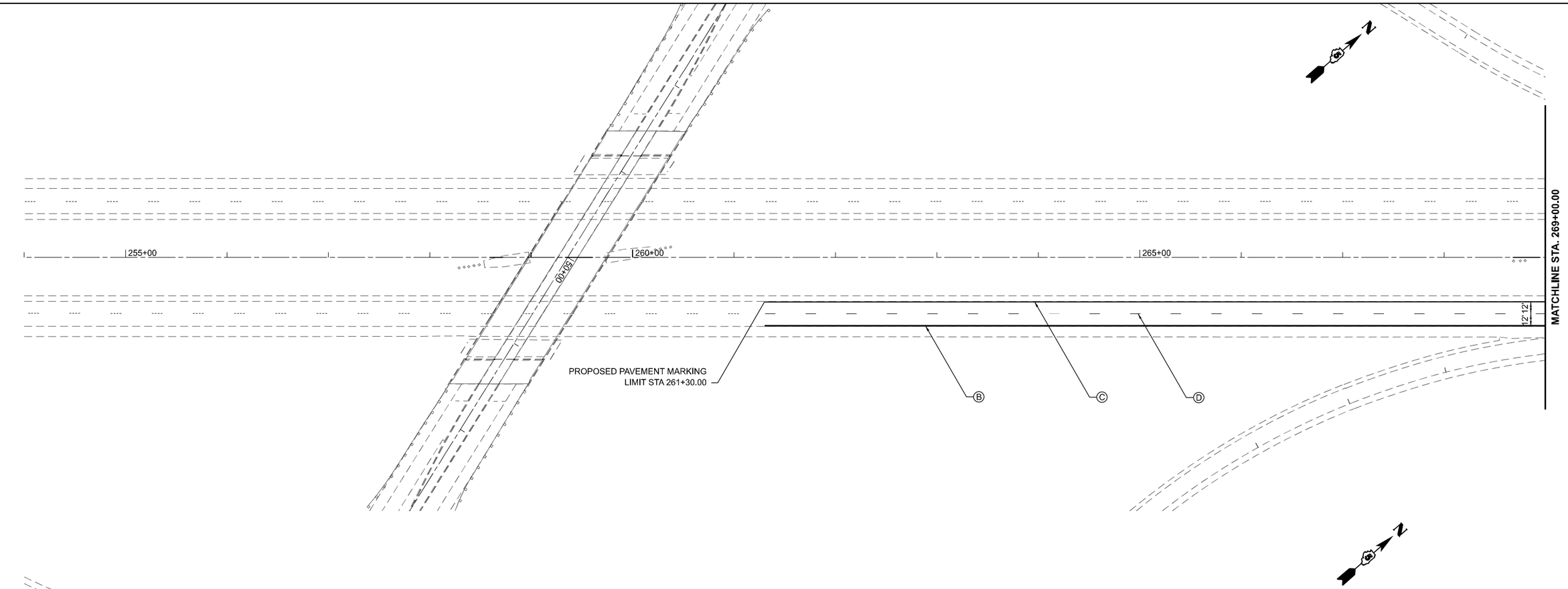

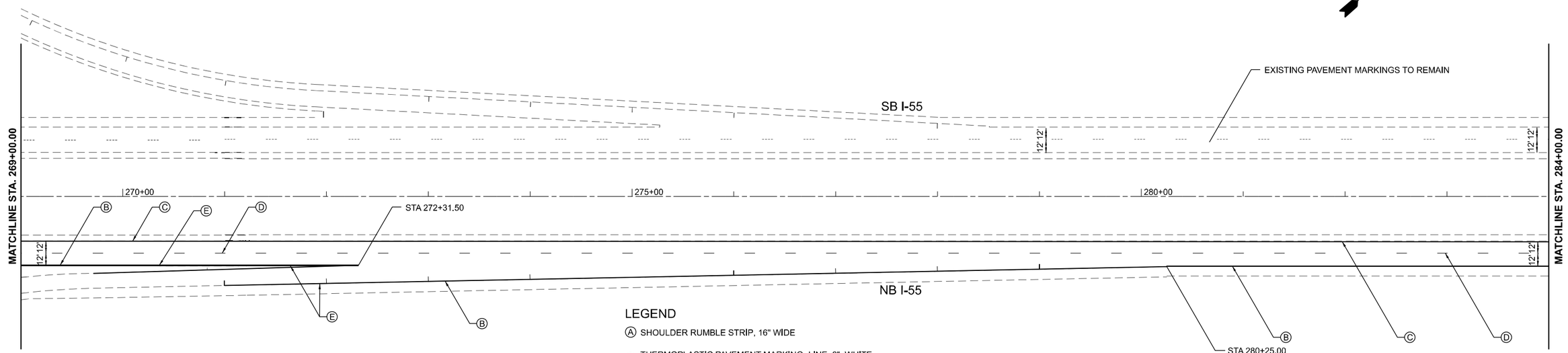

LEGEND

- (A) SHOULDER RUMBLE STRIP, 16" WIDE
- (B) THERMOPLASTIC PAVEMENT MARKING- LINE 6", WHITE GROOVING FOR RECESSED PAVEMENT MARKING, 7"
- (C) THERMOPLASTIC PAVEMENT MARKING- LINE 6", YELLOW GROOVING FOR RECESSED PAVEMENT MARKING, 7"
- (D) PREFORMED PLASTIC PAVEMENT MARKINGS, TYPE B INLAID-LINE 6, 30' SKIP- 10' DASH, WHITE GROOVING FOR RECESSED PAVEMENT MARKING, 7"
- (E) THERMOPLASTIC PAVEMENT MARKING- LINE 8", WHITE GROOVING FOR RECESSED PAVEMENT MARKING, 9"

0 50 100
SCALE IN FEET

I55_ALL - Plan 2 [Sheet 1]
D570F37-pvt mk container.dgn

AMES Engineering, Inc.
CONSULTING ENGINEERS
6330 Belmont Road, Suite 4B
Downers Grove, IL 60516

USER NAME = MSomer	DESIGNED - JAR	REVISED -	
	DRAWN - MA	REVISED -	
	CHECKED - AS	REVISED -	
PLOT DATE =10/22/2025	DATE - 05-08-25	REVISED -	

STATE OF ILLINOIS
DEPARTMENT OF TRANSPORTATION

PROPOSED PAVEMENT MARKING
INTERSTATE 55

SCALE: 1"=50' | SHEET OF SHEETS | STA. 254+00.00 R2 TO STA. 284+00.00 R2

F.A.I RTE.	SECTION	COUNTY	TOTAL SHEETS	SHEET NO.
55	(57-3) BR	McLEAN	126	54
		CONTRACT NO. 70F37		
	ILLINOIS	FED. AID PROJECT		

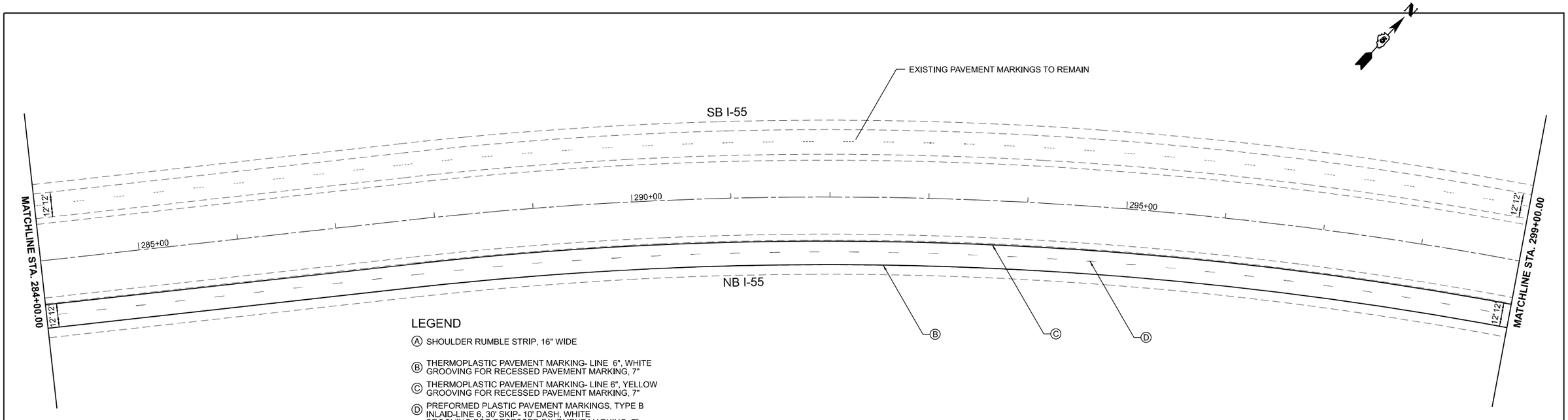

LEGEND

- Ⓐ SHOULDER RUMBLE STRIP, 16" WIDE
- Ⓑ THERMOPLASTIC PAVEMENT MARKING- LINE 6", WHITE GROOVING FOR RECESSED PAVEMENT MARKING, 7"
- Ⓒ THERMOPLASTIC PAVEMENT MARKING- LINE 6", YELLOW GROOVING FOR RECESSED PAVEMENT MARKING, 7"
- Ⓓ PREFORMED PLASTIC PAVEMENT MARKINGS, TYPE B INLAID-LINE 6, 30' SKIP- 10' DASH, WHITE GROOVING FOR RECESSED PAVEMENT MARKING, 7"
- Ⓔ THERMOPLASTIC PAVEMENT MARKING- LINE 8", WHITE GROOVING FOR RECESSED PAVEMENT MARKING, 9"

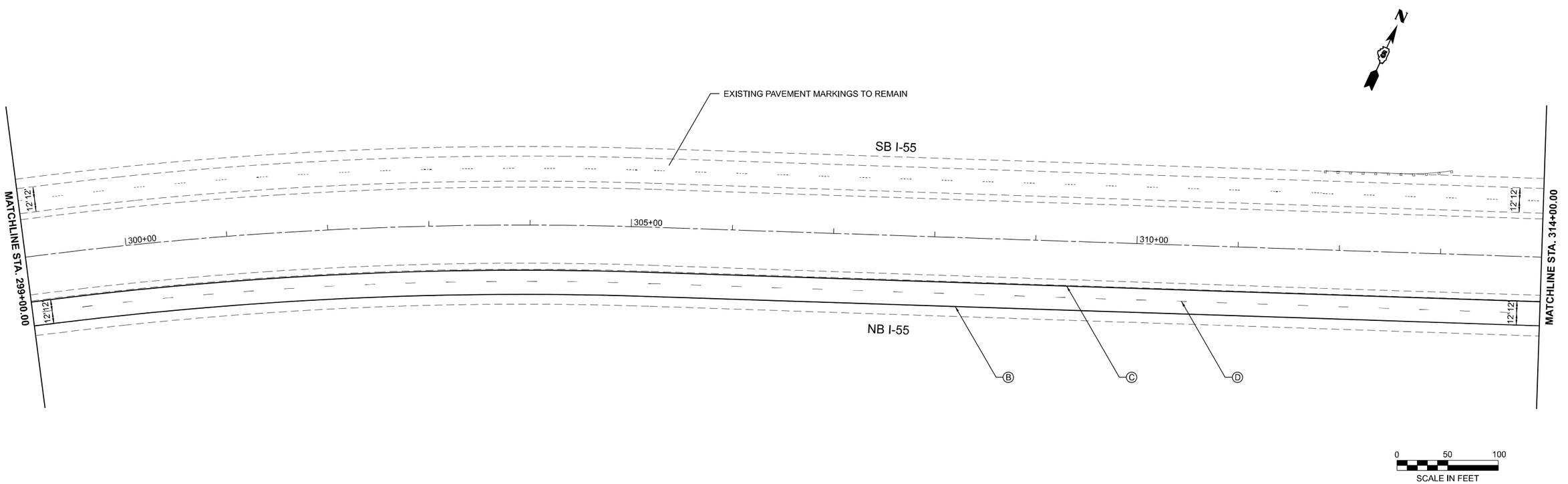

I55_ALL - Plan 3 [Sheet 2]
D370F37-pvt mk container.dgn

AMES Engineering, Inc. CONSULTING ENGINEERS 6330 Belmont Road, Suite 4B Downers Grove, IL 60516	USER NAME = MSomer	DESIGNED - JAR	REVISED -	STATE OF ILLINOIS DEPARTMENT OF TRANSPORTATION	PROPOSED PAVEMENT MARKING INTERSTATE 55	F.A.I RTE.	SECTION	COUNTY	TOTAL SHEETS / SHEET NO.
		DRAWN - MA	REVISED -			55	(57-3) BR	McLEAN	126 / 55
		CHECKED - AS	REVISED -					CONTRACT NO. 70F37	
	PLOT DATE =10/22/2025	DATE - 05-08-25	REVISED -		SCALE: 1"=50' SHEET OF SHEETS STA. 284+00.00 R2 TO STA. 314+00.00 R2		ILLINOIS	FED. AID PROJECT	

LEGEND - BRIDGE PAVEMENT MARKINGS

1. POLYUREA PAVEMENT MARKING TYPE II - LINE 6", WHITE
2. POLYUREA PAVEMENT MARKING TYPE II - LINE 6", YELLOW
3. POLYUREA PAVEMENT MARKING TYPE II - LINE 6", 30' SKIP- 10' DASH, WHITE

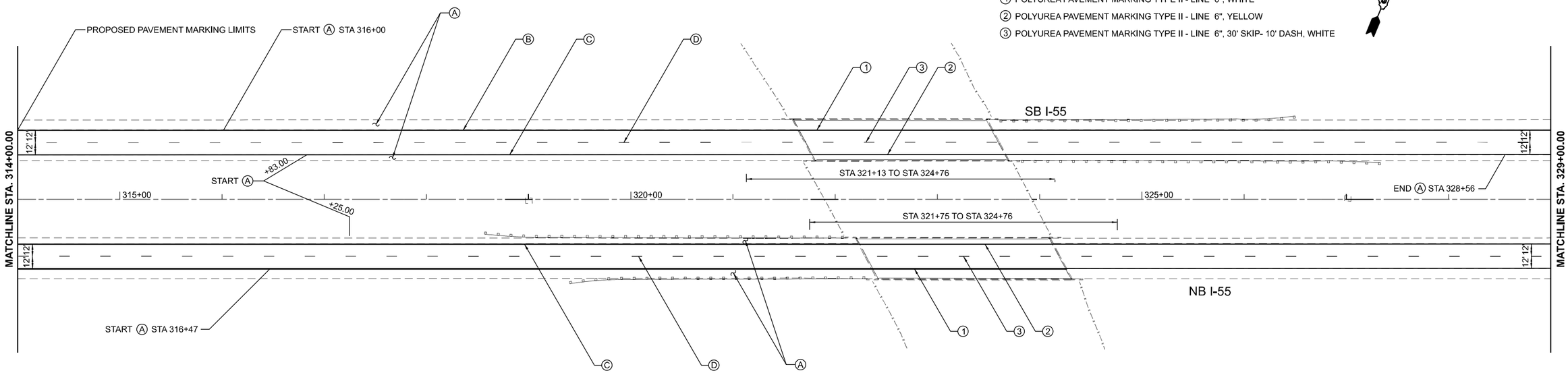

LEGEND

(A) SHOULDER RUMBLE STRIP, 16" WIDE

(B) THERMOPLASTIC PAVEMENT MARKING- LINE 6", WHITE
GROOVING FOR RECESSED PAVEMENT MARKING, 7"

(C) THERMOPLASTIC PAVEMENT MARKING- LINE 6", YELLOW
GROOVING FOR RECESSED PAVEMENT MARKING, 7"

(D) PREFORMED PLASTIC PAVEMENT MARKINGS, TYPE B
INLAID-LINE 6, 30' SKIP- 10' DASH, WHITE
GROOVING FOR RECESSED PAVEMENT MARKING, 7"

(E) THERMOPLASTIC PAVEMENT MARKING- LINE 8", WHITE
GROOVING FOR RECESSED PAVEMENT MARKING, 9"

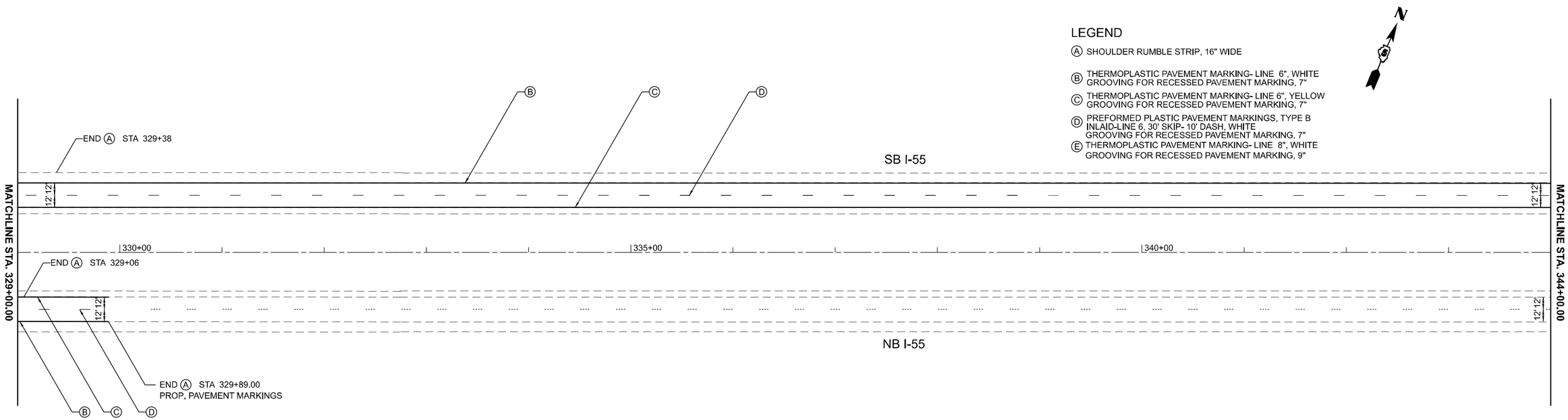

0 50 100
SCALE IN FEET

I55_ALL - Plan 4 [Sheet 3]
D57OF37-pxt mk container.dgn

AMES Engineering, Inc. CONSULTING ENGINEERS 6330 Belmont Road, Suite 4B Downers Grove, IL 60516	USER NAME = MSomer	DESIGNED - JAR	REVISED -	STATE OF ILLINOIS DEPARTMENT OF TRANSPORTATION	PROPOSED PAVEMENT MARKING INTERSTATE 55	F.A.I RTE. 55	SECTION (57-3) BR	COUNTY McLEAN	TOTAL SHEETS 126 / SHEET NO. 56
		DRAWN - MA	REVISED -					CONTRACT NO. 70F37	
		CHECKED - AS	REVISED -						
	PLOT DATE =10/22/2025	DATE - 05-08-25	REVISED -		SCALE: 1"=50' SHEET OF SHEETS STA. 314+00.00 R2 TO STA. 344+00.00 R2			ILLINOIS FED. AID PROJECT	

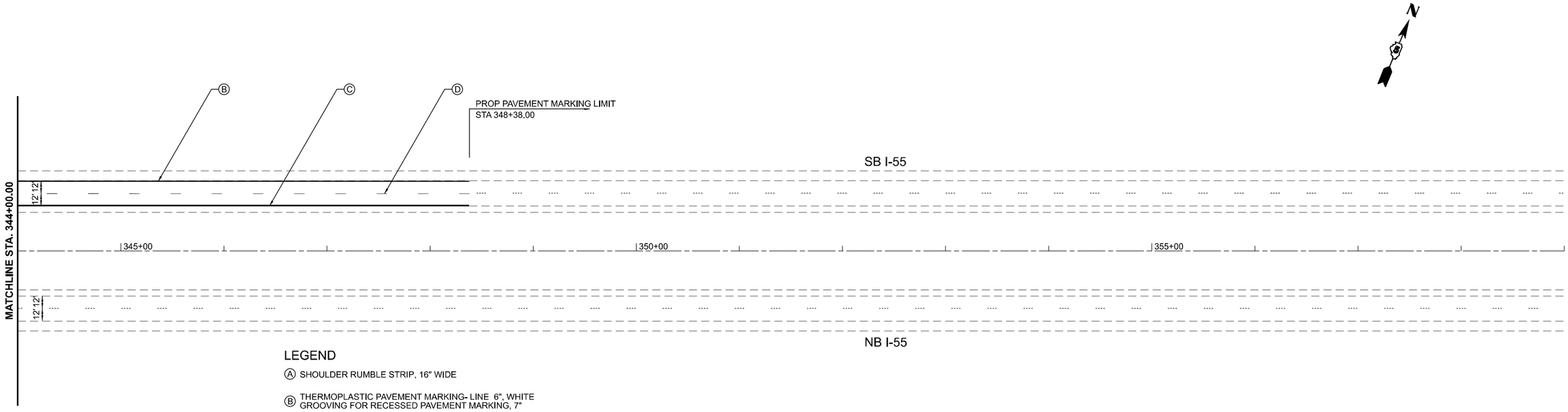

LEGEND

(A) SHOULDER RUMBLE STRIP, 16" WIDE

(B) THERMOPLASTIC PAVEMENT MARKING- LINE 6", WHITE
GROOVING FOR RECESSED PAVEMENT MARKING, 7"

(C) THERMOPLASTIC PAVEMENT MARKING- LINE 6", YELLOW
GROOVING FOR RECESSED PAVEMENT MARKING, 7"

(D) PREFORMED PLASTIC PAVEMENT MARKINGS, TYPE B
INLAID-LINE 6, 30' SKIP- 10' DASH, WHITE
GROOVING FOR RECESSED PAVEMENT MARKING, 7"

(E) THERMOPLASTIC PAVEMENT MARKING- LINE 8", WHITE
GROOVING FOR RECESSED PAVEMENT MARKING, 9"

I55_ALL - Plan 5 [Sheet 4]
D57F37-pxt mk container.dgn

AMES Engineering, Inc.
CONSULTING ENGINEERS
6330 Belmont Road, Suite 4B
Downers Grove, IL 60516

USER NAME = MSomer	DESIGNED - JAR	REVISED -	
	DRAWN - MA	REVISED -	
	CHECKED - AS	REVISED -	
PLOT DATE =10/22/2025	DATE - 05-08-25	REVISED -	

STATE OF ILLINOIS
DEPARTMENT OF TRANSPORTATION

PROPOSED PAVEMENT MARKING
INTERSTATE 55

SCALE: 1"=50' | SHEET OF SHEETS | STA. 344+00.00 R2 TO STA. 359+00.00 R2

F.A.I RTE.	SECTION	COUNTY	TOTAL SHEETS	SHEET NO.
55	(57-3) BR	McLEAN	126	57
		CONTRACT NO. 70F37		
	ILLINOIS	FED. AID PROJECT		

DESIGNATION DIAGRAM

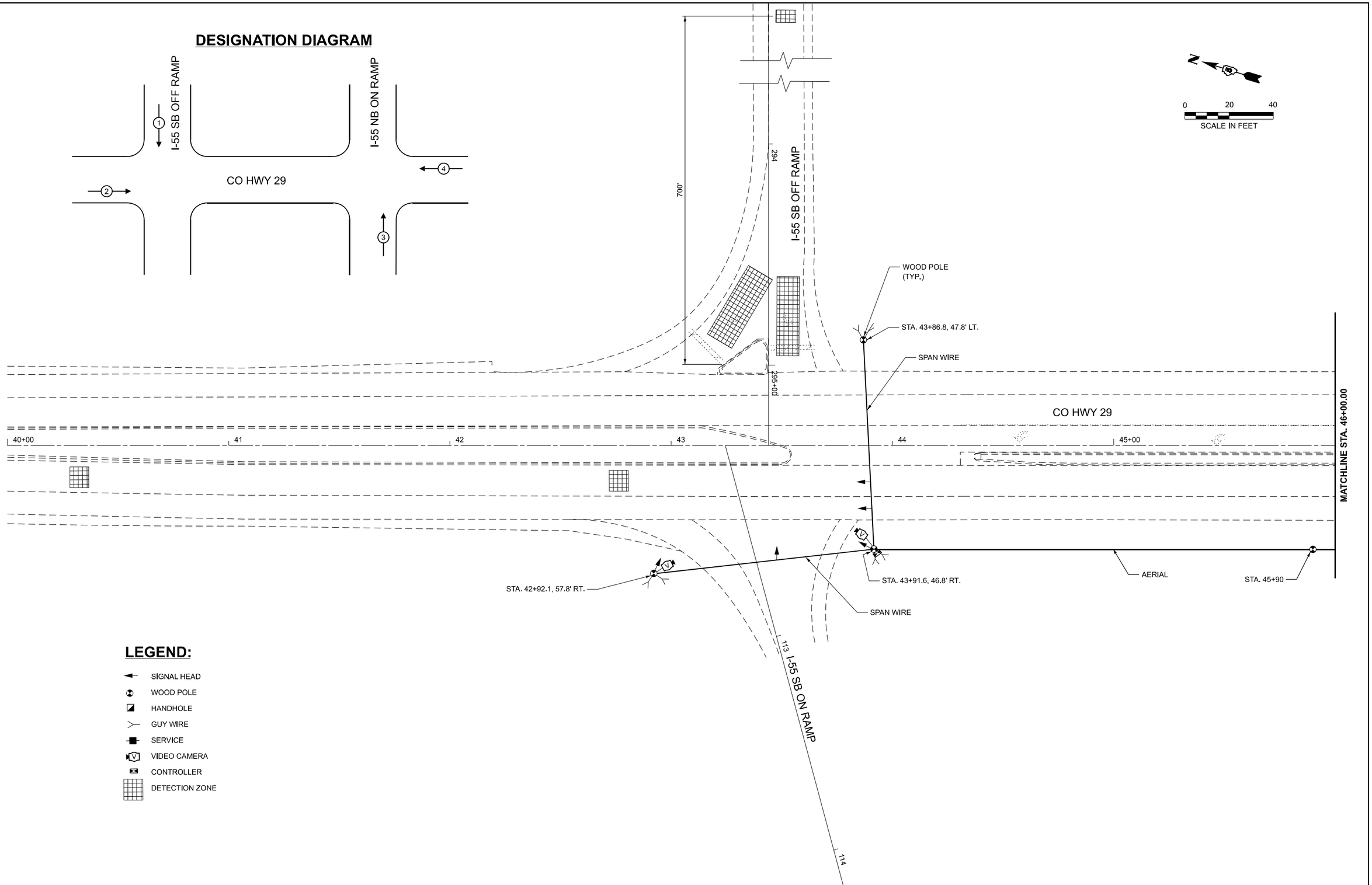

LEGEND:

- SIGNAL HEAD
- WOOD POLE
- HANDHOLE
- GUY WIRE
- SERVICE
- VIDEO CAMERA
- CONTROLLER
- DETECTION ZONE

TOWANDA - SIGNAL 1
F:\Projects\1095-Strand I and II Var\WO 1\Design\Sht\D570F37-sht-ts-01-temp.dgn

AMES Engineering, Inc. CONSULTING ENGINEERS 6330 Belmont Road, Suite 4B Downers Grove, IL 60516	USER NAME = mdeitche	DESIGNED - TM	REVISED -	STATE OF ILLINOIS DEPARTMENT OF TRANSPORTATION	TEMPORARY TRAFFIC SIGNAL INSTALLATION CO. HWY. 29 & I-55 SB RAMPS
		DRAWN - TM	REVISED -		
	PLOT SCALE = 0.16666633 ' / in.	CHECKED - AS	REVISED -		
	PLOT DATE = 10/2/2025	DATE - 10-17-25	REVISED -		SCALE: 1"=20' SHEET 1 OF 3 SHEETS STA. 40+00.00 TO STA. 46+00.00

F.A.I RTE.	SECTION	COUNTY	TOTAL SHEETS	SHEET NO.
55	(57-3) BR	McLEAN	126	58
		CONTRACT NO. 70F37		
		ILLINOIS	FED. AID PROJECT	

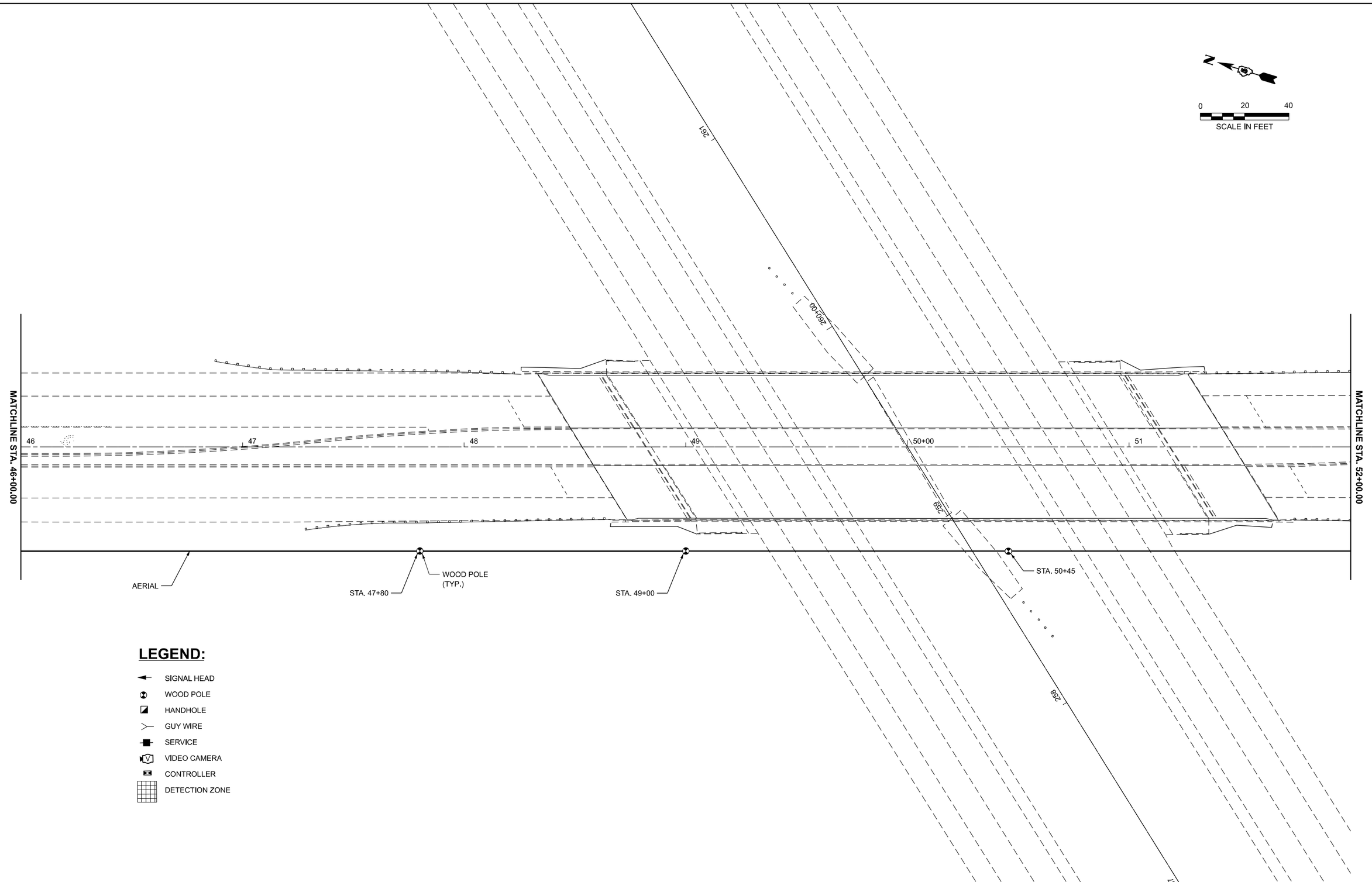

TOWANDA - SIGNAL 2
F:\Projects\1095-Strand I and II Var\WO 1\Design\Sht\D570F37-sht-ts-02-temp.dgn

AMES Engineering, Inc.
CONSULTING ENGINEERS
6330 Belmont Road, Suite 4B
Downers Grove, IL 60516

USER NAME = mdeitche	DESIGNED - TM	REVISED -	
	DRAWN - TM	REVISED -	
PLOT SCALE = 0.16666633 ' / in.	CHECKED - AS	REVISED -	
PLOT DATE = 10/2/2025	DATE - 10-17-25	REVISED -	

STATE OF ILLINOIS
DEPARTMENT OF TRANSPORTATION

TEMPORARY TRAFFIC SIGNAL INSTALLATION
CO. HWY. 29 & I-55 NB RAMPS

SCALE: 1"=20' | SHEET 2 OF 1 SHEETS | STA. 46+00.00 TO STA. 52+00.00

F.A.I RTE.	SECTION	COUNTY	TOTAL SHEETS	SHEET NO.
55	(57-3) BR	McLEAN	126	59

CONTRACT NO. 70F37

ILLINOIS | FED. AID PROJECT

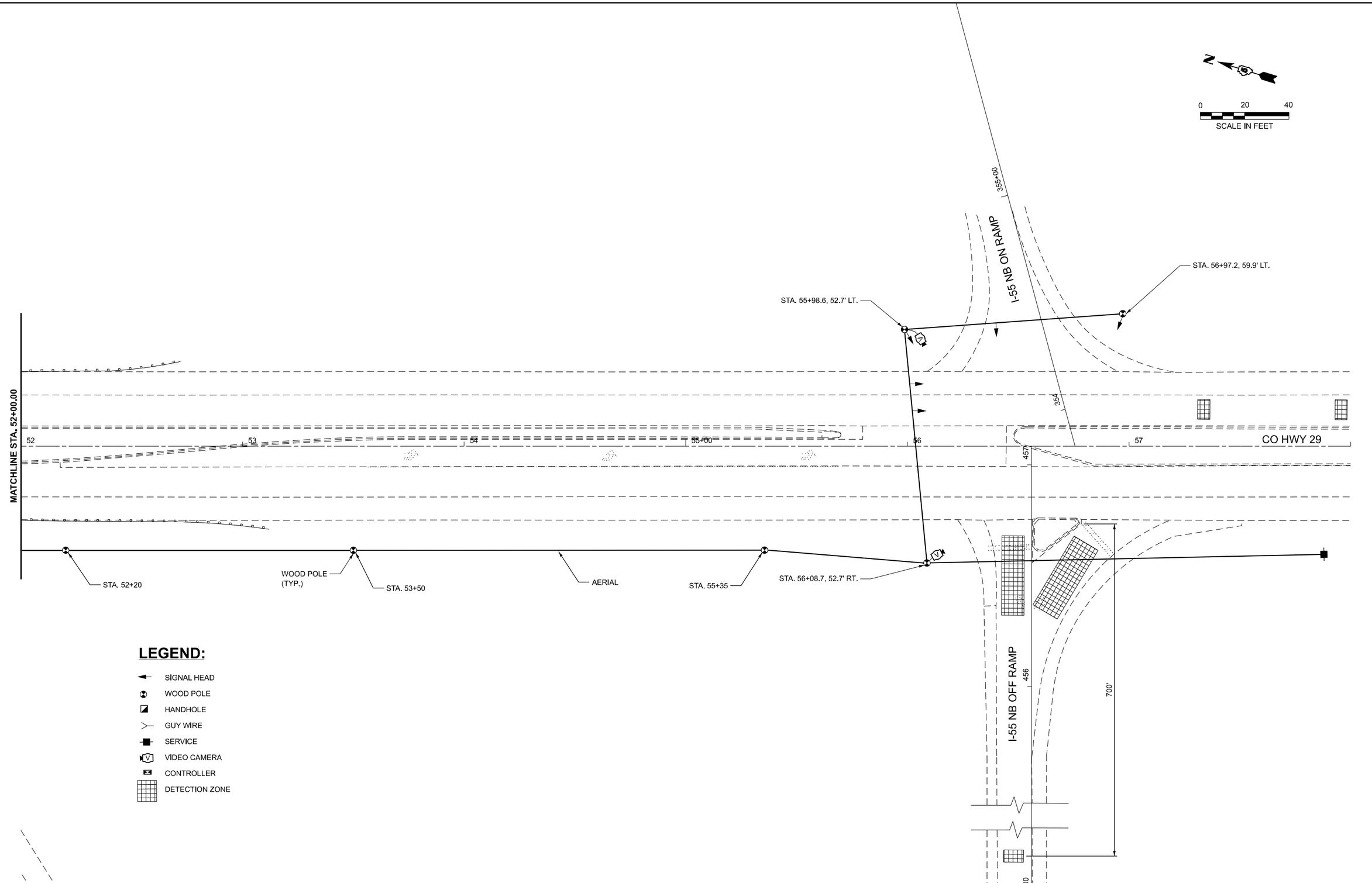

TOWANDA - SIGNAL 3
F:\Projects\095-Strand I and II Van\WO 1\Design\Sht\D570F37-sht-ts-03-temp.dgn

AMES Engineering, Inc.
CONSULTING ENGINEERS
6330 Belmont Road, Suite 4B
Downers Grove, IL 60516

USER NAME = mdeitche	DESIGNED - TM	REVISED -	
	DRAWN - TM	REVISED -	
PLOT SCALE = 0.16666633 ' / in.	CHECKED - AS	REVISED -	
PLOT DATE = 10/2/2025	DATE - 10-17-25	REVISED -	

STATE OF ILLINOIS
DEPARTMENT OF TRANSPORTATION

TEMPORARY TRAFFIC SIGNAL INSTALLATION
CO. HWY. 29 & I-55 NB RAMPS

SCALE: 1"=20' | SHEET 3 OF 3 SHEETS | STA. 52+00.00 TO STA. 58+00.00

F.A.I RTE.	SECTION	COUNTY	TOTAL SHEETS	SHEET NO.
55	(57-3) BR	McLEAN	126	60
		CONTRACT NO. 70F37		
	ILLINOIS	FED. AID PROJECT		

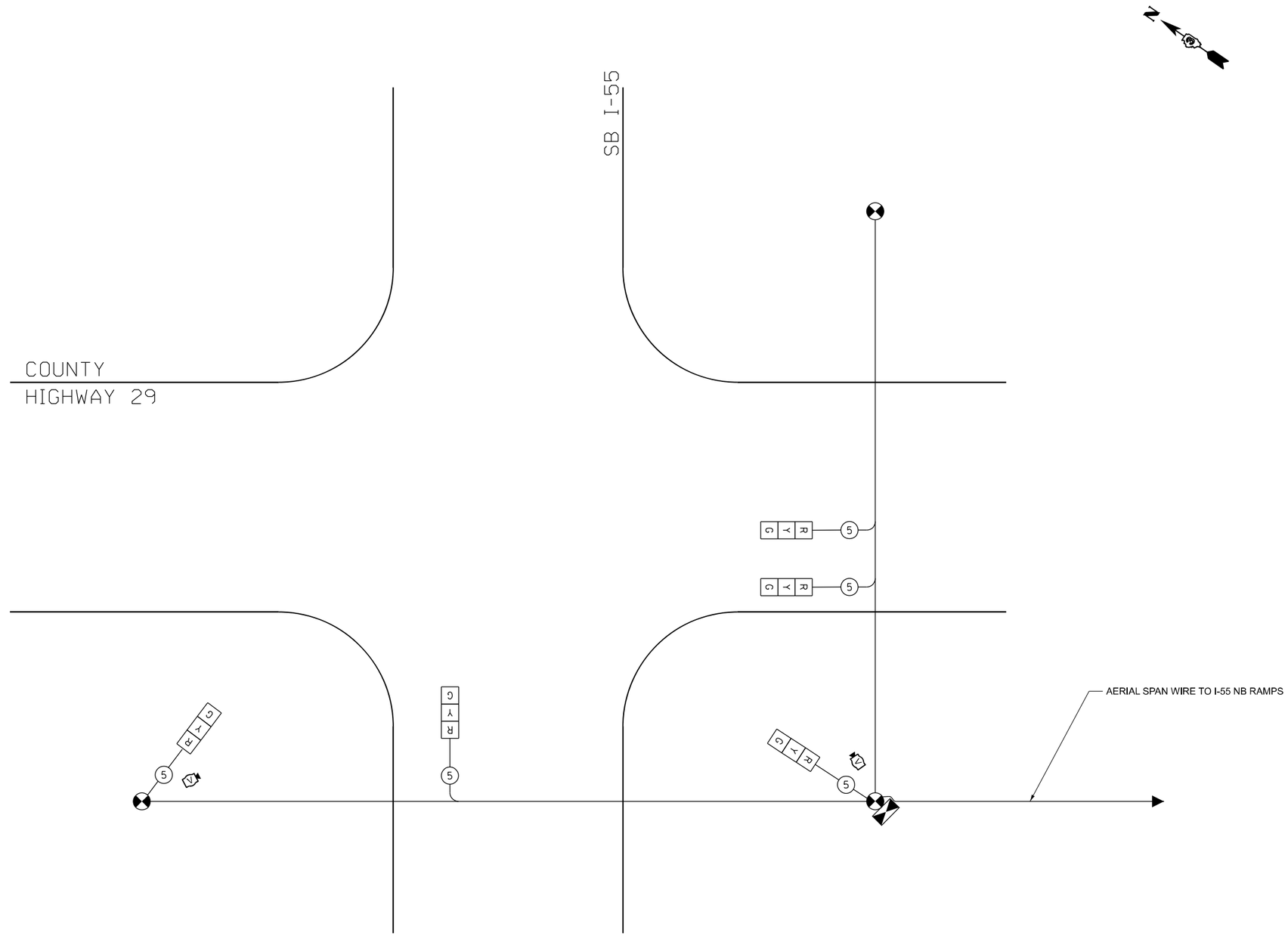

TEMPORARY CABLE PLAN
(NOT TO SCALE)

CAB-1 [Sheet]
F:\Projects\1095-Strand I and II Var\WO 1\Design\Sht\D5\70F37-sht-ts-03-I-55SB Temp Cab.dgn

AMES Engineering, Inc. CONSULTING ENGINEERS 6330 Belmont Road, Suite 4B Downers Grove, IL 60516	USER NAME = mdeitche	DESIGNED - TM	REVISED -	STATE OF ILLINOIS DEPARTMENT OF TRANSPORTATION	TEMPORARY CABLE PLAN, TEMPORARY PHASE DESIGNATION DIAGRAM, AND TEMPORARY EMERGENCY VEHICLE PREEMPTION SEQUENCE COUNTY HIGHWAY 29 AT I -55 SOUTHBOUND RAMPS	F.A.I RTE.	SECTION	COUNTY	TOTAL SHEETS	SHEET NO.
		DRAWN - TM	REVISED -			55	(57-3) BR	McLEAN	126	61
	PLOT SCALE = 0.16666633 ' / in.	CHECKED - AS	REVISED -					CONTRACT NO. 70F37		
	PLOT DATE = 10/2/2025	DATE - 10-17-25	REVISED -		SCALE: N.T.S. SHEET 1 OF 1 SHEETS STA. TO STA.		ILLINOIS	FED. AID PROJECT		

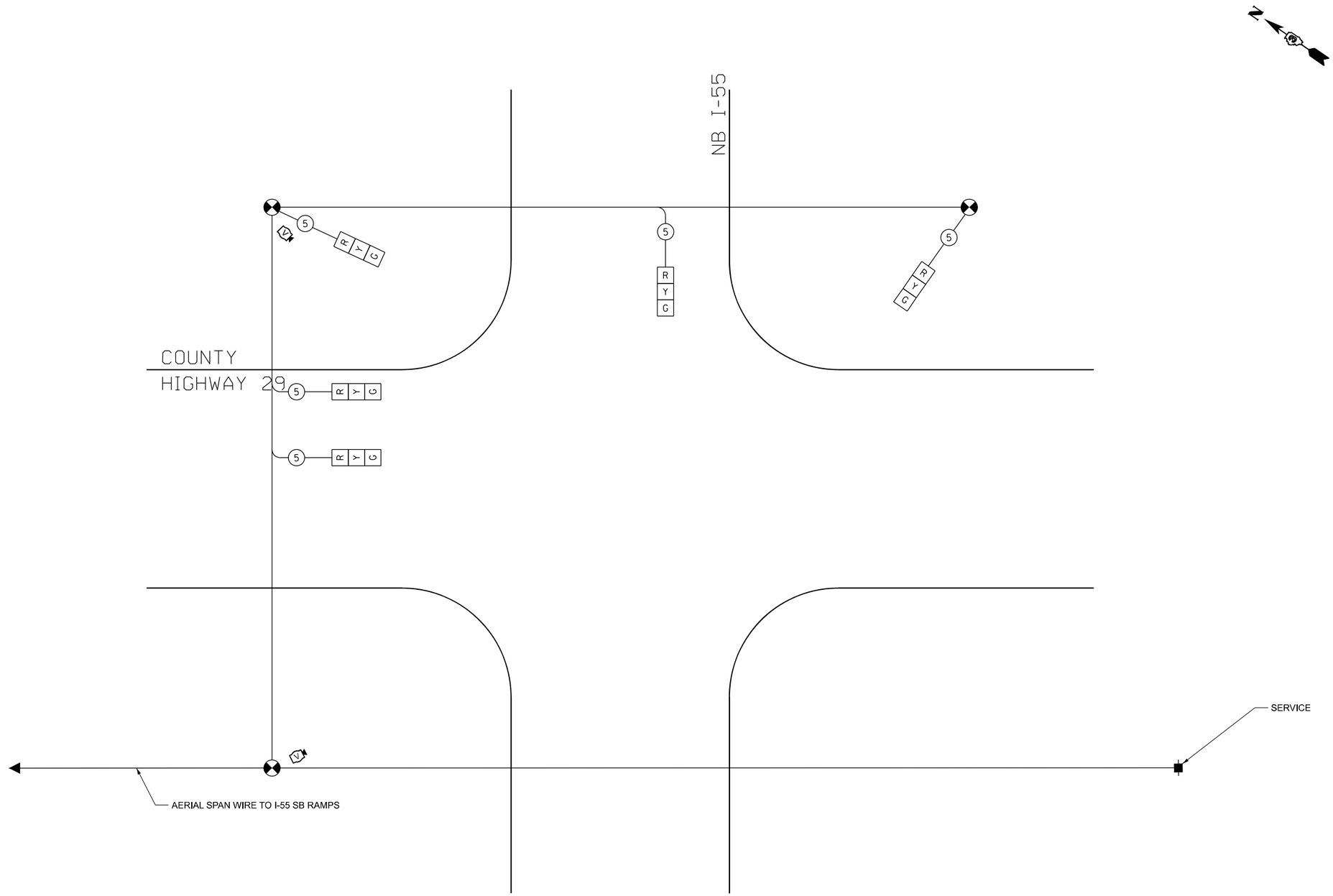

TEMPORARY CABLE PLAN
(NOT TO SCALE)

CAB-1 [Sheet]
F:\Projects\1095-Strand I and II Var\WO 1\Design\Sht\D570F37-sht-ts-06-I-55NB Temp Cab.dgn

AMES Engineering, Inc. CONSULTING ENGINEERS 6330 Belmont Road, Suite 4B Downers Grove, IL 60516	USER NAME = mdeitche	DESIGNED - TM	REVISED -	STATE OF ILLINOIS DEPARTMENT OF TRANSPORTATION	TEMPORARY CABLE PLAN, TEMPORARY PHASE DESIGNATION DIAGRAM, AND TEMPORARY EMERGENCY VEHICLE PREEMPTION SEQUENCE COUNTY HIGHWAY 29 AT I -55 NORTHBOUND RAMPS
		DRAWN - TM	REVISED -		
	PLOT SCALE = 0.16666633 ' / in.	CHECKED - AS	REVISED -		
	PLOT DATE = 10/2/2025	DATE - 10-17-25	REVISED -		SCALE: N.T.S. SHEET 1 OF 1 SHEETS STA. TO STA.

F.A.I RTE.	SECTION	COUNTY	TOTAL SHEETS	SHEET NO.
55	(57-3) BR	McLEAN	126	62
		CONTRACT NO. 70F37		
	ILLINOIS	FED. AID PROJECT		

Benchmark: PT Number 5121-1 = Chiseled Square NE Wing of Structure 057-0162 Elev. 806.63 and
5121-2 = Chiseled Square SW Wing of Structure 057-0162 Elev. 806.40.

Existing Structure: S.N. 057-0162 was built in 1974 as F.A.I. 55, Section 57-3HB. In 2000, bridge joints were replaced and repairs were made to the deck, along with an overlay replacement. The existing structure consists of continuous, composite steel beams with a reinforced concrete deck superstructure supported on abutments and piers with pile foundations. The structure measures 295'-0" back to back abutments and out-to-out deck width of 68'-0".

Traffic Control: Traffic is to be maintained utilizing staged construction.

Salvage: None.

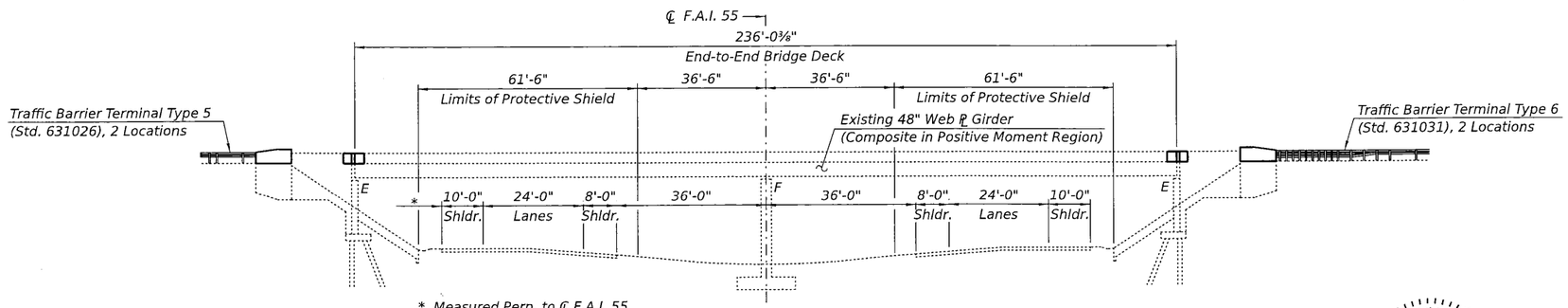

ELEVATION

(Looking North)

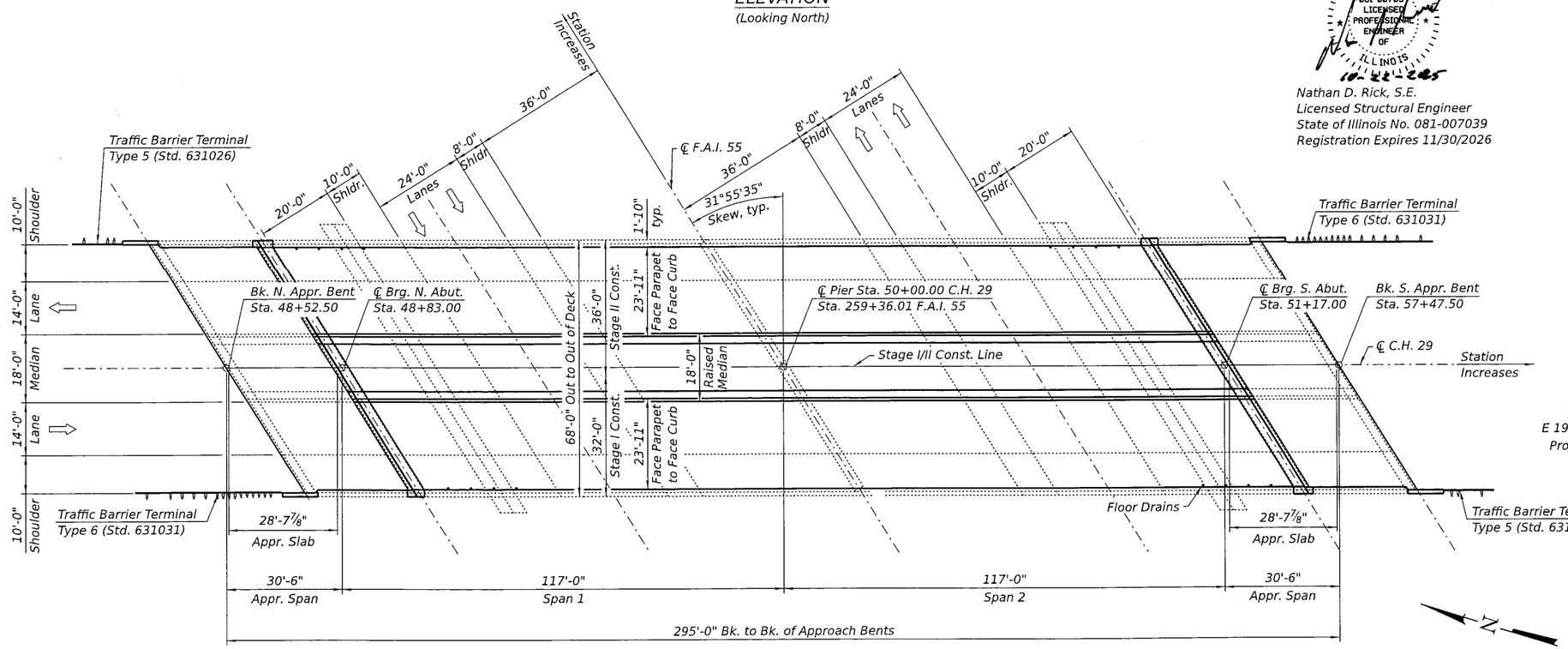

PLAN

NATHAN D. RICK
081-007039
LICENSED PROFESSIONAL ENGINEER OF ILLINOIS
10-22-2025

Nathan D. Rick, S.E.
Licensed Structural Engineer
State of Illinois No. 081-007039
Registration Expires 11/30/2026

SCOPE OF WORK

1. Remove existing HMA overlay on the existing bridge deck and approach span.
2. Scarify existing bridge deck and approach span ¾" depth.
3. Perform Partial and Full Depth Deck Repairs as directed by the Engineer.
4. Perform Median Deck Replacement as directed by the Engineer.
5. Remove and replace existing Preformed Joint Seal with a Strip Seal.
6. Jack and remove existing rocker bearings and replace with Type I Elastomeric Bearings with Steel Extensions.
7. Perform Structure Steel Repairs and replace End Diaphragms.
8. Perform Concrete Encasement at the front face of Abutments.
9. Place Bridge Deck Latex Concrete Overlay, 2½" with fiber enhancement.
10. Perform formed concrete repairs at substructure and bridge parapets as directed by the Engineer.

DESIGN SPECIFICATIONS

2002 AASHTO LRFD Bridge Design Specifications, 17th Edition (LFD)

LOADING HS20-44

No Additional FWS Allowed

DESIGN STRESSES

FIELD UNITS

New Construction:
f'c = 4,000 psi (Superstructure)
f'c = 3,500 psi (Substructure)
fy = 60,000 psi (Reinforcement)

Existing Construction:
fc = 1,200 psi (Deck Slab)
fc = 1,400 psi (Curb, Parapet, Substructure, Approach Slab)
fs = 20,000 psi (Reinforcement)
fs = 20,000 psi (Structural Steel)

Note: Up to ¼" to be ground off the bridge deck and the bridge approach slabs. The proposed profile is to match the existing profile.

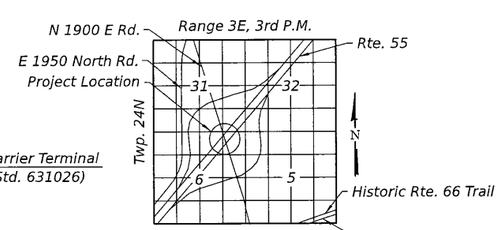

LOCATION SKETCH

GENERAL PLAN AND ELEVATION
COUNTY HIGHWAY 29 OVER F.A.I. 55
SECTION (57-3)BR
MCLEAN COUNTY
STA. 259+36.01
S.N. 057-0162

MODEL: Default
FILE NAME: S:\JOL\6300-6399\6346\125\Drawings\CAD\ORD-10.12\CADsheets\057-0162-001-GPE.dgn

STRAND ASSOCIATES
1170 SOUTH HOUBOLT ROAD
JOLIET, ILLINOIS 60431
(815) 744-4200
IDFPR NO. 184-001273

USER NAME = CodyH	DESIGNED - ELR	REVISED -	
	CHECKED - NDR	REVISED -	
PLOT SCALE = 0:2.0000 ':" / in.	DRAWN - CJH	REVISED -	
PLOT DATE = 10/22/2025	CHECKED - NDR	REVISED -	

STATE OF ILLINOIS
DEPARTMENT OF TRANSPORTATION

GENERAL PLAN AND ELEVATON
STRUCTURE NO. 057-0162

SHEET 1 OF 17 SHEETS

F.A.I. RTE.	SECTION	COUNTY	TOTAL SHEETS	SHEET NO.
55	(57-3)BR	MCLEAN	126	63
		CONTRACT NO. 70F37		
	ILLINOIS	FED. AID PROJECT		

10/22/2025 4:06:36 PM

GENERAL NOTES

1. All structural steel shall conform to AASHTO classification M-270 Gr. 36, unless otherwise noted.

2. All new structural steel and bearing assemblies shall be hot-dip galvanized. See Special Provisions for "Hot Dip Galvanizing for Structural Steel".

3. Fasteners shall be ASTM F 3125 Grade A325 Type 1, mechanically galvanized bolts. Bolts $^{3}/_{4}$ in. diameter, holes $^{13}/_{16}$ in. diameter, unless otherwise noted.

4. Calculated weight of Structural Steel = 23,530 lb. (Grade 36)

5. No field welding is permitted except as specified in the contract documents.

6. Reinforcement bars designated (E) shall be epoxy coated.

7. Prior to pouring the new concrete, rust, mill scale, and other potentially detrimental foreign material shall be removed from the surfaces in contract with the concrete utilizing pneumatic needle scalers or by sand blasting. Areas cleaned shall be coated with 2 coats of aluminum epoxy mastic art 1008.03. Cost will be included in the pay item covering removal of the existing concrete.

8. Plan dimensions and details relative to the existing structure have been taken from existing plans are subject to nominal construction variations. The Contractor shall field verify existing dimensions and details affecting new construction and make necessary approved adjustments prior to construction or ordering of materials. Such variations shall not be cause for additional compensation for a change in scope of the work, however, the Contractor will be paid for the quantity actually furnished at the unit price bid for the work.

9. Concrete Sealer shall be applied to the designated areas of the cleaned beam seats. The Concrete Sealer shall be a "film forming" type for horizontal surfaces.

10. The existing structural steel coating contains lead. The Contractor shall take appropriate precautions to address the presence of lead on this project.

11. The existing bearings contain lead plates. The Contractor shall take appropriate precautions to address the presence of lead on this project.

12. Existing structural steel that will be in contact with new structural steel shall be cleaned and painted prior to erection as required by the Special Provision "Cleaning and Painting Contact Surface Areas of Existing Steel Structures".

13. Joint openings shall be adjusted to Article 503.10(c) of the Standard Specifications when the Concrete Superstructure is poured at an ambient temperature other than 50°F.

14. Synthetic Fibers shall be included in the bridge deck concrete overlay specified. See Special Provisions.

15. Longitudinal Concrete Removal and Concrete Superstructures of the median must be done in alternating sections of no more than 10 ft. Adjacent sections must not be removed until both of the following requirements are met.
    - At least 72 hours shall have elapsed from the end of the previous pour.
    - The concrete shall have attained a minimum modulus of rupture of 650 psi or a minimum compressive strength of 3500 psi.

16. Protective Coat shall be applied to all new concrete superstructure and all new concrete overlays as specified in Article 503.19 of the Standard Specifications.

INDEX OF SHEETS

TOTAL BILL OF MATERIALS

Item	Unit	Super	Sub	Total
CONCRETE REMOVAL	CU YD	93.5	20.7	114.2
PROTECTIVE SHIELD	SQ YD	984		984
FLOOR DRAINS	EACH	16		16
CONCRETE STRUCTURES	CU YD		35.5	35.5
CONCRETE SUPERSTRUCTURE	CU YD	87.0		87.0
PROTECTIVE COAT	SQ YD	2,376		2,376
FURNISHING AND ERECTING STRUCTURAL STEEL	POUND		10,940	10,940
REINFORCEMENT BARS, EPOXY COATED	POUND	5,510	4,830	10,340
BAR SPLICERS	EACH	42		42
PREFORMED JOINT STRIP SEAL	FOOT	156		156
ELASTOMERIC BEARING ASSEMBLY, TYPE I	EACH		18	18
ANCHOR BOLTS, 3/4"	EACH		72	72
HOT-MIX ASPHALT SURFACE REMOVAL (DECK)	SQ YD	1,565		1,565
DECK SLAB REPAIR (PARTIAL)	SQ YD	49		49
DECK SLAB REPAIR (FULL DEPTH, TYPE I)	SQ YD	4		4
DECK SLAB REPAIR (FULL DEPTH, TYPE II)	SQ YD	58		58
BRIDGE DECK SCARIFICATION 3/4"	SQ YD	1,470		1,470
BRIDGE DECK LATEX CONCRETE OVERLAY, 2 1/2"	SQ YD	1,470		1,470
STRUCTURAL REPAIR OF CONCRETE (DEPTH EQUAL TO OR LESS THAN 5 INCHES)	SQ FT	693	8	701
CONCRETE SEALER	SQ FT		380	380
BRIDGE DECK GROOVING (LONGITUDINAL)	SQ YD	1,415		1,415
STRUCTURAL STEEL REMOVAL	POUND	6,240		6,240
STRUCTURAL STEEL REPAIR	POUND	12,940		12,940
JACK AND REMOVE EXISTING BEARINGS	EACH		18	18
CLEANING BRIDGE SEATS	SQ FT		304	304
DIAMOND GRINDING (BRIDGE SECTION)	SQ YD	1,300		1,300

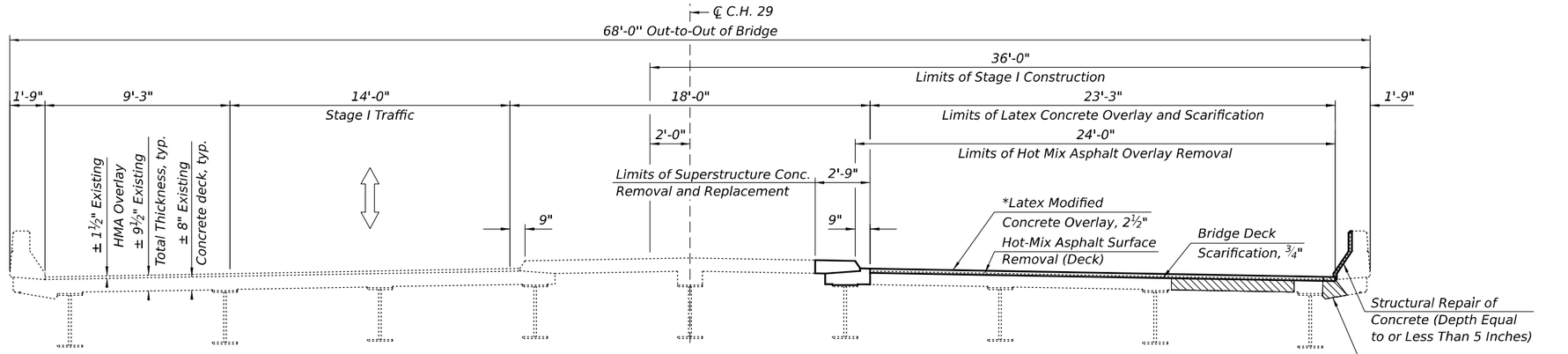

STAGE I CONSTRUCTION

(Looking South)

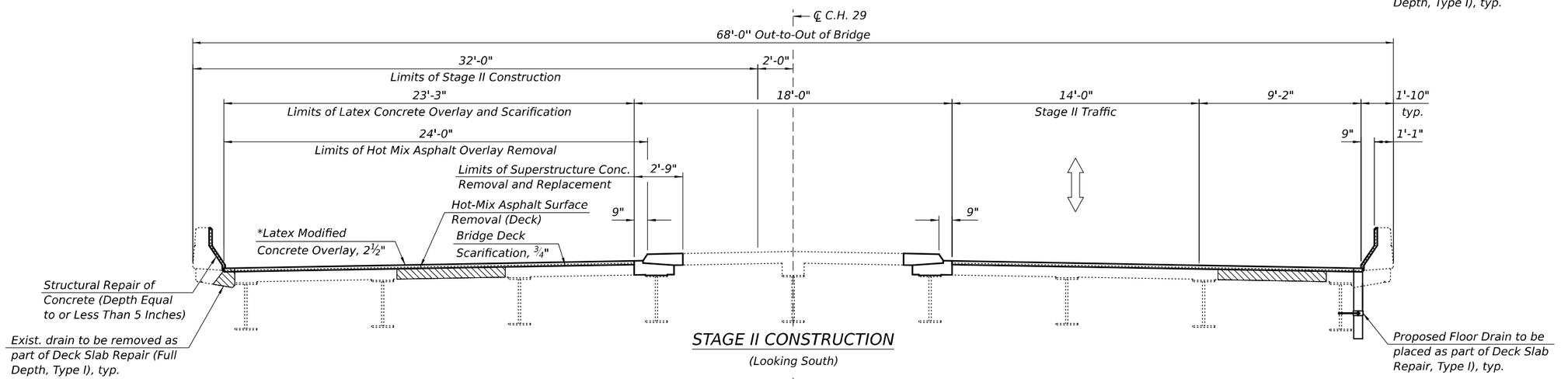

STAGE II CONSTRUCTION

(Looking South)

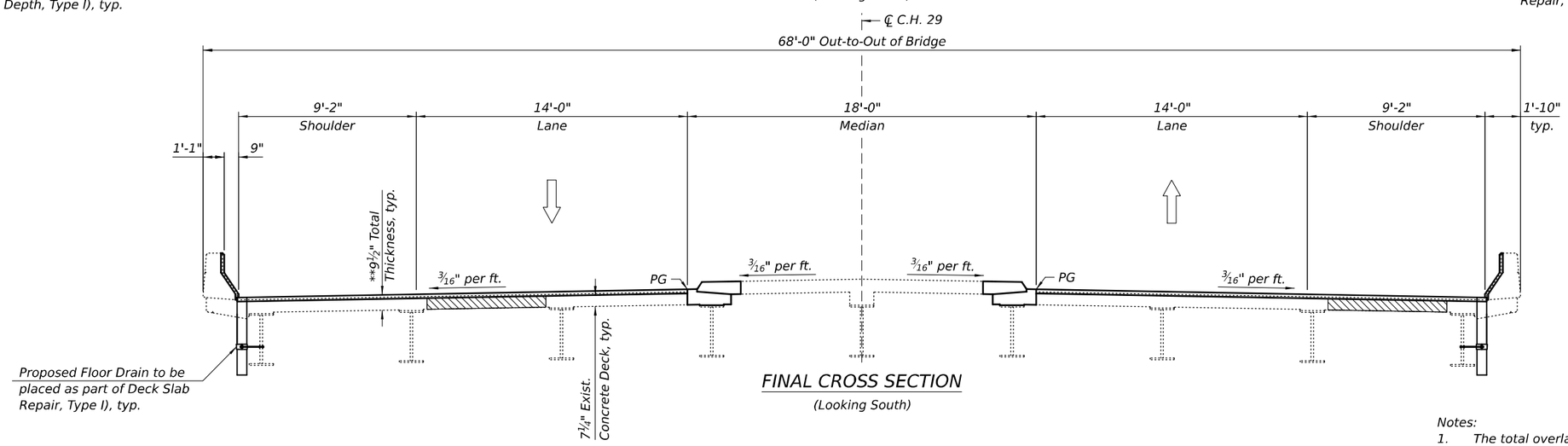

FINAL CROSS SECTION

(Looking South)

LEGEND

Deck Slab Repair (Full Depth)

* Prior to Grinding

** After Grinding

Notes:

1. The total overlay thickness is based on existing plans. The actual thickness of the overlay may vary.
2. Up to ¼" to be ground off the bridge deck.

MODEL: Default
FILE NAME: S:\JOL\6300-8399\63461\25\Drawings\CAD\ORD-10.12\CADsheets\057-0162-003-CS.dgn
10/22/2025 4:06:39 PM

STRAND ASSOCIATES
1170 SOUTH HOUBOLT ROAD
JOLIET, ILLINOIS 60431
(815) 744-4200
IDFPR NO. 184-001273

USER NAME = CodyH	DESIGNED - ELR	REVISED -	
	CHECKED - NDR	REVISED -	
PLOT SCALE = 0.167 ' / in.	DRAWN - CJH	REVISED -	
PLOT DATE = 10/22/2025	CHECKED - ELR	REVISED -	

STATE OF ILLINOIS
DEPARTMENT OF TRANSPORTATION

CONSTRUCTION STAGING
STRUCTURE NO. 057-0162

SHEET 3 OF 17 SHEETS

F.A.I. RTE.	SECTION	COUNTY	TOTAL SHEETS	SHEET NO.
55	(57-3)BR	MCLEAN	126	65
		CONTRACT NO. 70F37		
	ILLINOIS	FED. AID PROJECT		

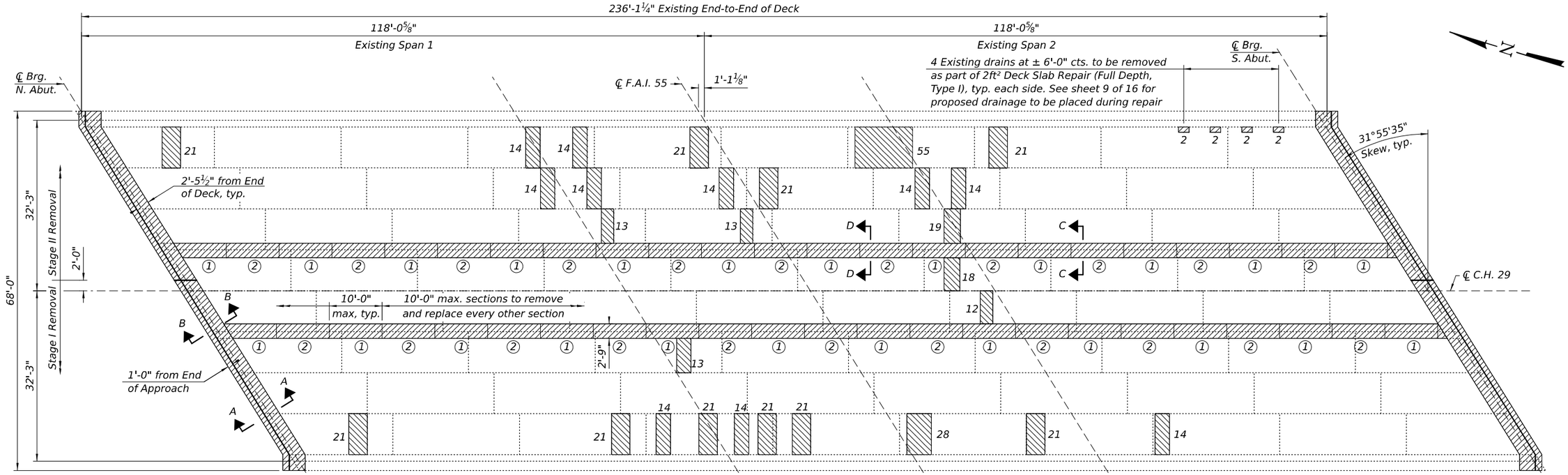

DECK PLAN

LEGEND

- Deck Slab Repair (Full Depth)
- Concrete Removal

Note: Numbers on Plan indicate area in square feet of adjacent repair shape ①,② - Alternating Median Repair Areas, See General Note 15.

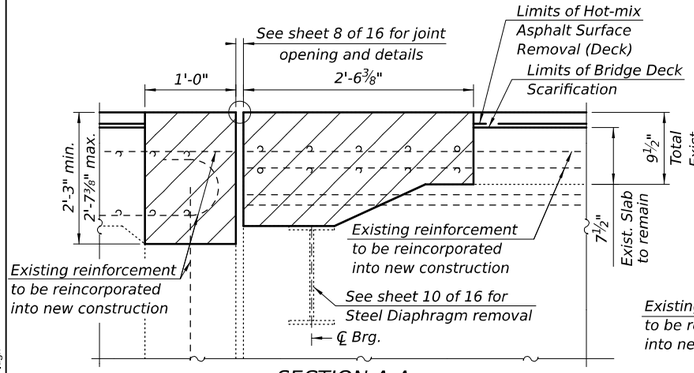

SECTION A-A

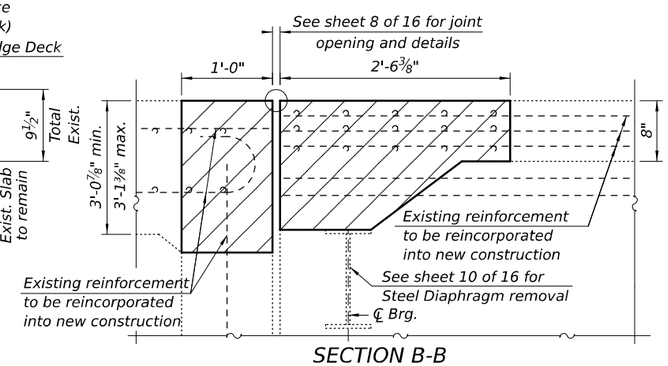

SECTION B-B

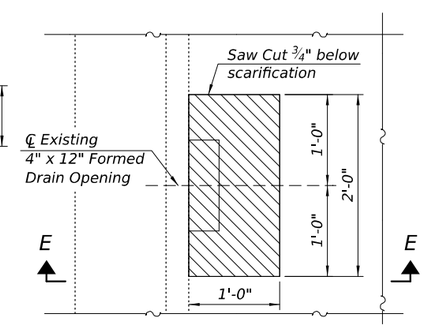

EXISTING DRAIN REMOVAL DETAIL
(16 Location)

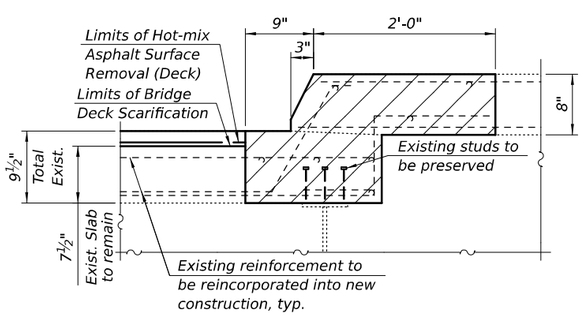

SECTION C-C

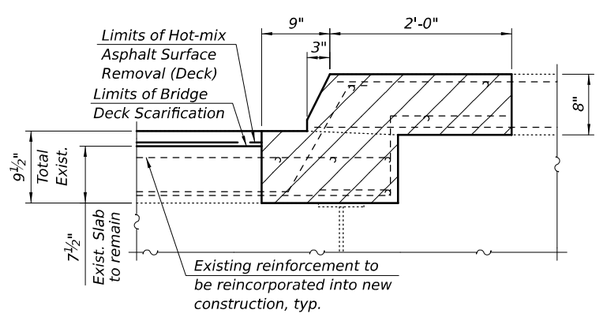

SECTION D-D

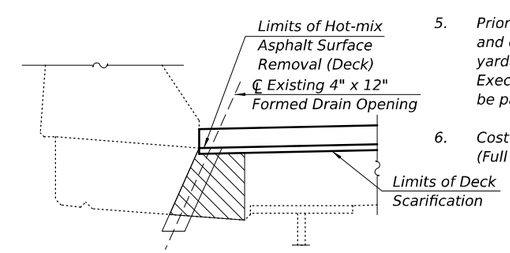

SECTION E-E

Notes:

1. Existing reinforcement shall be cleaned, straightened and incorporated into the new construction. Cost included with Concrete Removal.
2. Any reinforcement bars that are damaged during concrete removal operations shall be repaired or replaced using an approved bar splicer or anchorage system. Cost included in the cost of "Concrete Removal".
3. The Contractor shall use extreme care during concrete removal so as not to damage the existing beams. Any studs that are damaged during concrete removal operations shall be repaired or replaced. Cost included in the cost of "Concrete Removal".
4. The quantity provided for Deck Slab Repair (Partial Depth) is estimated to account for areas of repair that are discovered after deck scarification. The actual areas of repair, if any, will be determined in the field. Areas will be designated for Deck Slab Repair (Partial Depth) only when the top mat of reinforcement is exposed. All other areas will be filled in with the overlay material. All other areas will be filled in with the overlay material. The final surface of the Deck Slab Repair (Partial Depth) is to be left intentionally roughened.
5. Prior to beginning work the Contractor will delineate areas of each type of repair and come to agreement with the Engineer on the limits of each repair. The square yardages of each type of repair will be documented and agreed upon for payment. Execution of the repairs will be as directed by the Engineer and the Contractor will be paid for the quantity actually furnished at the unit price bid for the work.
6. Cost to remove existing floor drains is included in the cost of Deck Slab Repair (Full Depth, Type I).

BILL OF MATERIALS

ITEM	UNIT	QUANTITY
CONCRETE REMOVAL	CU YD	84.1
DECK SLAB REPAIR (PARTIAL)	SQ YD	49
DECK SLAB REPAIR (FULL DEPTH, TYPE I)	SQ YD	4
DECK SLAB REPAIR (FULL DEPTH, TYPE II)	SQ YD	58

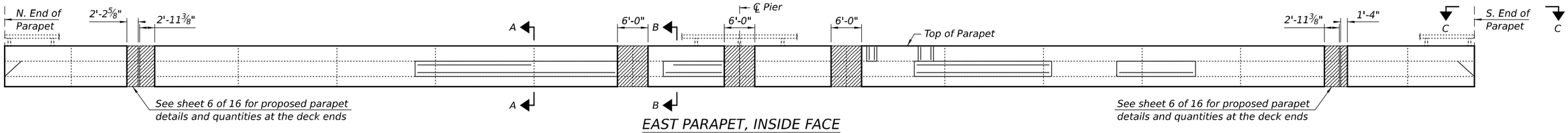

EAST PARAPET, INSIDE FACE

(Looking East. Railing not shown full length for clarity.)

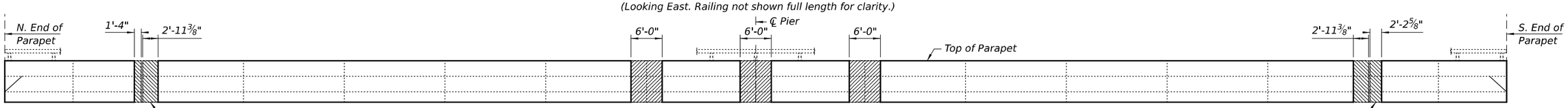

WEST PARAPET, INSIDE FACE

(Looking East through Parapet. Railing not shown full length for clarity.)

LEGEND

- Exposed Reinforcement
- Structural Repair of Concrete (Depth Equal to or less than 5 inches)
- Concrete Removal

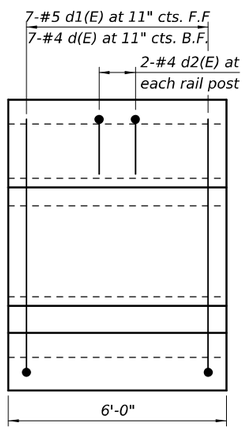

PROPOSED PARAPET ELEVATION

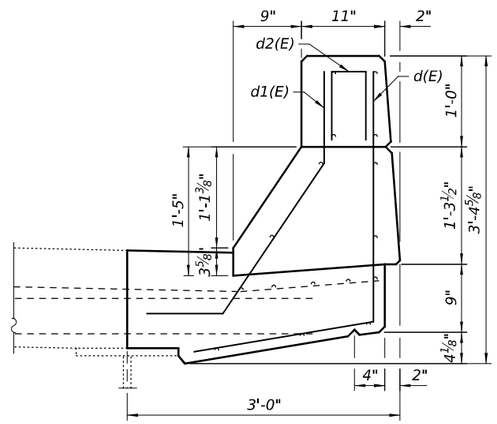

PROPOSED PARAPET CROSS SECTION

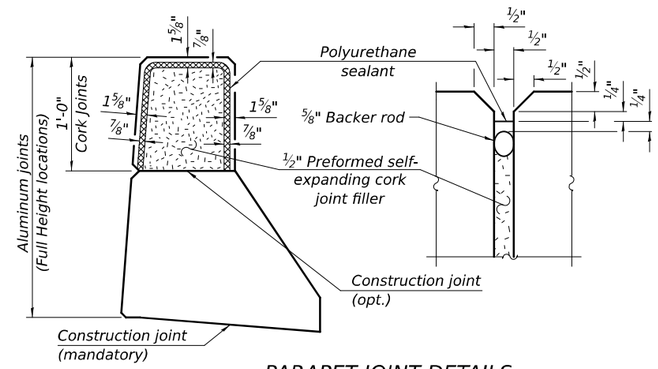

PARAPET JOINT DETAILS

Note:
The polyurethane sealant shall be according to Article 1050.04 of the Standard Specifications and the color shall be gray.
The 3/16" min. aluminum sheet shall be ASTM B 209 alloy 3003-H14 and coated with 5 mils of either bitumen paint or epoxy paint to minimize reaction with wet concrete. Cost included with Concrete Superstructure.

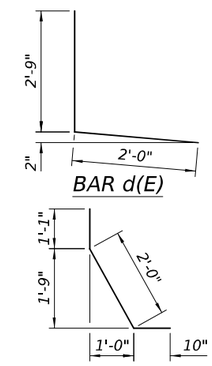

BAR d(E)

BAR d1(E)

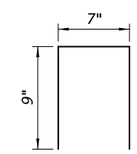

BAR d2(E)

Notes:

1. Quantities and limits shown are estimated for bidding purposes only. The actual areas to be repaired, and the type(s) of repairs to be used, will be determined by the Engineer in the field at the time of construction. The Engineer shall show actual locations and sizes of structural repairs on As-built Plans.
2. The Existing Parapet is to be increased in width along its entire length as part of the repair work. The cost will be included as part of Structural Repair of Concrete (Depth Equal to or less than 5 inches).
3. Existing reinforcement shall be cleaned, straightened, and incorporated into the new construction. Cost included with Concrete Removal.
4. Any reinforcement bars that are damaged during concrete removal operations shall be repaired or replaced using an approved bar splicer or anchorage system. Cost included in the cost of "Concrete Removal".
5. For existing details not shown on plans, see existing drawings.
6. The Rail Posts within the parapet removal and replacement limits shall be removed to allow for the repair work to be completed. Following completion of the parapet ends, theRail Posts shall be re-attached. It is the option of the Contractor to either save and reuse the existing cast-in-place anchor system or use epoxy-grouted threaded rods. The cost of this work shall be included in Concrete Superstructure. See As-Built Plans for aluminum railing detail.
7. The cost of the work to replace parapet joints shall be included in Concrete Superstructure.

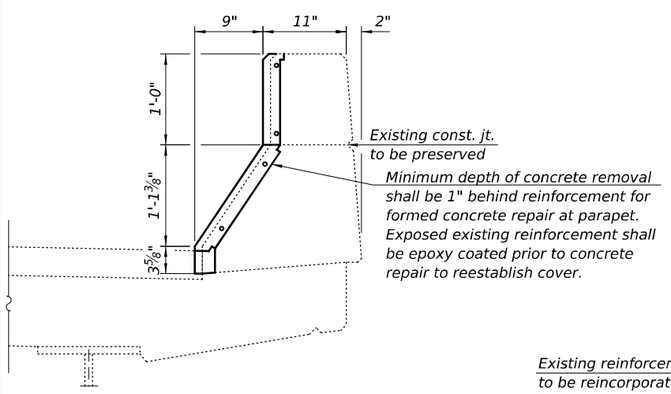

SECTION A-A

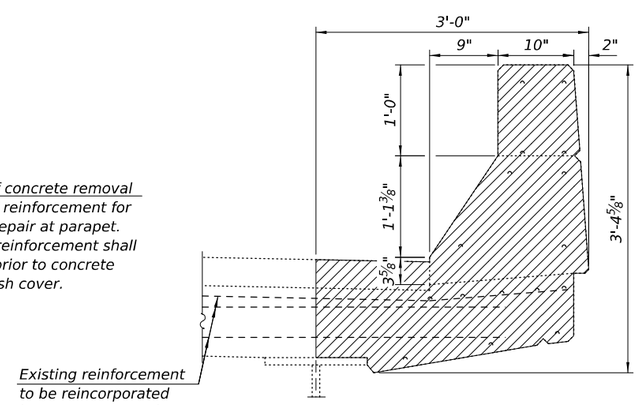

SECTION B-B

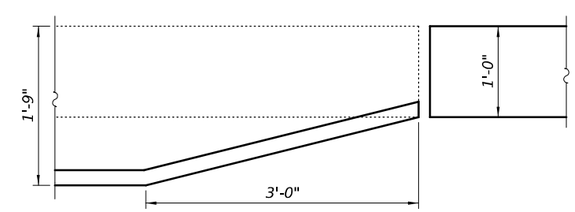

SECTION C-C

(New parapet shall be tapered to meet wingwall and to match geometry of existing plans.)

BILL OF MATERIAL

Bar	No.	Size	Length	Shape
d(E)	42	#4	4'-9"	
d1(E)	42	#5	3'-11"	
d2(E)	12	#4	2'-1"	
CONCRETE REMOVAL			CU YD	9.4
CONCRETE SUPERSTRUCTURE			CU YD	7.4
REINFORCEMENT BARS, EPOXY COATED			POUND	330
STRUCTURAL REPAIR OF CONCRETE (DEPTH EQUAL TO OR LESS THAN 5 INCHES)			SQ FT	693

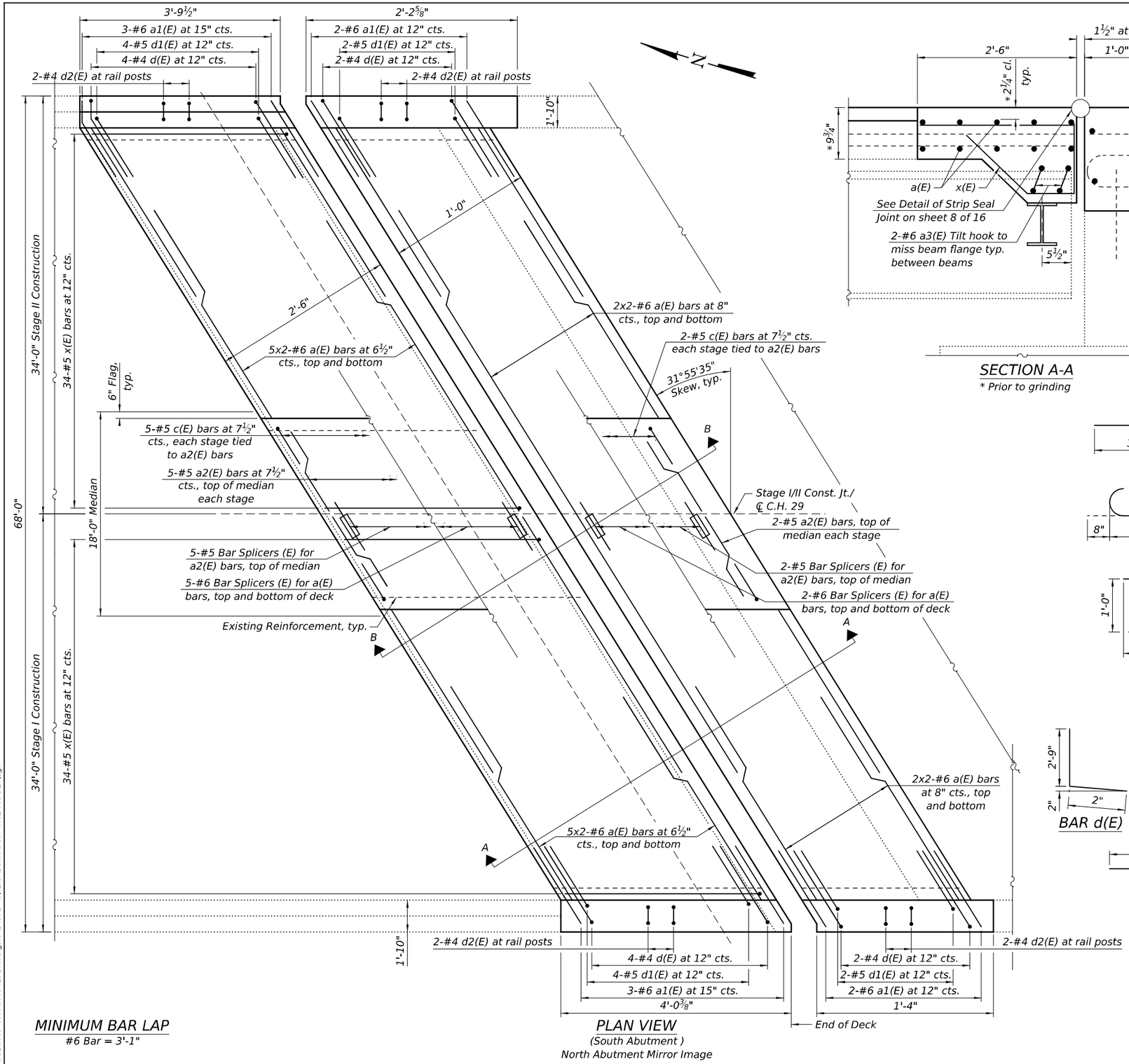

PLAN VIEW

(South Abutment)
North Abutment Mirror Image

MINIMUM BAR LAP

#6 Bar = 3'-1"

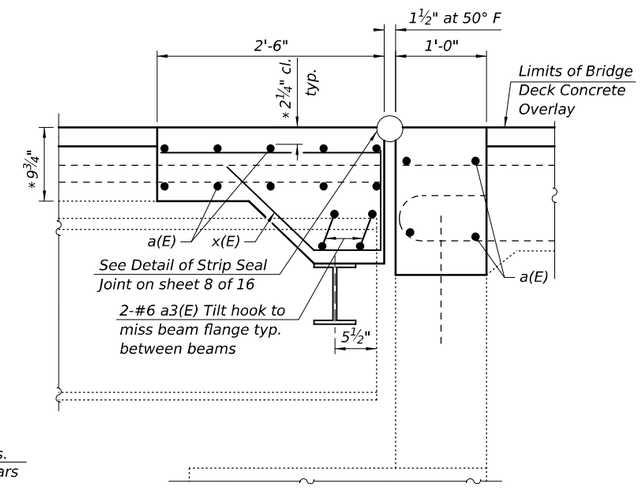

SECTION A-A

* Prior to grinding

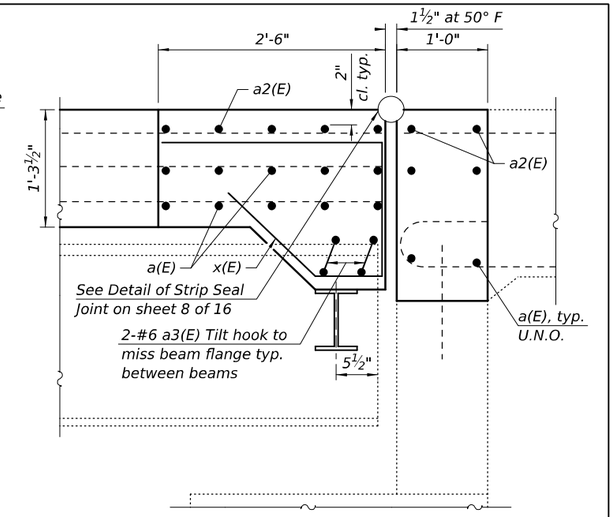

SECTION B-B

BAR a1(E)

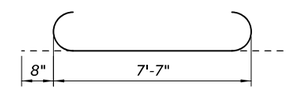

BAR a3(E)

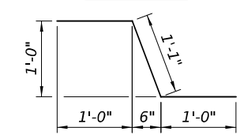

BAR c(E)

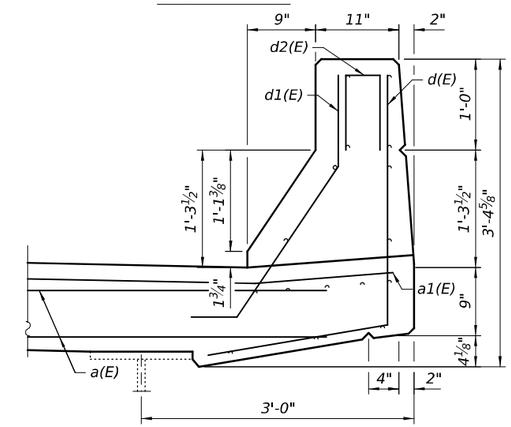

CURB SECTION

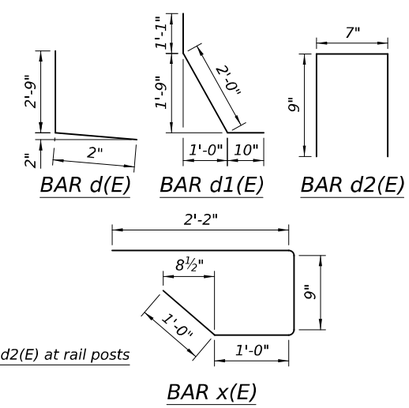

BAR d(E) BAR d1(E) BAR d2(E) BAR x(E)

BILL OF MATERIALS BOTH ENDS

Bar	No.	Size	Length	Shape
a(E)	112	#6	20'-10"	
a1(E)	20	#6	5'-0"	
a2(E)	14	#5	9'-4"	
a3(E)	32	#6	8'-11"	
c(E)	20	#5	3'-1"	
d(E)	24	#4	4'-9"	
d1(E)	24	#5	3'-11"	
d2(E)	16	#4	2'-1"	
x(E)	136	#5	4'-11"	
CONCRETE SUPERSTRUCTURE			CU YD	79.6
REINFORCEMENT BARS, EPOXY COATED			POUND	5,180
BAR SPLICERS			EACH	42

MODEL: Default
FILE NAME: S:\JOL\6300--6399\6346\125\Drawings\CAD\ORD-10.12\CADsheets\057-0162-006-DEP.dgn

STRAND ASSOCIATES
1170 SOUTH HOUBOLT ROAD
JOLIET, ILLINOIS 60431
(815) 744-4200
IDFPR NO. 184-001273

USER NAME = CodyH	DESIGNED - ELR	REVISED -	
	CHECKED - NDR	REVISED -	
PLOT SCALE = 0.167 ' / in.	DRAWN - CJH	REVISED -	
PLOT DATE = 10/22/2025	CHECKED - ELR	REVISED -	

STATE OF ILLINOIS
DEPARTMENT OF TRANSPORTATION

DECK END PLAN
STRUCTURE NO. 057-0162

SHEET 6 OF 17 SHEETS

F.A.I. RTE.	SECTION	COUNTY	TOTAL SHEETS	SHEET NO.
55	(57-3)BR	MCLEAN	126	68
		CONTRACT NO. 70F37		
	ILLINOIS	FED. AID PROJECT		

10/22/2025 4:06:44 PM

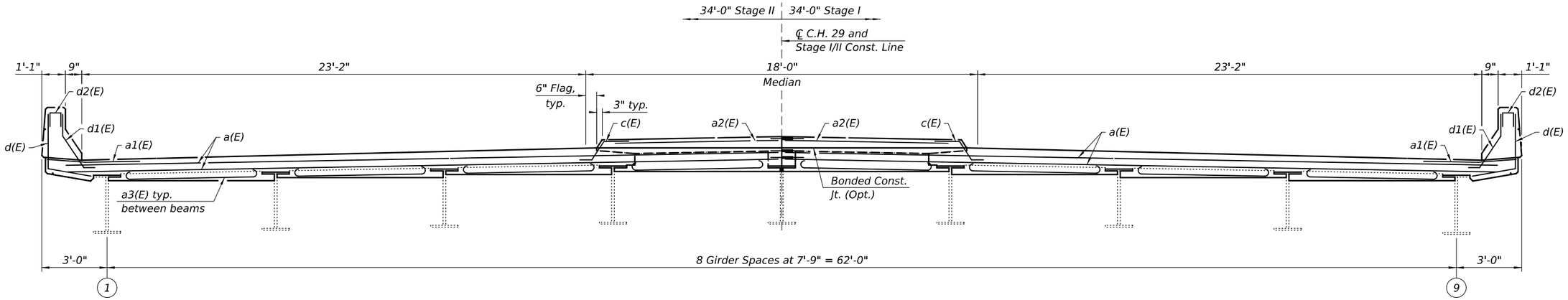

CROSS-SECTION AT END OF DECK

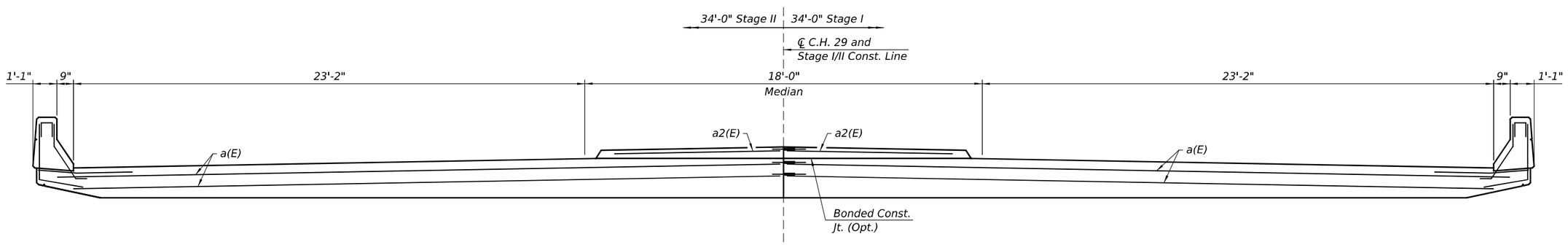

CROSS-SECTION AT END OF APPROACH SPAN

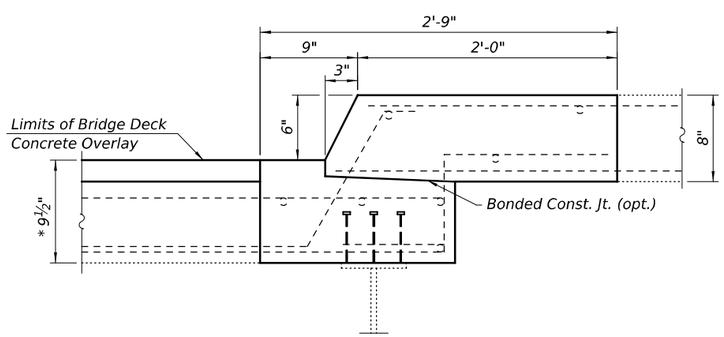

PROPOSED MEDIAN

(Positive Moment Region)

* After grinding

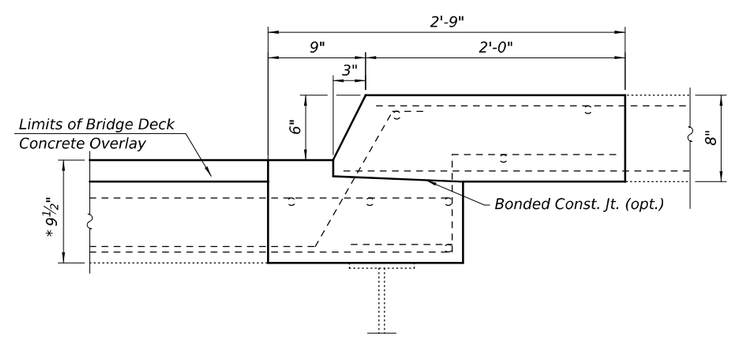

PROPOSED MEDIAN

(Negative Moment Region)

Notes:

1. Quantities included in Bill of Material on sheet 6 of 17.

MODEL: Default
FILE NAME: S:\JOL\63000-63999\63461\25\Drawings\CAD\ORD-10.12\CADsheets\057-0162-007-DCSMD.dgn

STRAND ASSOCIATES
1170 SOUTH HOUBOLT ROAD
JOLIET, ILLINOIS 60431
(815) 744-4200
IDFPR NO. 184-001273

USER NAME = CodyH	DESIGNED - ELR	REVISED -	
	CHECKED - NDR	REVISED -	
PLOT SCALE = 0.167 ' / in.	DRAWN - CJH	REVISED -	
PLOT DATE = 10/22/2025	CHECKED - ELR	REVISED -	

STATE OF ILLINOIS
DEPARTMENT OF TRANSPORTATION

DECK CROSS SECTION AND MEDIAN DETAILS
STRUCTURE NO. 057-0162

SHEET 7 OF 17 SHEETS

F.A.I. RTE.	SECTION	COUNTY	TOTAL SHEETS	SHEET NO.
55	(57-3)BR	MCLEAN	126	69
		CONTRACT NO. 70F37		
	ILLINOIS	FED. AID PROJECT		

10/22/2025 4:06:45 PM

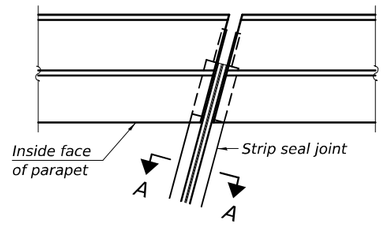

FOR SKEWS ≤ 30°

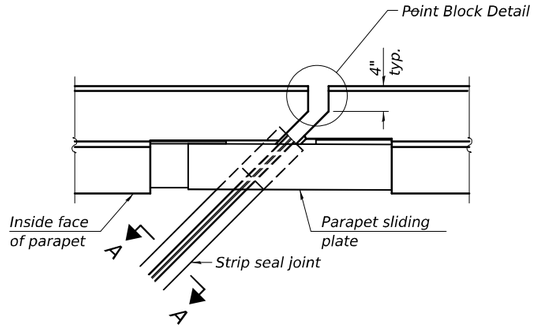

FOR SKEWS > 30°

PLAN AT PARAPET

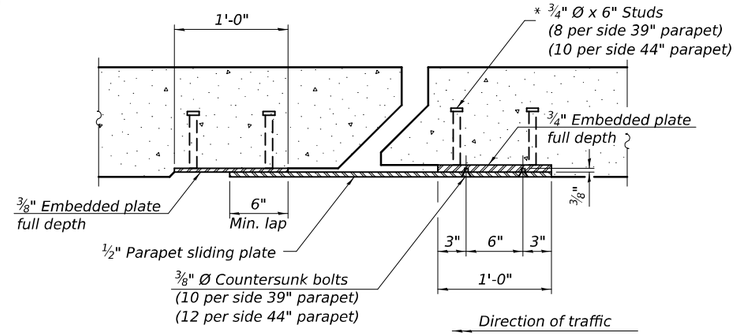

SECTION B-B

(¾" ∅ countersunk bolts extending into concrete shall have hex nuts tack welded to the back of the embedded plates with end caps provided.)

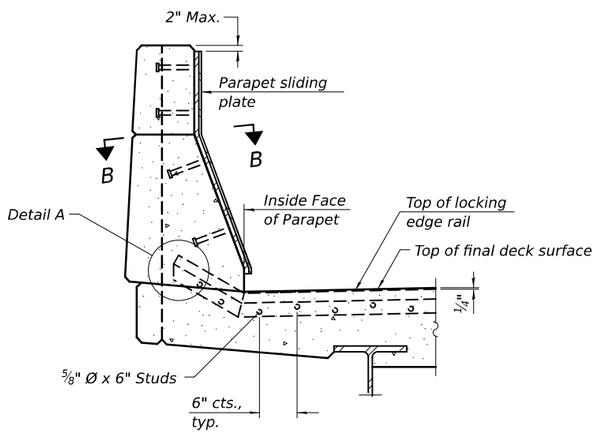

SECTION AT PARAPET

(Skews > 30° shown. Skews ≤ 30° similar except as shown in plan view.)

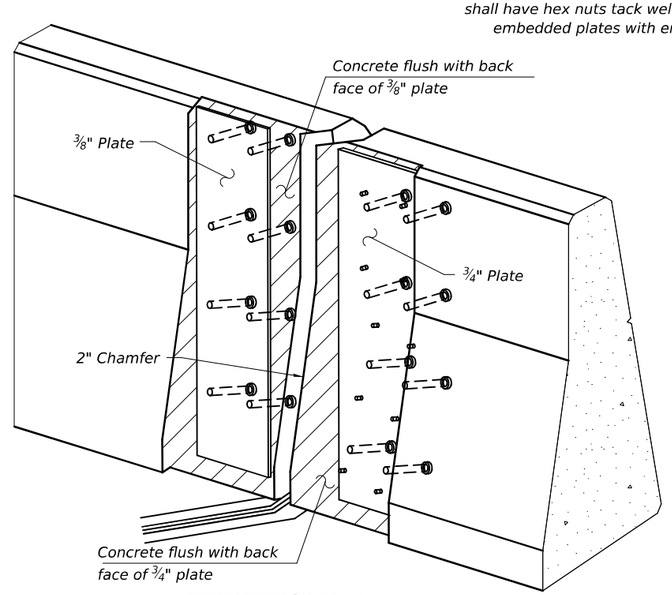

TRIMETRIC VIEW

(Showing embedded plates only)

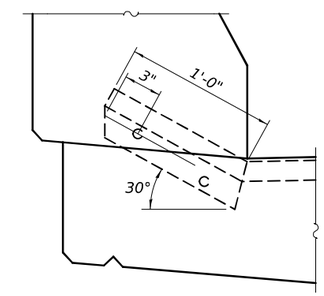

DETAIL A

(Kick-up at parapet locations shown. See sheet of for kick-up at curb locations

Notes:

The strip seal shall be made continuous and shall have a minimum thickness of ¼". The configuration of the strip seal shall match the configuration of the locking edge rails. Open or "webbed" strip seal gland configurations are not permitted. The gland shall be sized for a maximum rated movement of 4 inches.

The locking edge rails depicted are configured for typical applications and are conceptual only. The actual configuration of the locking edge rails and matching strip seal may vary from manufacturer to manufacturer provided they fit the application and meet the minimum anchorage shown. Flanged edge rails, however, will not be allowed. Locking edge rails may exceed the 4½" maximum depth provided the anchorage system is revised according to the manufacturer's recommendation.

The manufacturer's recommended installation methods shall be followed.

All steel components shall be galvanized after fabrication according to Article 520.03 of the Standard Specifications.

The Maximum space between locking edge rail segments shall be c" and sealed with a suitable sealant; however, any rail joint within 10' measured perpendicular to the face of the curb or parapet shall be welded as shown in the locking edge rail splice detail.

Cost of parapet sliding plates, embedded plates, and anchorage studs included with Preformed Joint Strip Seal.

39" constant slope barrier shown, 44" constant slope barrier similar as noted.

The concrete opening below the strip seal will vary based on the locking edge rail chosen by the Contractor. Deck and parapet lengths shown elsewhere in the plans are dimensioned to the concrete opening, not the joint opening, and are based on the rolled locking edge rail. If the Contractor elects to use a different locking edge rail, dimensional adjustments may be required. One exception to this would be the strip seal joint at the end of the precast bridge approach slab. For these cases the pavement connector length shall be adjusted, not the length of the bridge approach slab.

BILL OF MATERIAL

ITEM	UNIT	QUANTITY
PREFORMED JOINT STRIP SEAL	FOOT	156.0

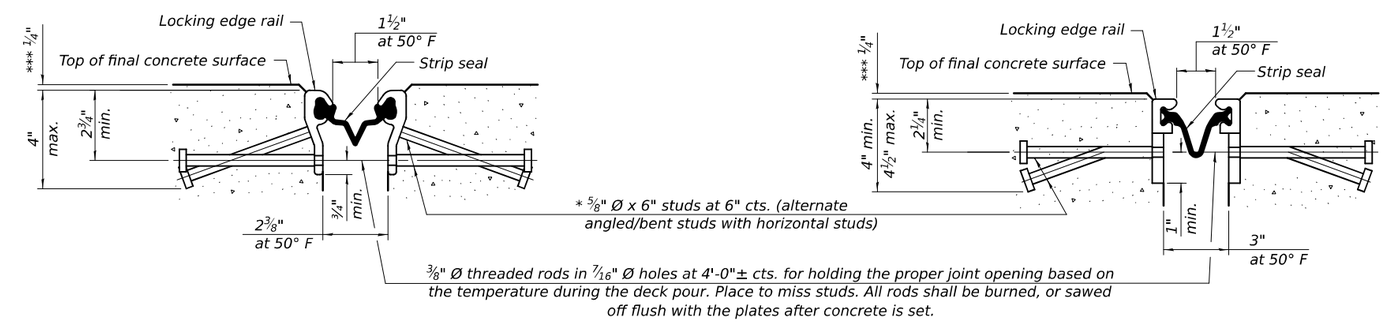

SHOWING ROLLED RAIL JOINT

SHOWING WELDED RAIL JOINT

SECTION A-A

* Granular or solid flux filled headed studs conforming to Article 1006.32 of the Std. Specs., automatically end welded.

*** After grinding

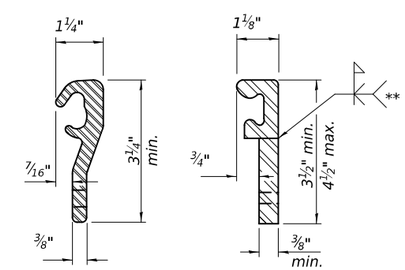

ROLLED (EXTRUDED) RAIL

WELDED RAIL

LOCKING EDGE RAILS

** Back gouge not required if complete joint penetration is verified by mock-up.

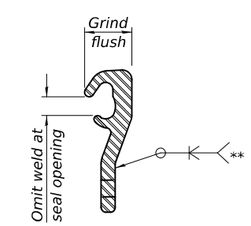

LOCKING EDGE RAIL SPLICE

The inside of the locking edge rail groove shall be free of weld residue. Rolled rail shown, welded rail similar.

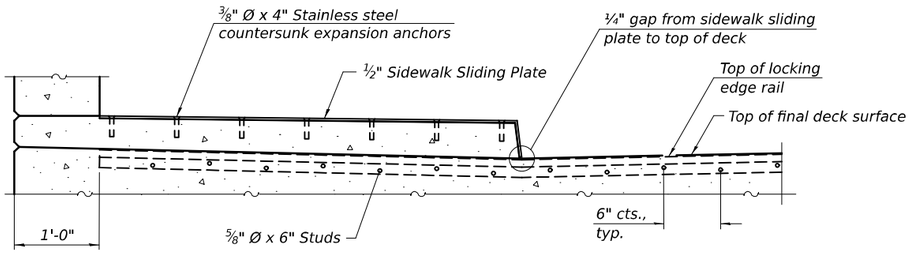

SECTION AT RAISED SIDEWALK

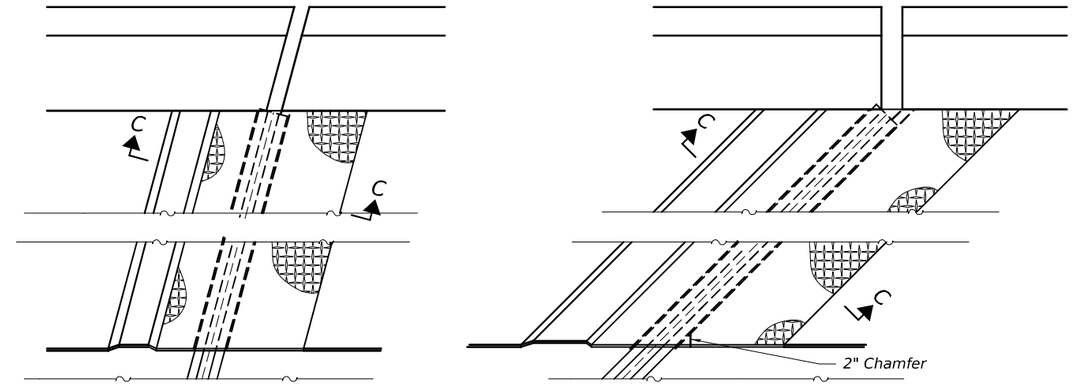

(FOR SKEWS ≤ 30°)

(FOR SKEWS > 30°)

PLAN AT RAISED SIDEWALK

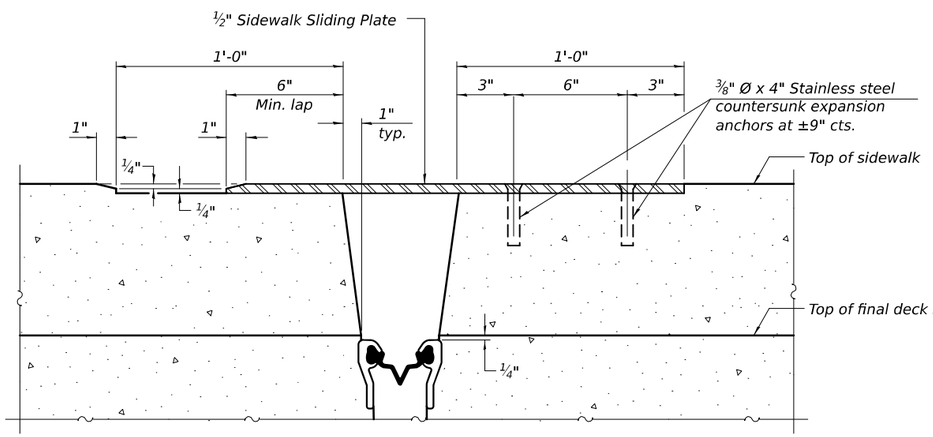

SECTION C-C

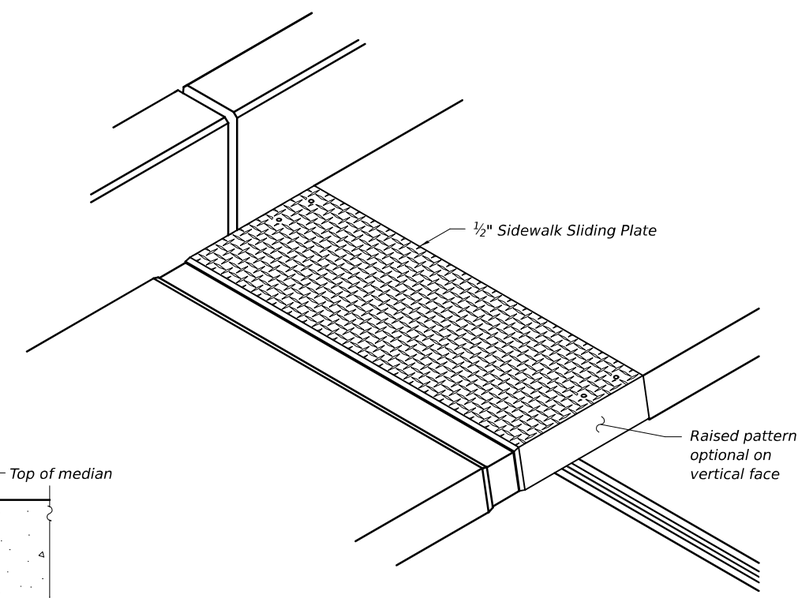

TRIMETRIC VIEW

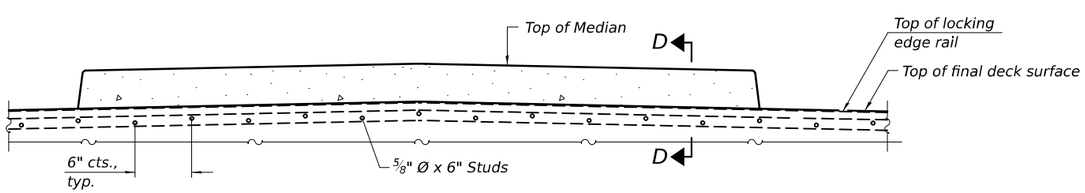

SECTION AT MEDIAN

For skews > 30°, chamfer acute corners 2" similar to sidewalk.

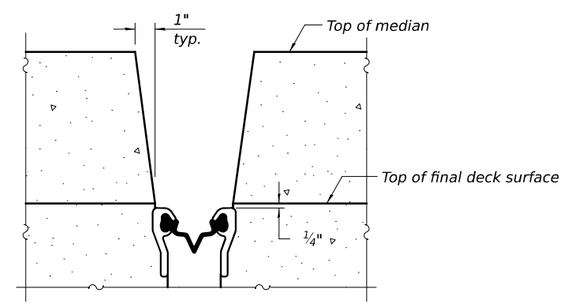

SECTION D-D

(at Rt. ∠'s)

EJ-SS-S 4-4-2025

MODEL: Default
FILE NAME: S:\JOL\6300--8399\6346\125\Drawings\CAD\ORD-10.12\CADsheets\057-0162-009-SSM.dgn

STRAND ASSOCIATES 1170 SOUTH HOUBOLT ROAD JOLIET, ILLINOIS 60431 (815) 744-4200 IDFPR NO. 184-001273

USER NAME = CodyH	DESIGNED -	REVISED -	
	CHECKED -	REVISED -	
PLOT SCALE = 0.167 ' / in.	DRAWN - CJH	REVISED -	
PLOT DATE = 10/22/2025	CHECKED - ELR	REVISED -	

STATE OF ILLINOIS
DEPARTMENT OF TRANSPORTATION

PREFORMED JOINT STRIP SEAL (2 OF 2)
STRUCTURE NO. 057-0162

SHEET 9 OF 17 SHEETS

F.A.I. RTE.	SECTION	COUNTY	TOTAL SHEETS	SHEET NO.
55	(57-3)BR	MCLEAN	126	71
		CONTRACT NO. 70F37		
	ILLINOIS	FED. AID PROJECT		

10/22/2025 4:06:49 PM

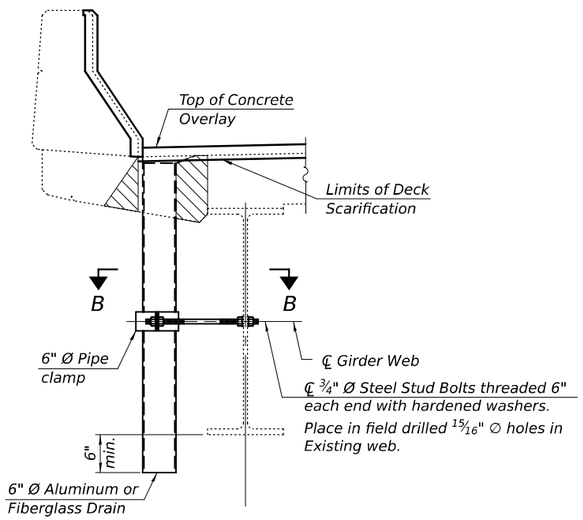

DRAIN REPLACEMENT DETAIL

(12 Location, see Plan)

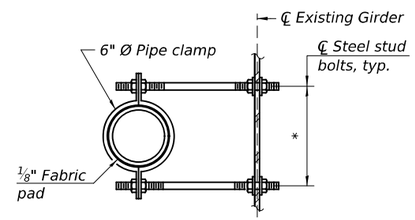

SECTION B-B

*Dimension as required by pipe clamp

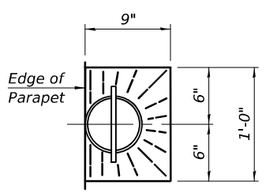

TOP PLAN

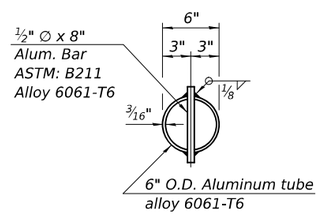

TOP PLAN

(Showing aluminum tube)

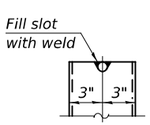

ALUMINUM TUBE

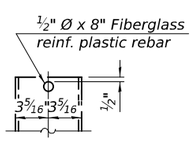

FIBERGLASS PIPE

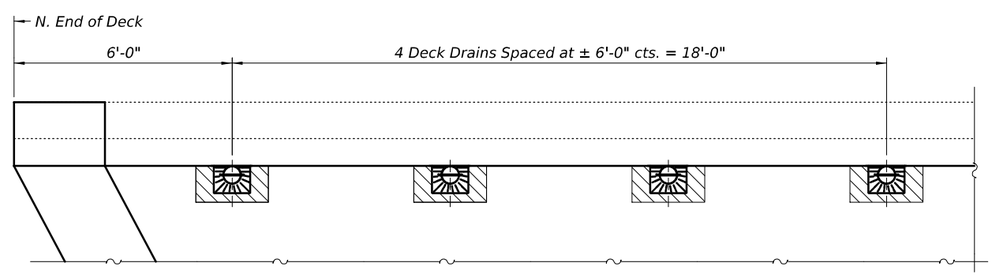

DRAINAGE PLACEMENT PLAN

(Drawn for North-East corner of deck. All other corners similar.)

N

LEGEND

Deck Slab Repair (Full Depth, Type I)

Notes:

1. Fiberglass pipe shall conform to ASTM D 2996, with short-time rupture strength hoop tensile stress of 30,000 p.s.i. minimum.
2. The clamping device shall be galvanized according to AASHTO M 232. Cost of clamping device included with Floor Drains.

BILL OF MATERIALS

ITEM	UNIT	QUANTITY
FLOOR DRAINS	EACH	16

MODEL: Default
FILE NAME: S:\JOL\6300--639\96346\125\Drawings\CAD\ORD-10.12\CADsheets\057-0162-010-DD.dgn

STRAND ASSOCIATES®
1170 SOUTH HOUBOLT ROAD
JOLIET, ILLINOIS 60431
(815) 744-4200
IDFPR NO. 184-001273

USER NAME = CodyH	DESIGNED - ELR	REVISED -	
	CHECKED - NDR	REVISED -	
PLOT SCALE = 0.167 ' / in.	DRAWN - CJH	REVISED -	
PLOT DATE = 10/22/2025	CHECKED - ELR	REVISED -	

STATE OF ILLINOIS
DEPARTMENT OF TRANSPORTATION

DRAINAGE DETAILS
STRUCTURE NO. 057-0162

SHEET 10 OF 17 SHEETS

F.A.I. RTE.	SECTION	COUNTY	TOTAL SHEETS	SHEET NO.
55	(57-3)BR	MCLEAN	126	72

CONTRACT NO. 70F37

ILLINOIS FED. AID PROJECT

10/22/2025 4:06:50 PM

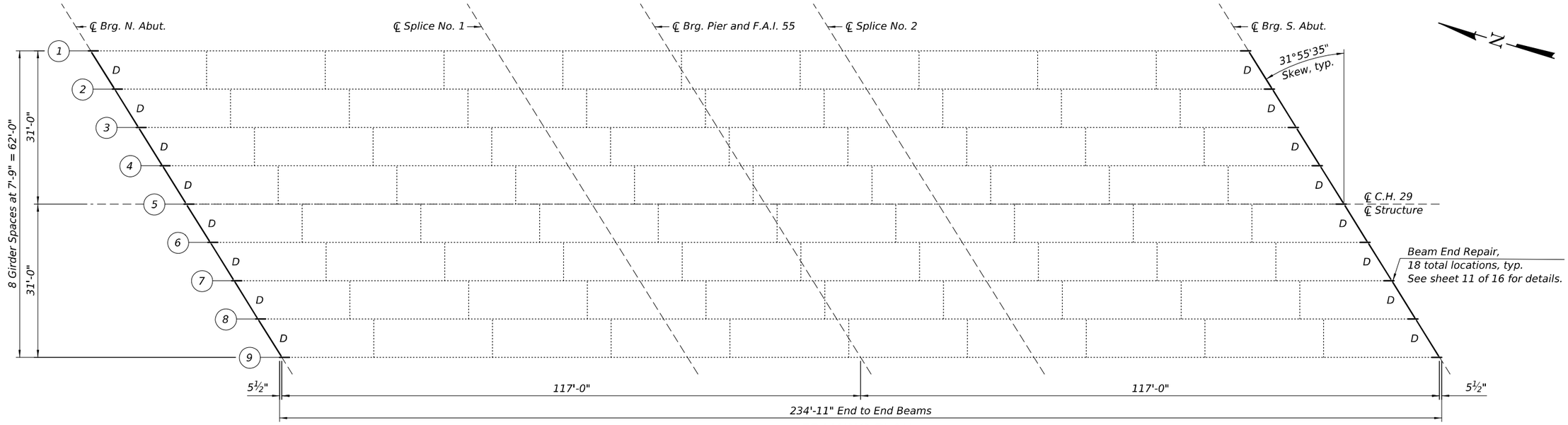

FRAMING PLAN

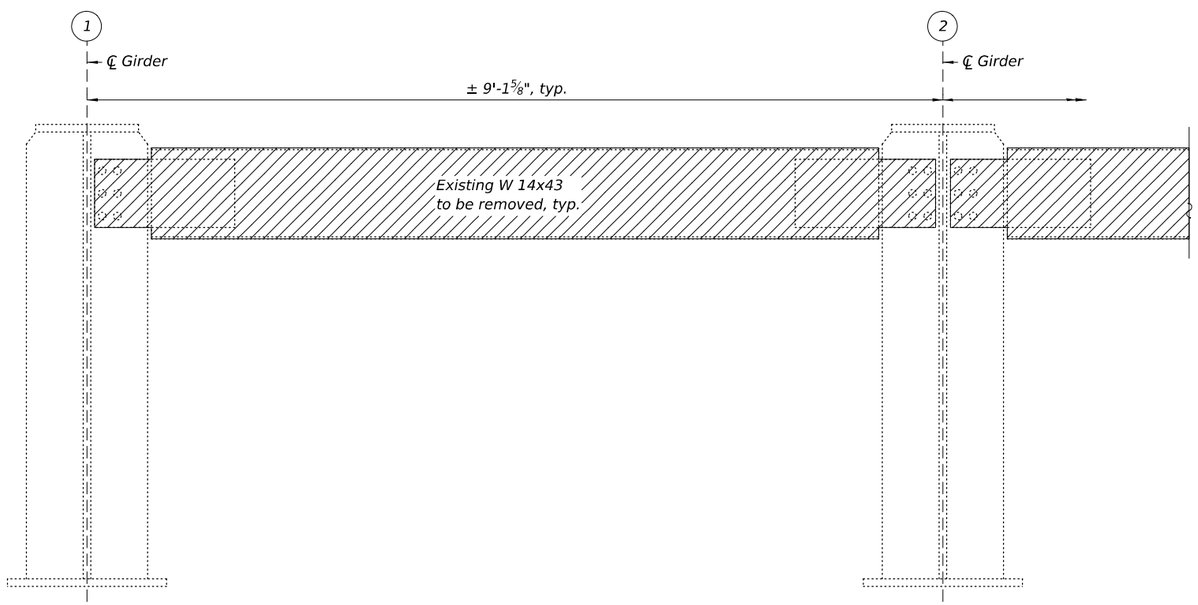

EXISTING END DIAPHRAGM REMOVAL, D

(16 total locations, looking South)

Notes:

1. For existing details and dimensions not shown on this drawing see existing plans.
2. The existing clip angles shall be removed through mechanical means and all remaining weld material shall be ground flush with the existing web. Torch cutting of this clip angle is not allowed.
3. All grinding shall occur in the direction of the weld and not across it. The final ground surfaces shall be inspected for cracks using dye penetrant or magnetic particle testing after removal. Any cracks that are discovered shall be identified and reported to the Bureau of Bridges and Structures for further disposition.
4. Ground surfaces shall be spot cleaned and primed in accordance with the general notes. The cost of cleaning and priming is included with Structural Steel Repair and in accordance with the Special Provision "Cleaning and Painting Contact Surface Areas of Existing Steel Structures".

BILL OF MATERIALS

ITEM	UNIT	QUANTITY
STRUCTURAL STEEL REMOVAL	POUND	6,240

STRAND ASSOCIATES®
1170 SOUTH HOUBOLT ROAD
JOLIET, ILLINOIS 60431
(815) 744-4200
IDFPR NO. 184-001273

USER NAME = CodyH	DESIGNED - ELR	REVISED -	
	CHECKED - NDR	REVISED -	
PLOT SCALE = 0.167 ' / in.	DRAWN - CJH	REVISED -	
PLOT DATE = 10/22/2025	CHECKED - ELR	REVISED -	

STATE OF ILLINOIS
DEPARTMENT OF TRANSPORTATION

DIAPHRAGM REMOVAL
STRUCTURE NO. 057-0162

SHEET 11 OF 17 SHEETS

F.A.I. RTE.	SECTION	COUNTY	TOTAL SHEETS	SHEET NO.
55	(57-3)BR	MCLEAN	126	73

CONTRACT NO. 70F37

ILLINOIS FED. AID PROJECT

MODEL: Default
FILE NAME: S:\JOL\6300--639\9634\125\Drawings\CAD\ORD-10.12\CADsheets\057-0162-011-DR.dgn
10/22/2025 4:06:50 PM

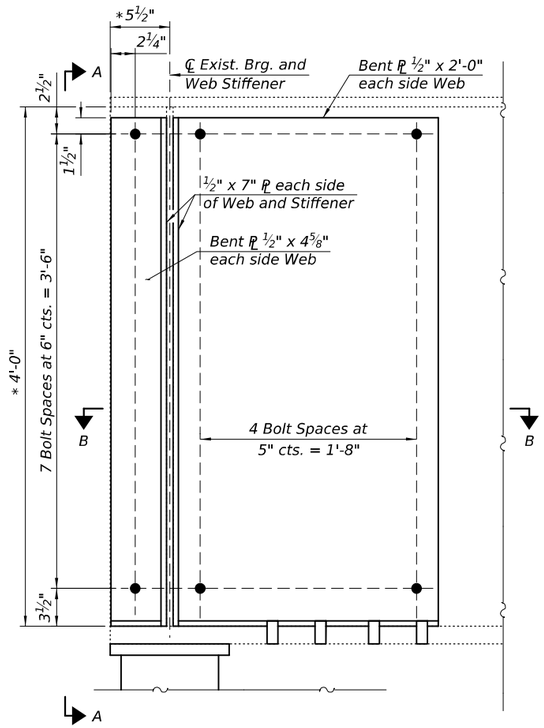

BEAM END REPAIR DETAIL

(18 Locations)

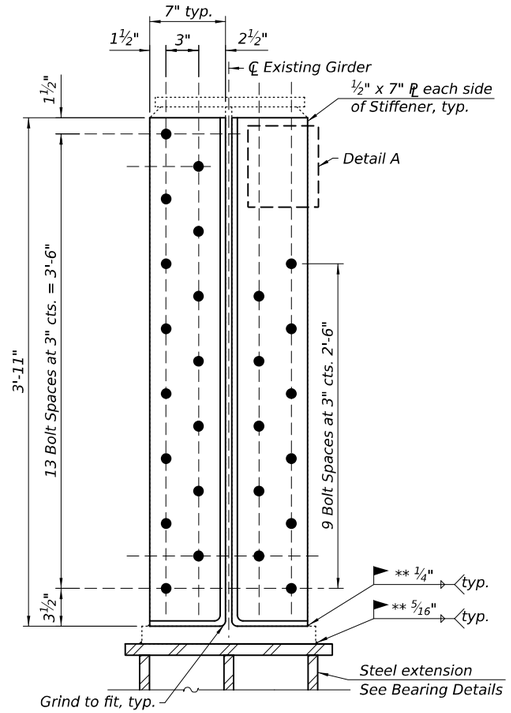

SECTION A-A

(Drawn for fascia beam, interior beams similar)

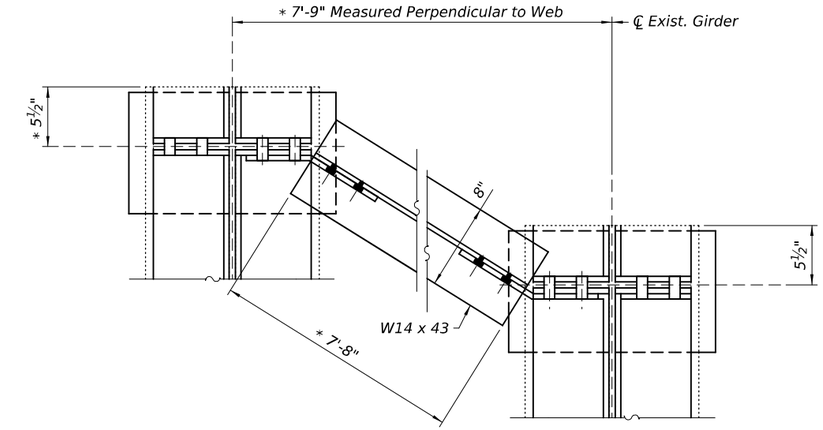

DIAPHRAGM REPLACEMENT DETAIL

(16 Required)

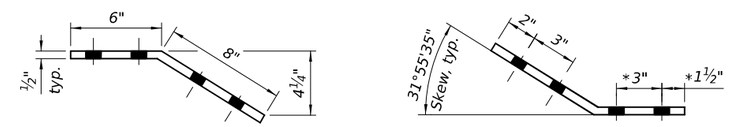

BENT CONNECTION PLATE DETAILS

(PL ½" x 10" x 1'-1" - 32 Required)

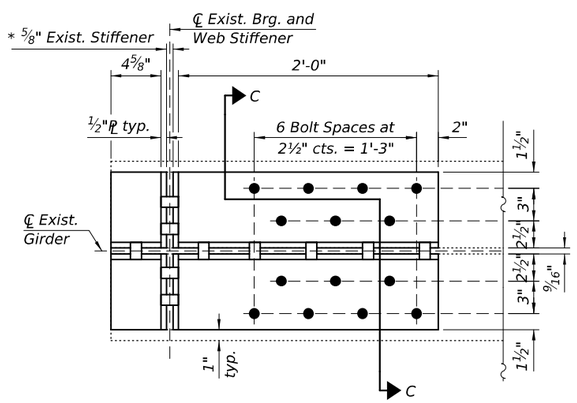

SECTION B-B

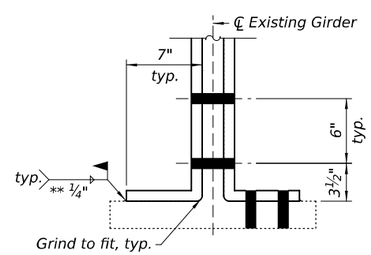

SECTION C-C

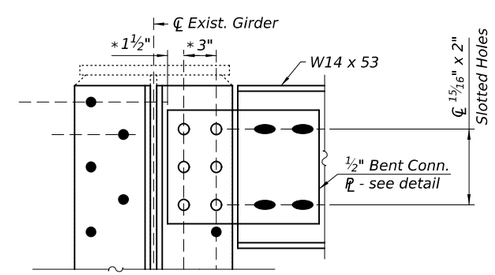

DETAIL A

BOLT HOLE LEGEND

● - Shop Drilled Holes in New Steel

○ - Field Drilled Holes in New or Existing Steel using connection plate shop drilled holes as a template, U.N.O.

** Stop welds ¼" (± ⅛") from edges as shown typ.

Notes:

* 1. Prior to ordering any materials, the Contractor shall field verify all dimensions.

2. For dimensions not shown on plans, see existing drawings.

3. Diaphragm connection holes shall be 15/16" ∅ for ¾" bolts. Two hardened washers shall be required at diaphragm connections, U.N.O.

BILL OF MATERIAL

ITEM	UNIT	QUANTITY
FURNISHING AND ERECTING STRUCTURAL STEEL	POUND	6,830
STRUCTURAL STEEL REPAIR	POUND	12,940

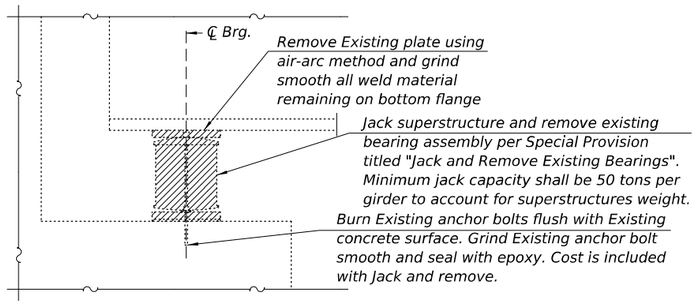

EXISTING BEARING DETAIL AT ABUTMENT

(18 Total)

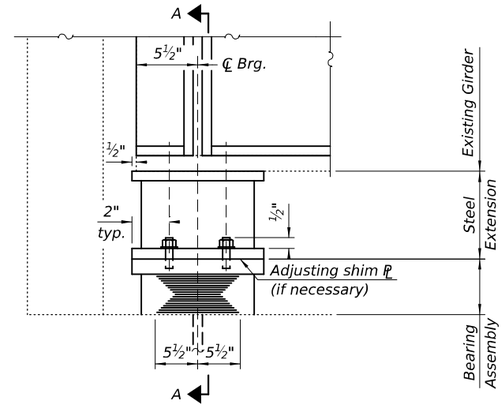

ELEVATION

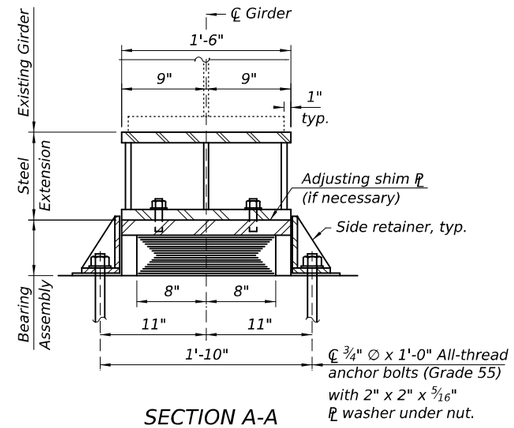

SECTION A-A

TYPE I ELASTOMERIC EXP. BRG. AT ABUTMENTS

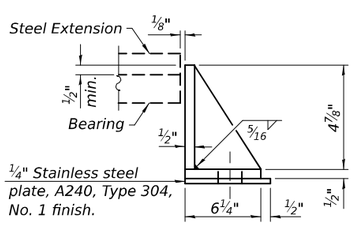

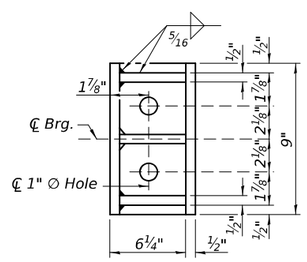

SIDE RETAINER A

Equivalent rolled angle with stiffeners will be allowed in lieu of welded plates.

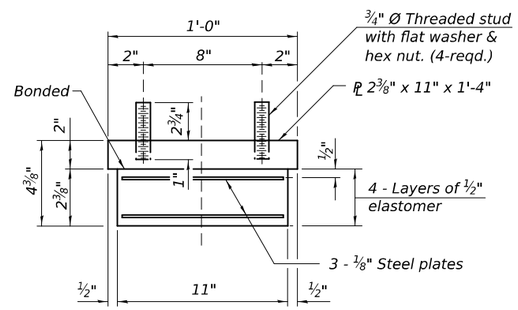

BEARING ASSEMBLY

Note:
Shim plates shall not be placed under bearing assembly.

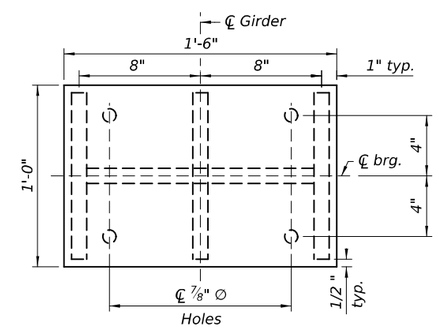

PLAN STEEL BEARING EXTENSION

GIRDER REACTION

		Abutment
R_{DL}	(k)	62.1
R_{SL}	(k)	50.6
R_{I}	(k)	10.5
R_{total}	(k)	123.1

Notes:

* 1. Prior to ordering any material, the Contractor shall field verify all steel bearing extension heights.

2. Side retainers and stainless steel plates shall be included in the cost of Elastomeric Bearing Assembly, Type I.

3. The structural steel plates of the Bearing Assembly shall conform to the requirements of AASHTO M270 Grade 50.

4. Two ⅛" adjusting shims shall be provided for each bearing in addition to all other plates or shims and placed as shown on bearing details.

5. The cost of steel extensions and all connection bolts are included with the cost of Furnishing and Erecting Structural Steel.

6. If the analysis submitted by the Contractor for the jacking system to be used shows temporary stiffeners are required to prevent web crippling or buckling, the stiffeners shall be steel and bolted to the web. If stiffeners are not required, hardwood timbers shall be installed tightly between the top and bottom flange to prevent flange rotation.

7. Diaphragms shall not be used as load carrying members during beam jacking.

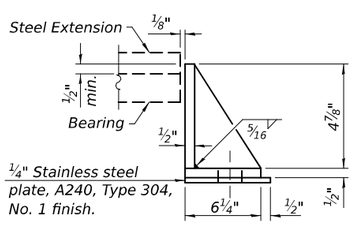

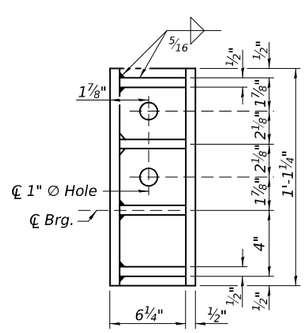

SIDE RETAINER B

Equivalent rolled angle with stiffeners will be allowed in lieu of welded plates.

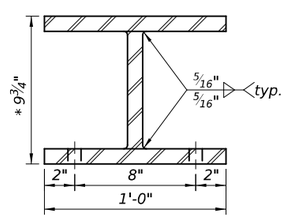

SECTION B-B

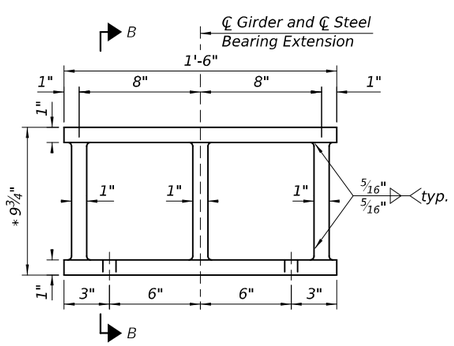

ELEVATION STEEL BEARING EXTENSION

BILL OF MATERIAL

ITEM	UNIT	QUANTITY
FURNISHING AND ERECTING STRUCTURAL STEEL	POUND	4,110
ELASTOMERIC BEARING ASSEMBLY, TYPE I	EACH	18
ANCHOR BOLTS, 3/4"	EACH	72
JACK AND REMOVE EXISTING BEARINGS	EACH	18

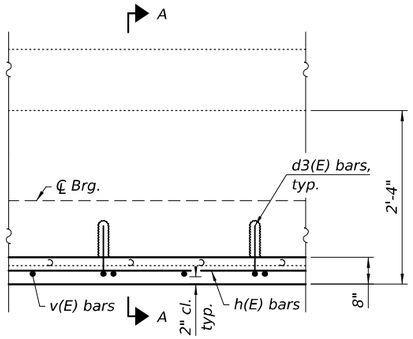

PARTIAL PLAN - ABUTMENT

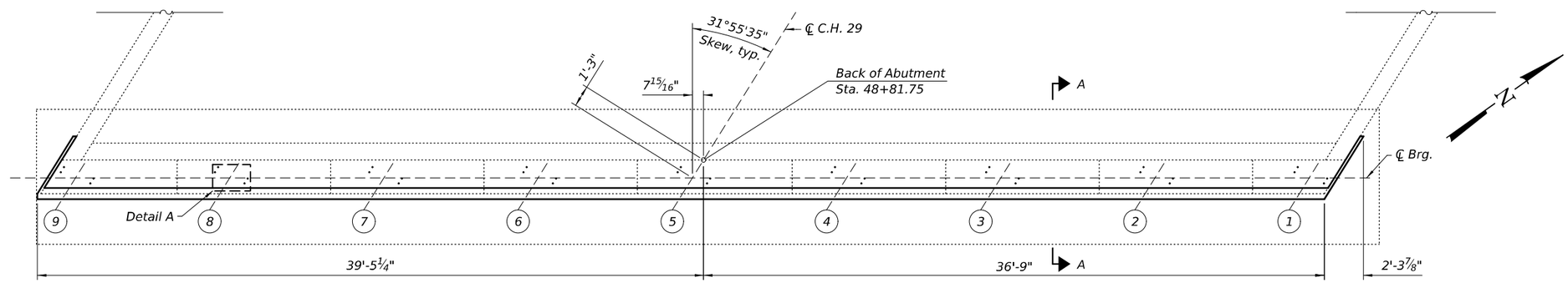

NORTH ABUTMENT PROPOESED PLAN

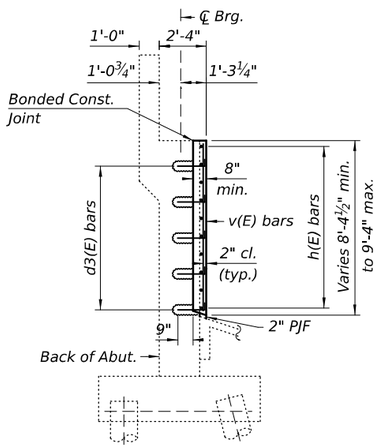

SECTION A-A PROPOSED

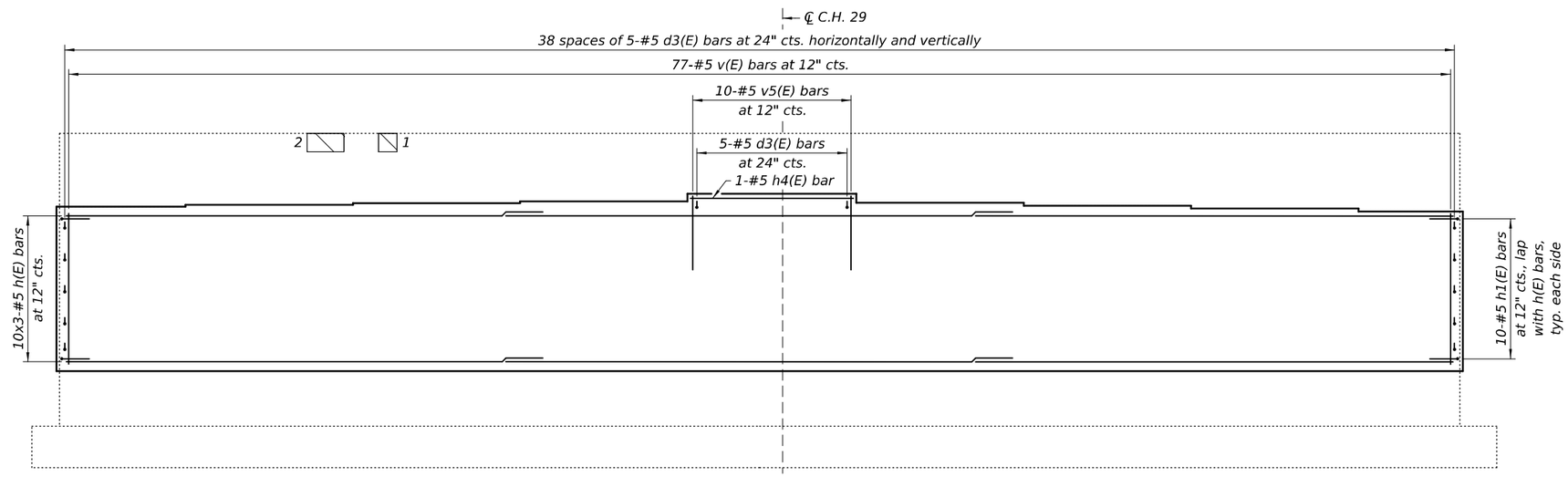

NORTH ABUTMENT PROPOSED ELEVATION

(Looking Northwest)

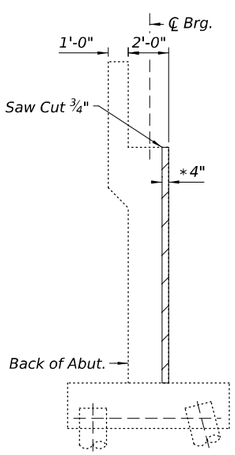

SECTION A-A REMOVAL

* Remove Concrete to min. 1" behind first layer of reinforcement

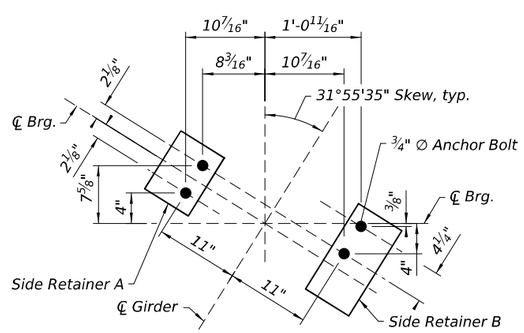

ANCHOR BOLT LOCATION PLAN

DETAIL A

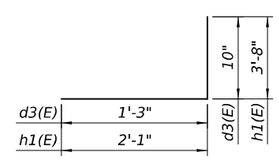

BAR d3(E) AND h1(E)

LEGEND

Concrete Removal

Structural Repair of Concrete (Depth Equal to or Less Than 5 Inches) (SQ FT)

Notes:

1. Epoxy grout bars in 9" min. holes according to Article 584 of the Standard Specifications. Cost included with Reinforcement Bars, Epoxy Coated.
2. Bars indicated thus 20x3-#5 etc. indicates 20 lines of bars with 3 lengths per line.
3. Existing reinforcement bars extending into the removal area shall be cleaned, straightened, and incorporated into the new construction. Any reinforcement bars that are damaged during concrete removal shall be replaced with an approved bar splicer or anchorage system at the contractor's expense.

MINIMUM BAR LAP

#5 Bar = 2'-1"

BILL OF MATERIALS

Bar	No.	Size	Length	Shape
d3(E)	195	#5	2'-1"	
h(E)	30	#5	26'-10"	
h1(E)	20	#5	5'-9"	
h4(E)	1	#5	8'-10"	
v(E)	77	#5	8'-2"	
v5(E)	10	#5	4'-0"	
CONCRETE REMOVAL			CU YD	8.6
CONCRETE STRUCTURES			CU YD	17.1
REINFORCEMENT BARS, EPOXY COATED			POUND	2,100
STRUCTURAL REPAIR OF CONCRETE (DEPTH EQUAL TO OR LESS THAN 5 INCHES)			SQ FT	3

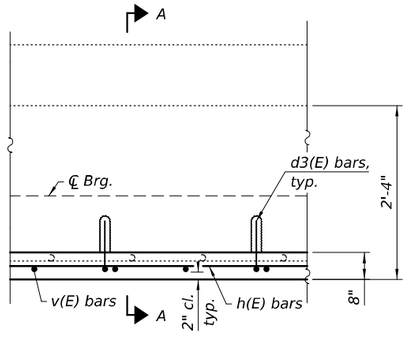

PARTIAL PLAN - ABUTMENT

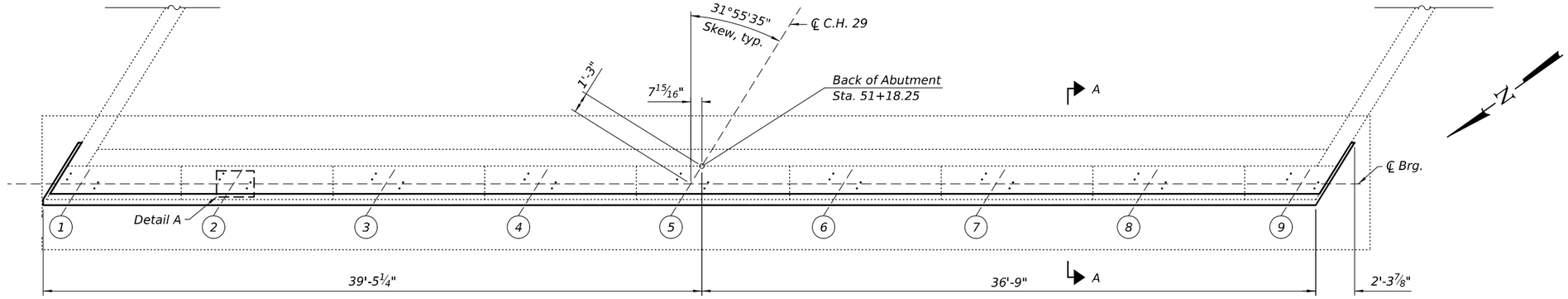

SOUTH ABUTMENT PROPOSED PLAN

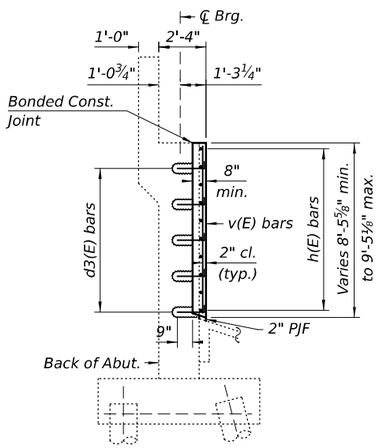

SECTION A-A PROPOSED

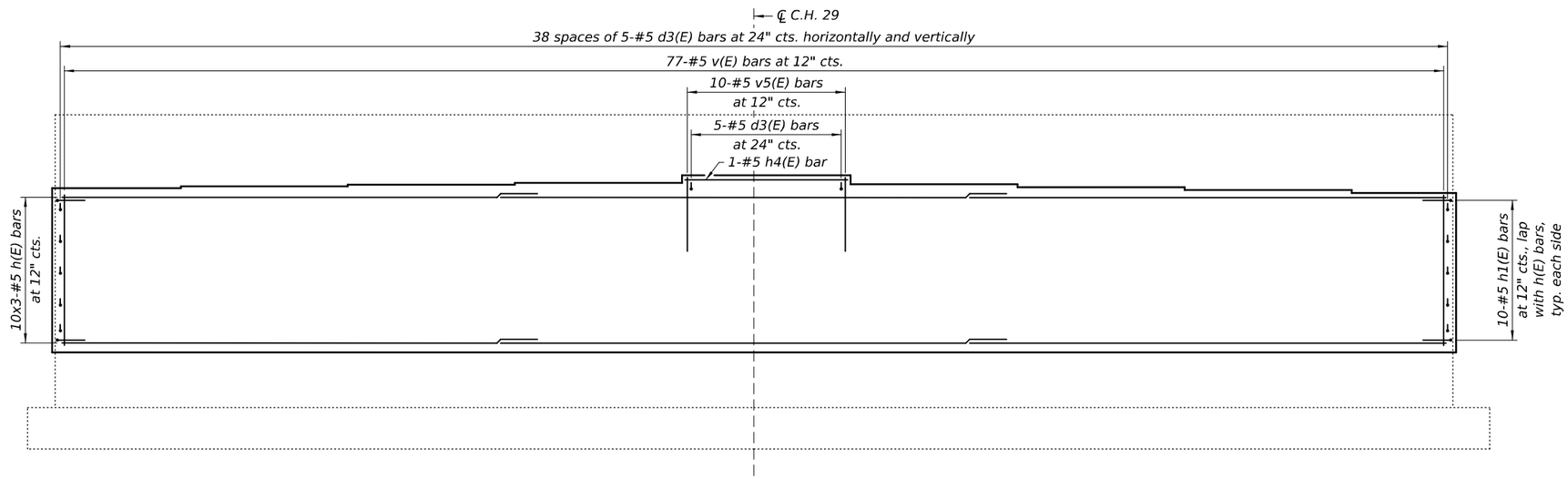

SOUTH ABUTMENT PROPOSED ELEVATION

(Looking Southeast)

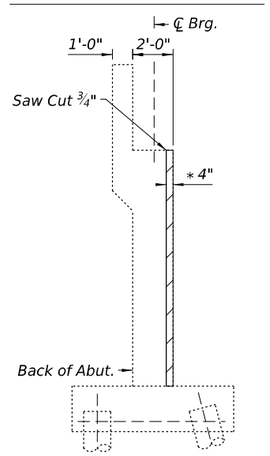

SECTION A-A REMOVAL

* Remove Concrete to min. 1" behind first layer of reinforcement

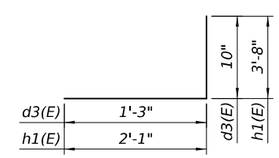

BAR d3(E) AND h1(E)

LEGEND

Concrete Removal

Notes:

1. Epoxy grout bars in 9" min. holes according to Article 584 of the Standard Specifications. Cost included with Reinforcement Bars, Epoxy Coated.
2. Bars indicated thus 20x3-#5 etc. indicates 20 lines of bars with 3 lengths per line.
3. Existing reinforcement bars extending into the removal area shall be cleaned, straightened, and incorporated into the new construction. Any reinforcement bars that are damaged during concrete removal shall be replaced with an approved bar splicer or anchorage system at the contractor's expense.
4. See sheet 13 of 16 for Detail A.

MINIMUM BAR LAP

#5 Bar = 2'-1"

BILL OF MATERIALS

Bar	No.	Size	Length	Shape
d3(E)	195	#5	2'-1"	
h(E)	30	#5	26'-10"	
h1(E)	20	#5	5'-9"	
h4(E)	1	#5	8'-10"	
v(E)	77	#5	8'-2"	
v5(E)	10	#5	4'-0"	
CONCRETE REMOVAL			CU YD	8.6
CONCRETE STRUCTURES			CU YD	17.1
REINFORCEMENT BARS, EPOXY COATED			POUND	2,100

MODEL: Default
FILE NAME: S:\JOL\6300-639\9634B\125\Drawings\CAD\ORD-10.12\CADsheets\057-0162-015-CRRSB.dgn

STRAND ASSOCIATES
1170 SOUTH HOUBOLT ROAD
JOLIET, ILLINOIS 60431
(815) 744-4200
IDFPR NO. 184-001273

USER NAME = CodyH	DESIGNED - ELR	REVISED -	
	CHECKED - NDR	REVISED -	
PLOT SCALE = 0.167 ' / in.	DRAWN - CJH	REVISED -	
PLOT DATE = 10/22/2025	CHECKED - ELR	REVISED -	

STATE OF ILLINOIS
DEPARTMENT OF TRANSPORTATION

CONCRETE REMOVAL REPAIR (2 OF 2)
STRUCTURE NO. 057-0162

SHEET 15 OF 17 SHEETS

F.A.I. RTE.	SECTION	COUNTY	TOTAL SHEETS	SHEET NO.
55	(57-3)BR	MCLEAN	126	77

CONTRACT NO. 70F37

ILLINOIS FED. AID PROJECT

10/22/2025 4:06:55 PM

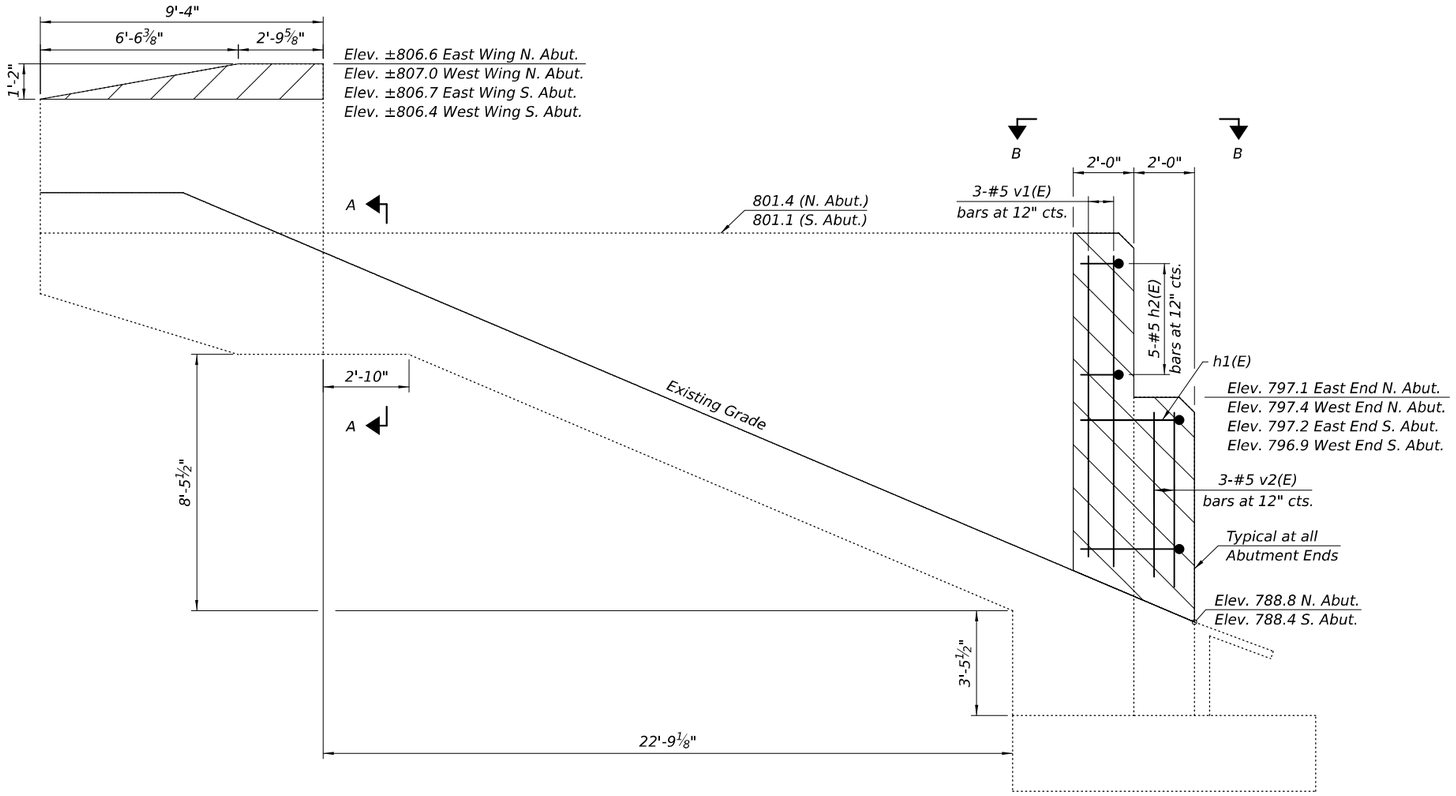

SIDE ELEVATION

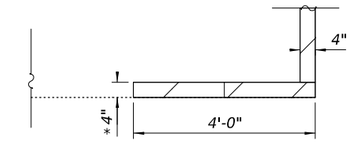

SECTION B-B REMOVAL

* Remove concrete to min. 1" behind first layer of reinforcement

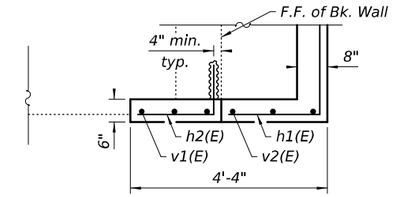

SECTION B-B PROPOSED

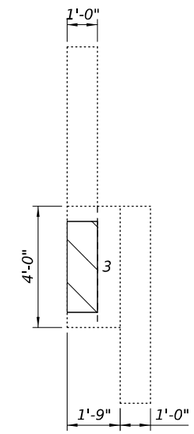

SECTION A-A
(West End N. Abut.)

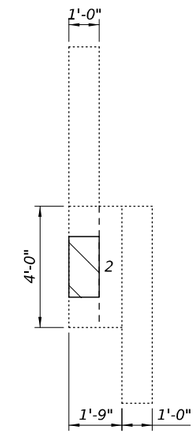

SECTION A-A
(West End S. Abut.)

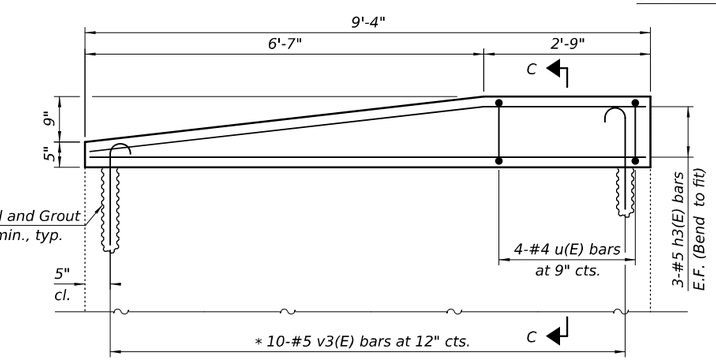

PROPOSED WINGWALL ELEVATION

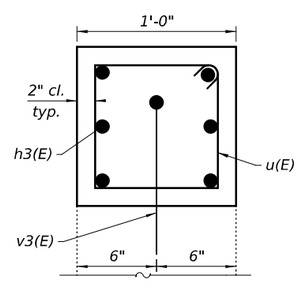

SECTION C-C

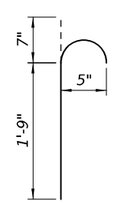

BAR v3(E)

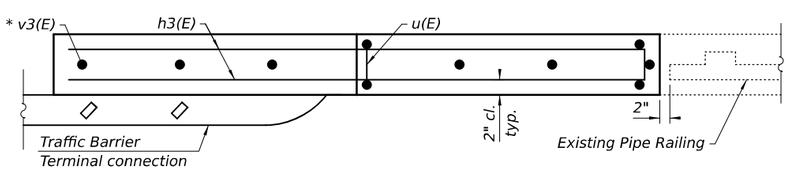

PROPOSED WINGWALL PLAN

* Contractor may chose to cut straight leg of v3(E) bars to fit or drill and grout additional depth as required to maintain clearance through tapered section of wing

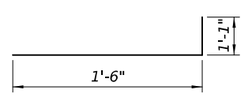

BAR h2(E)

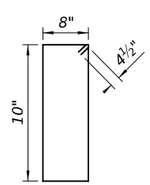

BAR u(E)

LEGEND

Concrete Removal (CU YD)

Notes:

1. Existing vertical reinforcement in wing walls shall be cleaned and incorporated into new construction. Cost included in the cost of "Concrete Removal".
2. Any vertical reinforcement bars that are damaged during concrete removal operations shall be repaired or replaced using an approved bar splicer or anchorage system. Cost included in the cost of "Concrete Removal".
3. The elevations and dimensions shown are calculated based off existing plans and field measurements. The Contractor shall verify in field and make necessary adjustments prior to removals, repairs, or ordering of materials. For additional information, see selected Existing Drawings.
4. Epoxy grout bars in 9" min. holes according to Article 584 of the Standard Specifications. Cost included with Reinforcement Bars, Epoxy Coated.

BILL OF MATERIALS

Bar	No.	Size	Length	Shape
h2(E)	20	#5	2'-7"	
h3(E)	24	#5	9'-0"	
u(E)	16	#4	3'-9"	
v1(E)	12	#5	11'-8"	
v2(E)	12	#5	7'-8"	
v3(E)	40	#4	2'-3"	
CONCRETE REMOVAL			CU YD	3.5
CONCRETE STRUCTURES			CU YD	4.9
REINFORCEMENT BARS, EPOXY COATED			POUND	630
STRUCTURAL REPAIR OF CONCRETE (DEPTH EQUAL TO OR LESS THAN 5 INCHES)			SQ FT	5

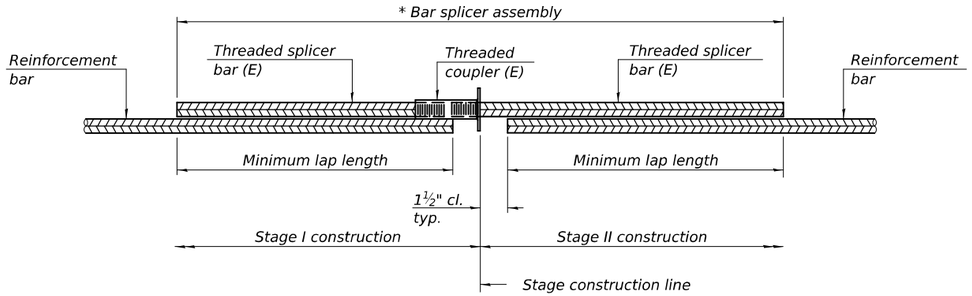

STANDARD BAR SPLICER ASSEMBLY PLAN

Only bar splicer assemblies as presented on the approved QPL list may be used.

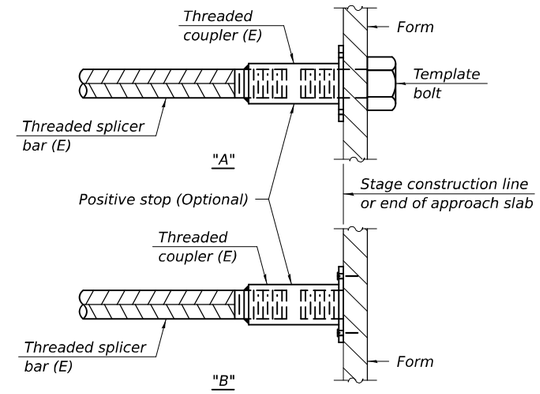

INSTALLATION AND SETTING METHODS

"A" : Set bar splicer assembly by means of a template bolt.
"B" : Set bar splicer assembly by nailing to wood forms or cementing to steel forms.
(E) : Indicates epoxy coating.

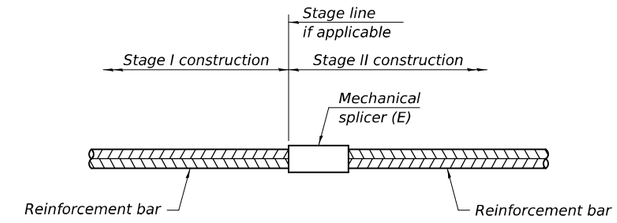

STANDARD MECHANICAL SPLICER

Threaded splicer bar length = min. lap length + 1½" + thread length

* Epoxy not required on Bar Splicer Assembly components used in conjunction with black bars.

Location	Bar size	No. assemblies required	Minimum lap length
DECK END	#5	14	2'-0"
DECK END	#6	28	3'-1"

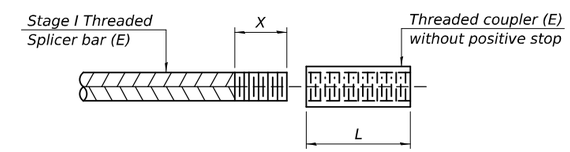

THREADING OF ASSEMBLIES

The threaded length "X" shall be no more than L/2. The bar should be tightened until 0-1 thread(s) is/are exposed.

Notes:
Splicer bars shall be deformed with threaded ends and have a minimum 60 ksi yield strength.
All reinforcement shall be lapped and tied to the splicer bars.
Bar splicer assemblies shall be epoxy coated according to the requirements for reinforcement bars. See Section 508 of the Standard Specifications.
See approved list of bar splicer assemblies and mechanical splicers for alternatives.

BSD-1 4-4-2025

STATE OF ILLINOIS
DEPARTMENT OF TRANSPORTATION

PLANS FOR PROPOSED FEDERAL AID INTERSTATE HIGHWAY

FOR INFORMATION ONLY

SCALES
PLAN 1 INCH = 10 FEET
HORIZONTAL 1 INCH = 100 FEET
VERTICAL 1 INCH = 10 FEET
CROSS SECTION HORIZ. 1 INCH = 5 FEET
CROSS SECTION VERT. 1 INCH = 5 FEET

F.A.I. ROUTE 55 SEC. 57-3HB McLEAN COUNTY

PROJECT I-55-5(33)169

C-93-020-72

SEE SHEET 5 FOR INDEX OF SHEETS
" " 6 " SUMMARY OF QUANTITY
" " 8 " SCHEMATIC PLAN

SECTION 57-3HB
BEGINS STA. 27+75

PROJECT IDENTIFICATION
SIGN (STD. 2153)

SECTION 57-3HB INCLUDES THE FABRICATION FURNISHING, & CONSTRUCTION OF A COMPOSITE STEEL GIRDER AND REINFORCED CONCRETE STRUCTURAL SLAB BRIDGE AT STA. 259+36.01 (F.A.I. 55) = STA. 50+00 (C.H. 29), VAULTED ABUTMENTS WITH 2 SPANS AT 117'-0".

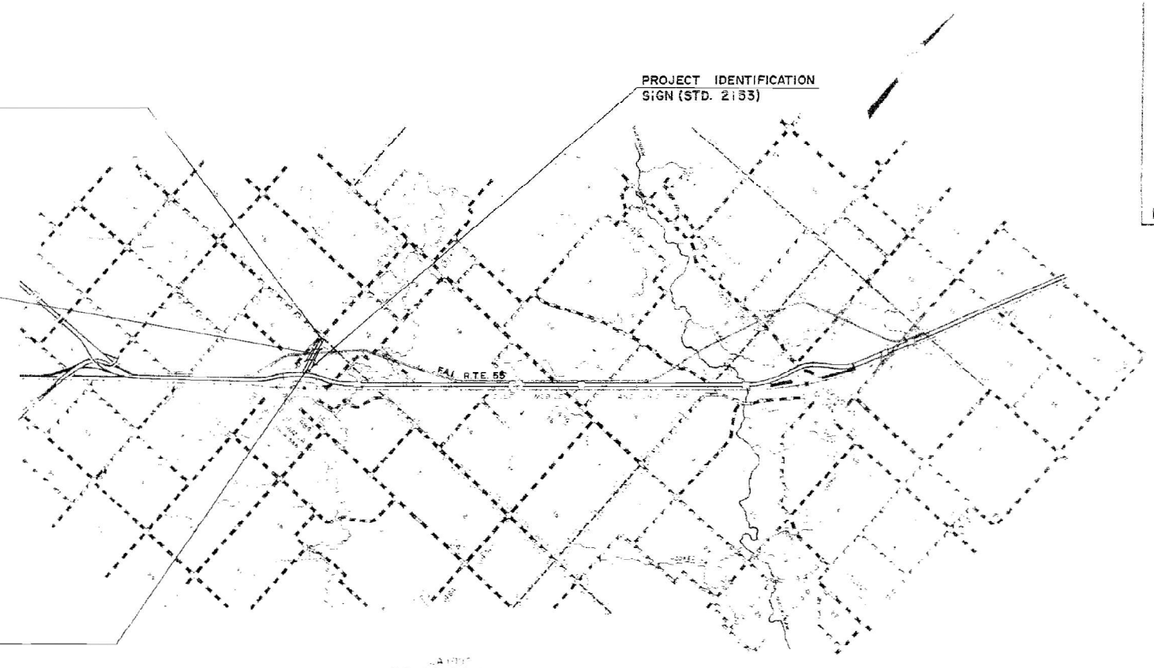

SECTION 57-3HB
ENDS STA. 68+90

GRAPHIC SCALE

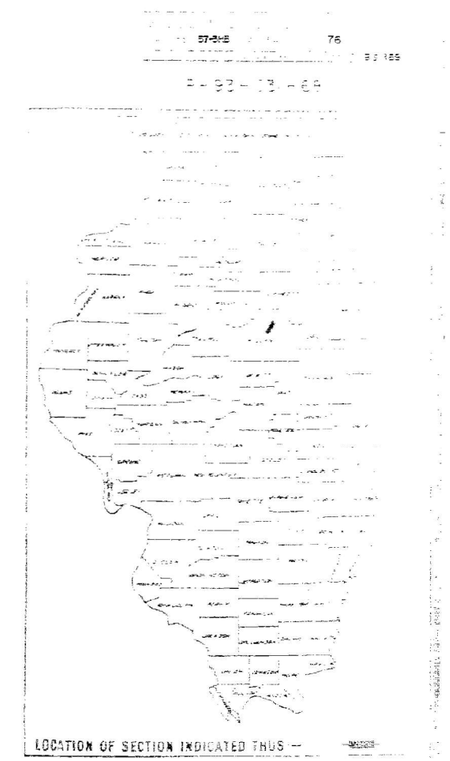

LOCATION OF SECTION INDICATED THUS —

8-24-73
8-24-73
8-24-73

UNDER SECRETARY, DIRECT TRANSPORTATION ENGINEER

HURST-ROSCHE ENGINEERS, INC.
1400 E. TREMONT, HILLSBORO, ILL.

NET LENGTH OF SECTION = 4115.00 FEET = 0.779 MILES
NET LENGTH OF PROJECT = 0.00 FEET = 0.000 MILES

HIGHWAY CLASSIFICATION
F.A.I. 55: =3290(93)·TRUNK·20.27 (P.C.C. 20)
C.H. 29: 402(93)·COLLECTOR·0.40 (P.C.C. 20)

57-3HB

MODEL: Default
FILE NAME: S:\JOL\6300-6399\6346\125\Drawings\CAD\ORD-10.12\CADsheets\057-0162-018-EX.dgn
10/22/2025 4:06:57 PM

STRAND ASSOCIATES
1170 SOUTH HOUBOLT ROAD
JOLIET, ILLINOIS 60431
(815) 744-4200
IDFPR NO. 184-001273

USER NAME = CodyH	DESIGNED -	REVISED -	
	CHECKED -	REVISED -	
PLOT SCALE = 0.167 ' / in.	DRAWN - CJH	REVISED -	
PLOT DATE = 10/22/2025	CHECKED - ELR	REVISED -	

STATE OF ILLINOIS
DEPARTMENT OF TRANSPORTATION

EXISTING DRAWINGS
STRUCTURE NO. 057-0162

F.A.I. RTE.	SECTION	COUNTY	TOTAL SHEETS	SHEET NO.
55	(57-3)BR	MCLEAN	126	80
		CONTRACT NO. 70F37		
	ILLINOIS	FED. AID PROJECT		

#86963 #119 3-10-00 FAI 55 McLean Co. SEC. (57-3-1,57-3,57-3-2,57-2)RS I&R #119 copy

119

98%

7-7-2001

057-0162

INDEX OF SHEETS

STANDARDS

000001-03	Standard Symbols, Abbreviations And Patterns
001001	Areas of Reinforcement Bars
001006	Decimal of an Inch and of a Foot
420001-02	Pavement Joints
420401-02	Bridge Approach Pavement
420701	Pavement Fabric
442001-02	Class A Patches
442101-02	Class B Patches
482006	Bituminous Shoulder - Adjacent To Rigid Pavement
482101	Rumble Strip for PCC or Bituminous Shoulder
542301	Precast Reinforced Concrete Flared End Section
601001	Sub-Surface Drains
601101	Concrete Headwall For Pipe Drains
606301-02	PC Concrete Islands And Medians
609001-01	Bridge Approach Shoulder Pavement And Drain
630001-02	Steel Plate Beam Guardrail
630201-03	PCC/Bit Stabilization At Steel Plate Beam Guardrail
630301	Shoulder Widening for Type 1 Guardrail Terminals
631031-02	Traffic Barrier Terminal, Type 6
635001	Delineators
635006	Reflector and Terminal Marker Placement
635011	Reflector Marker and Mounting Details
665001	Woven Wire Fence
701001	Off-Road Operations, 2-L, 2-W, 4.5 m (15') Min. Away, For Speeds > 45 MPH
701006-01	Off-Road Operations, 2-L, 2-W, 4.5 m (15') To 600 mm (24"), Away, Speeds > 45 MPH
701011	Off-Road Moving Operations, 2-L, 2-W, Day Only, For Speeds > 45 MPH
701101	Off-Road Operations, Multilane, Less Than 4.5 m (15') Away, Speeds > 45 MPH
701106	Off-Road Operations, Multilane, More Than 4.5 m (15') Away, For Speeds > 45 MPH
701201-01	Lane Closure, 2L, 2W, Day Only, On-Rd To 600 mm (24") Off-Rd For Speeds > 45 MPH
701316-01	Lane Closure, 2-L, 2-W, Bridge Repair, For Speeds > 45 MPH
701326-01	Lane Closure, 2-L, 2-W, Pavement Widening, For Speeds > 45 MPH
701401	Lane Closure Multilane with Barrier, For Speeds > 45 MPH
701402	Lane Closure Multilane with Barrier
701411-01	Lane Closure, Multilane, At Entrance Or Exit Ramp, For Speeds > 45 MPH
701426-01	Lane Closure, Multilane, Intermittent Or Moving Operation, For Speeds > 45 MPH
702001-01	Traffic Control Devices
704001	Temporary Concrete Barrier
720011	Metal Posts (signs, markers, and delineators)
780001-01	Typical Pavement Markings
781001-02	Typical Applications, Raised Reflective Pavement Markers
840006	Traffic Signal Mounting Details
846001	Detector Loop Installations
846006	Typical Layout For Detection Loops

MICROFILMED _____
REEL NUMBER _____
AWARDED _____
RESIDENT ENGINEER _____
AS BUILT CHANGES WERE MADE
ON THE FOLLOWING SHEETS _____

JULIE 1-800-892-0123

DISTRICT 3 NO. (815) 434-6131

PROJECT ENGINEER: STEVE ANDREWS
UNIT CHIEF: MICHELE LINDEMANN
TOWNSHIP: NORMAL,TOWANDA & MONEY CREEK

CONTRACT NO. 86963 057-0162

JAN. 13, 2000
\ED02100\SHEETS.EGN

STATE OF ILLINOIS
DEPARTMENT OF TRANSPORTATION
DIVISION OF HIGHWAYS

PLANS FOR PROPOSED
FEDERAL AID HIGHWAY

F.A.I. ROUTE 55 (I-55)
SECTION (57-3-1,57-3,57-3-2,57-2)RS
McLEAN COUNTY PROJ. ACIM-55-5(99)166

FOR INFORMATION ONLY

F.A.I. RTE.	SECTION	COUNTY	TOTAL SHEETS	SHEET NO.
55	*	McLEAN	139	1

F.A.H.A. REG. 1 ILLINOIS PROJECT
*(57-3-1,57-3,57-3-2,57-2)R
P-93-043-99
D-93-021-00

C-93-001-00

END IMPROVEMENT
STA. 625+00

S.N. 057-0166
STA. 571+30

S.N. 057-0169
S.N. 057-0170
STA. 608+35.40

S.N. 057-0163
S.N. 057-0164
STA. 322+95

S.N. 057-0162
STA. 259+36.01

S.N. 057-0167
S.N. 057-0168
STA. 588+37.50

S.N. 057-0801
STA. 571+67

BEGIN IMPROVEMENT
STA. 53+75 S.B.
STA. 39+00 N.B.

S.N. 057-0165
STA. 464+85.00

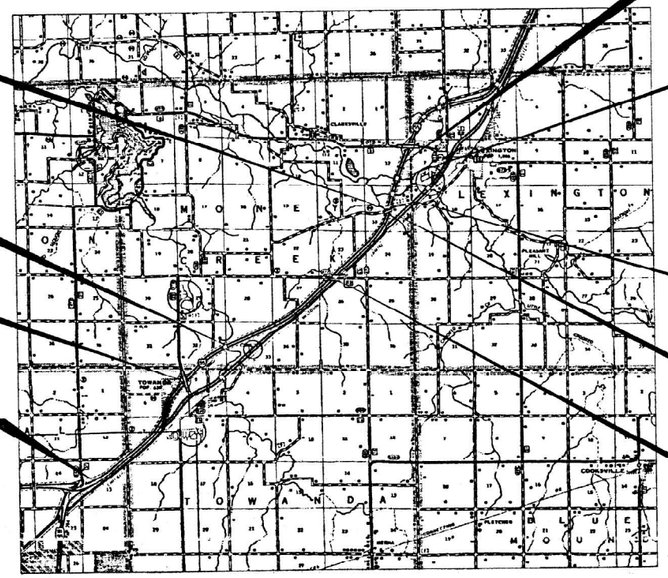

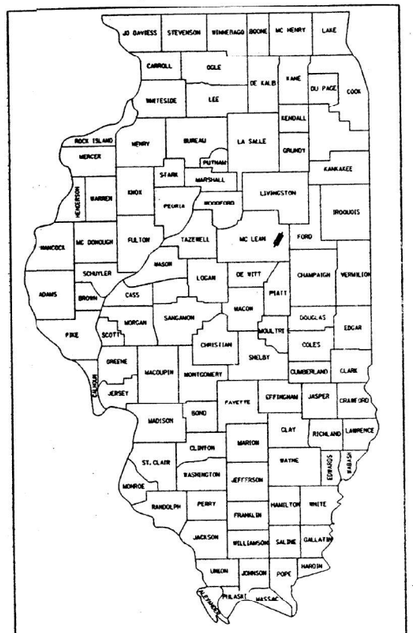

LOCATION OF SECTION INDICATED THUS: -

DESIGN DESIGNATION - INTERSTATE
ADT (2000) = 27300
P.V. - 79.5%
S.U. - 2.5%
M.U. - 18.0%

GROSS & NET LENGTH OF IMPROVEMENT:
S.B. = 54,100.19 FT. = 10.25 MI.
N.B. = 52,951.28 FT. = 10.03 MI.

STATION EQUATION S.B. 51+14.53 BK. = 86+60.28 AH.
STATION EQUATION N.B. 36+03.18 BK. = 98+45.54 AH.

STATE OF ILLINOIS
DEPARTMENT OF TRANSPORTATION
DIVISION OF HIGHWAYS

SUBMITTED JANUARY 13, 2000
James L. Smith
DISTRICT ENGINEER
February 4, 2000
Bill Sunley
ENGINEER OF DESIGN AND ENVIRONMENT
February 4, 2000
James C. Sidy
DIRECTOR, DIVISION OF HIGHWAYS

3-211

McLEAN COUNTY SECTION: (57-3-1,57-3,57-3-2,57-2)RS ROUTE: F.A.I. 55

MODEL: Default
FILE NAME: S:\JOL6300--8399\6346\125\Drawings\CAD\ORD-10.12\CADsheets\057-0162-019-EX.dgn

STRAND ASSOCIATES
1170 SOUTH HOUBOLT ROAD
JOLIET, ILLINOIS 60431
(815) 744-4200
IDFPR NO. 184-001273

USER NAME = CodyH	DESIGNED - ____	REVISED - ____	
	CHECKED - ____	REVISED - ____	
PLOT SCALE = 0.167' / in.	DRAWN - CJH	REVISED - ____	
PLOT DATE = 10/22/2025	CHECKED - ELR	REVISED - ____	

STATE OF ILLINOIS
DEPARTMENT OF TRANSPORTATION

EXISTING DRAWINGS
STRUCTURE NO. 057-0162

F.A.I. RTE.	SECTION	COUNTY	TOTAL SHEETS	SHEET NO.
55	(57-3)BR	MCLEAN	126	81
		CONTRACT NO. 70F37		
	ILLINOIS	FED. AID PROJECT		

10/22/2025 4:06:59 PM

Benchmark: PT Number 5121-3 = Chiseled Square NE Wing of Structure 057-0164 Elev. 765.01, and 5121-4 = Chiseled Square SW Wing of Structure 057-0163 Elev. 765.37.

Existing Structure: S.N. 057-0163 and S.N. 057-0164 were built in 1974 as F.A.I. 55 over Money Creek Section 57-3B. The structures consist of continuous rolled W33x130 steel wide flange beams with reinforced concrete deck superstructures supported on abutments and piers with pile foundations. In 2000, under Section (57-3-1, 57-3, 57-3-2, 57-2) RS, the bridge deck joints were replaced along with a microsilica concrete overlay, that was placed after ½" deck scarification and substructure repairs were performed. The structure was repainted in June of 2013.

Traffic Control: Traffic to be maintained by utilizing staged construction.

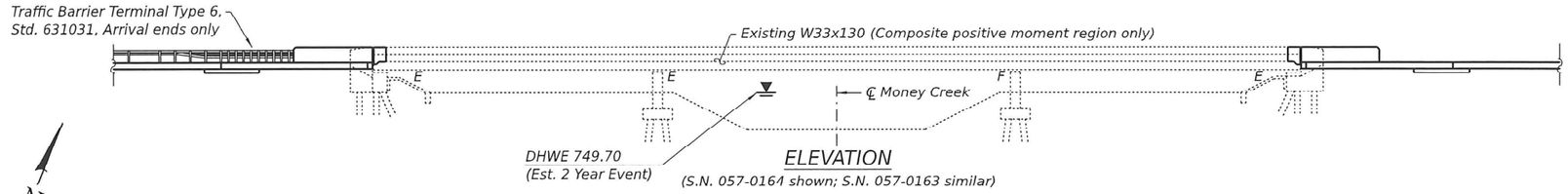

ELEVATION

(S.N. 057-0164 shown; S.N. 057-0163 similar)

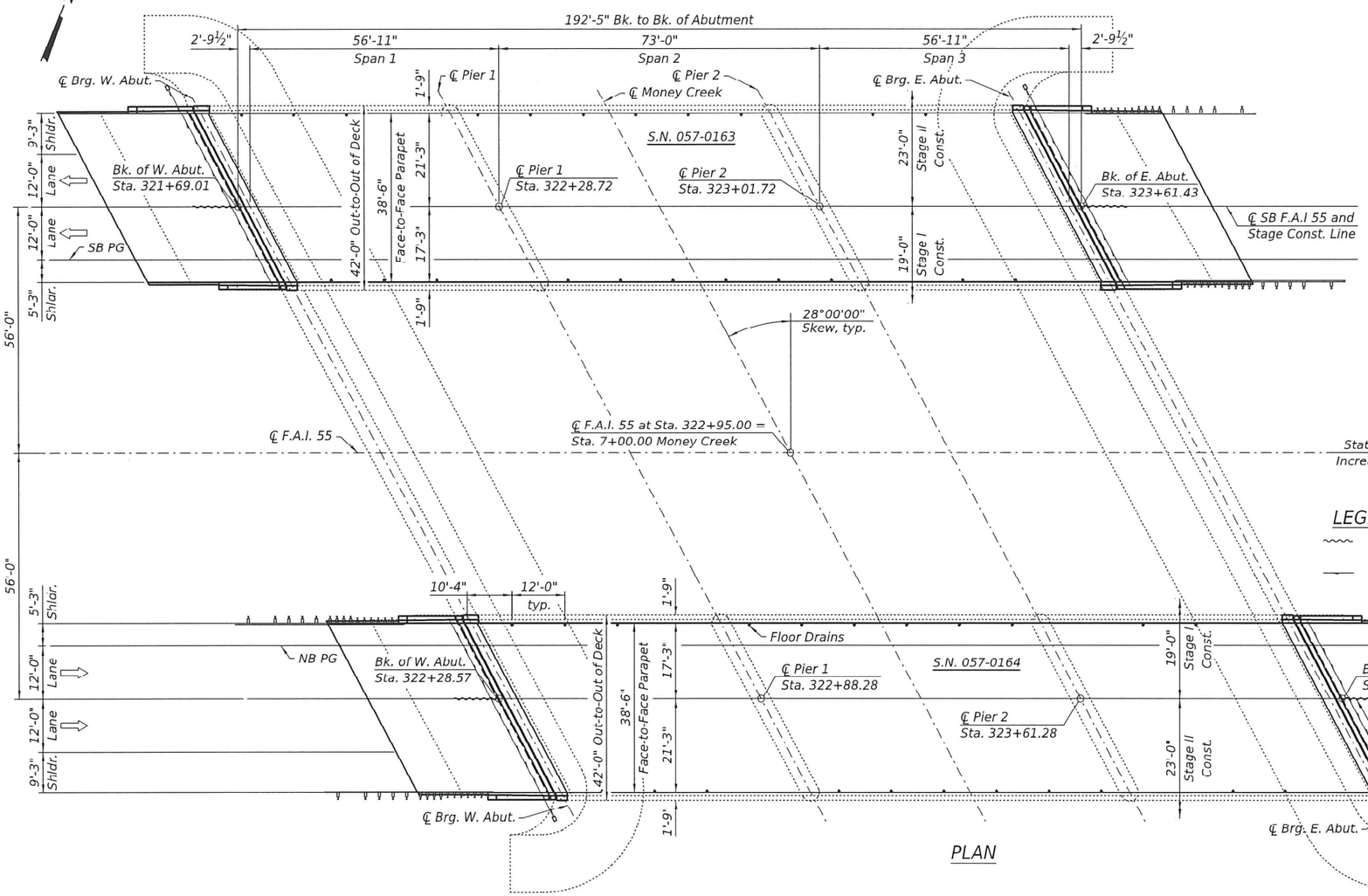

PLAN

SCOPE OF WORK

1. Remove existing concrete overlay and scarify bridge deck.
2. Perform Partial and Full Depth Repairs as directed by the Engineer.
3. Remove and replace existing Preformed Joint Seal with a Strip Seal.
4. Jack and remove existing bearings at abutments and replace with Type I Elastomeric Bearings with Steel Extensions.
5. Perform Structural Steel Repairs and replace end diaphragms at specified locations.
6. Remove and Replace Abutment Back Walls and install Pipe Underdrain for Structures 4".
7. Remove and Replace Approach Pavement.
8. Perform Slope wall Repairs.
9. Place Bridge Deck Latex Concrete Overlay 3¾" with fiber enhancement.
10. Perform formed concrete repairs at substructure and bridge parapets as directed by the Engineer.
11. Apply Protective Coat to new concrete and bridge deck overlay.

DESIGN SPECIFICATIONS

2002 AASHTO Standard Specifications for Highway Bridges, 17th Edition (I FD)

LOADING HS20-44 AND ALT.

No additional Future Wearing Surface Allowed

DESIGN STRESSES

FIELD UNITS

New Construction:
f'c = 3,500 psi (Substructure)
f'c = 4,000 psi (Superstructure)
fy = 60,000 psi (Reinforcement)

Existing Structure:
fc = 1,200 psi (Slab)
fc = 1,400 psi (Curb, Parapet, Sub)
fs = 20,000 psi (Reinforcement)
fs = 20,000 psi (Structural Steel)

Note: Up to ¼" to be ground off the bridge deck and the bridge approach slabs. The proposed profile is to match the existing profile.

NATHAN D. RICK
081-007039
LICENSED PROFESSIONAL ENGINEER OF ILLINOIS

Nathan D. Rick, S.E.
Licensed Structural Engineer
State of Illinois No. 081-007039
Registration Expires 11/30/2026
11-5-2025

LEGEND

Temporary Sheet Piling

Pipe Underdrain for Structures

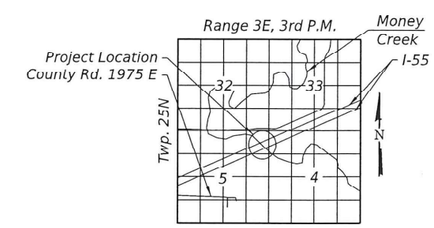

LOCATION SKETCH

GENERAL PLAN AND ELEVATION
F.A.I. 55 OVER MONEY CREEK
SECTION (57-3)BR
MCLEAN COUNTY
STA. 322+95.00
S.N. 057-0163 (SB)
S.N. 057-0164 (NB)

MODEL: Default
FILE NAME: S:\JOL\6300-6399\6346\125\Drawings\CAD\CRD-10.12\CADsheets\057-0163-0164-001-GPE.dgn
11/5/2025 8:49:53 AM

STRAND ASSOCIATES
1170 SOUTH HOUBOLT ROAD
JOLIET, ILLINOIS 60431
(815) 744-4200
IDFPR NO. 184-001273

USER NAME = CodyH	DESIGNED - ELR	REVISED -	
	CHECKED - NDR	REVISED -	
PLOT SCALE = 0:2.0000 ':" / in.	DRAWN - CJH	REVISED -	
PLOT DATE = 11/5/2025	CHECKED - ELR	REVISED -	

STATE OF ILLINOIS
DEPARTMENT OF TRANSPORTATION

GENERAL PLAN AND ELEVATION
STRUCTURE NO. 057-0163 AND 057-0164

SHEET 1 OF 32 SHEETS

F.A.I. RTE.	SECTION	COUNTY	TOTAL SHEETS	SHEET NO.
55	(57-3)BR	MCLEAN	126	82
		CONTRACT NO. 70F37		
		ILLINOIS	FED. AID PROJECT	

GENERAL NOTES

1. All structural steel shall conform to AASHTO Classification M-270 Gr. 36, unless otherwise noted.
2. All new structural steel and bearing assemblies shall be hot-dip galvanized. See Special Provisions for "Hot Dip Galvanizing for Structural Steel".
3. Fasteners shall be ASTM F 3125 Grade A325 Type 1, mechanically galvanized bolts. Bolts ¾ in. diameter, holes $^{13}/_{16}$ in. diameter, unless otherwise noted.
4. Calculated weight of Structural Steel = 7,640 (Grade 36)
5. No field welding is permitted except as specified in the contract documents.
6. Reinforcement bars designated (E) shall be epoxy coated.
7. Prior to pouring the new concrete rust, mill scale, and other pontentially detrimental foreign material shall be removed from the surfaces in contact with the concrete utilizing pneumatic needle scalers or by sand blasting. Areas cleaned shall be coated with 2 coats of aluminum epoxy mastic per Article 1008.03. Cost will be included in the pay item covering removal of the existing concrete.
8. Plan dimensions and details relative to the existing structure have been taken from existing plans are subject to nominal construction variations. The Contractor shall field verify existing dimensions and details affecting new construction and make necessary approved adjustments prior to construction or ordering of materials. Such variations shall not be cause for additional compensation for a change in scope of the work, however, the Contractor will be paid for the quantity actually furnished at the unit price bid for the work.
9. Concrete Sealer shall be applied to the designated areas of the new backwall and cleaned beam seats. The Concrete Sealer shall be a "film forming" type for horizontal surfaces.
10. Existing Name Plates shall be cleaned and replaced in their original locations. Cost included in Concrete Removal.
11. The existing structural steel coating contains lead. The Contractor shall take appropriate precautions to address the presence of lead on this project.
12. The existing bearings contain lead plates. The Contractor shall take appropriate precautions to address the presence of lead on this project.
13. Existing structural steel that will be in contact with new structural steel shall be cleaned and painted prior to erection as required by the Special Provision "Cleaning and Painting Contact Surface Areas of Existing Steel Structures".
14. Joint openings shall be adjusted according to Article 520.04 of the Std. Specs. when the Concrete Superstructure for the joint replacement is poured at an ambient temp. other than 50° F.
15. Synthetic Fibers shall be included in the bridge deck concrete overlay specified. See Special Provisions.
16. Protective Coat shall be applied to all new concrete superstructure and all new concrete overlays as specified in Article 503.19 of the Standard Specifications.

INDEX OF SHEETS

TOTAL BILL OF MATERIALS

Item	Unit	Super	Sub	Total
CONCRETE REMOVAL	CU YD	22.4	62.4	84.8
SLOPE WALL REMOVAL	SQ YD		327	327
STRUCTURE EXCAVATION	CU YD		350	350
FLOOR DRAINS	EACH	44		44
CONCRETE STRUCTURES	CU YD		97.4	97.4
CONCRETE SUPERSTRUCTURE	CU YD	56.3		56.3
PROTECTIVE COAT	SQ YD	2,591		2,591
CONCRETE SUPERSTRUCTURE (APPROACH SLAB)	CU YD	231.4		231.4
FURNISHING AND ERECTING STRUCTURAL STEEL	POUND		6,080	6,080
REINFORCEMENT BARS, EPOXY COATED	POUND	97,840	15,800	113,640
BAR SPLICERS	EACH	676	56	732
MECHANICAL SPLICERS	EACH	8		8
SLOPE WALL 4 INCH	SQ YD		327	327
PREFORMED JOINT STRIP SEAL	FOOT	180.0		180.0
ELASTOMERIC BEARING ASSEMBLY, TYPE I	EACH		24	24
ANCHOR BOLTS, 3/4"	EACH		48	48
TEMPORARY SHEET PILING	SQ FT		1,236	1,236
DECK SLAB REPAIR (PARTIAL)	SQ YD	66		66
DECK SLAB REPAIR (FULL DEPTH, TYPE I)	SQ YD	31		31
DECK SLAB REPAIR (FULL DEPTH, TYPE II)	SQ YD	71		71
BRIDGE DECK SCARIFICATION 3 1/2"	SQ YD	1,567		1,567
BRIDGE DECK LATEX CONCRETE OVERLAY, 3 3/4"	SQ YD	1,567		1,567
STRUCTURAL REPAIR OF CONCRETE (DEPTH EQUAL TO OR LESS THAN 5 INCHES)	SQ FT	114	32	146
GRANULAR BACKFILL FOR STRUCTURES	CU YD		287	287
CONCRETE SEALER	SQ FT		552	552
GEOCOMPOSITE WALL DRAIN	SQ YD		155	155
CONTROLLED LOW-STRENGTH MATERIAL	CU YD		103	103
PIPE UNDERDRAINS FOR STRUCTURES 4"	FOOT		256	256
BRIDGE DECK GROOVING (LONGITUDINAL)	SQ YD	1,341		1,341
STRUCTURAL STEEL REMOVAL	POUND	2,190		2,190
STRUCTURAL STEEL REPAIR	POUND	1,370		1,370
BAR TERMINATORS	EACH	16		16
SLOPE WALL CRACK SEALING	FOOT		72.8	72.8
SLOPE WALL REPAIR	SQ YD		5	5
JACK AND REMOVE EXISTING BEARINGS	EACH		24	24
CLEANING BRIDGE SEATS	SQ FT		552	552
DIAMOND GRINDING (BRIDGE SECTION)	SQ YD	1,926		1,926

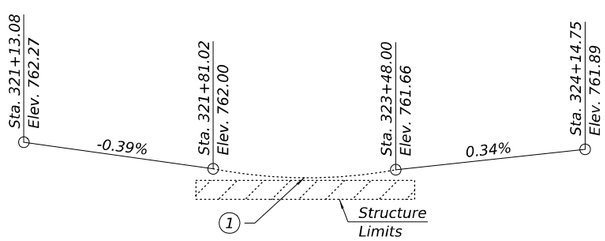

I-55 SB PROFILE GRADE

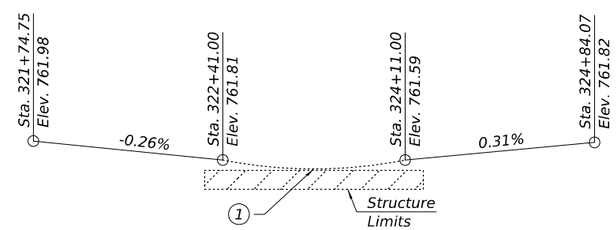

I-55 NB PROFILE GRADE

(1) Grades outside of established profiles are to match existing grade through overlay.

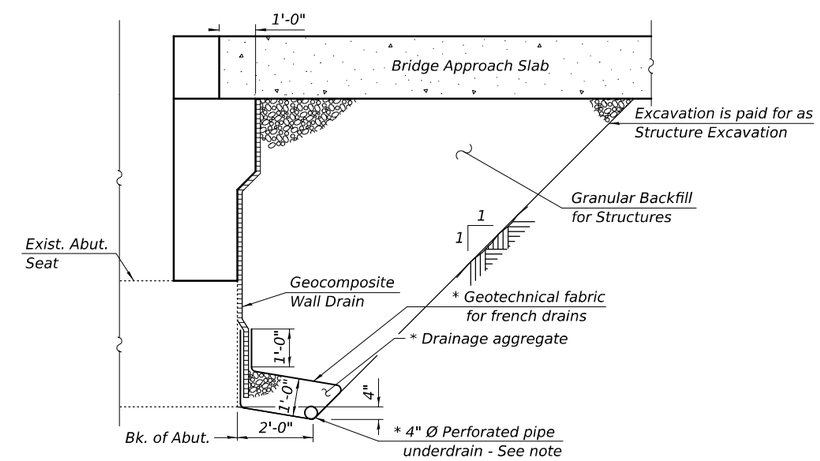

SECTION THRU ABUTMENT

(Horiz. dim. at Rt. ∠'s)

* Included in the cost of Pipe Underdrains for Structures 4" (See Special Provisions).

** Granular Backfill for Structures shall follow Standard Specification 6 expect the course aggregate shall be grade CA 7, CA 11, or CA 14.

Note:
All drainage system components shall extend to the abutment back wall until they intersect the wingwalls or 2'-0" from the end of the wingwalls when the wings are parallal to the abutment. The pipe shall extend under the wingwall, if necessary, until intersecting the side slopes. The pipes shall drain into concrete headwalls. (See Article 601.05 of the Standard Specifications and Highway Standard 601101).

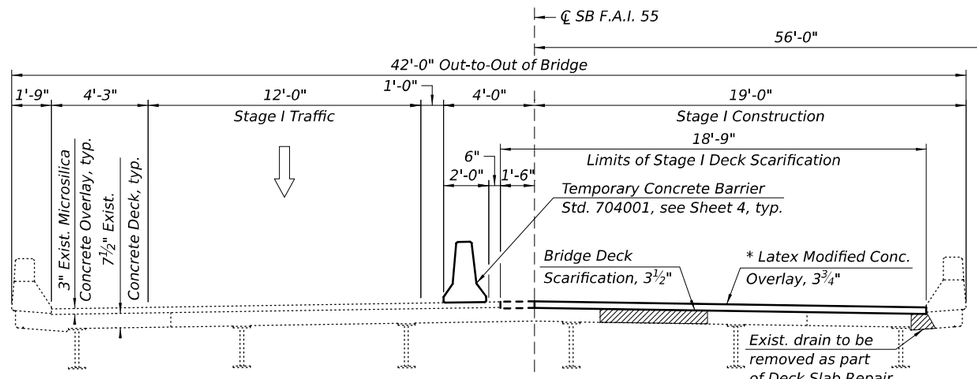

STAGE I CONSTRUCTION - S.N. 057-0163

(Looking East)

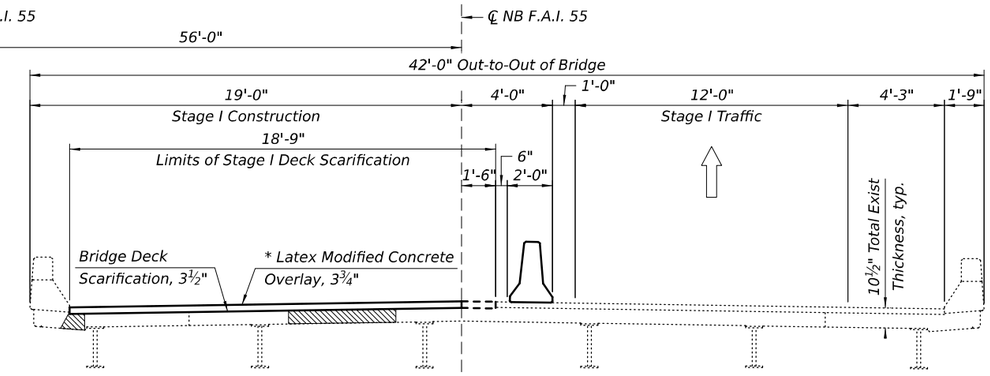

STAGE I CONSTRUCTION - S.N. 057-0164

(Looking East)

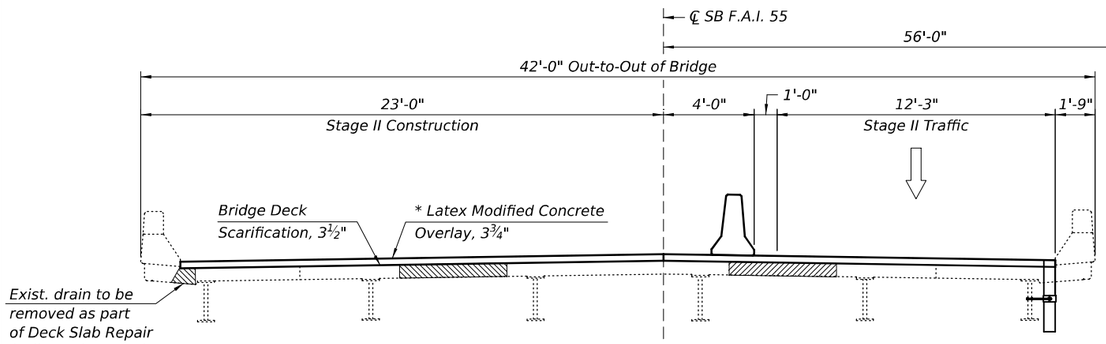

STAGE II CONSTRUCTION - S.N. 057-0163

(Looking East)

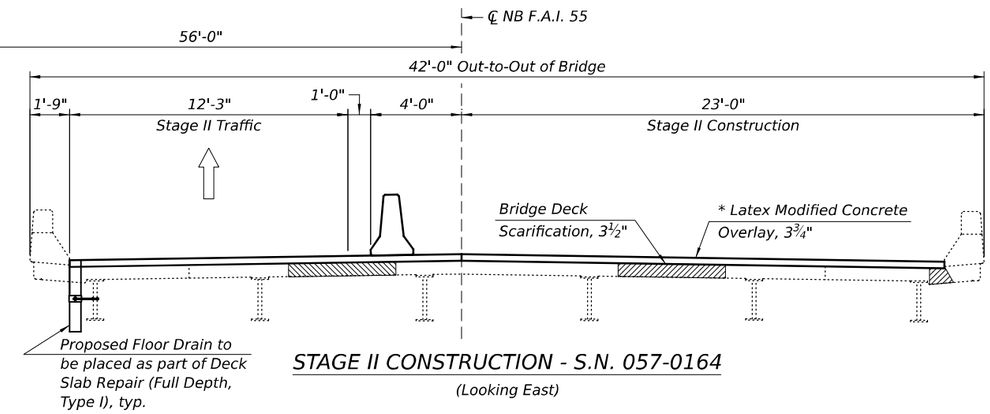

STAGE II CONSTRUCTION - S.N. 057-0164

(Looking East)

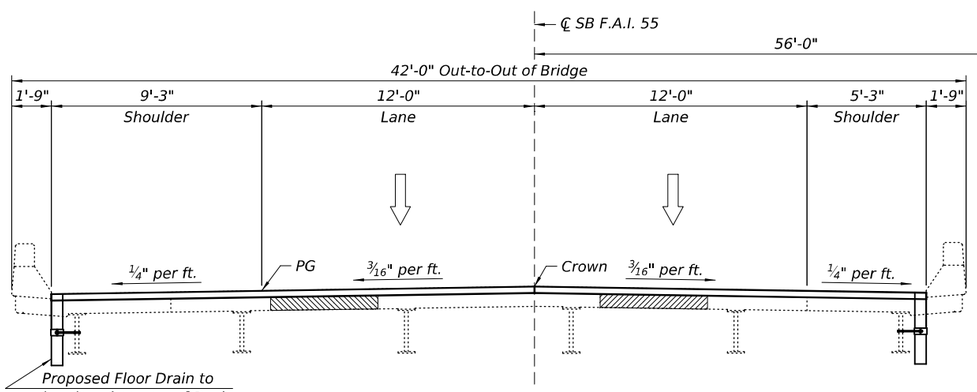

FINAL CROSS SECTION - S.N. 057-0163

(Looking East)

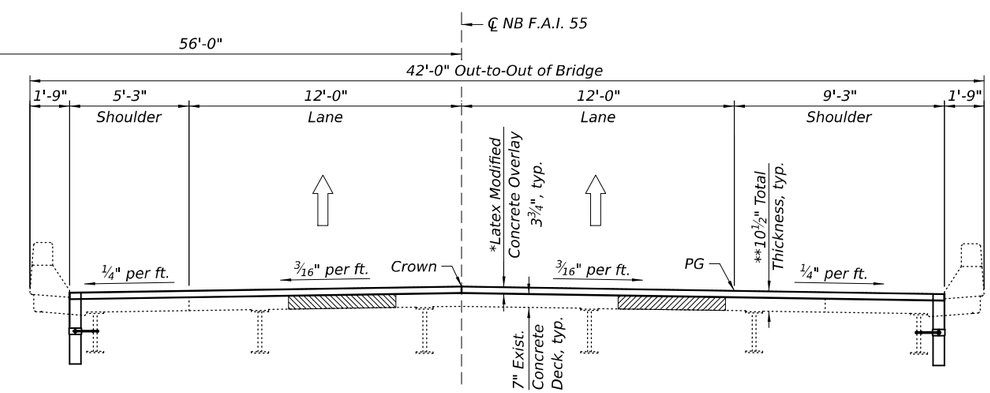

FINAL CROSS SECTION - S.N. 057-0164

(Looking East)

* Prior to Grinding
** After Grinding

LEGEND

Deck Slab Repair (Full Depth)

Notes:

1. The total overlay thickness is based on existing plans. The actual thickness of the overlay may vary.
2. Up to ¼ inch to be ground off the bridge deck.

MODEL: Default
FILE NAME: S:\JOL\6300--639\6346\125\Drawings\CAD\CRD-10,12\CADsheets\057-0163-0164-003-CS.dgn

STRAND ASSOCIATES
1170 SOUTH HOUBOLT ROAD
JOLIET, ILLINOIS 60431
(815) 744-4200
IDFPR NO. 184-001273

USER NAME = emilyre	DESIGNED - ELR	REVISED -	
	CHECKED - NDR	REVISED -	
PLOT SCALE = 0:2.0000 ':" / in.	DRAWN - CJH	REVISED -	
PLOT DATE = 11/6/2025	CHECKED - ELR	REVISED -	

STATE OF ILLINOIS
DEPARTMENT OF TRANSPORTATION

CONSTRUCTION STAGING
STRUCTURE NO. 057-0163 AND 057-0164

SHEET 3 OF 32 SHEETS

F.A.I. RTE.	SECTION	COUNTY	TOTAL SHEETS	SHEET NO.
55	(57-3)BR	MCLEAN	126	84
		CONTRACT NO. 70F37		
	ILLINOIS	FED. AID PROJECT		

11/6/2025 1:27:54 PM

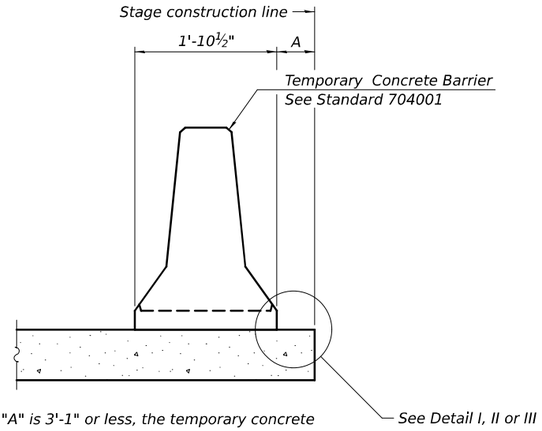

When "A" is 3'-1" or less, the temporary concrete barrier shall be restrained to the new slab according to Detail I, II or III. No restraint is required when "A" is greater than 3'-1".

NEW SLAB OR NEW DECK BEAM

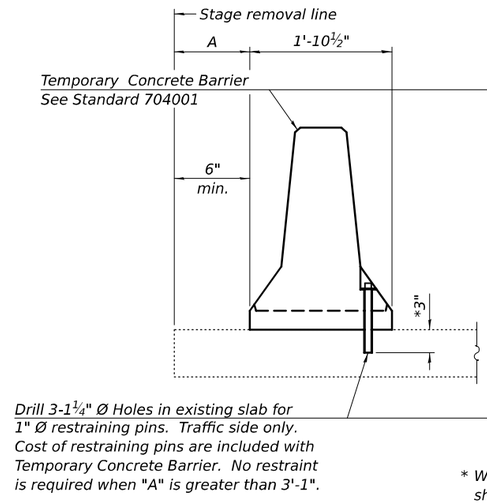

EXISTING SLAB

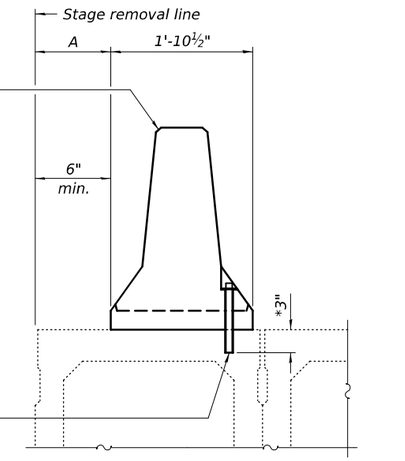

* When hot-mix asphalt wearing surface is present, embedment shall be 3" plus the wearing surface depth.

EXISTING DECK BEAM

SECTIONS THRU SLAB OR DECK BEAM

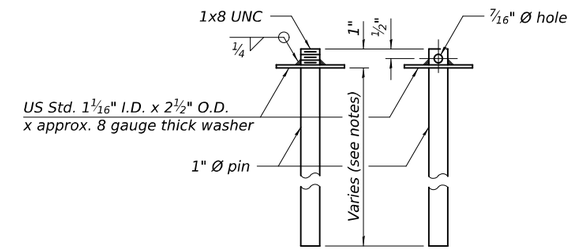

RESTRAINING PIN

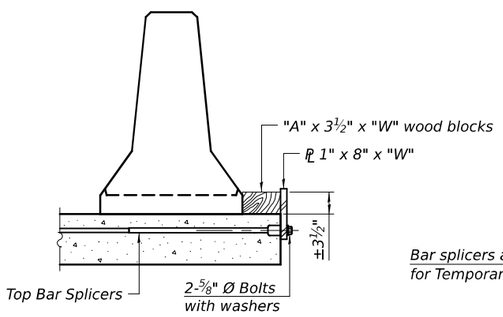

DETAIL I

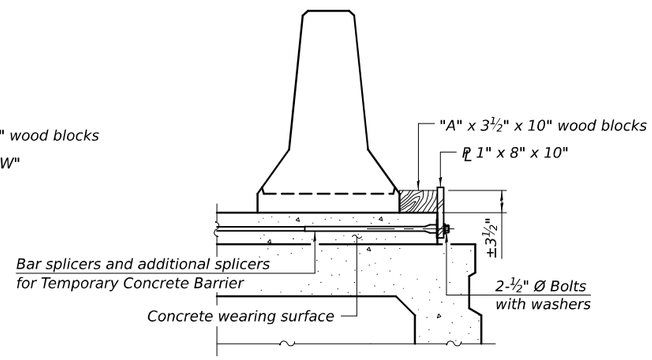

DETAIL II

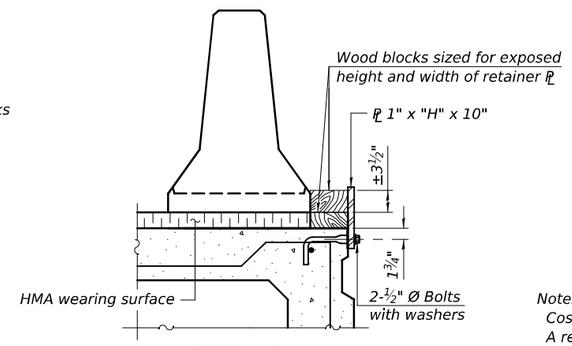

DETAIL III

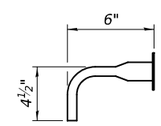

BAR SPLICER FOR #4 BAR - DETAIL III

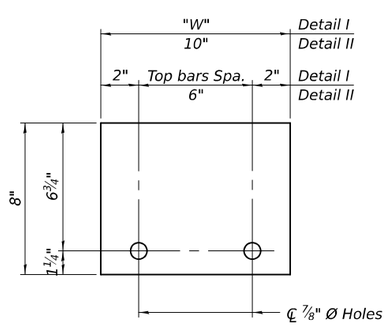

STEEL RETAINER PL 1" x 8" x "W"

(Detail I and II)

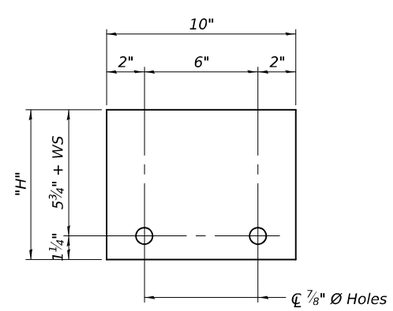

STEEL RETAINER PL 1" x "H" x 10"

(Detail III)

Notes:

Cost of retainer assembly is included with Temporary Concrete Barrier.

A retainer assembly shall be located at the approximate ℄ of each temporary concrete barrier.

The retainer plate shall not be removed until the concrete on the adjacent stage is ready to be poured. For Detail III applications the retainer plate shall not be removed until just prior to placing the adjacent beam.

When the 'A' dimension is less than 1½", the wood block shall be omitted and the barrier shall be placed in direct contact with the steel retainer plate. For deck beam applications the minimum required 'A' distance is 6" to accommodate the shear key clamping device.

Detail I - Installation for a new bridge deck or bridge slab.

Detail II - Installation for a new deck beam with an initial concrete wearing surface. Additional bar splicers shall be provided at 6'-0" centers and paired with the bar splicers of the concrete wearing surface reinforcement to accommodate the installation of the retainer assemblies. The cost of the additional bar splicers is included with the concrete wearing surface.

Detail III - Installation for a new deck beam with no initial wearing surface or with an initial hot-mix asphalt (HMA) wearing surface present. The deck beam directly beneath the temporary concrete barrier shall be fabricated with bar splicer inserts in the side of the beam, as detailed, to accommodate the installation of the retainer assemblies. A pair of bar splicers, 6" apart, shall be placed at 6'-0" centers along the length of the beam. The cost of the bar splicers is included with the deck beam.

RAILING CRITERIA

NCHRP 350 Test Level	3
Railing Weight (plf)	440

R-27

5-15-2023

STRAND ASSOCIATES®
1170 SOUTH HOUBOLT ROAD
JOLIET, ILLINOIS 60431
(815) 744-4200
IDFPR NO. 184-001273

USER NAME = emilyre	DESIGNED -	REVISED -	
	CHECKED -	REVISED -	
PLOT SCALE = 0:2.0000 ':" / in.	DRAWN - CJH	REVISED -	
PLOT DATE = 11/6/2025	CHECKED - ELR	REVISED -	

STATE OF ILLINOIS
DEPARTMENT OF TRANSPORTATION

TEMPORARY CONCRETE BARRIER
STRUCTURE NO. 057-0163 AND 057-0164

SHEET 4 OF 32 SHEETS

F.A.I. RTE.	SECTION	COUNTY	TOTAL SHEETS	SHEET NO.
55	(57-3)BR	MCLEAN	126	85
		CONTRACT NO. 70F37		
	ILLINOIS	FED. AID PROJECT		

MODEL: Default
FILE NAME: S:\JOL\6300-6399\6346\125\Drawings\CAD\ORD-10.12\CADsheets\057-0163-0164-004-TCB.dgn
11/6/2025 1:27:55 PM

N. EDGE OF SHOULDER

Location	Station	Offset to PG	Theoretical Grade Elevations	Theoretical Grade Elevations Adjusted for Grinding
W. End W. Approach	321+28.28	-33.25	762.02	762.04
A1	321+38.28	-33.25	761.98	762.00
A2	321+48.28	-33.25	761.94	761.96
E. End W. Approach	321+58.28	-33.25	761.90	761.92

N. EDGE OF PAVEMENT

Location	Station	Offset to PG	Theoretical Grade Elevations	Theoretical Grade Elevations Adjusted for Grinding
W. End W. Approach	321+33.20	-24.00	762.19	762.21
A1	321+43.20	-24.00	762.15	762.17
A2	321+53.20	-24.00	762.11	762.13
E. End W. Approach	321+63.20	-24.00	762.07	762.10

STAGE I/II CONST. JT.

Location	Station	Offset to PG	Theoretical Grade Elevations	Theoretical Grade Elevations Adjusted for Grinding
W. End W. Approach	321+39.58	-12.00	762.35	762.37
A1	321+49.58	-12.00	762.32	762.34
A2	321+59.58	-12.00	762.28	762.30
E. End W. Approach	321+69.58	-12.00	762.24	762.26

SB PG/ S. EDGE OF PAVEMENT

Location	Station	Offset to PG	Theoretical Grade Elevations	Theoretical Grade Elevations Adjusted for Grinding
W. End W. Approach	321+45.96	0.00	762.14	762.16
A1	321+55.96	0.00	762.10	762.12
A2	321+65.96	0.00	762.06	762.08
E. End W. Approach	321+75.96	0.00	762.02	762.05

S. EDGE OF SHOULDER

Location	Station	Offset to PG	Theoretical Grade Elevations	Theoretical Grade Elevations Adjusted for Grinding
W. End W. Approach	321+48.75	5.25	762.02	762.04
A1	321+58.75	5.25	761.98	762.00
A2	321+68.75	5.25	761.94	761.96
E. End W. Approach	321+78.75	5.25	761.90	761.93

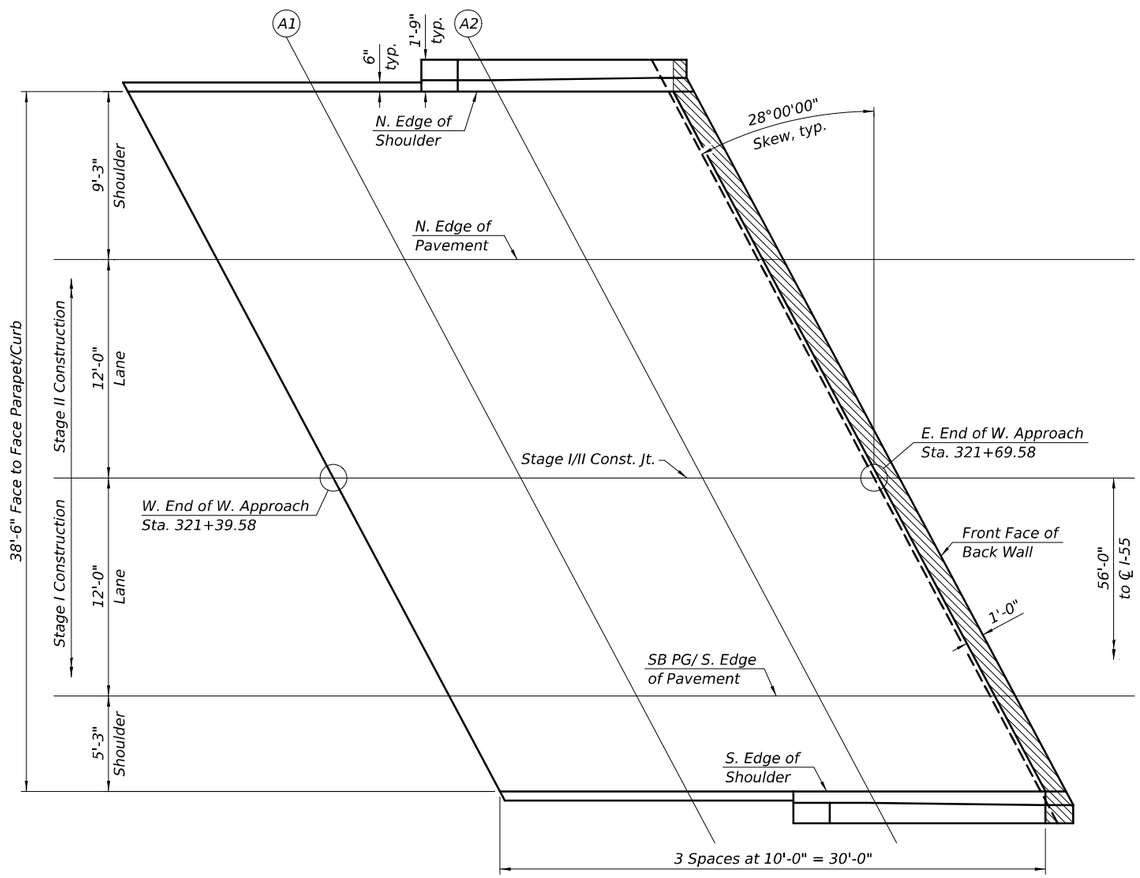

PLAN

(West Approach)

N

MODEL: Default
FILE NAME: S:\JOL\6300--8399\63461125\Drawings\CAD\ORD-10.12\CADsheets\057-0163-01644-005-TSE1.dgn

11/6/2025 1:27:56 PM

STRAND ASSOCIATES
1170 SOUTH HOUBOLT ROAD
JOLIET, ILLINOIS 60431
(815) 744-4200
IDFPR NO. 184-001273

USER NAME = emilyre	DESIGNED - ELR	REVISED -	
	CHECKED - NDR	REVISED -	
PLOT SCALE = 0:2.0000 ':" / in.	DRAWN - CJH	REVISED -	
PLOT DATE = 11/6/2025	CHECKED - ELR	REVISED -	

STATE OF ILLINOIS
DEPARTMENT OF TRANSPORTATION

TOP OF APPROACH SLAB ELEVATIONS (1 OF 4)
STRUCTURE NO. 057-0163 (SB)

SHEET 5 OF 32 SHEETS

F.A.I. RTE.	SECTION	COUNTY	TOTAL SHEETS	SHEET NO.
55	(57-3)BR	MCLEAN	126	86
		CONTRACT NO. 70F37		
		ILLINOIS	FED. AID PROJECT	

N. EDGE OF SHOULDER

Location	Station	Offset to PG	Theoretical Grade Elevations	Theoretical Grade Elevations Adjusted for Grinding
W. End E. Approach	323+49.57	-33.25	761.48	761.50
A3	323+59.57	-33.25	761.51	761.53
A4	323+69.57	-33.25	761.54	761.56
E. End E. Approach	323+79.57	-33.25	761.58	761.60

N. EDGE OF PAVEMENT

Location	Station	Offset to PG	Theoretical Grade Elevations	Theoretical Grade Elevations Adjusted for Grinding
W. End E. Approach	323+54.49	-24.00	761.69	761.71
A3	323+64.49	-24.00	761.72	761.74
A4	323+74.49	-24.00	761.75	761.77
E. End E. Approach	323+84.49	-24.00	761.79	761.81

STAGE I/II CONST. JT

Location	Station	Offset to PG	Theoretical Grade Elevations	Theoretical Grade Elevations Adjusted for Grinding
W. End E. Approach	323+59.36	-12.00	761.89	761.91
A3	323+70.87	-12.00	761.93	761.95
A4	323+80.87	-12.00	761.96	761.98
E. End E. Approach	323+90.87	-12.00	762.00	762.02

SB PG/S. EDGE OF PAVEMENT

Location	Station	Offset to PG	Theoretical Grade Elevations	Theoretical Grade Elevations Adjusted for Grinding
W. End E. Approach	323+67.25	0.00	761.73	761.75
A3	323+77.25	0.00	761.76	761.78
A4	323+87.25	0.00	761.80	761.82
E. End E. Approach	323+97.25	0.00	761.83	761.85

S. EDGE OF PAVEMENT

Location	Station	Offset to PG	Theoretical Grade Elevations	Theoretical Grade Elevations Adjusted for Grinding
W. End E. Approach	323+70.04	5.25	761.63	761.65
A3	323+80.04	5.25	761.66	761.68
A4	323+90.04	5.25	761.70	761.72
E. End E. Approach	324+00.04	5.25	761.73	761.75

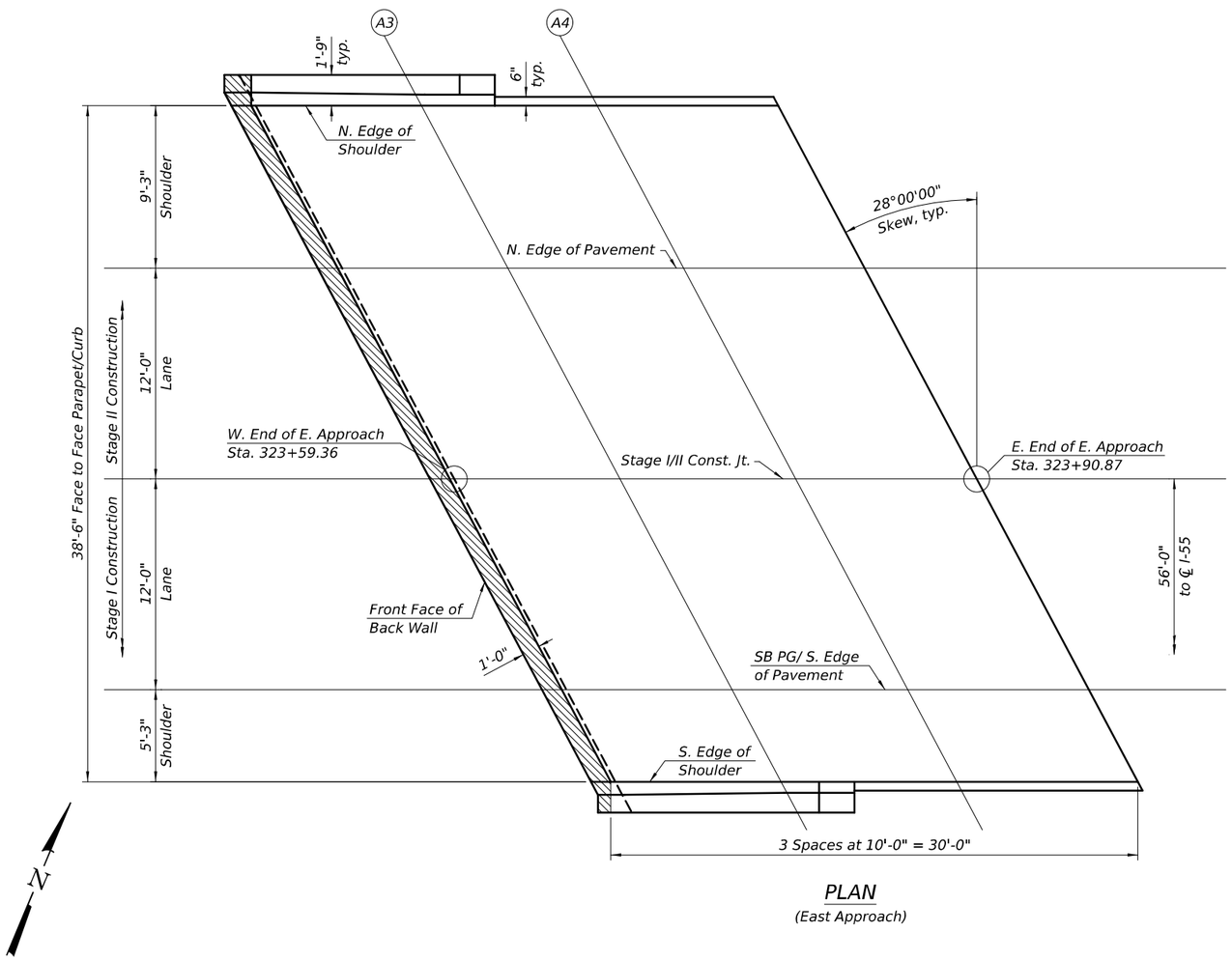

PLAN

(East Approach)

MODEL: Default
FILE NAME: S:\JOL\6300-6399\63461125\Drawings\CAD\ORD-10,12\CADsheets\057-0163-01164-006-TSE2.dgn

STRAND ASSOCIATES
1170 SOUTH HOUBOLT ROAD
JOLIET, ILLINOIS 60431
(815) 744-4200
IDFPR NO. 184-001273

USER NAME = emilyre	DESIGNED - ELR	REVISED -	
	CHECKED - NDR	REVISED -	
PLOT SCALE = 0:2.0000 ':" / in.	DRAWN - CJH	REVISED -	
PLOT DATE = 11/6/2025	CHECKED - ELR	REVISED -	

STATE OF ILLINOIS
DEPARTMENT OF TRANSPORTATION

TOP OF APPROACH SLAB ELEVATIONS (2 OF 4)
STRUCTURE NO. 057-0163 (SB)

SHEET 6 OF 32 SHEETS

F.A.I. RTE.	SECTION	COUNTY	TOTAL SHEETS	SHEET NO.
55	(57-3)BR	MCLEAN	126	87
		CONTRACT NO. 70F37		
		ILLINOIS	FED. AID PROJECT	

11/6/2025 1:27:56 PM

NB PG/N. EDGE OF SHOULDER

Location	Station	Offset to PG	Theoretical Grade Elevations	Theoretical Grade Elevations Adjusted for Grinding
W. End W. Approach	321+89.96	-5.25	761.83	761.85
A1	321+99.96	-5.25	761.81	761.83
A2	322+09.96	-5.25	761.78	761.80
E. End W. Approach	322+19.96	-5.25	761.75	761.77

N. EDGE OF PAVEMENT

Location	Station	Offset to PG	Theoretical Grade Elevations	Theoretical Grade Elevations Adjusted for Grinding
W. End W. Approach	321+92.75	0.00	761.93	761.95
A1	322+02.75	0.00	761.91	761.93
A2	322+12.75	0.00	761.88	761.90
E. End W. Approach	322+22.75	0.00	761.86	761.88

STAGE I/II CONST. JT.

Location	Station	Offset to PG	Theoretical Grade Elevations	Theoretical Grade Elevations Adjusted for Grinding
W. End W. Approach	321+99.13	12.00	762.10	762.12
A1	322+09.13	12.00	762.08	762.10
A2	322+19.13	12.00	762.05	762.07
E. End W. Approach	322+29.13	12.00	762.03	762.05

S. EDGE OF PAVEMENT

Location	Station	Offset to PG	Theoretical Grade Elevations	Theoretical Grade Elevations Adjusted for Grinding
W. End W. Approach	322+05.51	24.00	761.90	761.92
A1	322+15.51	24.00	761.87	761.89
A2	322+25.51	24.00	761.85	761.87
E. End W. Approach	322+35.51	24.00	761.82	761.84

S. EDGE OF SHOULDER

Location	Station	Offset to PG	Theoretical Grade Elevations	Theoretical Grade Elevations Adjusted for Grinding
W. End W. Approach	322+10.43	33.25	761.69	761.72
A1	322+20.43	33.25	761.67	761.69
A2	322+30.43	33.25	761.64	761.66
E. End W. Approach	322+40.43	33.25	761.62	761.64

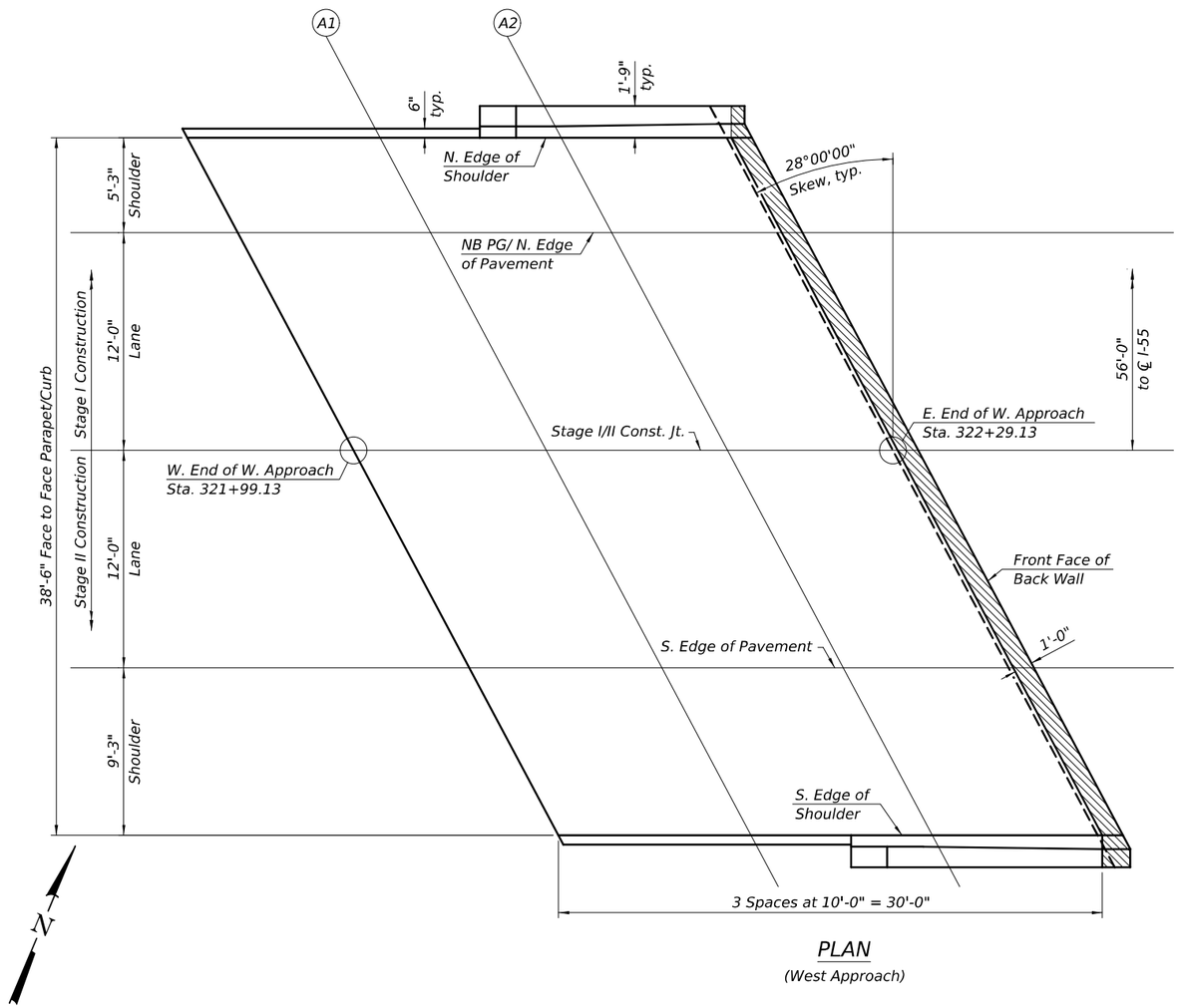

PLAN

(West Approach)

MODEL: Default
FILE NAME: S:\JOL\6300-639\9634\6\125\Drawings\CAD\ORD-10.12\CADsheets\057-0163-0164-007-TSE1.dgn

STRAND ASSOCIATES
1170 SOUTH HOUBOLT ROAD
JOLIET, ILLINOIS 60431
(815) 744-4200
IDFPR NO. 184-001273

USER NAME = emilyre	DESIGNED - ELR	REVISED -	
	CHECKED - NDR	REVISED -	
PLOT SCALE = 0:2.0000 ':" / in.	DRAWN - CJH	REVISED -	
PLOT DATE = 11/6/2025	CHECKED - ELR	REVISED -	

STATE OF ILLINOIS
DEPARTMENT OF TRANSPORTATION

TOP OF APPROACH SLAB ELEVATIONS (3 OF 4)
STRUCTURE NO. 057-0164 (NB)

SHEET 7 OF 32 SHEETS

F.A.I. RTE.	SECTION	COUNTY	TOTAL SHEETS	SHEET NO.
55	(57-3)BR	MCLEAN	126	88
		CONTRACT NO. 70F37		
		ILLINOIS	FED. AID PROJECT	

11/6/2025 1:27:57 PM

NB PG/ N. EDGE OF SHOULDER

Location	Station	Offset to PG	Theoretical Grade Elevations	Theoretical Grade Elevations Adjusted for Grinding
W. End E. Approach	324+11.25	-5.25	761.48	761.50
A3	324+21.25	-5.25	761.51	761.53
A4	324+31.25	-5.25	761.54	761.56
E. End E. Approach	324+41.25	-5.25	761.57	761.60

N. EDGE OF PAVEMENT

Location	Station	Offset to PG	Theoretical Grade Elevations	Theoretical Grade Elevations Adjusted for Grinding
W. End E. Approach	324+14.04	0.00	761.60	761.62
A3	324+24.04	0.00	761.63	761.65
A4	324+34.04	0.00	761.66	761.68
E. End E. Approach	324+44.04	0.00	761.69	761.71

STAGE I/II CONST. JT.

Location	Station	Offset to PG	Theoretical Grade Elevations	Theoretical Grade Elevations Adjusted for Grinding
W. End E. Approach	324+20.42	12.00	761.81	761.83
A3	324+30.42	12.00	761.84	761.86
A4	324+40.42	12.00	761.87	761.89
E. End E. Approach	324+50.42	12.00	761.90	761.92

S. EDGE OF PAVEMENT

Location	Station	Offset to PG	Theoretical Grade Elevations	Theoretical Grade Elevations Adjusted for Grinding
W. End E. Approach	324+26.80	24.00	761.64	761.66
A3	324+36.80	24.00	761.67	761.69
A4	324+46.80	24.00	761.70	761.72
E. End E. Approach	324+56.80	24.00	761.73	761.75

S. EDGE OF SHOULDER

Location	Station	Offset to PG	Theoretical Grade Elevations	Theoretical Grade Elevations Adjusted for Grinding
W. End E. Approach	324+31.72	33.25	761.46	761.48
A3	324+41.72	33.25	761.49	761.51
A4	324+51.72	33.25	761.52	761.54
E. End E. Approach	324+61.72	33.25	761.55	761.58

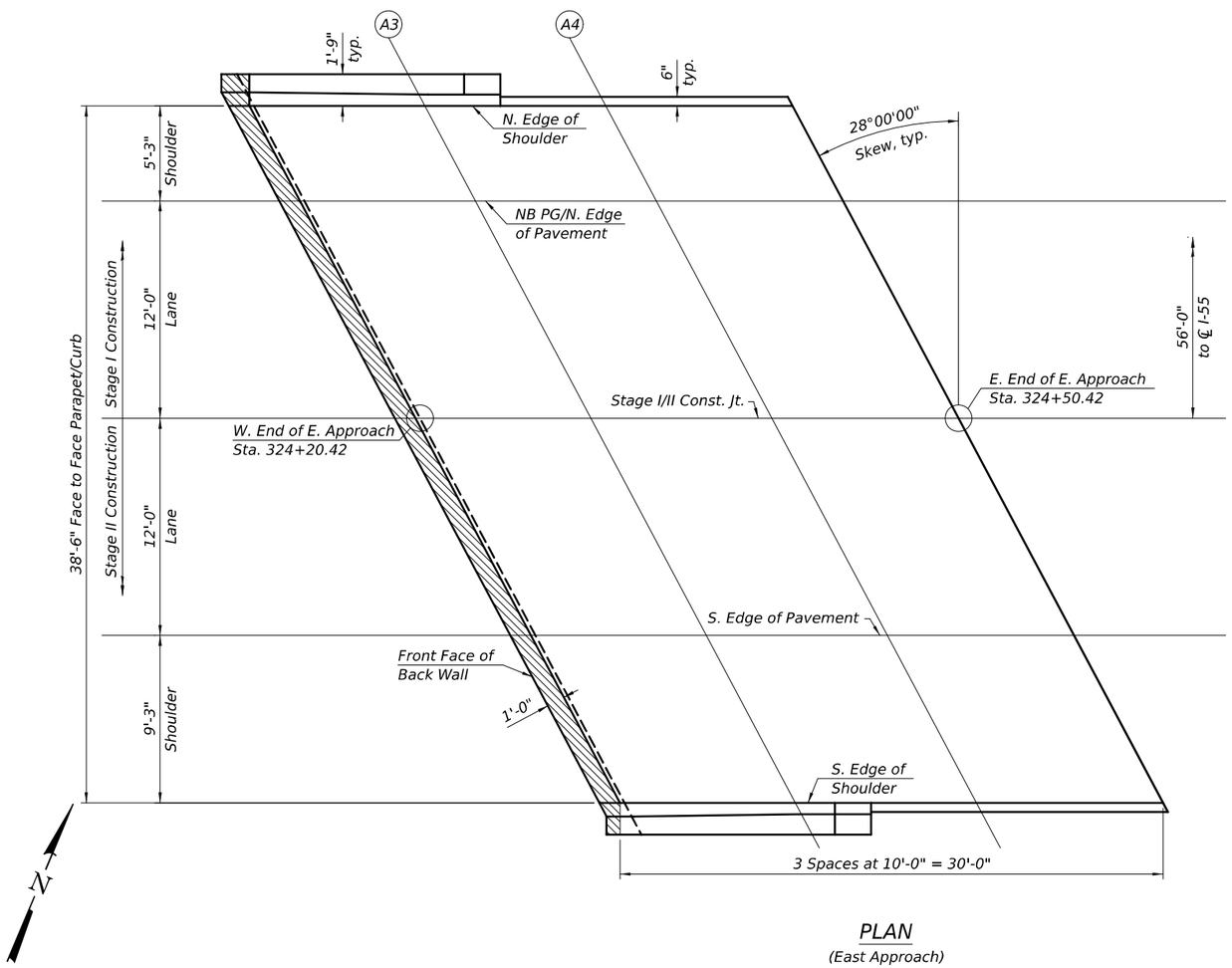

PLAN

(East Approach)

MODEL: Default
FILE NAME: S:\JOL\6300-6399\6346\129\Drawings\CAD\ORD-10.12\CADsheets\057-0163-0164-008-TSE4.dgn
11/6/2025 1:27:58 PM

STRAND ASSOCIATES
1170 SOUTH HOUBOLT ROAD
JOLIET, ILLINOIS 60431
(815) 744-4200
IDFPR NO. 184-001273

USER NAME = emilyre	DESIGNED - ELR	REVISED -	
	CHECKED - NDR	REVISED -	
PLOT SCALE = 0:2.0000 ':" / in.	DRAWN - CJH	REVISED -	
PLOT DATE = 11/6/2025	CHECKED - ELR	REVISED -	

STATE OF ILLINOIS
DEPARTMENT OF TRANSPORTATION

TOP OF APPROACH SLAB ELEVATIONS (4 OF 4)
STRUCTURE NO. 057-0164 (NB)

SHEET 8 OF 32 SHEETS

F.A.I. RTE.	SECTION	COUNTY	TOTAL SHEETS	SHEET NO.
55	(57-3)BR	MCLEAN	126	89
		CONTRACT NO. 70F37		
		ILLINOIS	FED. AID PROJECT	

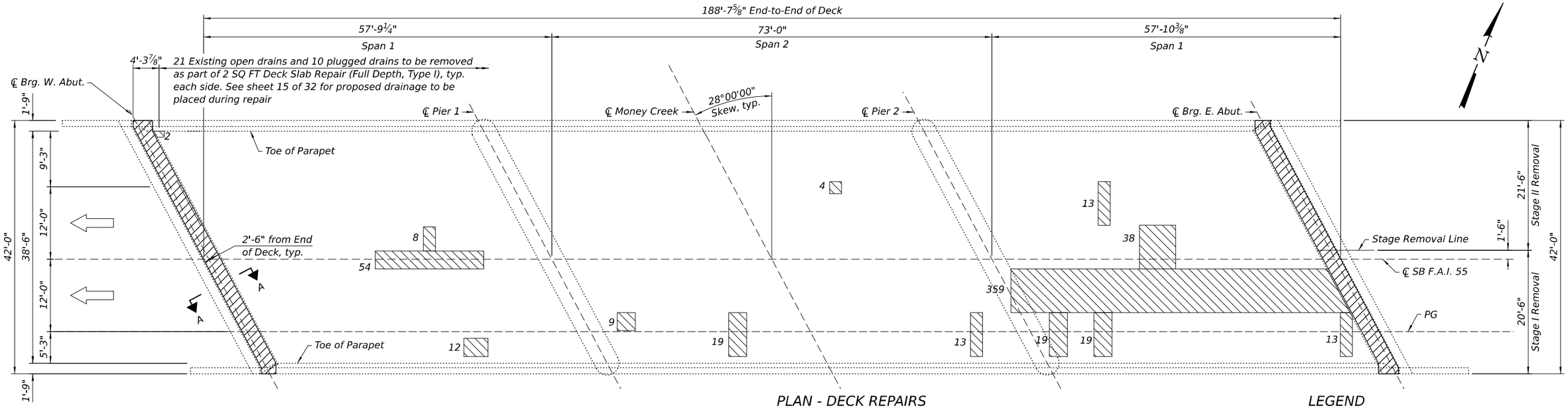

PLAN - DECK REPAIRS

LEGEND

Deck Slab Repair (Full Depth)

Concrete Removal

Note: Numbers on plan indicate area in square feet of adjacent repair shape.

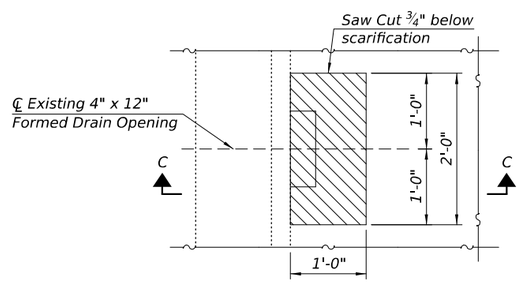

EXISTING DRAIN REMOVAL DETAIL

(62 Locations)

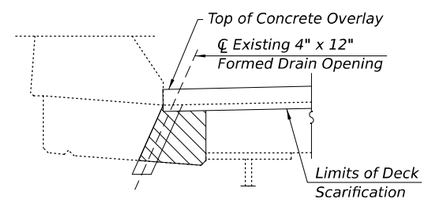

SECTION C-C

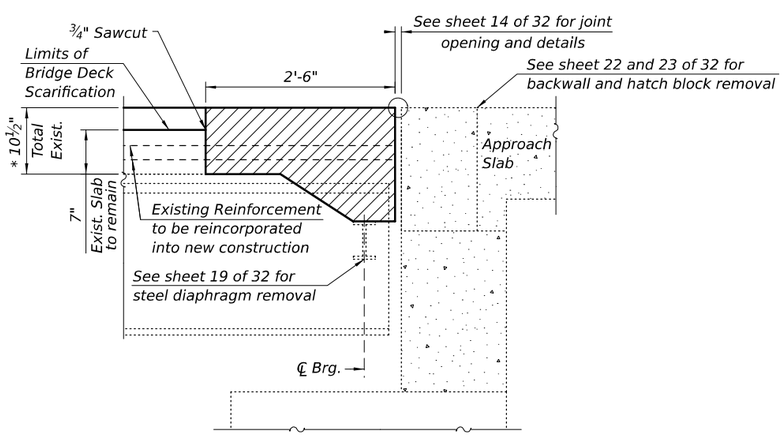

SECTION A-A

(Showing Removal)

Notes:

1. Quantities and limits for deck slab repair shown are estimated for bidding purposes only. The actual areas to be repaired, and the type(s) of repairs to be used, will be determined by the Engineer in the field at the time of construction. The Engineer shall show actual locations and sizes of deck repairs on As-built Plans.

2. The Contractor shall take care not to damage shear studs during concrete removal.

3. The quantity provided for Deck Slab Repair (Partial Depth) is estimated to account for areas of repair that are discovered after deck scarification. The actual areas of repair, if any, will be determined in the field. Areas will be designated for Deck Slab Repair (Partial Depth) only when the top mat of reinforcement is exposed. All other areas will be filled in with the overlay material. The final surface of the Deck Slab Repair (Partial Depth) is to be left intentionally roughened.

4. Prior to beginning work the Contractor will delineate areas of each type of repair and come to agreement with the Engineer on the limits of each repair. The square yardages of each type of repair will be documented and agreed upon for payment. Execution of the repairs will be as directed by the Engineer and the Contractor will be paid for the quantity actually furnished at the unit price bid for the work.

5. Existing reinforcement bars extending into the removal area shall be cleaned, straightened, and incorporated into the new construction. Any reinforcement bars that are damaged during concrete removal shall be replaced with an approved bar splicer or anchorage system at the contractor's expense.

* 6. The total thickness is based on existing plans. The actual thickness may vary.

BILL OF MATERIALS

ITEM	UNIT	QUANTITY
CONCRETE REMOVAL	CU YD	10.0
DECK SLAB REPAIR (PARTIAL)	SQ YD	33
DECK SLAB REPAIR (FULL DEPTH, TYPE I)	SQ YD	15
DECK SLAB REPAIR (FULL DEPTH, TYPE II)	SQ YD	64

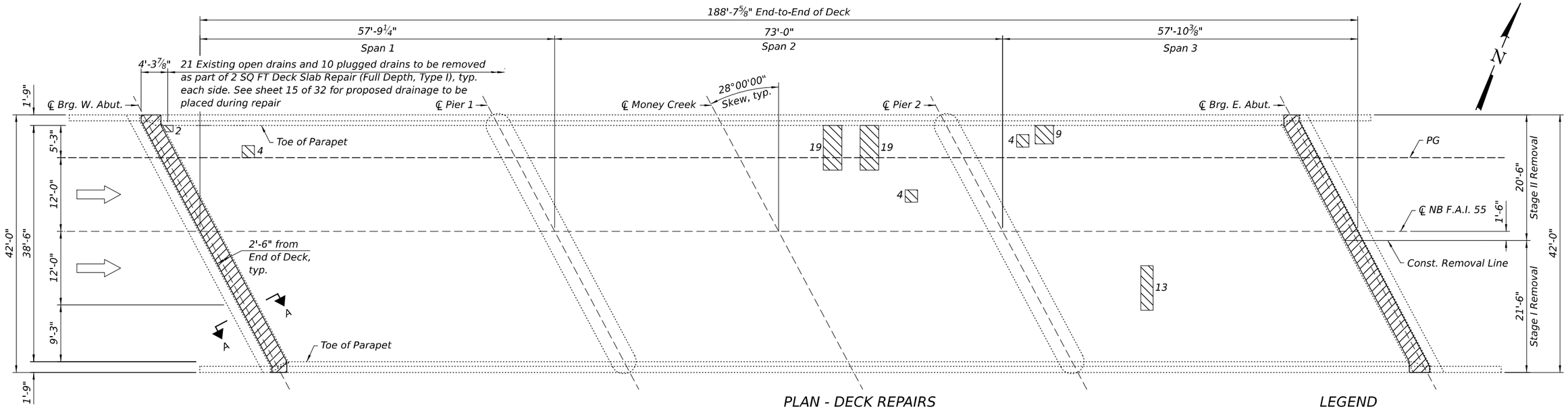

PLAN - DECK REPAIRS

LEGEND

Deck Slab Repair (Full Depth)

Concrete Removal

Note: Numbers on plan indicate area in square feet of adjacent repair shape.

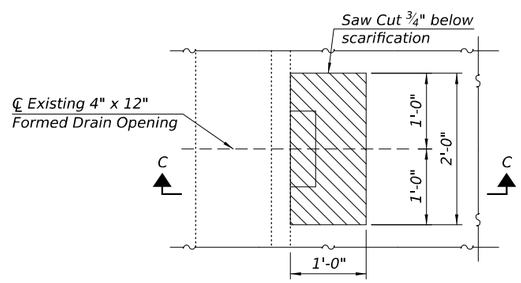

EXISTING DRAIN REMOVAL DETAIL

(62 Locations)

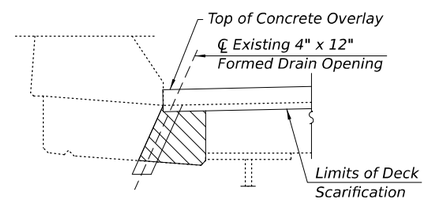

SECTION C-C

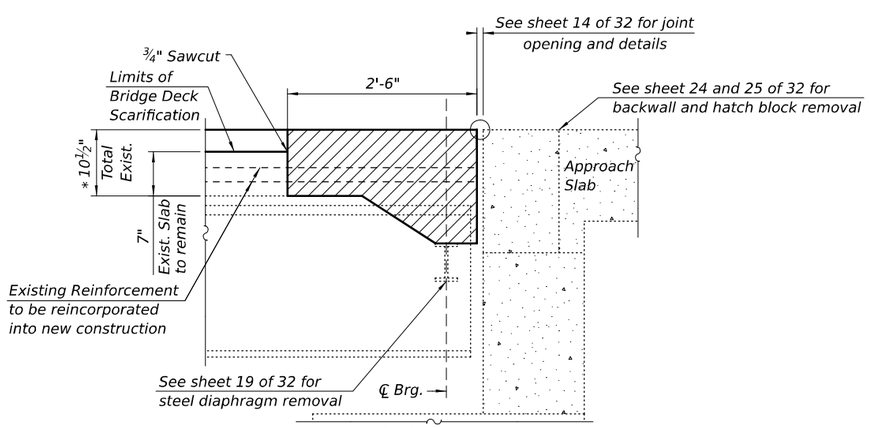

SECTION A-A

(Showing Removal)

Notes:

1. Quantities and limits for deck slab repair shown are estimated for bidding purposes only. The actual areas to be repaired, and the type(s) of repairs to be used, will be determined by the Engineer in the field at the time of construction. The Engineer shall show actual locations and sizes of deck repairs on As-built Plans.

2. The Contractor shall take care not to damage shear studs during concrete removal.

3. The quantity provided for Deck Slab Repair (Partial Depth) is estimated to account for areas of repair that are discovered after deck scarification. The actual areas of repair, if any, will be determined in the field. Areas will be designated for Deck Slab Repair (Partial Depth) only when the top mat of reinforcement is exposed. All other areas will be filled in with the overlay material. The final surface of the Deck Slab Repair (Partial Depth) is to be left intentionally roughened.

4. Prior to beginning work the Contractor will delineate areas of each type of repair and come to agreement with the Engineer on the limits of each repair. The square yardages of each type of repair will be documented and agreed upon for payment. Execution of the repairs will be as directed by the Engineer and the Contractor will be paid for the quantity actually furnished at the unit price bid for the work.

5. Existing reinforcement bars extending into the removal area shall be cleaned, straightened, and incorporated into the new construction. Any reinforcement bars that are damaged during concrete removal shall be replaced with an approved bar splicer or anchorage system at the contractor's expense.

* 6. The total thickness is based on existing plans. The actual thickness may vary.

BILL OF MATERIALS

ITEM	UNIT	QUANTITY
CONCRETE REMOVAL	CU YD	10.0
DECK SLAB REPAIR (PARTIAL)	SQ YD	33
DECK SLAB REPAIR (FULL DEPTH, TYPE I)	SQ YD	16
DECK SLAB REPAIR (FULL DEPTH, TYPE II)	SQ YD	7

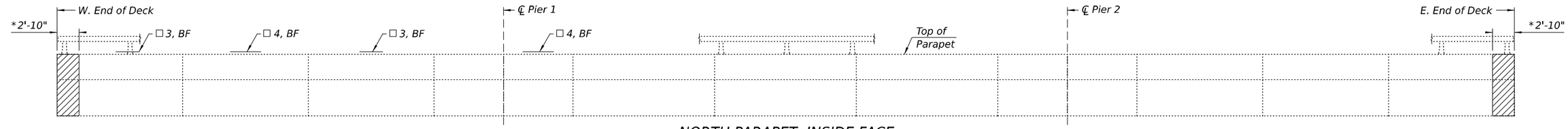

NORTH PARAPET, INSIDE FACE

(Looking North, S.N. 057-0163. Railing not shown full length for clarity)

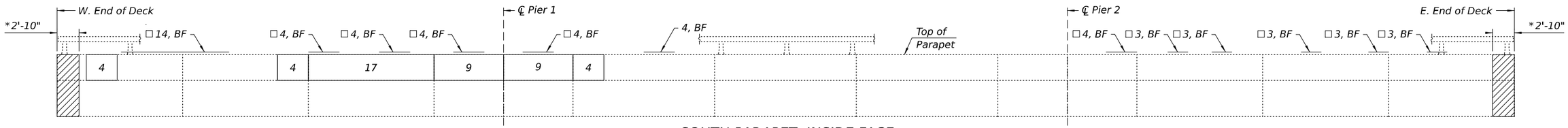

SOUTH PARAPET, INSIDE FACE

(Looking North through Parapet, S.N. 057-0163. Railing not shown full length for clarity)

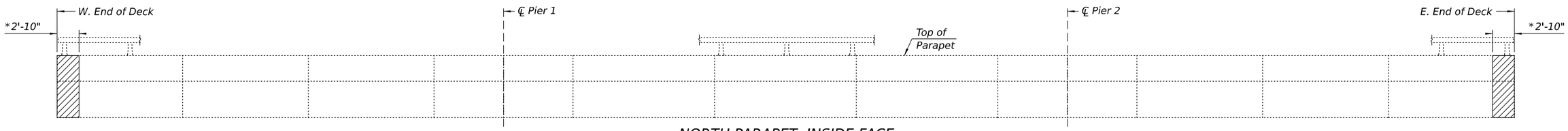

NORTH PARAPET, INSIDE FACE

(Looking North, S.N. 057-0164. Railing not shown full length for clarity)

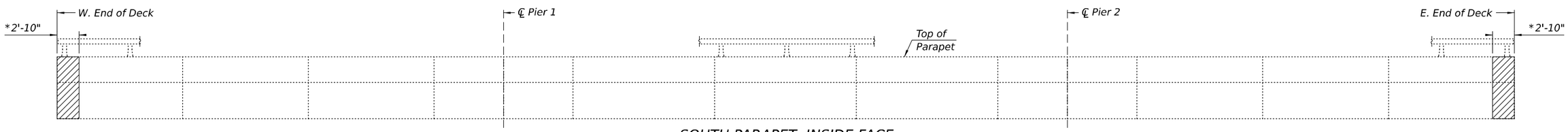

SOUTH PARAPET, INSIDE FACE

(Looking North through Parapet, S.N. 057-0164. Railing not shown full length for clarity)

* Measured along inside face of parapet

Notes:

1. Existing reinforcement bars extending into the removal area shall be cleaned, straightened, and incorporated into the new construction. Any reinforcement bars that are damaged during concrete removal shall be replaced with an approved bar splicer or anchorage system at the contractor's expense.

2. Quantites and limits for structural repair of concrete shown are estimated for bidding purposes only. The actual areas to be repaired, and the type(s) of repairs to be used, will be determined by the Engineer in the field at the time of construction. The Engineer shall show actuall locations and sizes of structural repairs on As-built Plans.

3. For details not shown on plans see existing drawings.

4. The existing handrail attached to the top of the parapets can be unbolted to allow for the replacement of the parapet ends and the structural repair of the parapets. Following the completion of the work, the handrail shall be reattached. The removal and replacement of the handrail will not be measured for payment. The cost will be included in the cost of Concrete Removal. Work shall be in accordance with Special Provision "Removing and Re-erecting Existing Railing".

LEGEND

Structural Repair of Concrete (Depth Equal to of Less Than 5 Inches) (SQ FT)

Concrete Removal

BILL OF MATERIALS

ITEM	UNIT	QUANTITY
CONCRETE REMOVAL	CU YD	2.4
STRUCTURAL REPAIR OF CONCRETE (DEPTH EQUAL TO OR LESS THAN 5 INCHES)	SQ FT	114

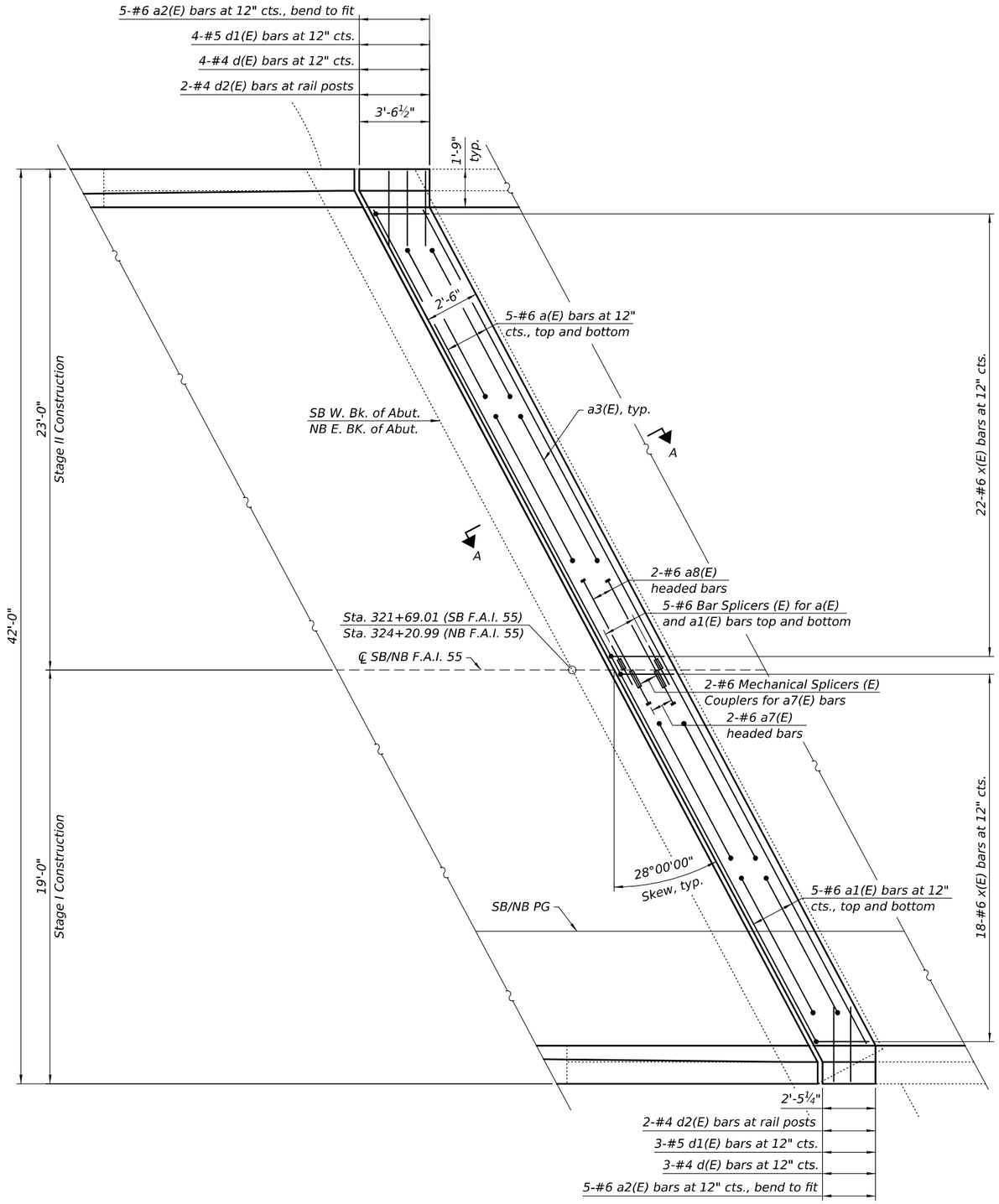

PLAN VIEW AT SB WEST ABUTMENT

(NB East Abutment similar by 180° rotation)

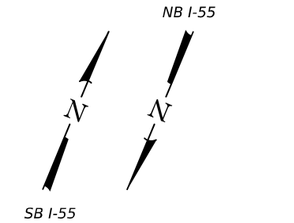

BAR a2(E)

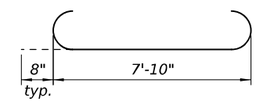

BAR a3(E)

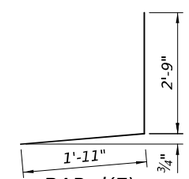

BAR d(E)

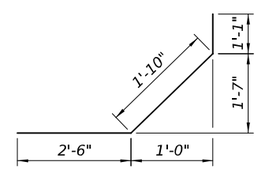

BAR d1(E)

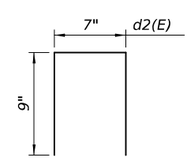

BAR d2(E)

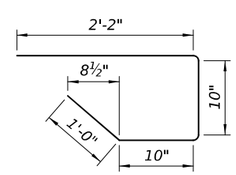

BAR x(E)

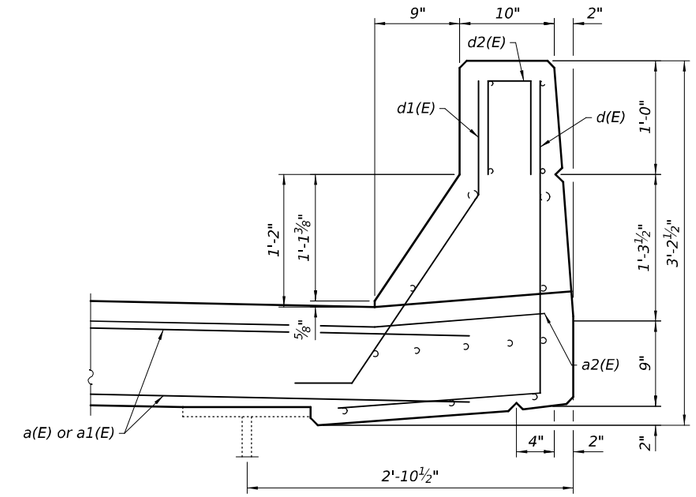

CURB SECTION

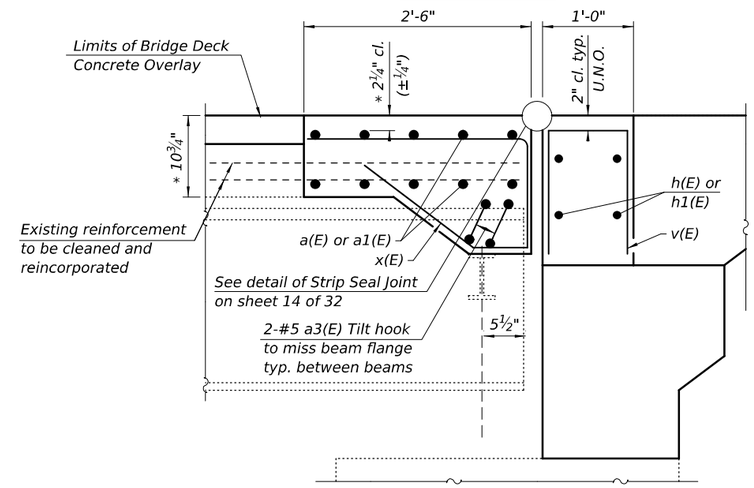

SECTION A-A

* Prior to Grinding

MINIMUM BAR LAP

#6 Bar = 3'-1"

BILL OF MATERIALS BOTH ENDS

Bar	No.	Size	Length	Shape
a(E)	20	#6	24'-8"	
a1(E)	20	#6	20'-2"	
a2(E)	20	#6	4'-7"	
a3(E)	16	#6	9'-2"	
a7(E)	4	#6	1'-1"	
a8(E)	4	#6	5'-3"	
d(E)	14	#4	4'-8"	
d1(E)	14	#5	5'-5"	
d2(E)	8	#4	2'-1"	
x(E)	80	#5	4'-10"	
CONCRETE SUPERSTRUCTURE			CU YD	11.2
REINFORCEMENT BARS, EPOXY COATED			POUND	2,280
BAR SPLICERS			EACH	20
MECHANICAL SPLICERS			EACH	4
BAR TERMINATORS			EACH	8

MODEL: Default
FILE NAME: S:\JOL\6300--639\9634\125\Drawings\CAD\ORD-10,12\CASheets\057-0163-0164-012-WDER.dgn

STRAND ASSOCIATES®
1170 SOUTH HOUBOLT ROAD
JOLIET, ILLINOIS 60431
(815) 744-4200
IDFPR NO. 184-001273

USER NAME = emilyre	DESIGNED - ELR	REVISED -	
	CHECKED - NDR	REVISED -	
PLOT SCALE = 0:2.0000 ':" / in.	DRAWN - CJH	REVISED -	
PLOT DATE = 11/6/2025	CHECKED - ELR	REVISED -	

STATE OF ILLINOIS
DEPARTMENT OF TRANSPORTATION

DECK END REPAIR PLAN (1 OF 2)
STRUCTURE NO. 057-0163 AND 057-0164

SHEET 12 OF 32 SHEETS

F.A.I. RTE.	SECTION	COUNTY	TOTAL SHEETS	SHEET NO.
55	(57-3)BR	MCLEAN	126	93
		CONTRACT NO. 70F37		
		ILLINOIS	FED. AID PROJECT	

11/6/2025 1:28:01 PM

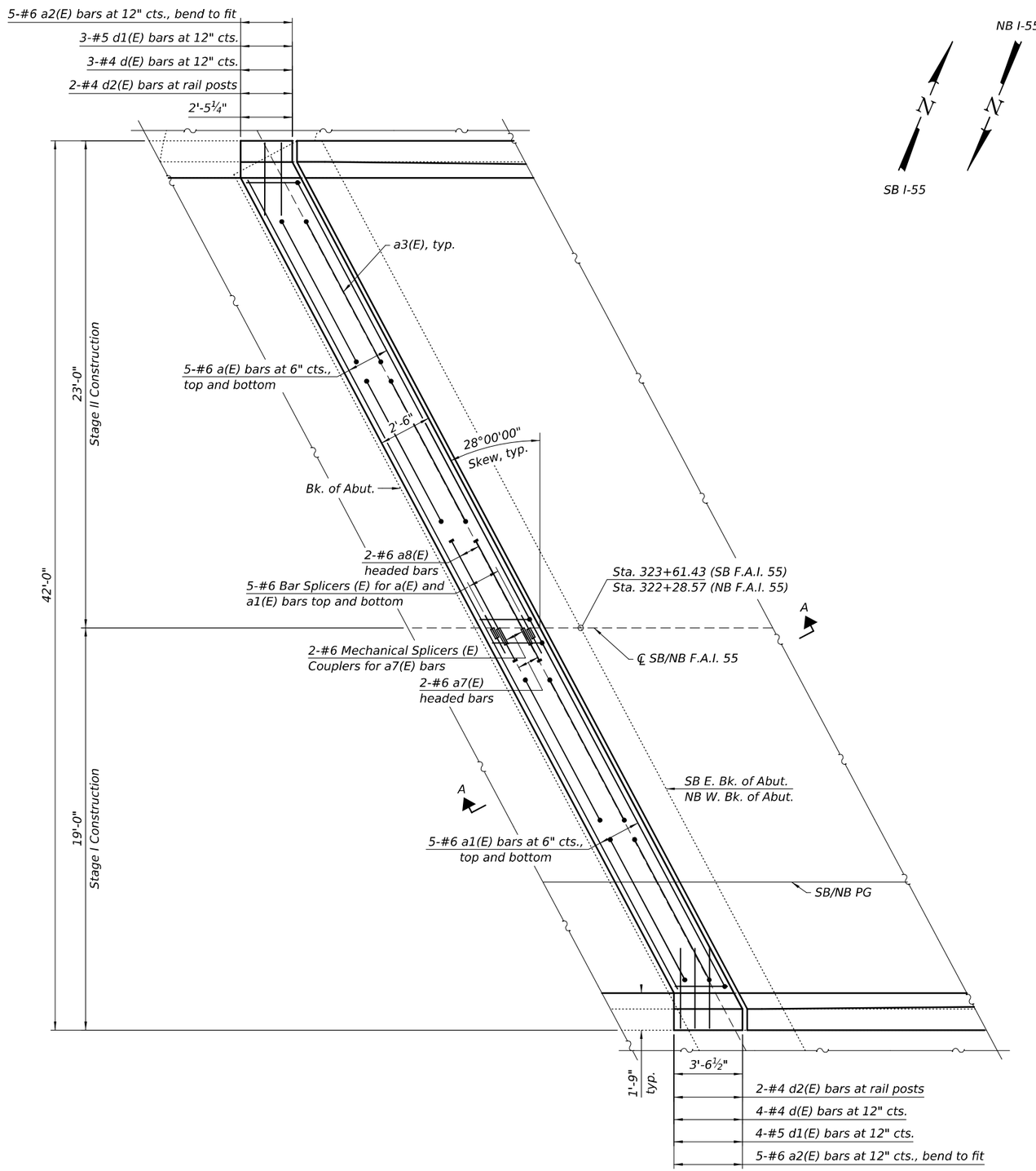

PLAN VIEW AT SB EAST ABUTMENT

(NB West Abutment similar by 180° rotation)

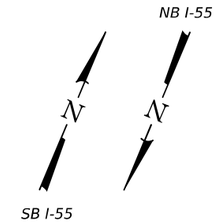

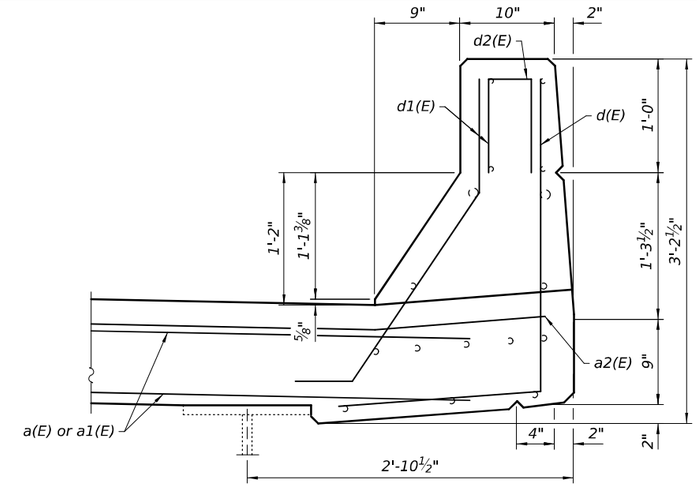

SECTION THROUGH PARAPET

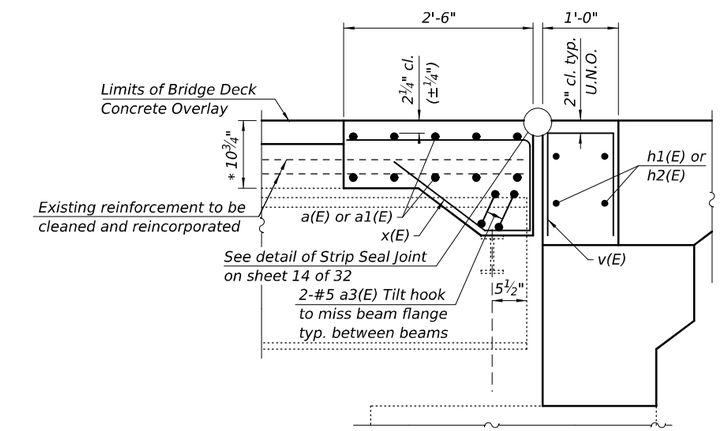

SECTION A-A

* Prior to Grinding

BAR a2(E)

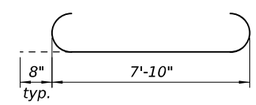

BAR a3(E)

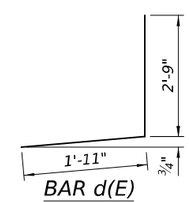

BAR d(E)

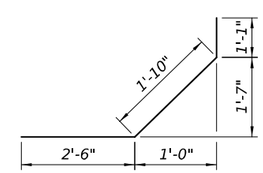

BAR d1(E)

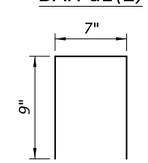

BAR d2(E)

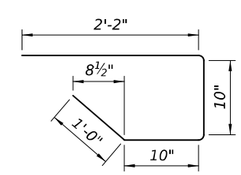

BAR x(E)

MINIMUM BAR LAP

#6 Bar = 3'-1"

BILL OF MATERIALS BOTH ENDS

Bar	No.	Size	Length	Shape
a(E)	20	#6	24'-8"	
a1(E)	20	#6	20'-2"	
a2(E)	20	#6	4'-7"	
a3(E)	16	#6	9'-2"	
a7(E)	4	#6	1'-1"	
a8(E)	4	#6	5'-3"	
d(E)	14	#4	4'-8"	
d1(E)	14	#5	5'-5"	
d2(E)	8	#4	2'-1"	
x(E)	80	#5	4'-10"	
CONCRETE SUPERSTRUCTURE			CU YD	11.2
REINFORCEMENT BARS, EPOXY COATED			POUND	2,280
BAR SPLICERS			EACH	20
MECHANICAL SPLICERS			EACH	4
BAR TERMINATORS			EACH	8

MODEL: Default
FILE NAME: S:\JOL\6300--8399\6346\125\Drawings\CAD\ORD-10.12\CADsheets\057-0163-0164-013-EDER.dgn

STRAND ASSOCIATES
1170 SOUTH HOUBOLT ROAD
JOLIET, ILLINOIS 60431
(815) 744-4200
IDFPR NO. 184-001273

USER NAME = emilyre	DESIGNED - ELR	REVISED -	
	CHECKED - NDR	REVISED -	
PLOT SCALE = 0:2.0000 ':" / in.	DRAWN - CJH	REVISED -	
PLOT DATE = 11/6/2025	CHECKED - ELR	REVISED -	

STATE OF ILLINOIS
DEPARTMENT OF TRANSPORTATION

DECK END REPAIR PLAN (2 OF 2)
STRUCTURE NO. 057-0163 AND 057-0164

SHEET 13 OF 32 SHEETS

F.A.I. RTE.	SECTION	COUNTY	TOTAL SHEETS	SHEET NO.
55	(57-3)BR	MCLEAN	126	94

CONTRACT NO. 70F37

ILLINOIS | FED. AID PROJECT

11/6/2025 1:28:02 PM

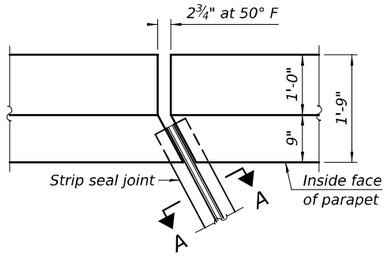

PLAN AT PARAPET

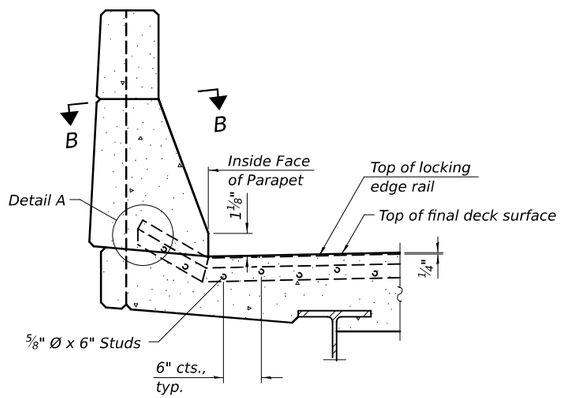

SECTION AT PARAPET

(Skews > 30° shown. Skews ≤ 30° similar except as shown in plan view.)

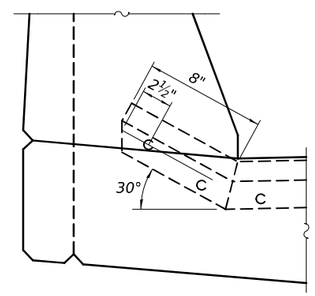

DETAIL A

Notes:

The strip seal shall be made continuous and shall have a minimum thickness of ¼". The configuration of the strip seal shall match the configuration of the locking edge rails. Open or "webbed" strip seal gland configurations are not permitted. The gland shall be sized for a maximum rated movement of 4 inches.

The locking edge rails depicted are configured for typical applications and are conceptual only. The actual configuration of the locking edge rails and matching strip seal may vary from manufacturer to manufacturer provided they fit the application and meet the minimum anchorage shown. Flanged edge rails, however, will not be allowed. Locking edge rails may exceed the 4½" maximum depth provided the anchorage system is revised according to the manufacturer's recommendation.

The manufacturer's recommended installation methods shall be followed.

All steel components shall be galvanized after fabrication according to Article 520.03 of the Standard Specifications.

The Maximum space between locking edge rail segments shall be c" and sealed with a suitable sealant; however, any rail joint within 10' measured perpendicular to the face of the curb or parapet shall be welded as shown in the locking edge rail splice detail.

Cost of parapet sliding plates, embedded plates, and anchorage studs included with Preformed Joint Strip Seal.

39" constant slope barrier shown, 44" constant slope barrier similar as noted.

The concrete opening below the strip seal will vary based on the locking edge rail chosen by the Contractor. Deck and parapet lengths shown elsewhere in the plans are dimensioned to the concrete opening, not the joint opening, and are based on the rolled locking edge rail. If the Contractor elects to use a different locking edge rail, dimensional adjustments may be required. One exception to this would be the strip seal joint at the end of the precast bridge approach slab. For these cases the pavement connector length shall be adjusted, not the length of the bridge approach slab.

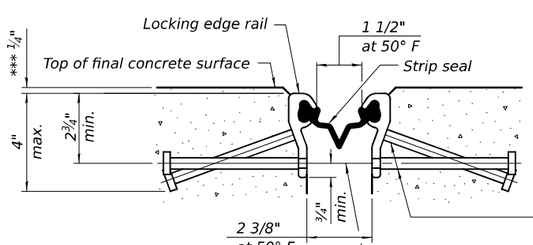

SHOWING ROLLED RAIL JOINT

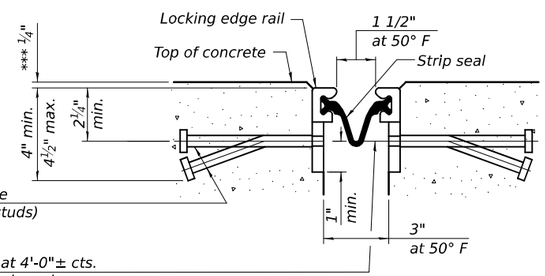

SHOWING WELDED RAIL JOINT

* ⅝" Ø x 6" studs at 6" cts. (alternate angled/bent studs with horizontal studs)

⅜" Ø threaded rods in 7/16" Ø holes at 4'-0"± cts. for holding the proper joint opening based on the temperature during the deck pour. Place to miss studs. All rods shall be burned, or sawed off flush with the plates after concrete is set.

SECTION A-A

* Granular or solid flux filled headed studs conforming to Article 1006.32 of the Std. Specs., automatically end welded.

*** After Grinding

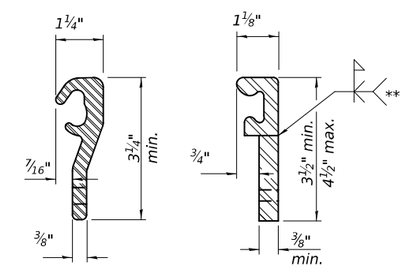

ROLLED (EXTRUDED) RAIL

WELDED RAIL

LOCKING EDGE RAILS

** Back gouge not required if complete joint penetration is verified by mock-up.

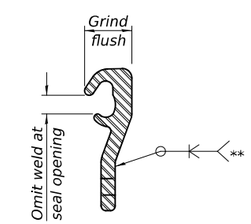

LOCKING EDGE RAIL SPLICE

The inside of the locking edge rail groove shall be free of weld residue. Rolled rail shown, welded rail similar.

BILL OF MATERIAL

ITEM	UNIT	QUANTITY
PREFORMED JOINT STRIP SEAL	FOOT	180.0

MODEL: Default
FILE NAME: S:\JOL\6300--639\96346\125\Drawings\CAD\ORD-10.12\CAD sheets\057-0163-0164-014-PJSS.dgn

STRAND ASSOCIATES
1170 SOUTH HOUBOLT ROAD
JOLIET, ILLINOIS 60431
(815) 744-4200
IDFPR NO. 184-001273

USER NAME = emilyre	DESIGNED - ELR	REVISED -	
	CHECKED - NDR	REVISED -	
PLOT SCALE = 0:2.0000 ':" / in.	DRAWN - CJH	REVISED -	
PLOT DATE = 11/6/2025	CHECKED - ELR	REVISED -	

STATE OF ILLINOIS
DEPARTMENT OF TRANSPORTATION

PREFORMED JOINT STRIP SEAL
STRUCTURE NO. 057-0163 AND 057-0164

SHEET 14 OF 32 SHEETS

F.A.I. RTE.	SECTION	COUNTY	TOTAL SHEETS	SHEET NO.
55	(57-3)BR	MCLEAN	126	95

CONTRACT NO. 70F37

ILLINOIS FED. AID PROJECT

11/6/2025 1:28:03 PM

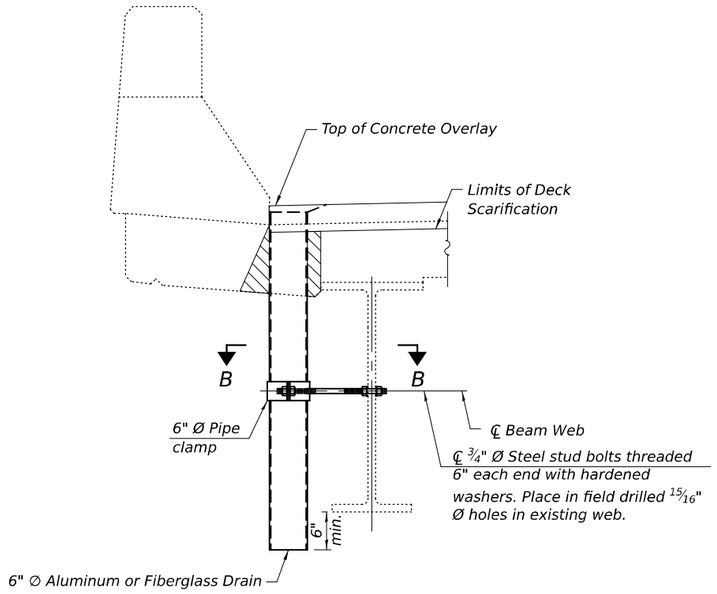

DRAIN REPLACEMENT DETAIL

(44 Locations, see plan)

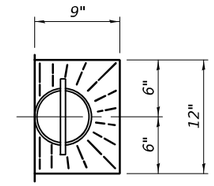

TOP PLAN

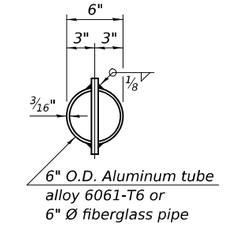

TOP PLAN

(Showing aluminum tube)

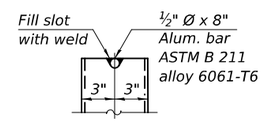

ALUMINUM TUBE

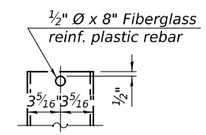

FIBERGLASS PIPE

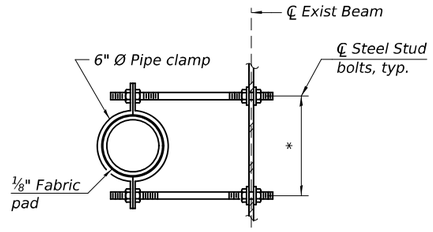

SECTION B-B

*Dimension as required by pipe clamp

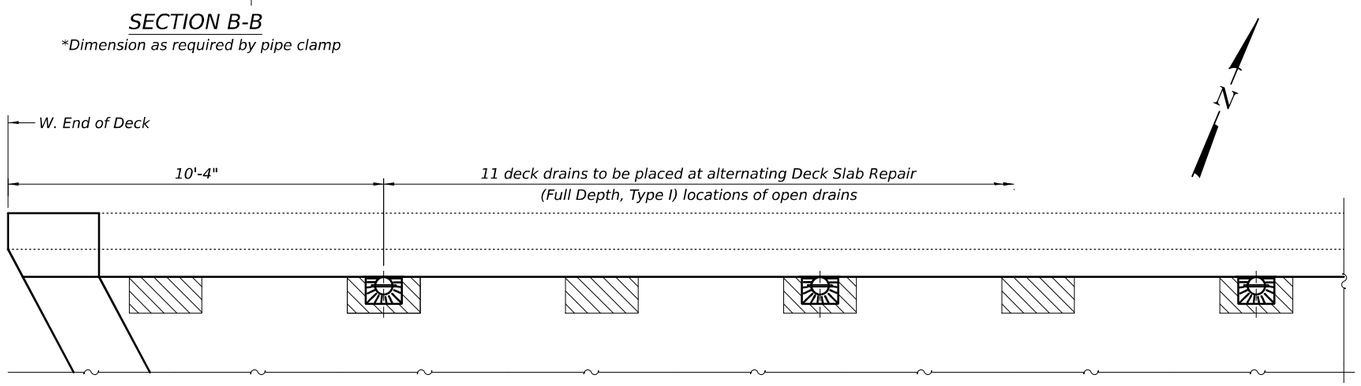

DRAINAGE PLACEMENT PLAN

(Drawn for North Parapet for both S.N. 057-0163 and 057-0164.
South Parapet similar with 180° rotation.)

LEGEND

Deck Slab Repair (Full Depth, Type I)
See deck repair plan for locations

Notes:

1. Fiberglass pipe shall conform to ASTM D 2996, with short-time rupture strength hoop tensile stress of 30,000 p.s.i. minimum.
2. The exterior surfaces of the floor drains shall be painted according to Article 506 with the finish coat as specified. The exterior surfaces of the drains shall be cleaned according to the Society of Protective Coating's Spec. SSPC-SP1 prior to painting.
3. The clamping device shall be galvanized according to AASHTO M 232. Cost of clamping device included with Floor Drains.
4. Cost to remove existing floor drains is included in the cost of Deck Slab Repair (Full Depth, Type I).

BILL OF MATERIAL

ITEM	UNIT	QUANTITY
FLOOR DRAINS	EACH	44

MODEL: Default
FILE NAME: S:\JOL\6300--639\96346\125\Drawings\CAD\ORD-10.12\CADsheets\057-0163-0164-015-DD.dgn

STRAND ASSOCIATES
1170 SOUTH HOUBOLT ROAD
JOLIET, ILLINOIS 60431
(815) 744-4200
IDFPR NO. 184-001273

USER NAME = emilyre	DESIGNED - ELR	REVISED -	
	CHECKED - NDR	REVISED -	
PLOT SCALE = 0:2.0000 ':" / in.	DRAWN - CJH	REVISED -	
PLOT DATE = 11/6/2025	CHECKED - ELR	REVISED -	

STATE OF ILLINOIS
DEPARTMENT OF TRANSPORTATION

DRAINAGE DETAILS
STRUCTURE NO. 057-0163 AND 057-0164

SHEET 15 OF 32 SHEETS

F.A.I. RTE.	SECTION	COUNTY	TOTAL SHEETS	SHEET NO.
55	(57-3)BR	MCLEAN	126	96

CONTRACT NO. 70F37

ILLINOIS FED. AID PROJECT

11/6/2025 1:28:04 PM

TOP AND BOTTOM ELEVATIONS FOR APPROACH FOOTING - S.N. 057-0163

East Approach		
Point	Top	Bottom
A	760.30	759.46
B	760.72	759.89
C	760.55	759.72
D	760.45	759.62
E	760.34	759.50
F	760.76	759.92
G	760.59	759.76
H	760.49	759.66

TOP AND BOTTOM ELEVATIONS FOR APPROACH FOOTING - S.N. 057-0164

West Approach		
Point	Top	Bottom
A	760.42	759.59
B	760.83	760.00
C	760.66	759.83
D	760.56	759.72
E	760.45	759.62
F	760.86	760.03
G	760.69	759.86
H	760.59	759.75

MINIMUM BAR LAP

#5 Bar = 2'-0"
#8 Bar = 5'-2"

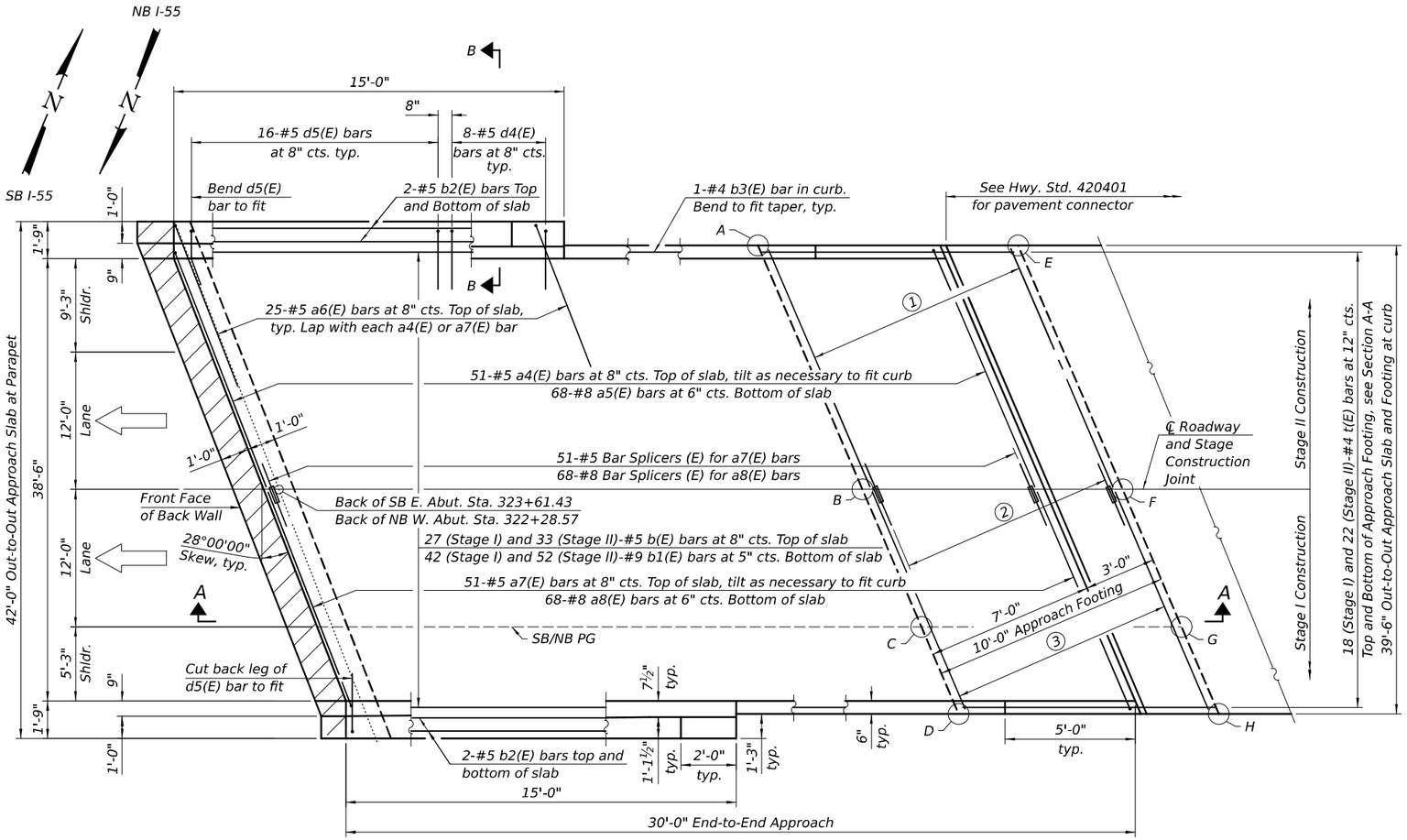

PLAN

(SB East approach slab shown; NB West approach slab similar by 180° rotation)

① 20-#5 w(E) bars at 6" cts. Top and Bottom of Approach Footing. See Section A-A.

② 20-#5 Bar Splicers (E) for w1(E) bars Top and Bottom of Approach Footing. See Section A-A.

③ 20-#5 w1(E) bars at 6" cts. Top and Bottom of Approach Footing. See Section A-A.

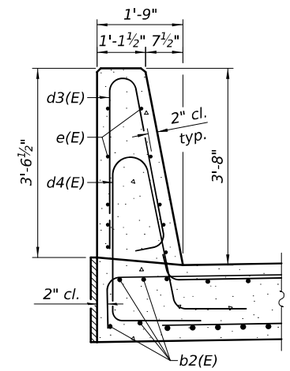

SECTION B-B

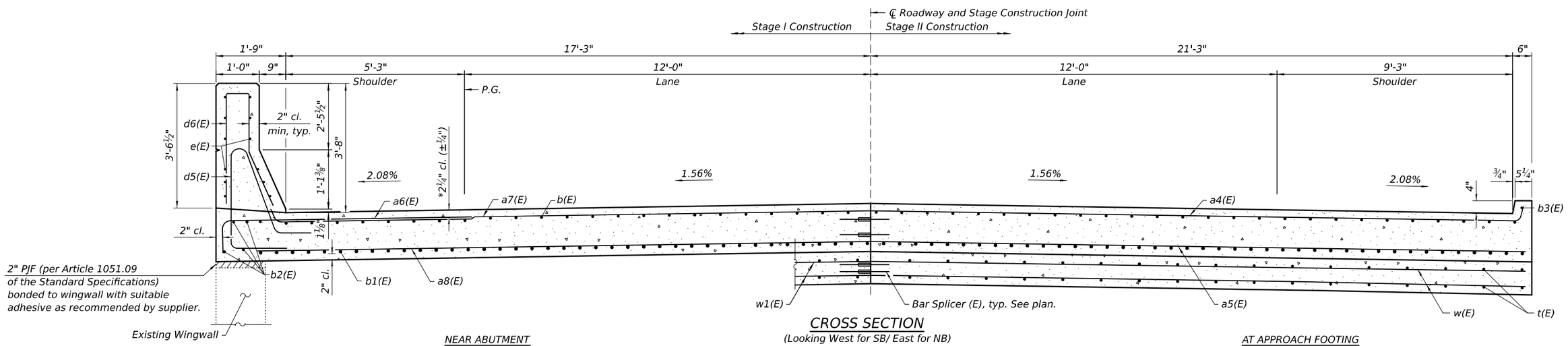

CROSS SECTION

(Looking West for SB/ East for NB)

* After grinding

MODEL: Default
FILE NAME: S:\JOL\6300-639916346\125\Drawings\CAD\ORD-10.12\CADsheets\057-0163-0164-016-ASP1.dgn

STRAND ASSOCIATES®
1170 SOUTH HOUBOLT ROAD
JOLIET, ILLINOIS 60431
(815) 744-4200
IDFPR NO. 184-001273

USER NAME = emilyre	DESIGNED - ELR	REVISED -	
	CHECKED - NDR	REVISED -	
PLOT SCALE = 0:2.0000 ':" / in.	DRAWN - CJH	REVISED -	
PLOT DATE = 11/6/2025	CHECKED - ELR	REVISED -	

STATE OF ILLINOIS
DEPARTMENT OF TRANSPORTATION

APPROACH SLAB PLAN (1 OF 2)
STRUCTURE NO. 057-0163 AND 057-0164

SHEET 16 OF 32 SHEETS

F.A.I. RTE.	SECTION	COUNTY	TOTAL SHEETS	SHEET NO.
55	(57-3)BR	MCLEAN	126	97
		CONTRACT NO. 70F37		
		ILLINOIS	FED. AID PROJECT	

11/6/2025 1:28:05 PM

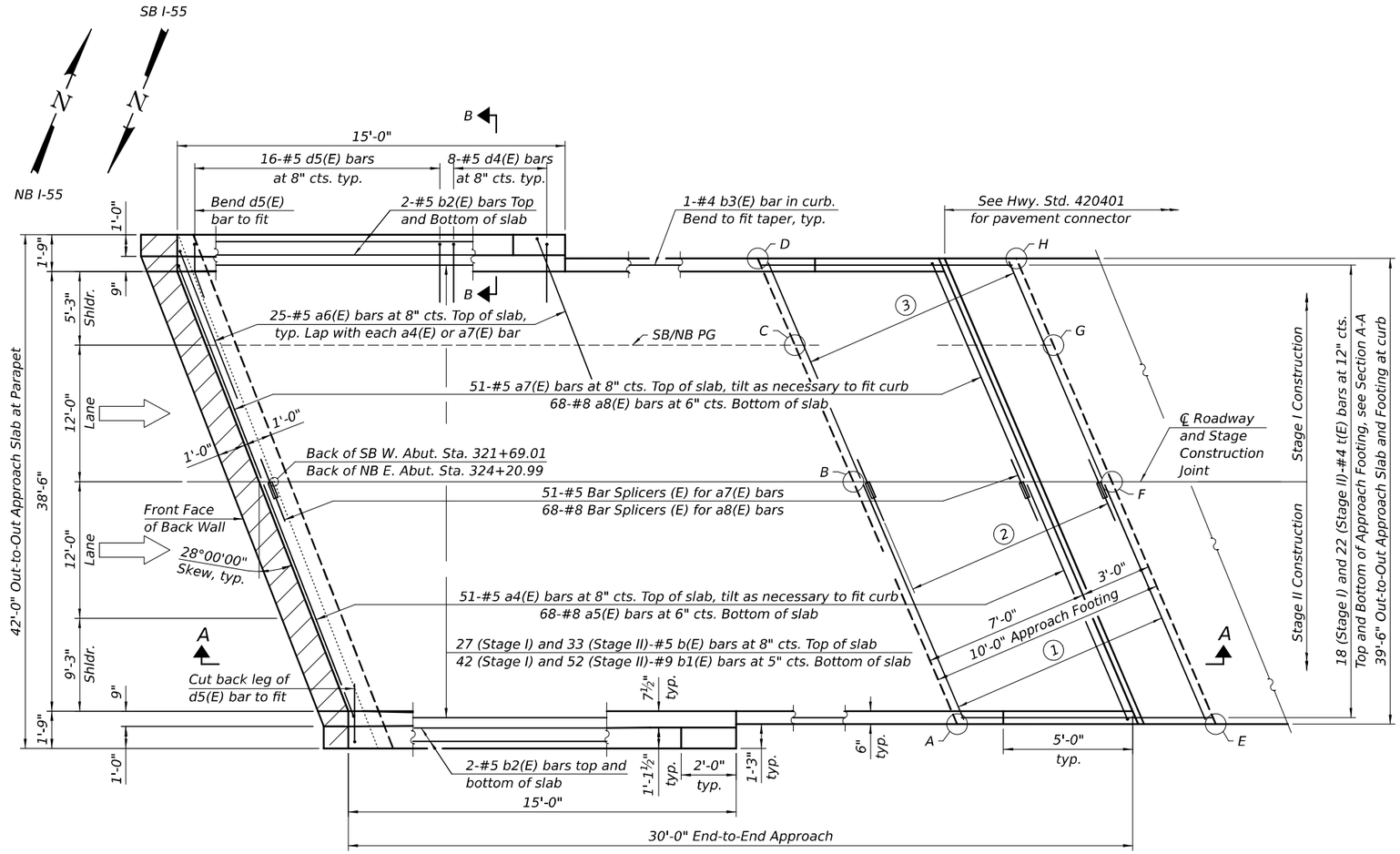

PLAN

(NB East approach slab shown; SB West approach slab similar by 180° rotation)

TOP AND BOTTOM ELEVATIONS FOR APPROACH FOOTING - S.N. 057-0163

West Approach		
Point	Top	Bottom
A	760.73	759.90
B	761.07	760.24
C	760.86	760.03
D	760.74	759.90
E	760.78	759.94
F	761.12	760.28
G	760.91	760.07
H	760.78	759.95

TOP AND BOTTOM ELEVATIONS FOR APPROACH FOOTING - S.N. 057-0164

East Approach		
Point	Top	Bottom
A	760.28	759.44
B	760.63	759.79
C	760.42	759.58
D	760.30	759.46
E	760.38	759.55
F	760.66	759.83
G	760.45	759.62
H	760.33	759.50

MINIMUM BAR LAP

#5 Bar = 2'-0"
#8 Bar = 5'-2"

1. 20-#5 w(E) bars at 6" cts. Top and Bottom of Approach Footing. See Section A-A.
2. 20-#5 Bar Splicers (E) for w1(E) bars Top and Bottom of Approach Footing. See Section A-A.
3. 20-#5 w1(E) bars at 6" cts. Top and Bottom of Approach Footing. See Section A-A.

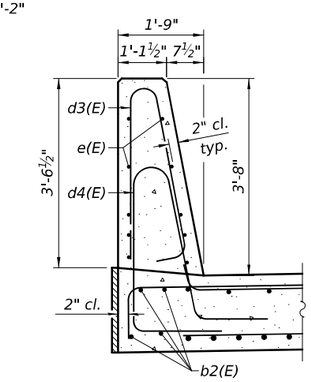

SECTION B-B

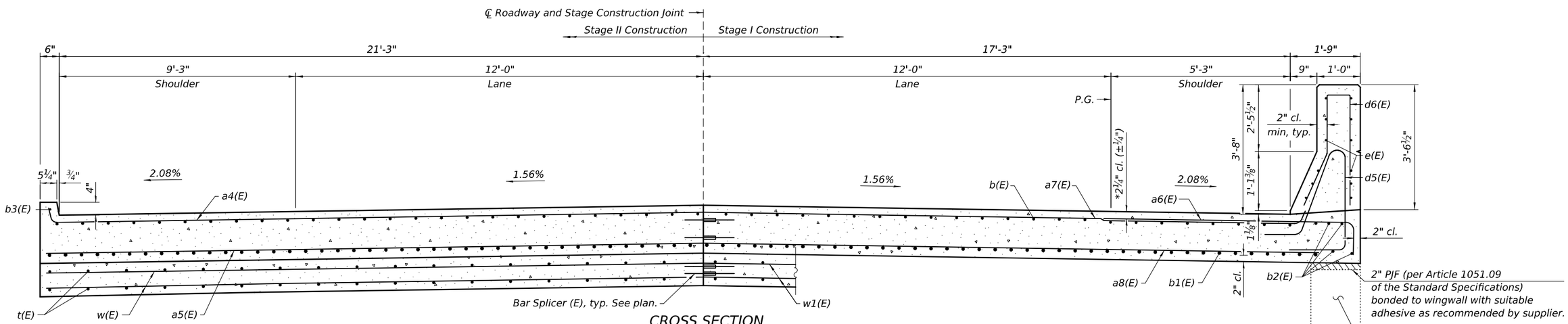

AT APPROACH FOOTING

CROSS SECTION

(Looking West for NB/ East for SB)

NEAR ABUTMENT

MODEL: Default
FILE NAME: S:\JOL\6300-6399\6348\125\Drawings\CAD\ORD-10.12\CADsheets\057-0163-0164-017-ASP2.dgn

STRAND ASSOCIATES
1170 SOUTH HOUBOLT ROAD
JOLIET, ILLINOIS 60431
(815) 744-4200
IDFPR NO. 184-001273

USER NAME = CodyH	DESIGNED - ELR	REVISED -	
	CHECKED - NDR	REVISED -	
PLOT SCALE = 0:2.0000 ':" / in.	DRAWN - CJH	REVISED -	
PLOT DATE = 12/5/2025	CHECKED - ELR	REVISED -	

STATE OF ILLINOIS
DEPARTMENT OF TRANSPORTATION

APPROACH SLAB PLAN (2 OF 2)
STRUCTURE NO. 057-0163 AND 057-0164

SHEET 17 OF 32 SHEETS

F.A.I. RTE.	SECTION	COUNTY	TOTAL SHEETS	SHEET NO.
55	(57-3)BR	MCLEAN	126	98

CONTRACT NO. 70F37

ILLINOIS | FED. AID PROJECT

12/5/2025 1:37:51 PM

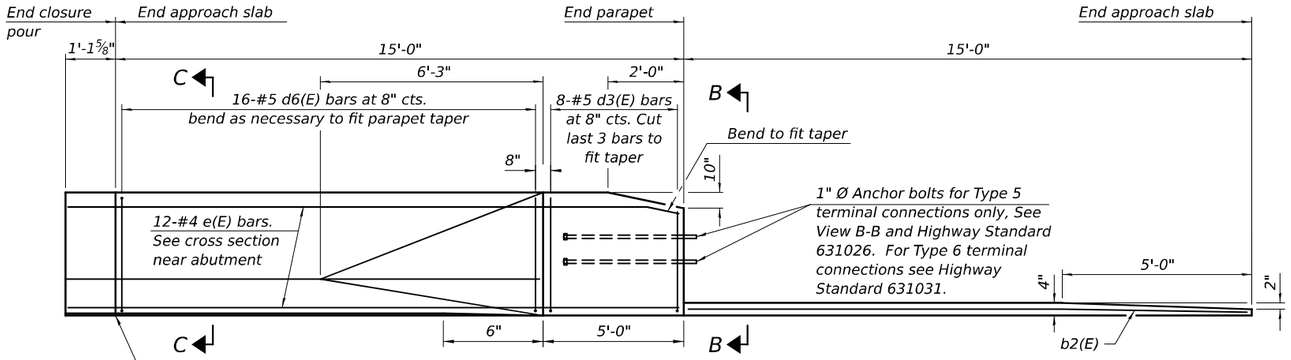

INSIDE ELEVATION OF PARAPET AND CURB

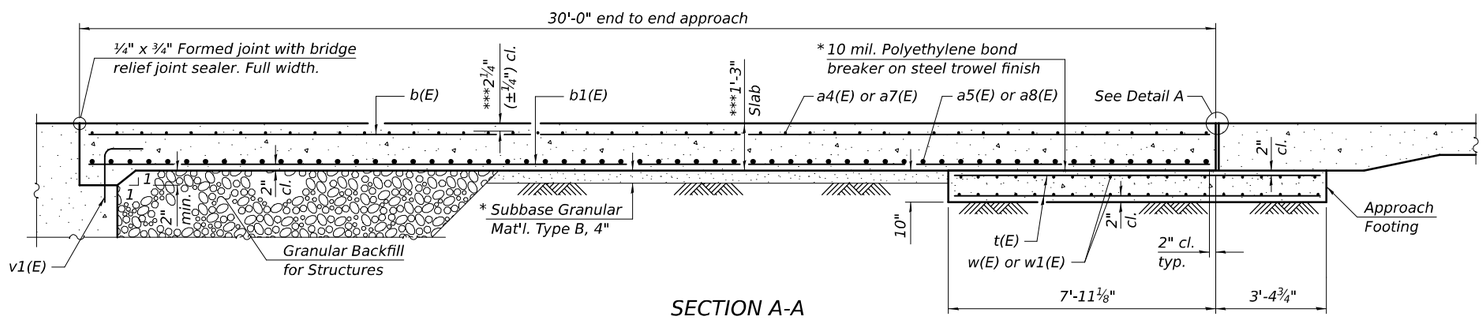

SECTION A-A

Notes:

The joint opening shall be adjusted for temperature per Article 520.04 of the Standard Specifications. However, since this detail is for jointless structures, the length of bridge used to calculate the adjustment shall be equal to half the total bridge length plus the length of the bridge approach slab.

Parapet concrete shall be paid for as Concrete Superstructure.

Approach slab shall be paid for as Concrete Superstructure (Approach Slab).

Approach footing concrete shall be paid for as Concrete Structures.

The approach footing maximum applied service bearing pressure (Qmax) = 2.0 ksf.

Cost of excavation for approach footing included with Concrete Structures.

For Granular Backfill for Structures and drainage treatment details, see sheet 2 of 32.

The approach parapet shall be cast prior to or concurrently with the closure pour parapet to incorporate the e(E) bars into the closure pour parapet.

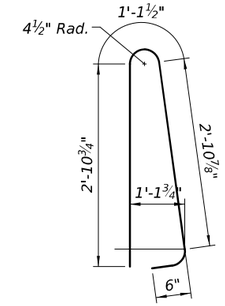

BAR d3(E)

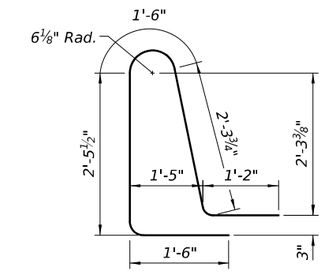

BAR d4(E)

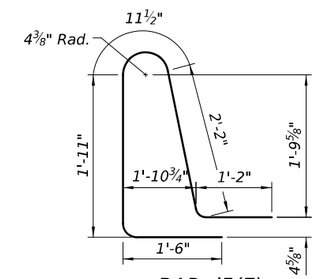

BAR d5(E)

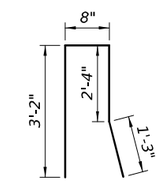

BAR d6(E)

FOUR APPROACHES BILL OF MATERIAL

Bar	No.	Size	Length	Shape
a4(E)	204	#5	24'-9"	
a5(E)	272	#8	24'-5"	
a6(E)	200	#5	7'-4"	
a7(E)	204	#5	20'-2"	
a8(E)	272	#8	19'-10"	
b(E)	240	#5	29'-8"	
b1(E)	376	#9	29'-8"	
b2(E)	32	#5	14'-8"	
b3(E)	8	#4	14'-8"	
d3(E)	64	#5	7'-6"	
d4(E)	64	#5	9'-0"	
d5(E)	128	#5	7'-9"	
d6(E)	128	#5	7'-5"	
e(E)	96	#4	15'-9"	
t(E)	320	#4	10'-11"	
w(E)	160	#5	24'-3"	
w1(E)	160	#5	19'-9"	
CONCRETE STRUCTURES			CU YD	55.4
CONCRETE SUPERSTRUCTURE			CU YD	21.8
CONCRETE SUPERSTRUCTURE (APPROACH SLAB)			CU YD	231.4
REINFORCEMENT BARS, EPOXY COATED			POUND	102,960
BAR SPLICERS			EACH	636

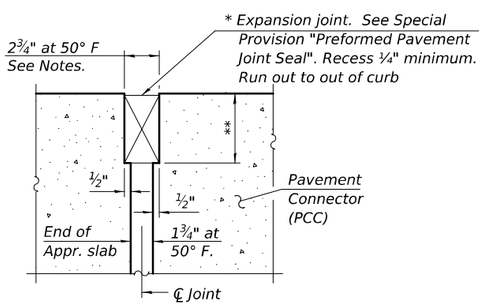

DETAIL A

(at Rt. ∠'s)

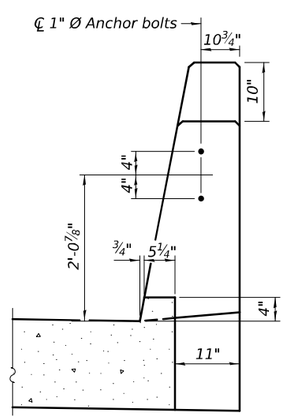

VIEW B-B

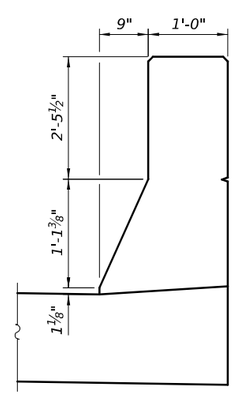

SECTION C-C

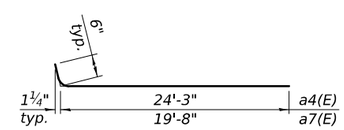

BAR a4(E), a7(E)

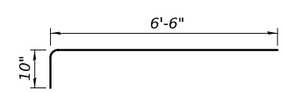

BAR a6(E)

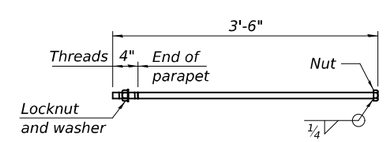

*1" Ø ANCHOR BOLT

(Anchor bolt assemblies shall be galvanized according to Article 1006.09 of the Standard Specifications)

* Cost included with Concrete Superstructure (Approach Slab).

** Per manufacturer recommendations

*** After grinding

MODEL: Default
FILE NAME: S:\JOL\6300--6399\6346\125\Drawings\CAD\ORD-10.12\CADsheets\057-0163-0164-0118-ASD.dgn

STRAND ASSOCIATES
1170 SOUTH HOUBOLT ROAD
JOLIET, ILLINOIS 60431
(815) 744-4200
IDFPR NO. 184-001273

12/5/2025 1:38:21 PM

USER NAME = CodyH	DESIGNED - ELR	REVISED -	
	CHECKED - NDR	REVISED -	
PLOT SCALE = 0:2.0000 ':" / in.	DRAWN - CJH	REVISED -	
PLOT DATE = 12/5/2025	CHECKED - ELR	REVISED -	

STATE OF ILLINOIS
DEPARTMENT OF TRANSPORTATION

APPROACH SLAB DETAILS
STRUCTURE NO. 057-0163 AND 057-0164

SHEET 18 OF 32 SHEETS

F.A.I. RTE.	SECTION	COUNTY	TOTAL SHEETS	SHEET NO.
55	(57-3)BR	MCLEAN	126	99
		CONTRACT NO. 70F37		
	ILLINOIS	FED. AID PROJECT		

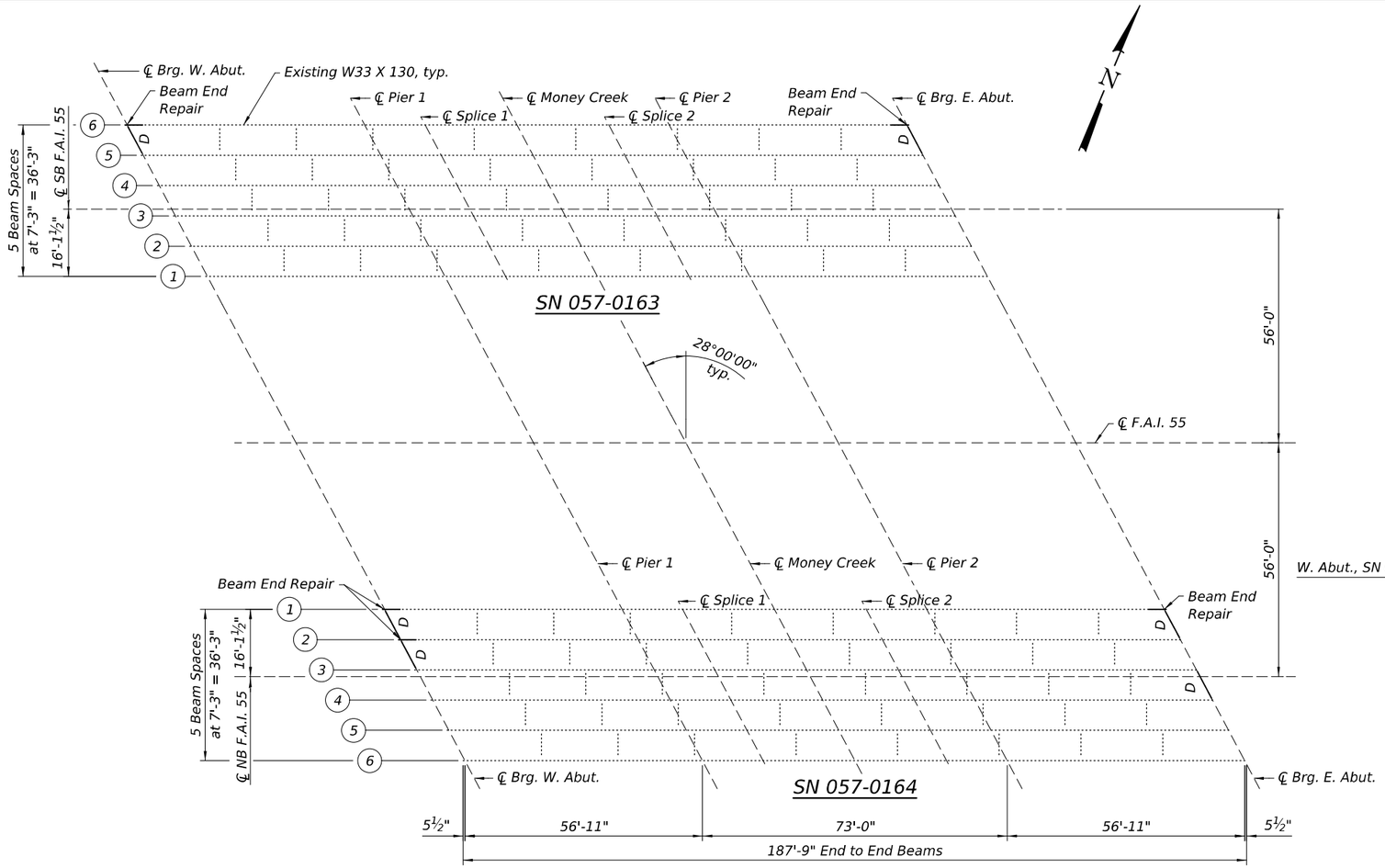

FRAMING PLAN

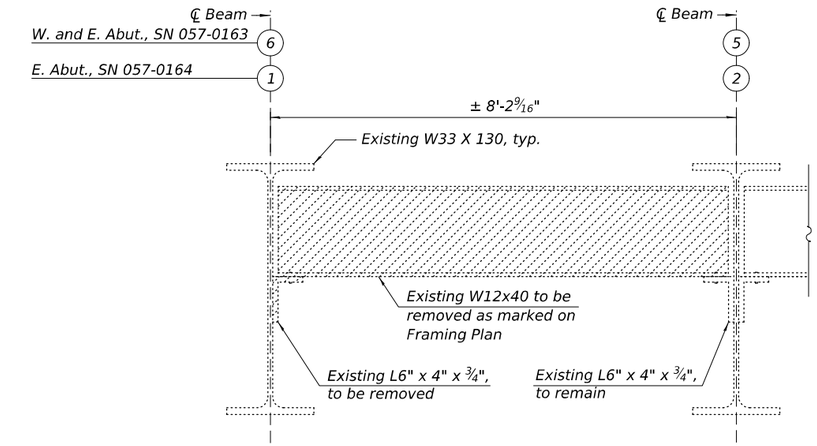

EXISTING END DIAPHRAGM REMOVAL, D

(S.N. 057-0163 and S.N. 057-0164 E. Abut., Looking East)

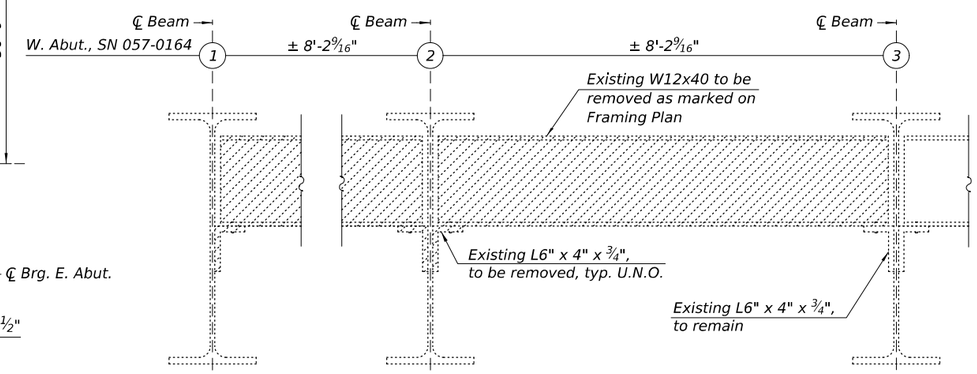

EXISTING END DIAPHRAGM REMOVAL, D

(S.N. 057-0164, Looking East)

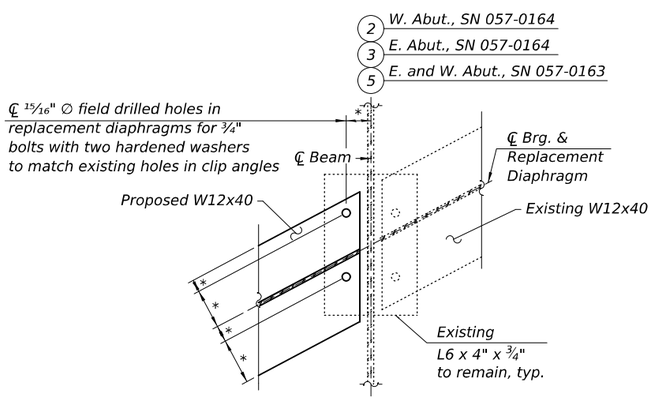

DETAIL A

* Contractor to field verify dimensions prior to ordering materials and repairing diaphragms.

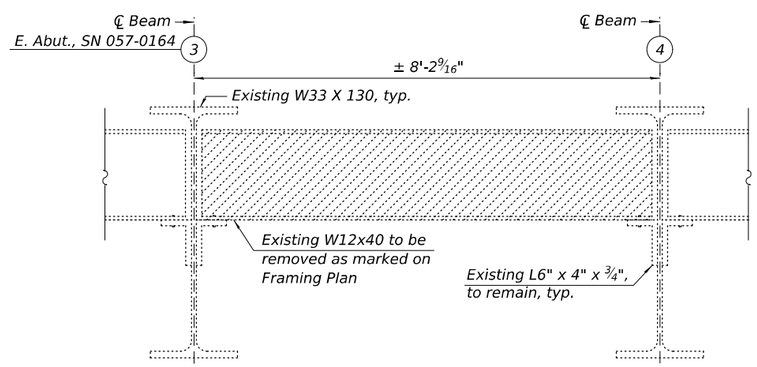

EXISTING END DIAPHRAGM REMOVAL, D

(S.N. 057-0164, Looking East)

Notes:

1. For existing details and dimensions not shown on this drawing see existing plans.
2. The existing clip angles shall be removed through mechanical means and all remaining weld material shall be ground flush with the existing web. Torch cutting of this clip angle is not allowed.
3. All grinding shall occur in the direction of the weld and not across it. The final ground surfaces shall be inspected for cracks using dye penetrant or magnetic particle testing after removal. Any cracks that are discovered shall be identified and reported to the Bureau of Bridges and Structures for further disposition. The cost of grinding and testing is included with Structural Steel Removal.
4. Ground surfaces shall be spot cleaned and painted with an aluminum epoxy mastic primer followed by a finish coat to match the color of the existing beam steel surface in accordance with the general notes. The cost of priming and painting is included with Structural Steel Repair and in accordance with the Special Provision "Cleaning and Painting Contact Surface Areas of Existing Steel Structures".

BILL OF MATERIALS

ITEM	UNIT	QUANTITY
STRUCTURAL STEEL REMOVAL	POUND	2,190

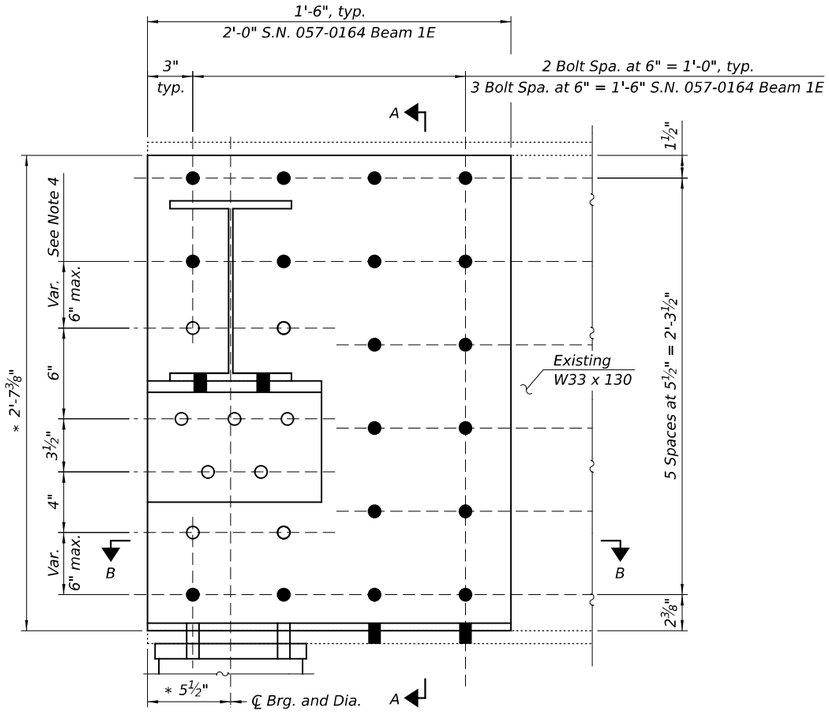

ELEVATION

(2'-0" long Bent Plate shown; 1'-6" Bent Plate similar)

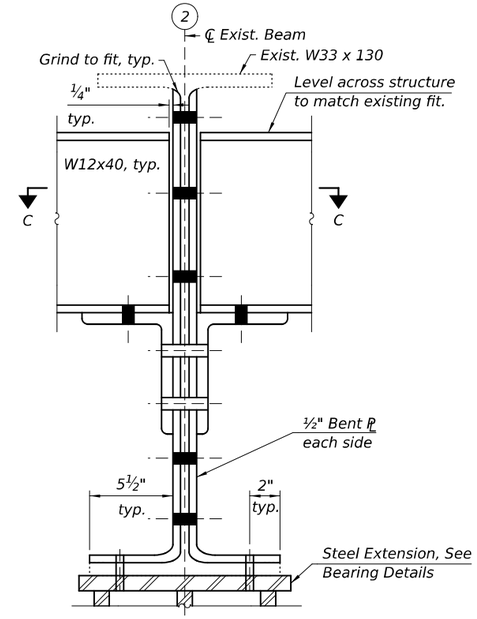

SECTION A-A

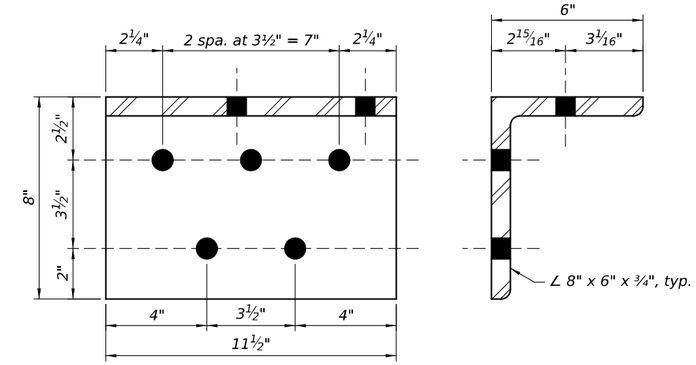

CLIP ANGLE DETAILS

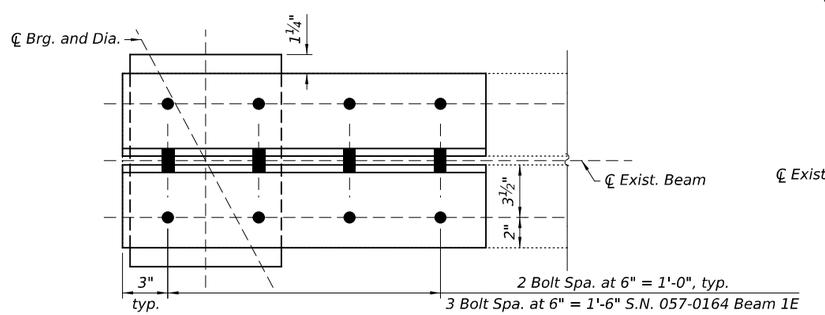

SECTION B-B

(2'-0" long Bent Plate shown; 1'-6" Bent Plate similar)

** Stop welds ¼" (±⅛") from edges as shown, typ.

(5 Locations)

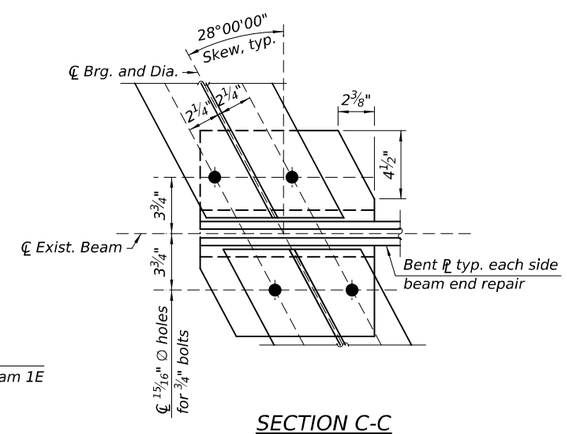

SECTION C-C

(See Detail A on sheet 19 of 32 for section at locations where the diaphragm replacement occurs while maintaining existing clip angle)

BOLT HOLE LEGEND

● - Shop Drilled Holes in New Steel

○ - Field Drilled Holes in New and Existing Steel using clip angle or bent plate shop drilled holes as a template, U.N.O.

Notes:

* 1. Prior to ordering any materials, the Contractor shall field verify all dimensions.

2. For dimensions not shown plans, see existing drawings.

3. Diaphragm connection holes shall be 15/16″ ∅ for 3/4″ bolts. Two hardened washers shall be required at diaphragm connections.

4. Location of field drilled holes in clip angle and bent plate will vary to meet diaphragm fit.

BILL OF MATERIALS

ITEM	UNIT	QUANTITY
STRUCTURAL STEEL REPAIR	POUND	1,370
FURNISHING AND ERECTING STRUCTURAL STEEL	POUND	2,270

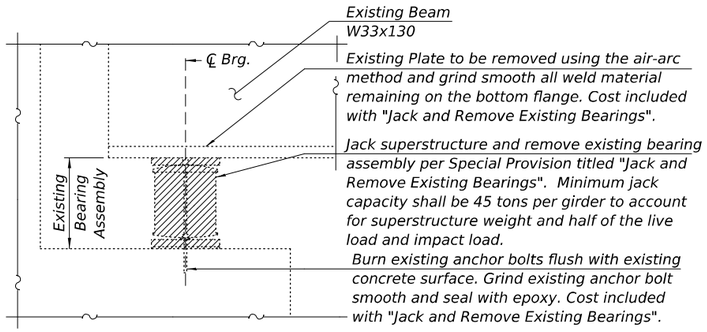

EXISTING BEARING REMOVAL DETAIL AT ABUTMENTS

(12 Total S.N. 057-0163, 12 Total S.N. 057-0164)

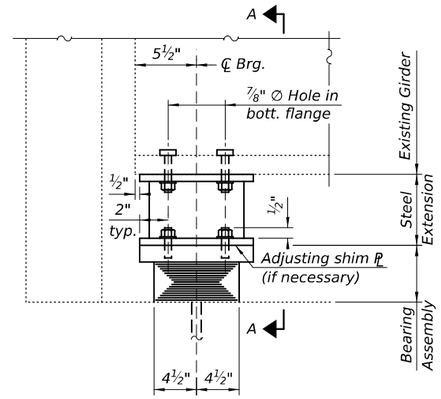

ELEVATION

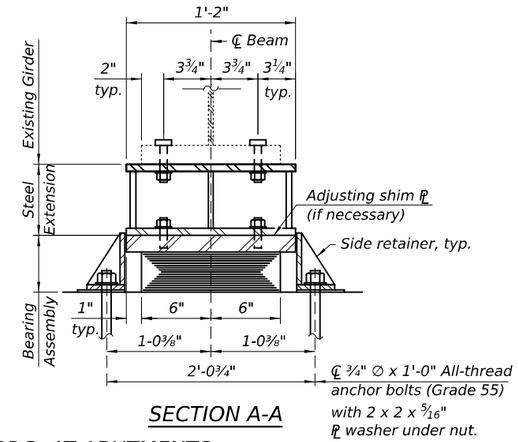

SECTION A-A

TYPE I ELASTOMERIC EXP. BRG. AT ABUTMENTS

(Drawn for beams that are not receiving beam end repair, for variance in extension connection to bottom flange at these locations see Sheet 20 of 32)

BEAM REACTIONS

INTERIOR GIRDER REACTION TABLE		
		Abutment
R_{DL}	(k)	27.4
R_{LL}	(k)	43.5
R_I	(k)	11.9
R_{Total}	(k)	82.8

STEEL EXTENSION ASSEMBLY HEIGHT, *h

S.N. 057-0163			S.N. 057-0164		
Beam	W. Abut.	E. Abut.	Beam	W. Abut.	E. Abut.
1	8 5/16"	9 1/4"	1	8 5/16"	9 1/4"
2	8 5/16"	9 1/4"	2	8 5/16"	9 1/4"
3	8 15/16"	9 1/4"	3	8 5/16"	9 1/4"
4	8 5/16"	9 1/4"	4	8 5/16"	9 1/4"
5	8 5/16"	9 1/4"	5	8 5/16"	9 1/4"
6	8 5/16"	9 1/4"	6	8 5/16"	9 1/4"

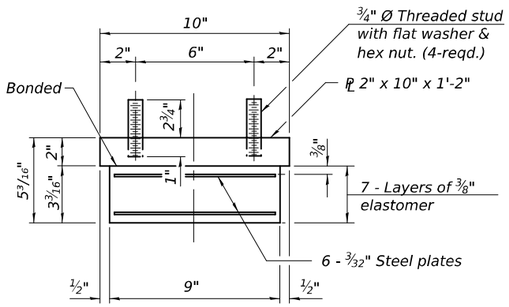

BEARING ASSEMBLY

(West Abutment)

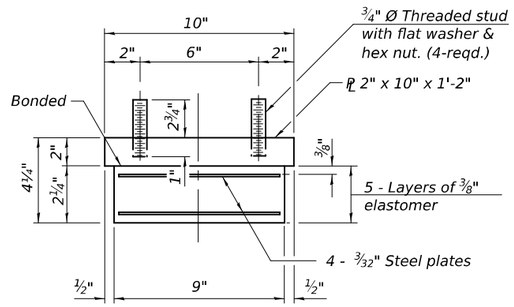

BEARING ASSEMBLY

(East Abutment)

Note:
Shim plates shall not be placed under bearing assembly.

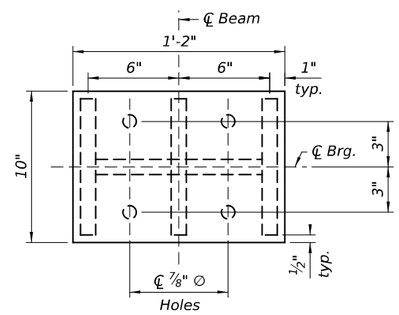

PLAN STEEL BEARING EXTENSION

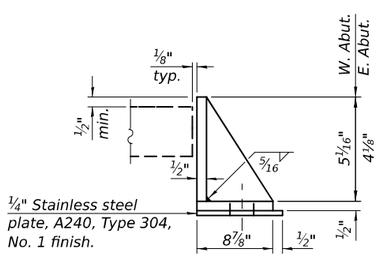

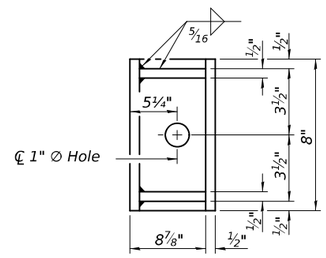

SIDE RETAINER

Equivalent rolled angle with stiffeners will be allowed in lieu of welded plates.

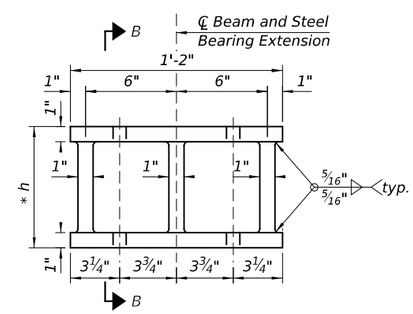

ELEVATION STEEL BEARING EXTENSION

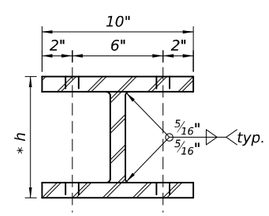

SECTION B-B

Notes:

* 1. Prior to ordering any material, the Contractor shall field verify all steel bearing extension heights.

2. Side retainers and stainless steel plates shall be included in the cost of Elastomeric Bearing Assembly, Type I.

3. The structural steel plates of the Bearing Assembly shall conform to the requirements of AASHTO M270 Grade 50.

4. Two ⅛" adjusting shims shall be provided for each bearing in addition to all other plates or shims and placed as shown on bearing details.

5. The cost of steel extensions and all connection bolts are included with the cost of Furnishing and Erecting Structural Steel.

6. If the analysis submitted by the Contractor for the jacking system to be used shows temporary stiffeners are required to prevent web crippling or buckling, the stiffeners shall be steel and bolted to the web. If stiffeners are not required, hardwood timbers shall be installed tightly between the top and bottom flange to prevent flange rotation.

7. Diaphragms shall not be used as load carrying members during beam jacking.

BILL OF MATERIAL

ITEM	UNIT	QUANTITY
FURNISHING AND ERECTING STRUCTURAL STEEL	POUND	3,810
ELASTOMERIC BEARING ASSEMBLY, TYPE I	EACH	24
ANCHOR BOLTS, 3/4"	EACH	48
JACK AND REMOVE EXISTING BEARINGS	EACH	24

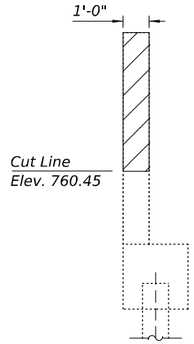

SECTION B-B

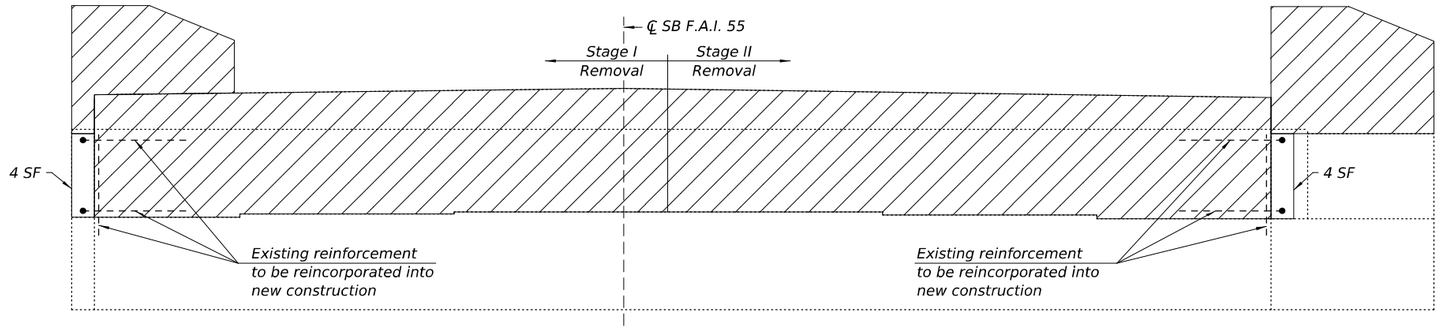

WEST ABUTMENT ELEVATION

(Looking West)

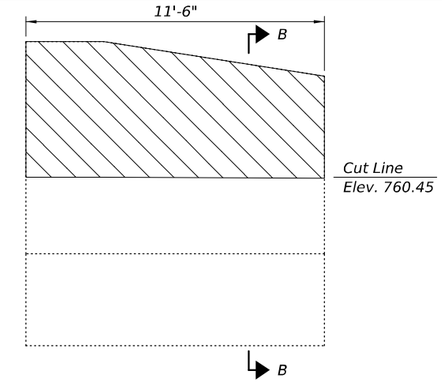

WINGWALL ELEVATION

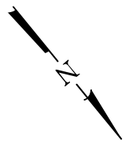

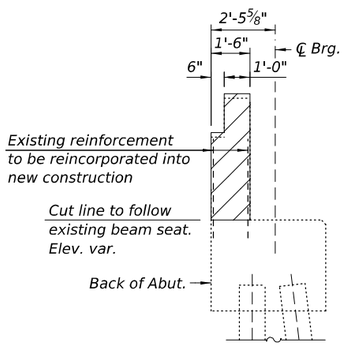

SECTION A-A

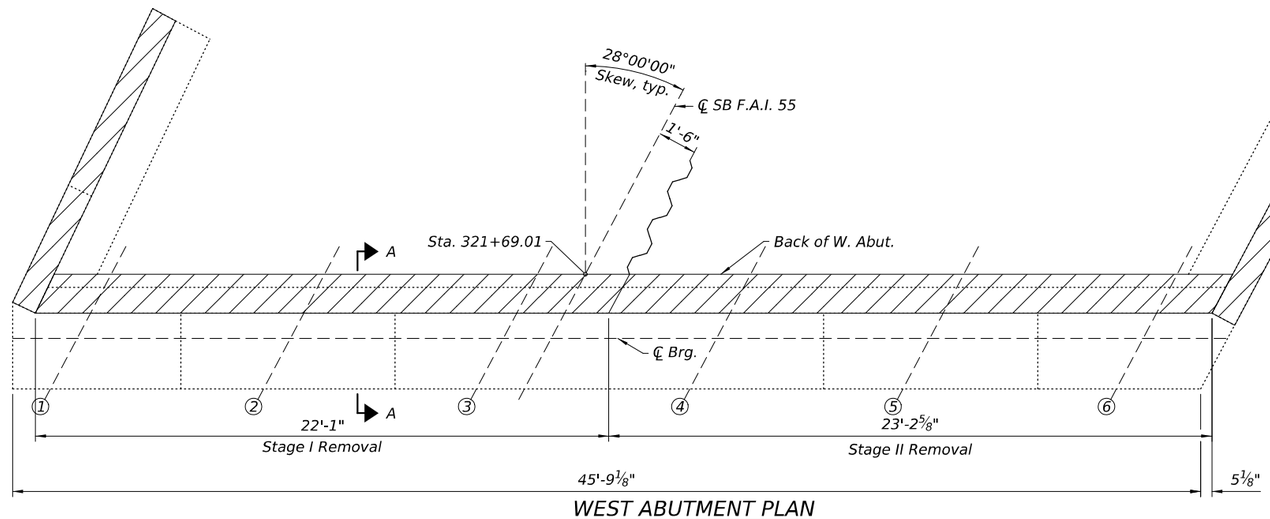

WEST ABUTMENT PLAN

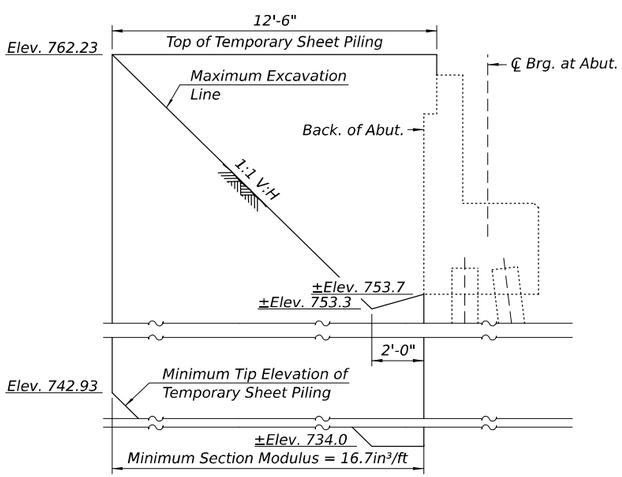

TEMPORARY SHEET PILING

(Section along Stage Construction Line)

Excavation slope and 2'-0" dim. at Rt. ∠'s to Bk. of Abut.

LEGEND

Concrete Removal

Structural Repair of Concrete (Depth Equal to or Less Than 5 Inches)

BILL OF MATERIALS

ITEM	UNIT	QUANTITY
CONCRETE REMOVAL	CU YD	15.7
TEMPORARY SHEET PILING	SQ FT	309
STRUCTURAL REPAIR OF CONCRETE (DEPTH EQUAL TO OR LESS THAN 5 INCHES)	SQ FT	8
CLEANING BRIDGE SEATS	SQ FT	138

Notes:

1. The elevations and dimensions shown are calculated based off existing plans and field measurements. The Contractor shall verify in field and make necessary approved adjustments prior to removals or ordering of materials. For additional information, see select Existing Drawings.
2. Existing vertical reinforcement in back wall and horizontal reinforcement from wingwalls shall be cleaned and incorporated into new construction. Cost included in the cost of "Concrete Removal".
3. Any existing reinforcement bars to be incorporated into new construction that are damaged during concrete removal operations shall be repaired or replaced using an approved bar splicer or anchorage system. Cost included in the cost of "Concrete Removal".
4. If the Contractor chooses to alter the temporary cantilevered sheet piling design requirements shown on the plans, a design submittal including plan details and calculations will be required for review and acceptance by the Engineer.

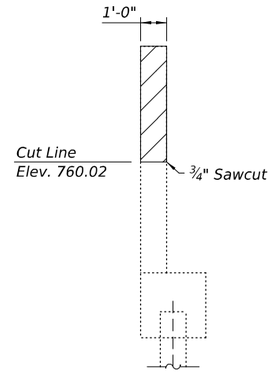

SECTION B-B

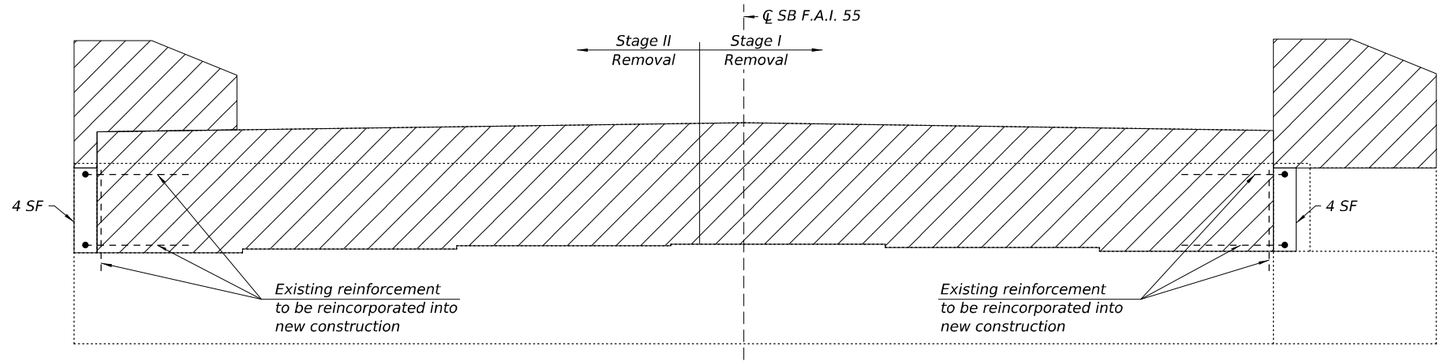

EAST ABUTMENT ELEVATION

(Looking East)

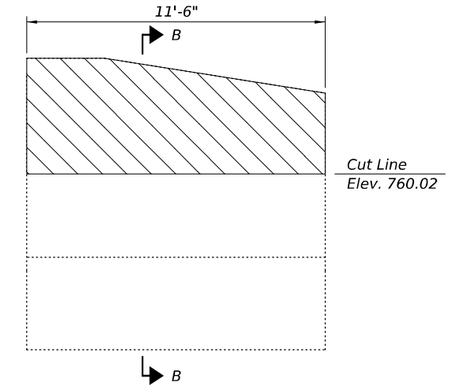

WINGWALL ELEVATION

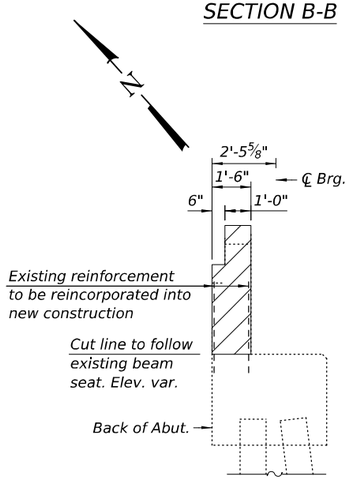

SECTION A-A

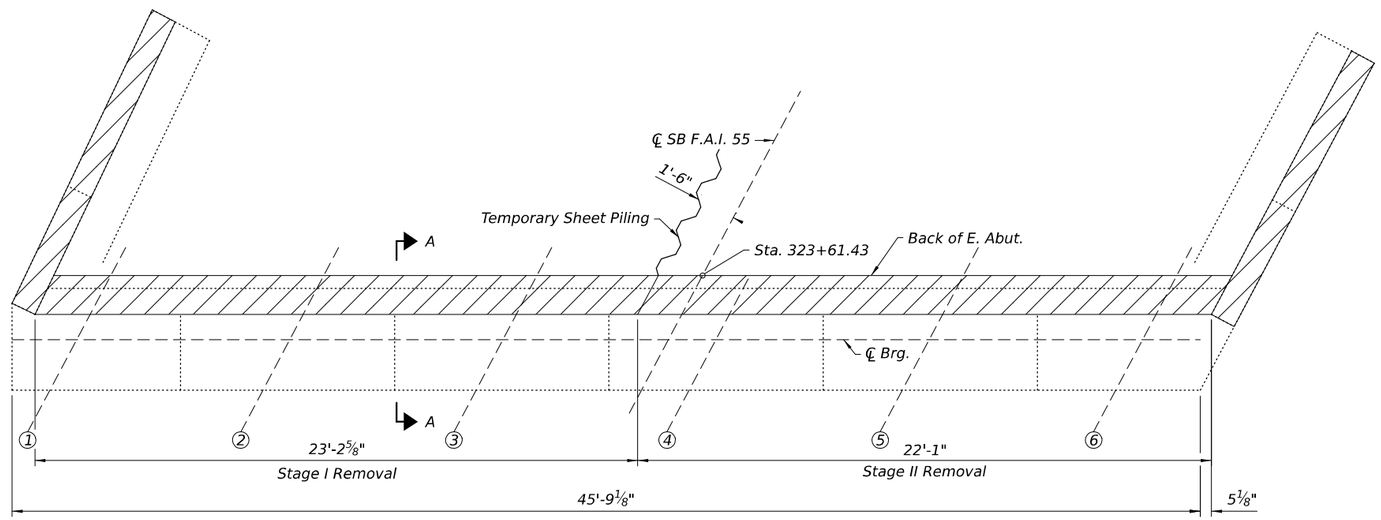

EAST ABUTMENT PLAN

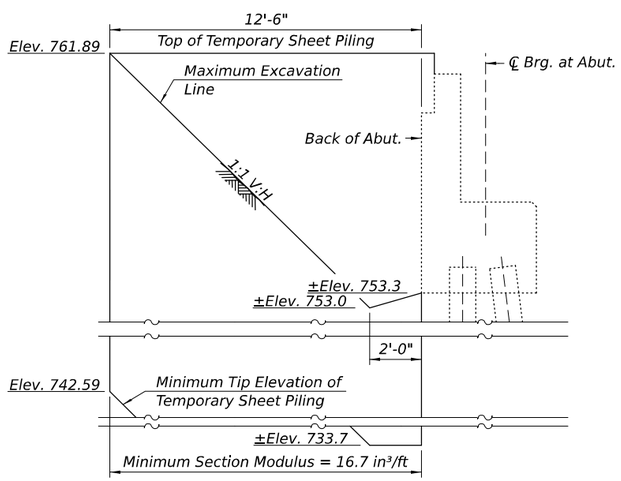

TEMPORARY SHEET PILING

(Section along Stage Construction Line)

Excavation slope and 2'-0" dim. at Rt. ∠'s to Bk. of Abut.)

LEGEND

Concrete Removal

Structural Repair of Concrete (Depth Equal to or Less Than 5 Inches)

BILL OF MATERIALS

ITEM	UNIT	QUANTITY
CONCRETE REMOVAL	CU YD	15.6
TEMPORARY SHEET PILING	SQ FT	309
STRUCTURAL REPAIR OF CONCRETE (DEPTH EQUAL TO OR LESS THAN 5 INCHES)	SQ FT	8
CLEANING BRIDGE SEATS	SQ FT	138

Notes:

1. The elevations and dimensions shown are calculated based off existing plans and field measurements. The Contractor shall verify in field and make necessary approved adjustments prior to removals or ordering of materials. For additional information, see select Existing Drawings.
2. Existing vertical reinforcement in back wall and horizontal reinforcement from wingwalls shall be cleaned and incorporated into new construction. Cost included in the cost of "Concrete Removal".
3. Any existing reinforcement bars to be incorporated into new construction that are damaged during concrete removal operations shall be repaired or replaced using an approved bar splicer or anchorage system. Cost included in the cost of "Concrete Removal".
4. If the Contractor chooses to alter the temporary cantilevered sheet piling design requirements shown on the plans, a design submittal including plan details and calculations will be required for review and acceptance by the Engineer.

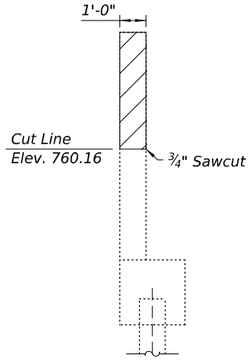

SECTION B-B

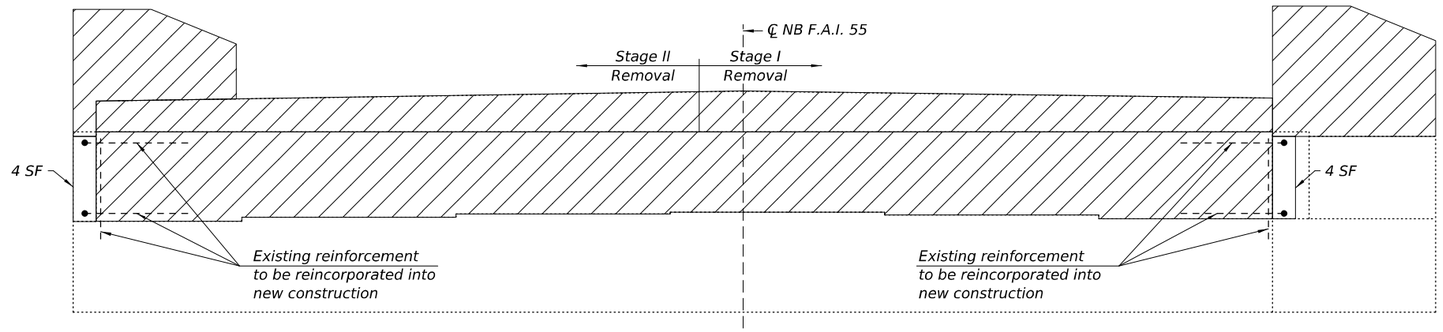

WEST ABUTMENT ELEVATION

(Looking West)

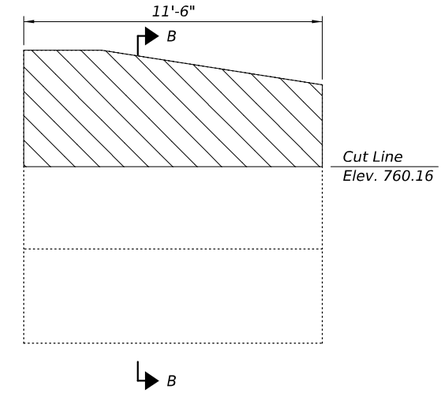

WINGWALL ELEVATION

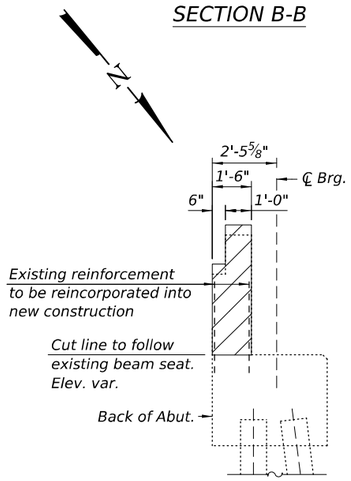

SECTION A-A

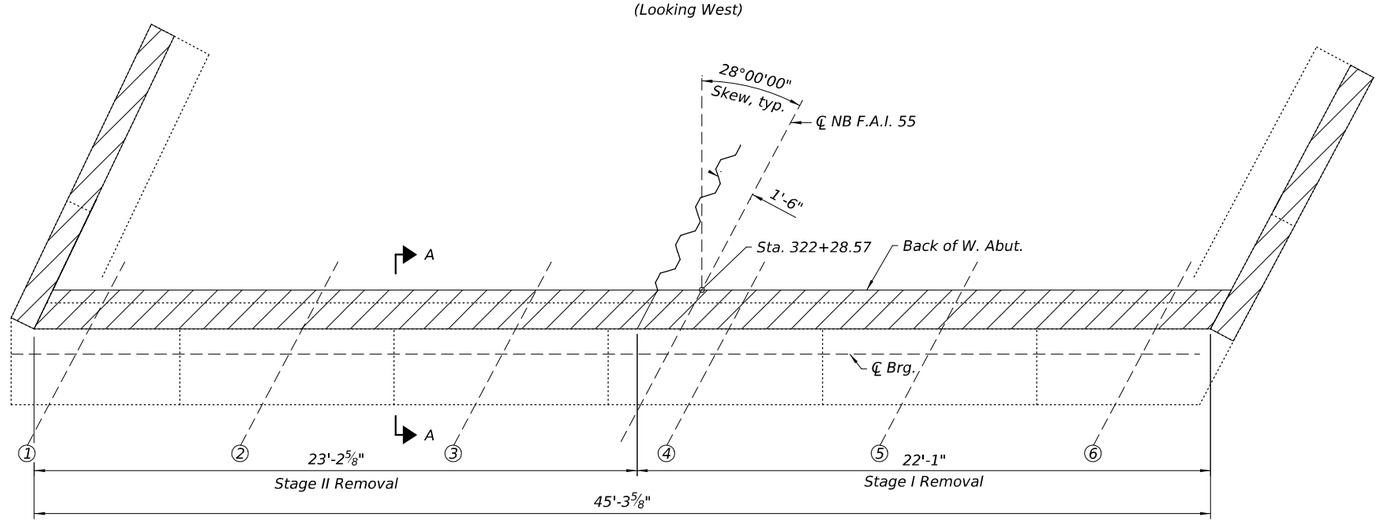

WEST ABUTMENT PLAN

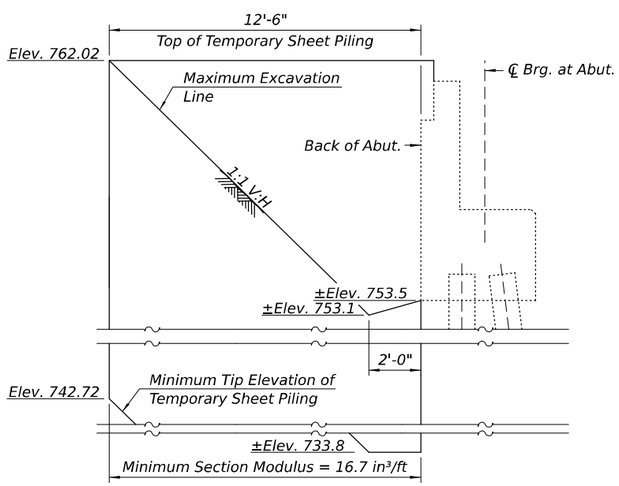

TEMPORARY SHEET PILING

(Section along Stage Construction Line)

Excavation slope and 2'-0" dim. at Rt. ∠'s to Bk. of Abut.)

LEGEND

Concrete Removal

Structural Repair of Concrete (Depth Equal to or Less Than 5 Inches)

BILL OF MATERIALS

ITEM	UNIT	QUANTITY
CONCRETE REMOVAL	CU YD	15.5
TEMPORARY SHEET PILING	SQ FT	309
STRUCTURAL REPAIR OF CONCRETE (DEPTH EQUAL TO OR LESS THAN 5 INCHES)	SQ FT	8
CLEANING BRIDGE SEATS	SQ FT	138

Notes:

1. The elevations and dimensions shown are calculated based off existing plans and field measurements. The Contractor shall verify in field and make necessary approved adjustments prior to removals or ordering of materials. For additional information, see select Existing Drawings.
2. Existing vertical reinforcement in back wall and horizontal reinforcement from wingwalls shall be cleaned and incorporated into new construction. Cost included in the cost of "Concrete Removal".
3. Any existing reinforcement bars to be incorporated into new construction that are damaged during concrete removal operations shall be repaired or replaced using an approved bar splicer or anchorage system. Cost included in the cost of "Concrete Removal".
4. If the Contractor chooses to alter the temporary cantilevered sheet piling design requirements shown on the plans, a design submittal including plan details and calculations will be required for review and acceptance by the Engineer.

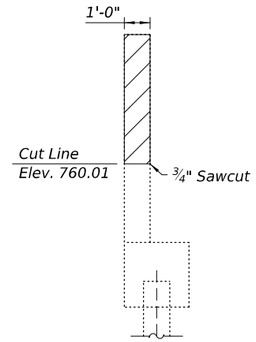

SECTION B-B

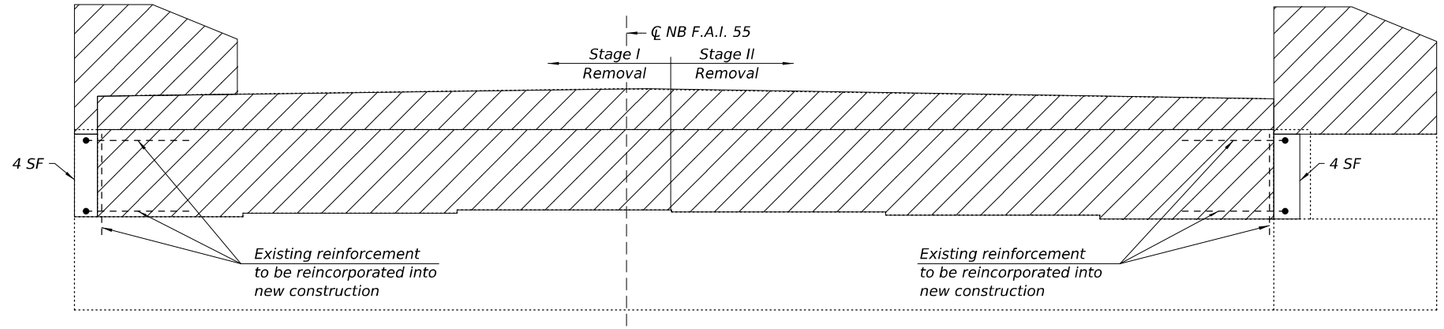

EAST ABUTMENT ELEVATION

(Looking East)

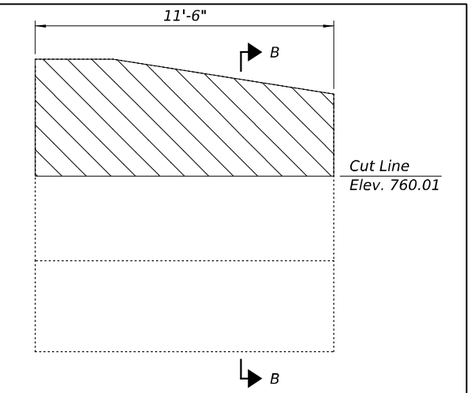

WINGWALL ELEVATION

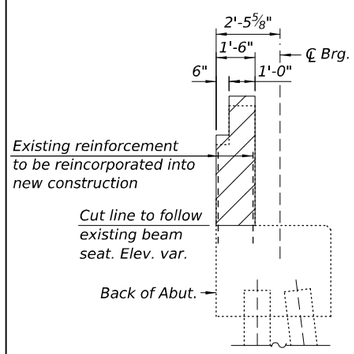

SECTION A-A

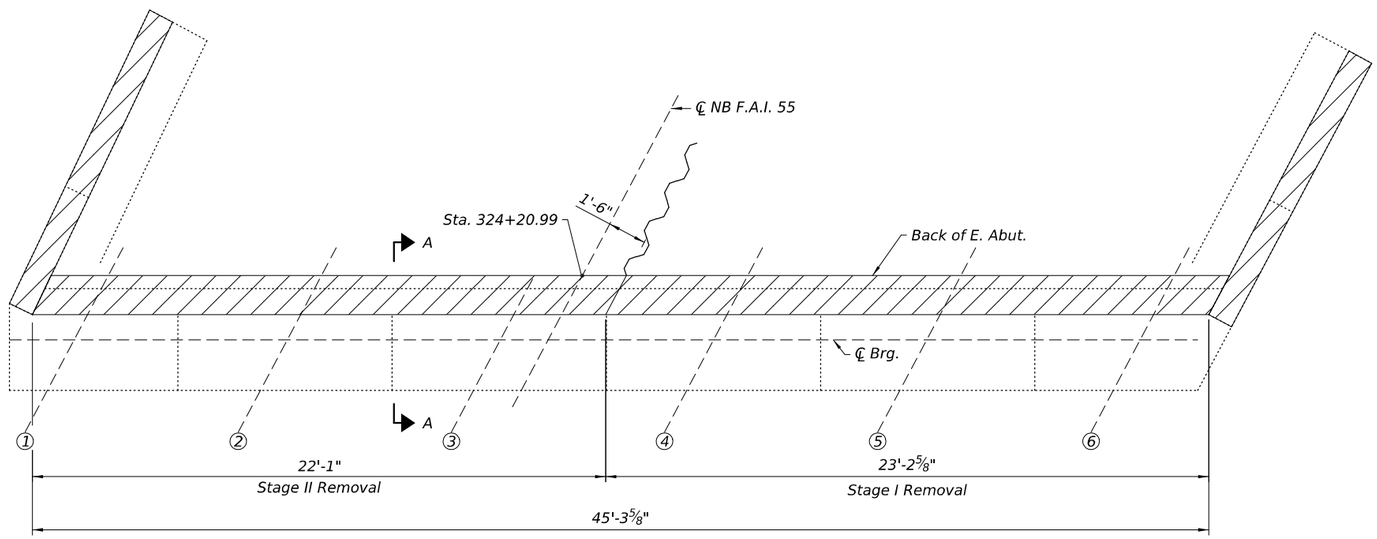

EAST ABUTMENT PLAN

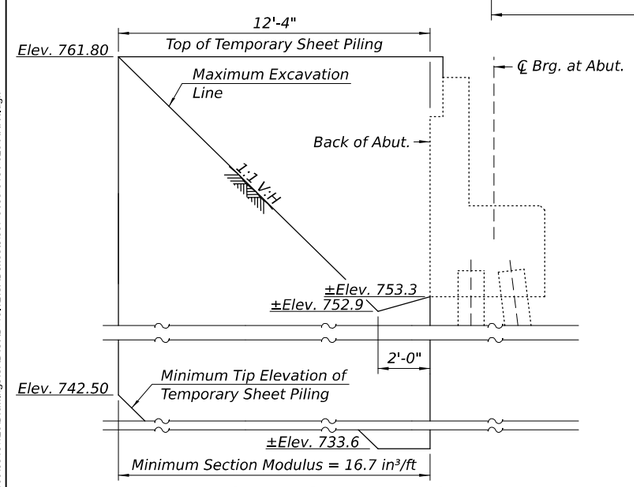

TEMPORARY SHEET PILING

(Section along Stage Construction Line)

Excavation slope and 2'-0" dim. at Rt. ∠'s to Bk. of Abut.)

LEGEND

Concrete Removal

Structural Repair of Concrete (Depth Equal to or Less Than 5 Inches)

BILL OF MATERIALS

ITEM	UNIT	QUANTITY
CONCRETE REMOVAL	CU YD	15.6
TEMPORARY SHEET PILING	SQ FT	309
STRUCTURAL REPAIR OF CONCRETE (DEPTH EQUAL TO OR LESS THAN 5 INCHES)	SQ FT	8
CLEANING BRIDGE SEATS	SQ FT	138

Notes:

1. The elevations and dimensions shown are calculated based off existing plans and field measurements. The Contractor shall verify in field and make necessary approved adjustments prior to removals or ordering of materials. For additional information, see select Existing Drawings.
2. Existing vertical reinforcement in back wall and horizontal reinforcement from wingwalls shall be cleaned and incorporated into new construction. Cost included in the cost of "Concrete Removal".
3. Any existing reinforcement bars to be incorporated into new construction that are damaged during concrete removal operations shall be repaired or replaced using an approved bar splicer or anchorage system. Cost included in the cost of "Concrete Removal".
4. If the Contractor chooses to alter the temporary cantilevered sheet piling design requirements shown on the plans, a design submittal including plan details and calculations will be required for review and acceptance by the Engineer.

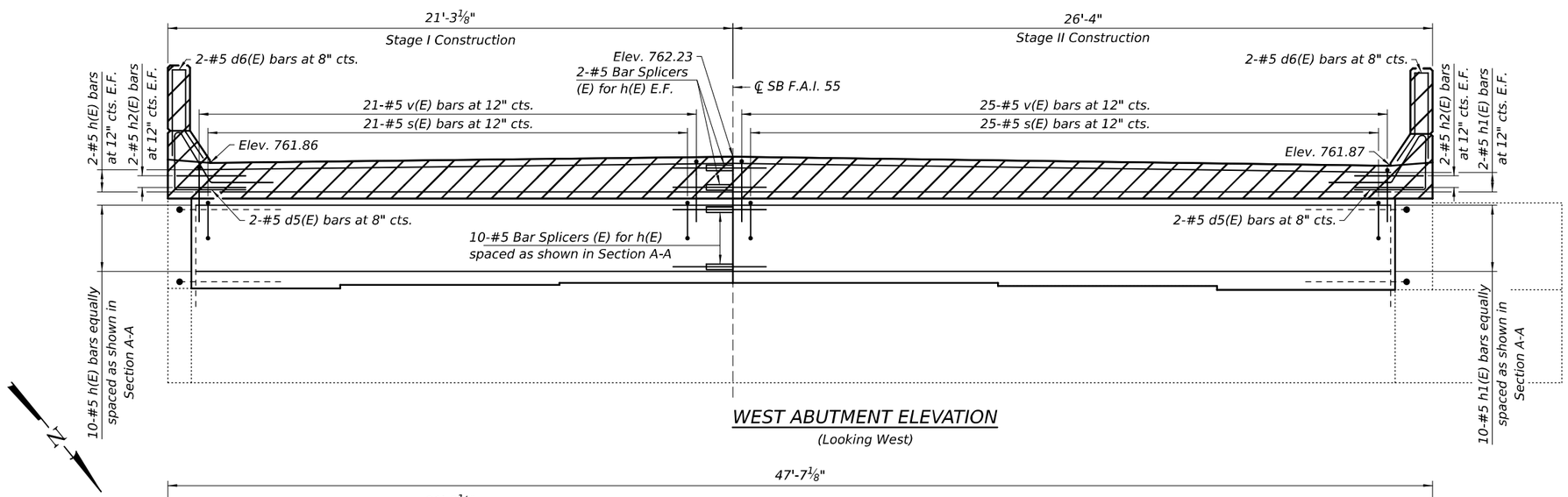

WEST ABUTMENT ELEVATION

(Looking West)

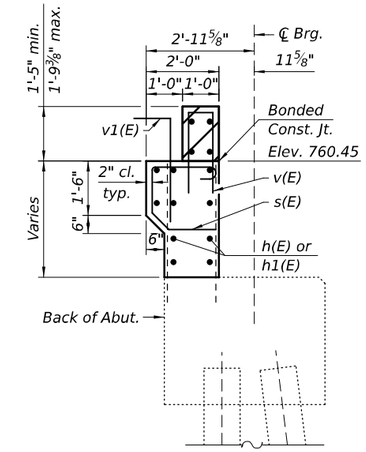

SECTION A-A

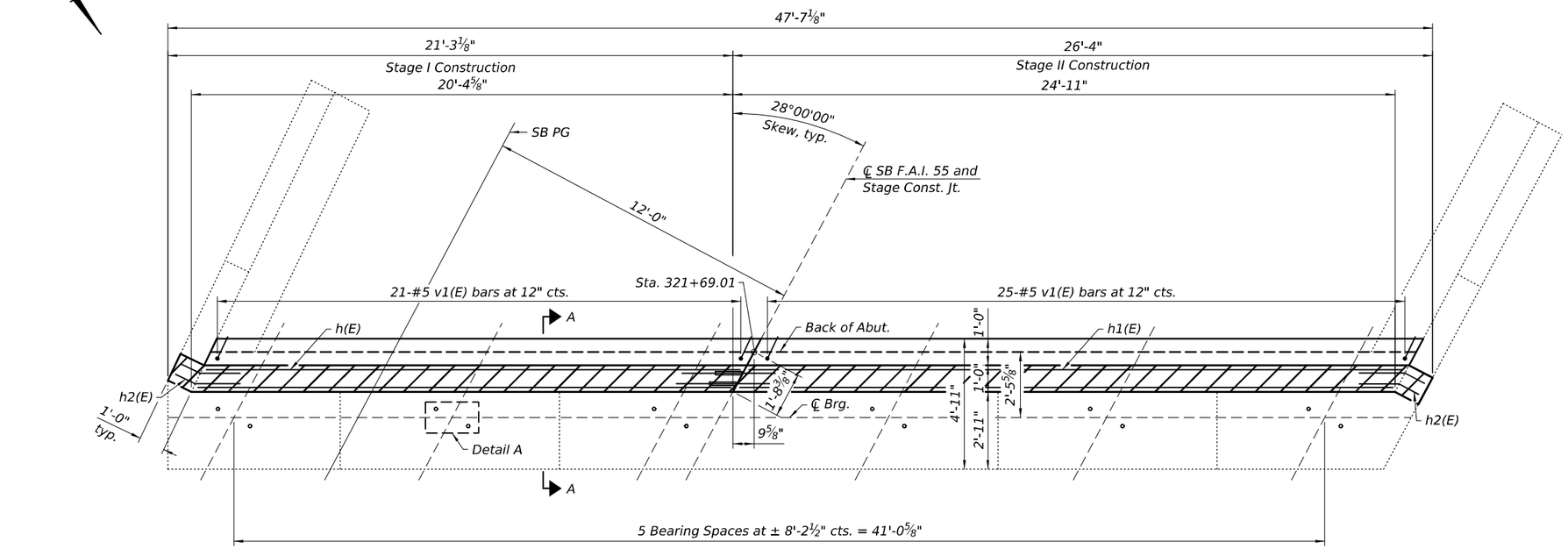

WEST ABUTMENT PLAN

LEGEND

Concrete Superstructure

MINIMUM BAR LAP

#5 Bar = 2'-1"

BILL OF MATERIALS

Bar	No.	Size	Length	Shape
d5(E)	4	#5	7'-9"	
d6(E)	4	#5	7'-5"	
h(E)	14	#5	20'-1"	
h1(E)	14	#5	24'-7"	
h2(E)	8	#5	3'-10"	
s(E)	46	#5	5'-3"	
v(E)	46	#5	7'-0"	
v1(E)	46	#5	4'-0"	
CONCRETE STRUCTURES			CU YD	10.6
CONCRETE SUPERSTRUCTURE			CU YD	3.1
REINFORCEMENT BARS, EPOXY COATED			POUND	1,530
BAR SPLICERS			EACH	14

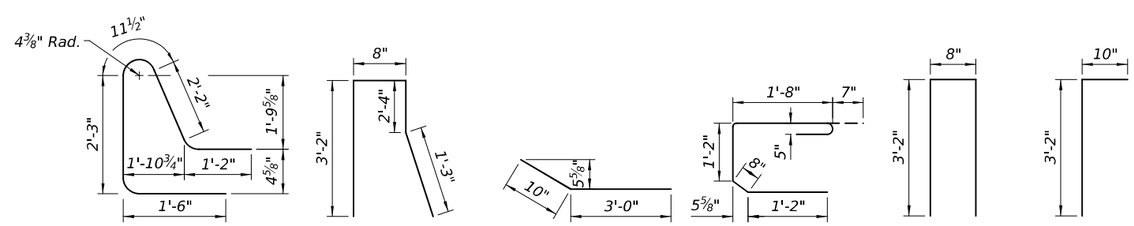

BAR d5(E) BAR d6(E) BAR h2(E) BAR s(E) BAR v(E) BAR v1(E)

Notes:
1. For anchor bolt layout, see sheet 29 of 32.
2. See sheet 18 of 32 for horizontal reinforcement in closure pour parapet.

MODEL: Default
FILE NAME: S:\JOL\6300--839916346\125\Drawings\CAD\ORD-10.12\CADsheets\057-0163-01164-02\5-APE1.dgn

STRAND ASSOCIATES
1170 SOUTH HOUBOLT ROAD
JOLIET, ILLINOIS 60431
(815) 744-4200
IDFPR NO. 184-001273

USER NAME = CodyH	DESIGNED - ELR	REVISED -	
	CHECKED - NDR	REVISED -	
PLOT SCALE = 0:2.0000 ':" / in.	DRAWN - CJH	REVISED -	
PLOT DATE = 12/5/2025	CHECKED - ELR	REVISED -	

STATE OF ILLINOIS
DEPARTMENT OF TRANSPORTATION

ABUTMENT PLAN AND ELEVATION (1 OF 4)
STRUCTURE NO. 057-0163 (SB)

SHEET 26 OF 32 SHEETS

F.A.I. RTE.	SECTION	COUNTY	TOTAL SHEETS	SHEET NO.
55	(57-3)BR	MCLEAN	126	107
		CONTRACT NO. 70F37		
	ILLINOIS	FED. AID PROJECT		

12/5/2025 1:41:38 PM

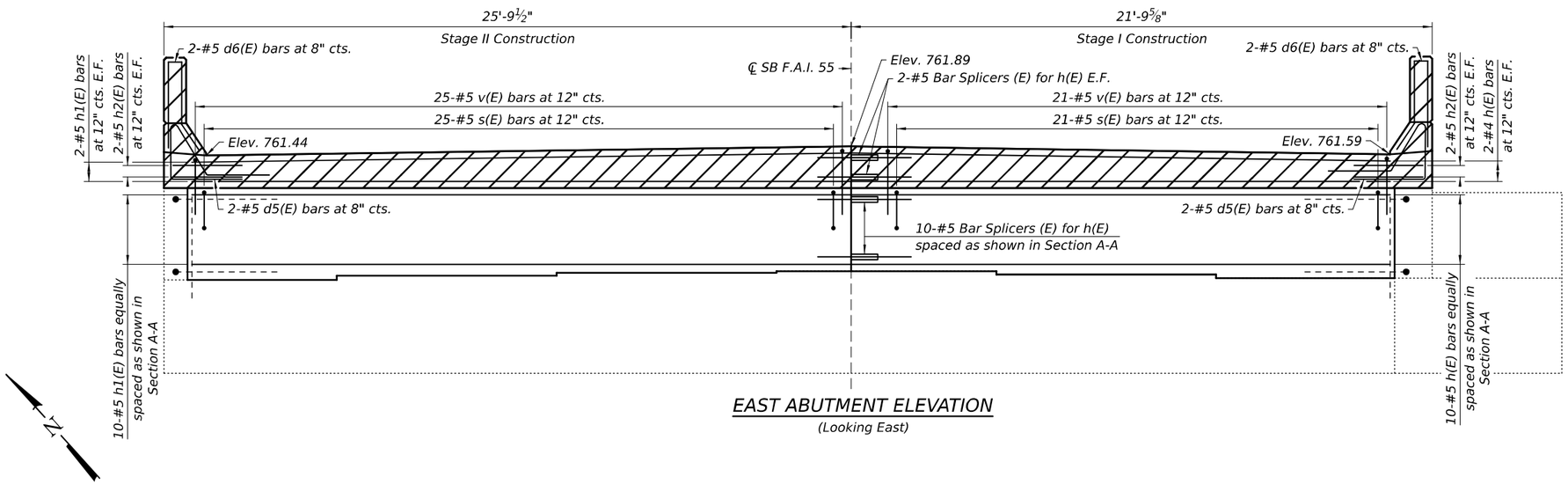

EAST ABUTMENT ELEVATION

(Looking East)

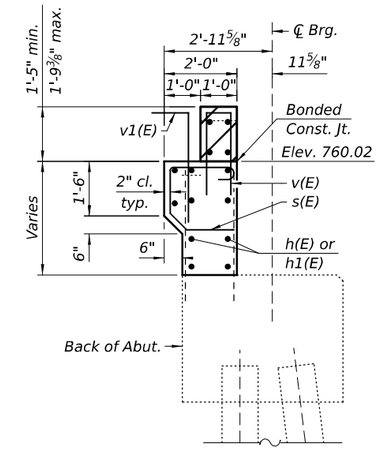

SECTION A-A

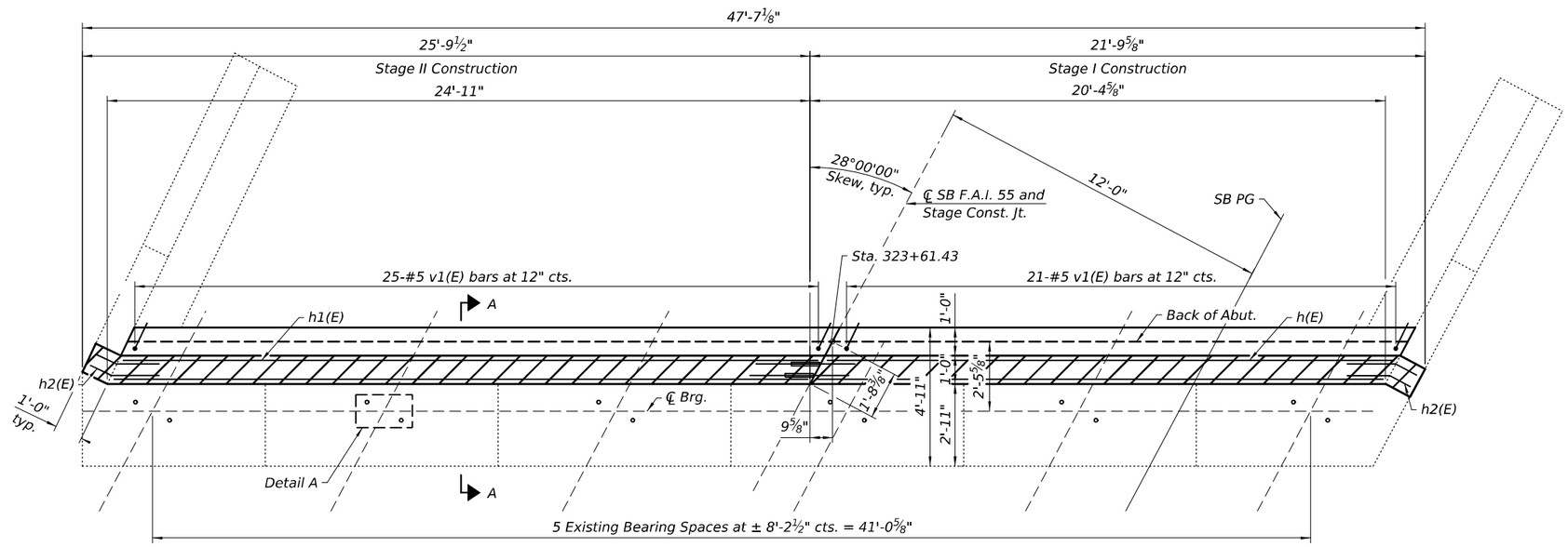

EAST ABUTMENT PLAN

LEGEND

Concrete Superstructure

MINIMUM BAR LAP

#5 Bar = 2'-1"

BILL OF MATERIALS

Bar	No.	Size	Length	Shape
d5(E)	4	#5	7'-9"	
d6(E)	4	#5	7'-5"	
h(E)	14	#5	20'-1"	
h1(E)	14	#5	24'-7"	
h2(E)	8	#5	3'-10"	
s(E)	46	#5	5'-3"	
v(E)	46	#5	7'-0"	
v1(E)	46	#5	4'-0"	
CONCRETE STRUCTURES			CU YD	10.4
CONCRETE SUPERSTRUCTURE			CU YD	3.3
REINFORCEMENT BARS, EPOXY COATED			POUND	1,530
BAR SPLICERS			EACH	14

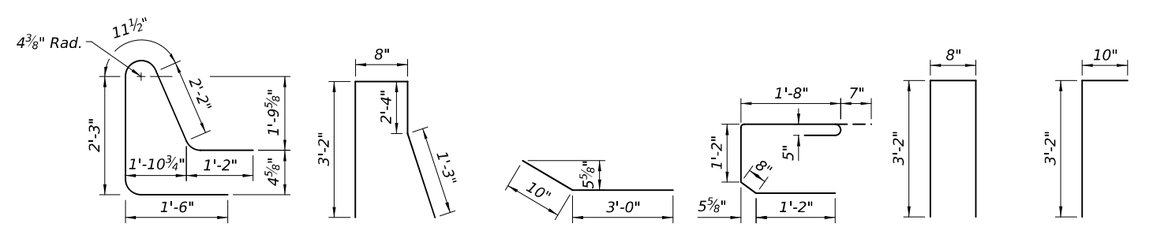

BAR d5(E) BAR d6(E) BAR h2(E) BAR s(E) BAR v(E) BAR v1(E)

Notes:

1. For anchor bolt layout, see sheet 29 of 32.
2. See sheet 18 of 32 for horizontal reinforcement in closure pour parapet.

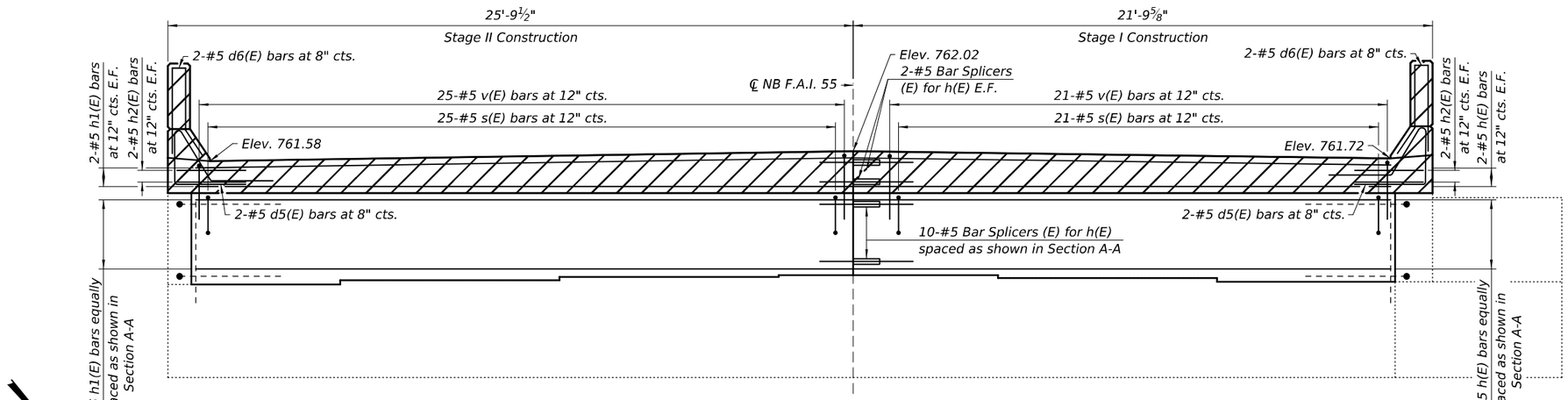

WEST ABUTMENT ELEVATION

(Looking West)

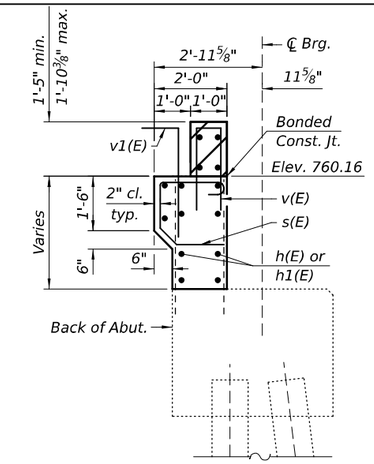

SECTION A-A

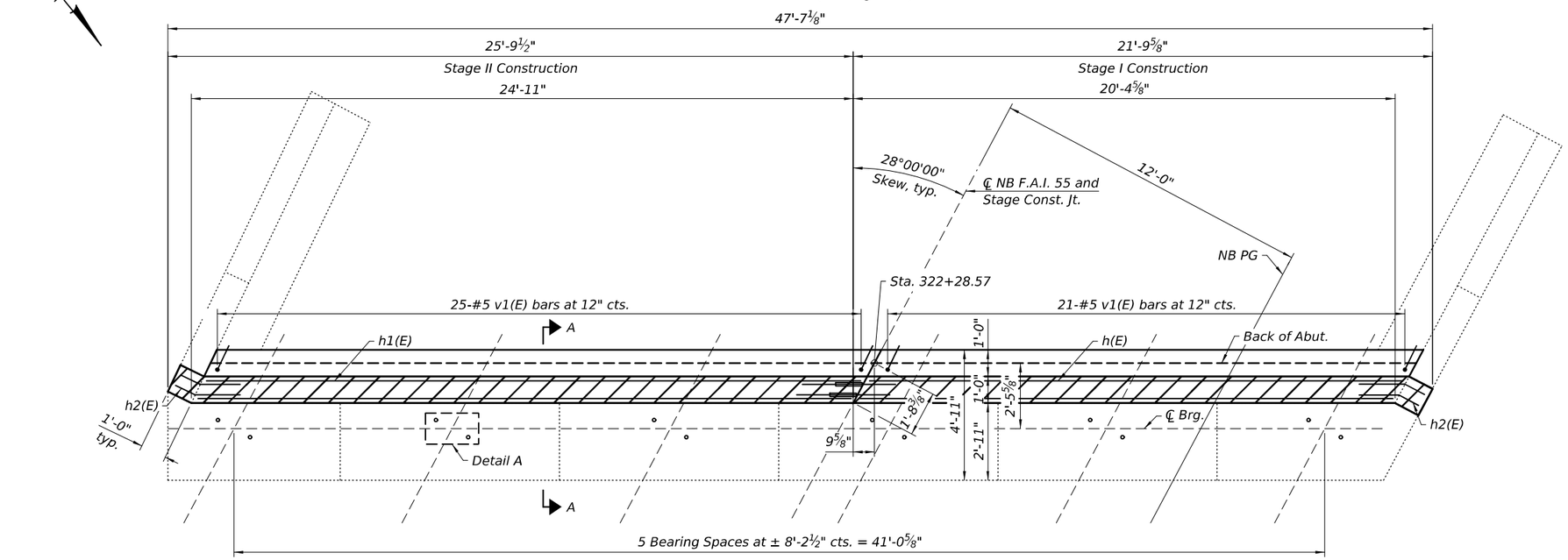

WEST ABUTMENT PLAN

LEGEND

Concrete Superstructure

MINIMUM BAR LAP

#5 Bar = 2'-1"

BILL OF MATERIALS

Bar	No.	Size	Length	Shape
d5(E)	4	#5	7'-9"	
d6(E)	4	#5	7'-5"	
h(E)	14	#5	20'-1"	
h1(E)	14	#5	24'-7"	
h2(E)	8	#5	3'-10"	
s(E)	46	#5	5'-3"	
v(E)	46	#5	7'-0"	
v1(E)	46	#5	4'-0"	
CONCRETE STRUCTURES			CU YD	10.4
CONCRETE SUPERSTRUCTURE			CU YD	2.9
REINFORCEMENT BARS, EPOXY COATED			POUND	1,530
BAR SPLICERS			EACH	14

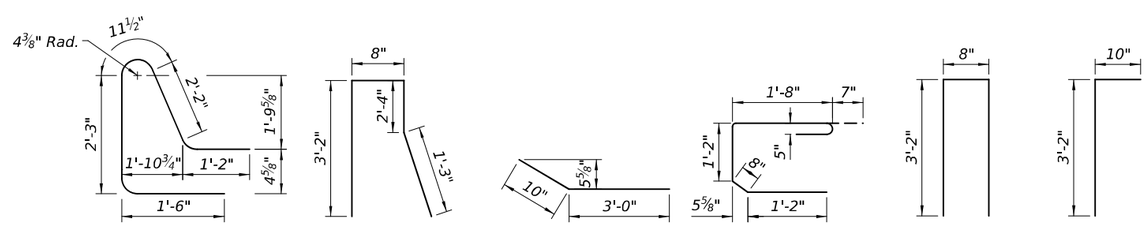

BAR d5(E) BAR d6(E) BAR h2(E) BAR s(E) BAR v(E) BAR v1(E)

Notes:
1. For anchor bolt layout, see sheet 29 of 32.
2. See sheet 18 of 32 for horizontal reinforcement in closure pour parapet.

MODEL: Default
FILE NAME: S:\JOL\6300-6399\6346\129\Drawings\CAD\ORD-10_12\CADsheets\057-0163-0164-028-APE3.dgn

STRAND ASSOCIATES
1170 SOUTH HOUBOLT ROAD
JOLIET, ILLINOIS 60431
(815) 744-4200
IDFPR NO. 184-001273

USER NAME = CodyH	DESIGNED - ELR	REVISED -	
	CHECKED - NDR	REVISED -	
PLOT SCALE = 0:2.0000 ':" / in.	DRAWN - CJH	REVISED -	
PLOT DATE = 12/5/2025	CHECKED - ELR	REVISED -	

STATE OF ILLINOIS
DEPARTMENT OF TRANSPORTATION

ABUTMENT PLAN AND ELEVATION (3 OF 4)
STRUCTURE NO. 057-0164 (NB)

SHEET 28 OF 32 SHEETS

F.A.I. RTE.	SECTION	COUNTY	TOTAL SHEETS	SHEET NO.
55	(57-3)BR	MCLEAN	126	109
		CONTRACT NO. 70F37		
		ILLINOIS	FED. AID PROJECT	

12/5/2025 1:42:36 PM

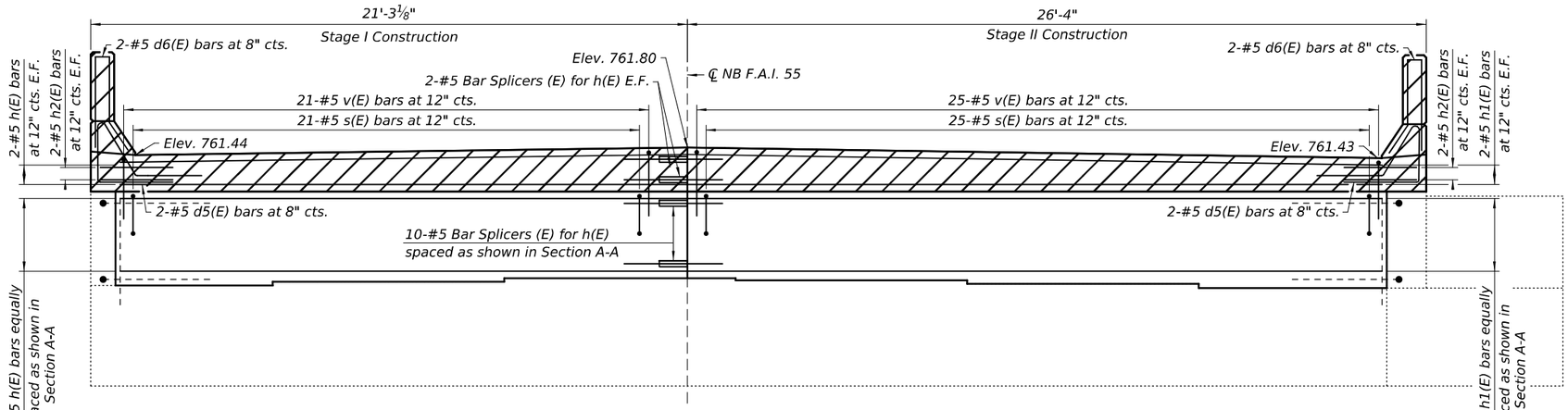

EAST ABUTMENT ELEVATION

(Looking East)

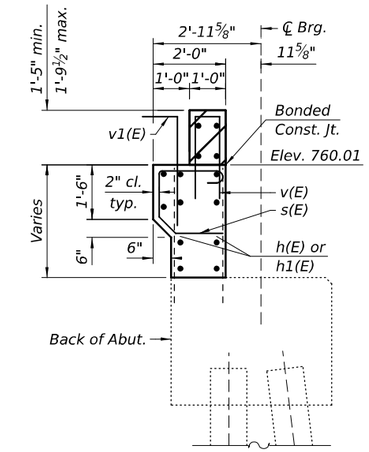

SECTION A-A

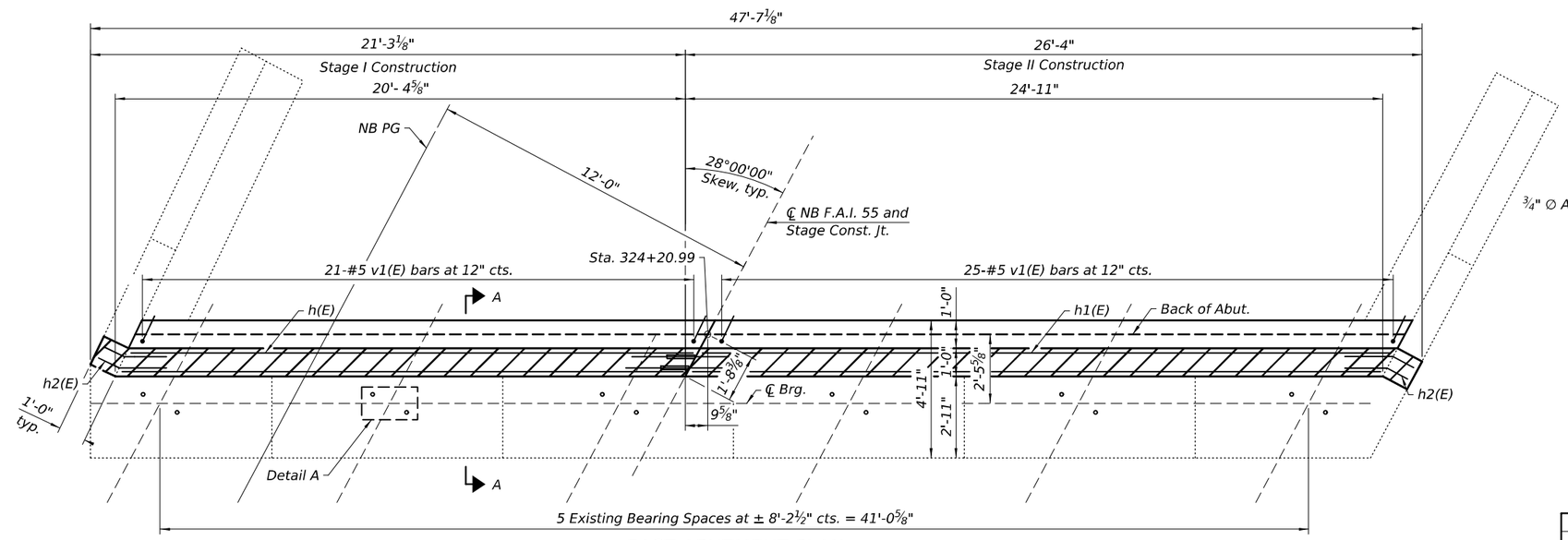

EAST ABUTMENT PLAN

LEGEND

Concrete Superstructure

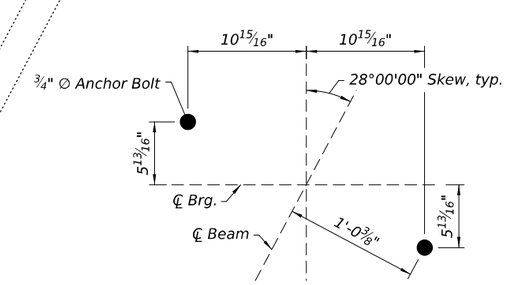

ANCHOR BOLT LOCATION PLAN
DETAIL A

BILL OF MATERIALS

Bar	No.	Size	Length	Shape
d5(E)	4	#5	7'-9"	
d6(E)	4	#5	7'-5"	
h(E)	14	#5	20'-1"	
h1(E)	14	#5	24'-7"	
h2(E)	8	#5	3'-10"	
s(E)	46	#5	5'-3"	
v(E)	46	#5	7'-0"	
v1(E)	46	#5	4'-0"	
CONCRETE STRUCTURES			CU YD	10.6
CONCRETE SUPERSTRUCTURE			CU YD	2.8
REINFORCEMENT BARS, EPOXY COATED			POUND	1,530
BAR SPLICERS			EACH	14

Notes:

1. For sheet 18 of 32 for horizontal reinforcement in closure pour parapet.

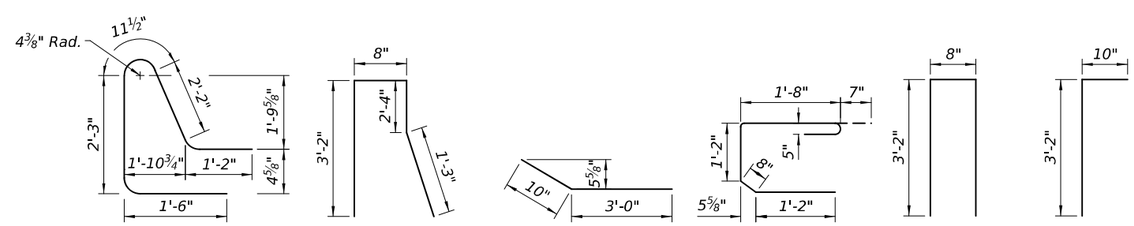

BAR d5(E) BAR d6(E) BAR h2(E) BAR s(E) BAR v(E) BAR v1(E)

MINIMUM BAR LAP

#5 Bar = 2'-1"

MODEL: Default
FILE NAME: S:\JOL\6300-8399\6346\125\Drawings\CAD\ORD-10.12\CADsheets\057-0163-0164-029-APE4.dgn

12/5/2025 1:43:02 PM

STRAND ASSOCIATES
1170 SOUTH HOUBOLT ROAD
JOLIET, ILLINOIS 60431
(815) 744-4200
IDFPR NO. 184-001273

USER NAME = CodyH	DESIGNED - ELR	REVISED -	
	CHECKED - NDR	REVISED -	
PLOT SCALE = 0:2.0000 ':" / in.	DRAWN - CJH	REVISED -	
PLOT DATE = 12/5/2025	CHECKED - ELR	REVISED -	

STATE OF ILLINOIS
DEPARTMENT OF TRANSPORTATION

ABUTMENT PLAN AND ELEVATION (4 OF 4)
STRUCTURE NO. 057-0164 (NB)

SHEET 29 OF 32 SHEETS

F.A.I. RTE.	SECTION	COUNTY	TOTAL SHEETS	SHEET NO.
55	(57-3)BR	MCLEAN	126	110
		CONTRACT NO. 70F37		
		ILLINOIS FED. AID PROJECT		

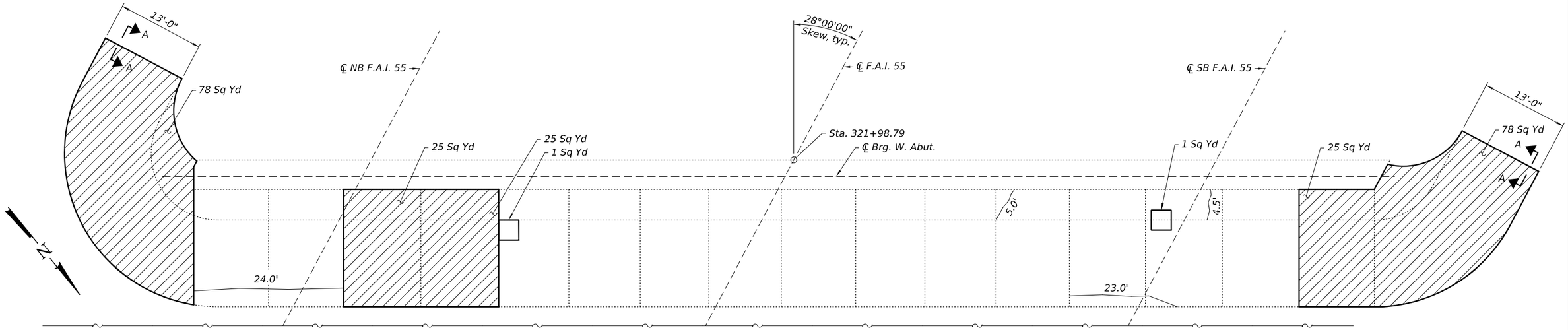

S.N. 057-0164 WEST ABUTMENT S.N. 057-0163

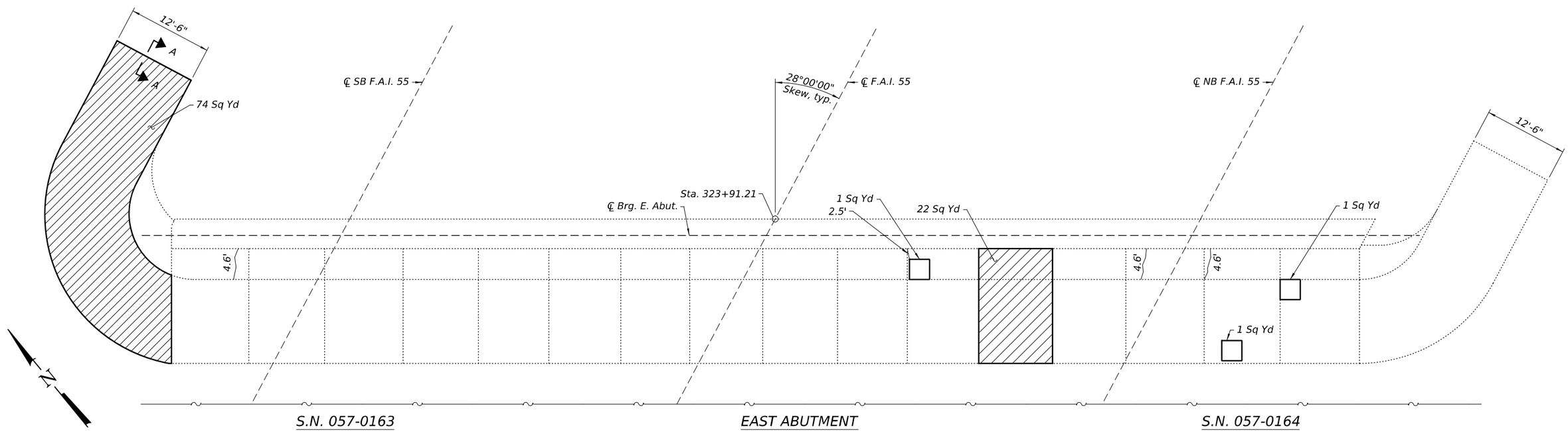

S.N. 057-0163 EAST ABUTMENT S.N. 057-0164

LEGEND

- Slope Wall Repair
- Slope Wall Removal and Slope Wall 4 Inch
- Slope Wall Crack Sealing

Notes:

1. For Section A-A, Bill of Material and other details related to these repairs, see sheet 31 of 32.
2. Prior to beginning work, the Contractor will delineate areas of each type of repair and come to an agreement with the Engineer on the limits of each repair. The square yardages of each type of repair will be documented and agreed upon for payment. Execution of the repairs will be as directed by the Engineer and in accordance with the special provisions. The Contractor will be paid for the quantity actually furnished at the unit price bid for the work for each type of repair.
3. Layout and limits of the slope wall removal and replacement may be varied to suit conditions in the field as directed by the Engineer.

MODEL: Default
FILE NAME: S:\JOL\63000-63999\63461\25\Drawings\CAD\ORD-10.12\CADsheets\057-0163-0164-030-SWR.dgn
11/6/2025 1:28:18 PM

STRAND ASSOCIATES®
1170 SOUTH HOUBOLT ROAD
JOLIET, ILLINOIS 60431
(815) 744-4200
IDFPR NO. 184-001273

USER NAME = emilyre	DESIGNED - ELR	REVISED -	
	CHECKED - NDR	REVISED -	
PLOT SCALE = 0:2.0000 ':" / in.	DRAWN - CJH	REVISED -	
PLOT DATE = 11/6/2025	CHECKED - ELR	REVISED -	

STATE OF ILLINOIS
DEPARTMENT OF TRANSPORTATION

SLOPEWALL REPAIRS AND DETAILS (1 OF 2)
STRUCTURE NO. 057-0163 AND 057-0164

SHEET 30 OF 32 SHEETS

F.A.I. RTE.	SECTION	COUNTY	TOTAL SHEETS	SHEET NO.
55	(57-3)BR	MCLEAN	126	111

CONTRACT NO. 70F37

ILLINOIS FED. AID PROJECT

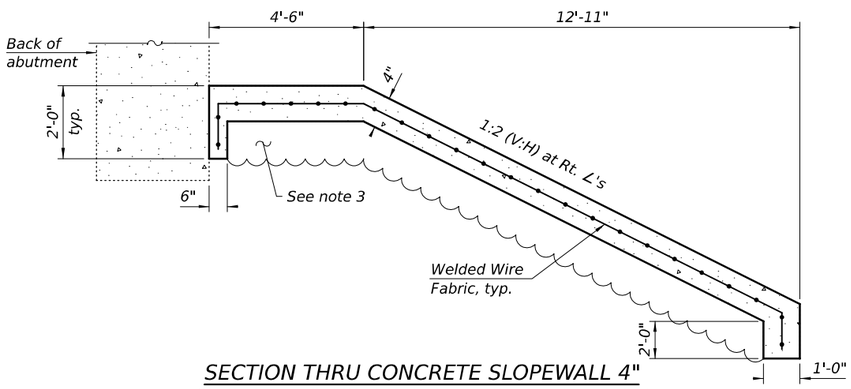

SECTION THRU CONCRETE SLOPEWALL 4"

(North slope wall at West Abut. shown, other locations similar)

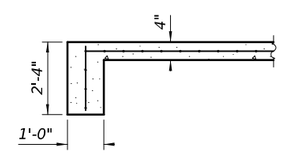

SECTION A-A

Notes:

1. Slope wall shall be reinforced with welded wire fabric, 6in. x 6in. - W4.0 x W4.0, weighing 58 lbs. per 100 sq. ft.
2. Existing welded fabric shall extend 6" into the area of Slope Wall Repair. The exposed 6" of welded wire fabric on either side shall be lapped with the new slope wall reinforcement.
3. Voids below the slope wall shall be filled prior to placement of the new slope wall with Controlled Low-Strength Material as specifiied in Article 593 of the Standard Specifications. For bidding purposes the volume of voids has been estimated as 103 CY at these locations, but the actual volume of materials will be determined by the Contractor after slope wall removal and approved by the Engineer.

BILL OF MATERIAL

ITEM	UNIT	QUANTITY
SLOPE WALL REMOVAL	SQ YD	327
SLOPE WALL 4 INCH	SQ YD	327
CONTROLLED LOW-STRENGTH MATERIAL	CU YD	103
SLOPE WALL CRACK SEALING	FOOT	72.8
SLOPE WALL REPAIR	SQ YD	5

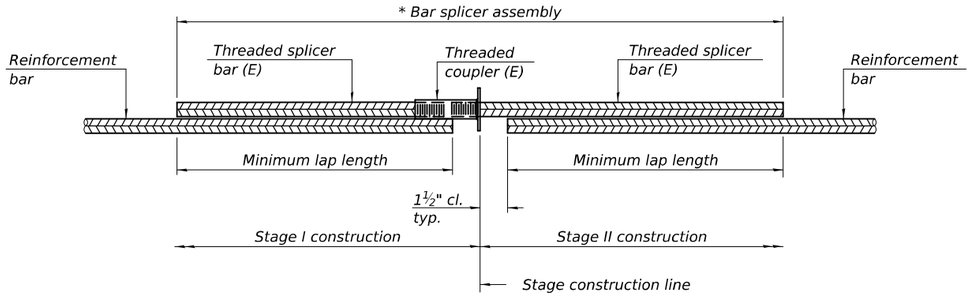

STANDARD BAR SPLICER ASSEMBLY PLAN

Only bar splicer assemblies as presented on the approved QPL list may be used.

Threaded splicer bar length = min. lap length + 1½" + thread length

* Epoxy not required on Bar Splicer Assembly components used in conjunction with black bars.

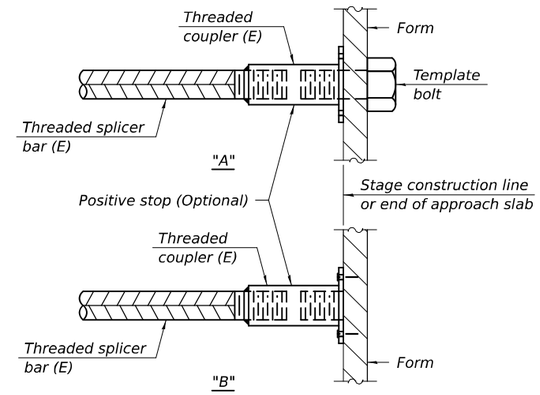

INSTALLATION AND SETTING METHODS

"A" : Set bar splicer assembly by means of a template bolt.
"B" : Set bar splicer assembly by nailing to wood forms or cementing to steel forms.
(E) : Indicates epoxy coating.

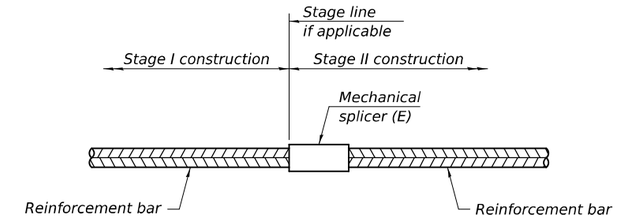

STANDARD MECHANICAL SPLICER

STRUCTURE NO. 057-0164

Location	Bar Size	No. Assemblies required
Deck End	#6	4

STRUCTURE NO. 057-0163

Location	Bar Size	No. Assemblies required
Deck End	#6	4

STRUCTURE NO. 057-0164

Location	Bar Size	No. Assemblies required	Minimum lap length
Deck End	#6	20	3'-1"
Approach	#5	182	2'-0"
Approach	#8	136	5'-2"
W. Abut.	#5	14	2'-1"
E. Abut.	#5	14	2'-1"

STRUCTURE NO. 057-0163

Location	Bar Size	No. Assemblies required	Minimum lap length
Deck End	#6	20	3'-1"
Approach	#5	182	2'-0"
Approach	#8	136	5'-2"
W. Abut.	#5	14	2'-1"
E. Abut.	#5	14	2'-1"

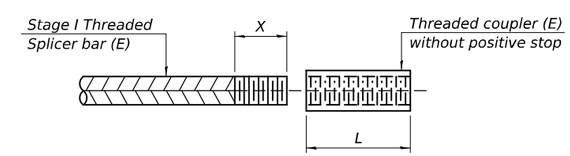

THREADING OF ASSEMBLIES

The threaded length "X" shall be no more than L/2. The bar should be tightened until 0-1 thread(s) is/are exposed.

Notes:
Splicer bars shall be deformed with threaded ends and have a minimum 60 ksi yield strength.
All reinforcement shall be lapped and tied to the splicer bars.
Bar splicer assemblies shall be epoxy coated according to the requirements for reinforcement bars. See Section 508 of the Standard Specifications.
See approved list of bar splicer assemblies and mechanical splicers for alternatives.

BSD-1 4-4-2025

STRAND ASSOCIATES
1170 SOUTH HOUBOLT ROAD
JOLIET, ILLINOIS 60431
(815) 744-4200
IDFPR NO. 184-001273

USER NAME = CodyH	DESIGNED -	REVISED -	STATE OF ILLINOIS DEPARTMENT OF TRANSPORTATION
	CHECKED -	REVISED -	
PLOT SCALE = 0:2.0000 ':" / in.	DRAWN - CJH	REVISED -	
PLOT DATE = 12/5/2025	CHECKED - ELR	REVISED -	

BAR SPLICER ASSEMBLY AND MECHANICAL SPLICER DETAILS
STRUCTURE NO. 057-0163 AND 057-0164

SHEET 32 OF 32 SHEETS

F.A.I. RTE.	SECTION	COUNTY	TOTAL SHEETS	SHEET NO.
55	(57-3)BR	MCLEAN	126	113

CONTRACT NO. 70F37
ILLINOIS FED. AID PROJECT

MODEL: Default
FILE NAME: S:\JOL\6300-639\96346\125\Drawings\CAD\ORD-10.12\CADsheets\057-0163-0164-032-BSD.dgn
12/5/2025 1:43:35 PM

State

STATE OF ILLINOIS
DEPARTMENT OF TRANSPORTATION

PLANS FOR PROPOSED FEDERAL AID INTERSTATE HIGHWAY

SCALES { PLAN 1 INCH = 100 FT; PROFILE HOR. 1 INCH = 100 FT; PROFILE VERT. 1 INCH = 10 FT; CROSS SECTIONS 1 INCH = 5 FT }

F.A.I. ROUTE 55 SECS. 57-3 & 57-3B McLEAN COUNTY

SEE SHEET NO. 5 FOR INDEX OF SHEETS
SEE SHEET NO. 6 FOR SUMMARY OF QUANTITIES

PROJECT I-55-5(43)167
C-93-034-72

FOR INFORMATION ONLY

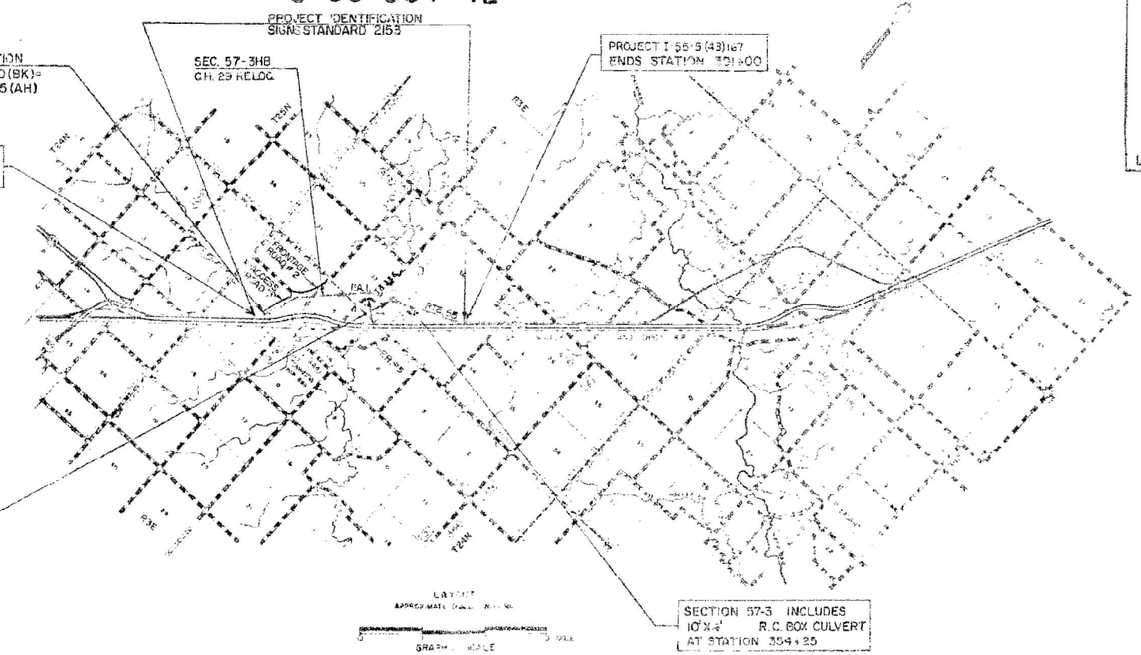

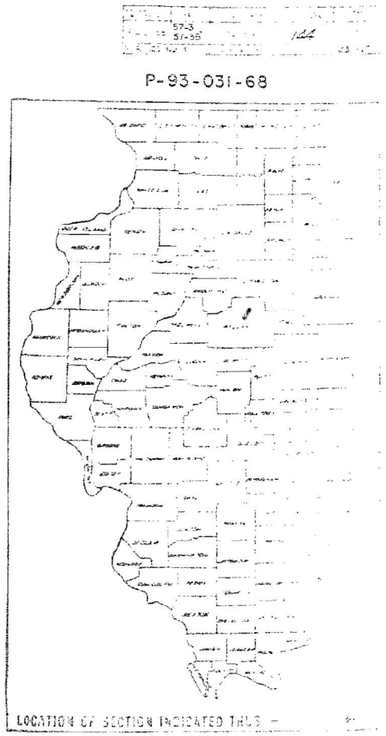

DEPARTMENT OF TRANSPORTATION
STATE ENGINEER
PLANNING
DIRECTOR
UNDER SECRETARY, DIRECT TRANSPORTATION ENGINEER
SECRETARY

HURST-ROSCHE ENG. INC.
1400 E. TREMONT ST., HILLSBORO

DEPARTMENT OF TRANSPORTATION
APPROVED
/ I. James Ulak 4/3/73
ACTING DIRECTOR

GROSS LENGTH OF PROJECT = 19,475.55 FT. = 3.689 MI.
NET LENGTH OF PROJECT = 19,475.55 FT. = 3.689 MI.

HIGHWAY CLASSIFICATION
F.A.I. 55 = 3290(93)-TRUNK-2027(FOC.2)

CONTR. ST NUMBER CONTRACT NO. 70F37
McLEAN COUNTY SECTION 57-3 & F.A. ROUTE 55
57-3B

MODEL: Default
FILE NAME: S:\JOL\6300-639\96346\125\Drawings\CAD\ORD-10.12\CADsheets\057-0163-0164-033-EX.dgn

STRAND ASSOCIATES
1170 SOUTH HOUBOLT ROAD
JOLIET, ILLINOIS 60431
(815) 744-4200
IDFPR NO. 184-001273

USER NAME = emilyre	DESIGNED -	REVISED -	
	CHECKED -	REVISED -	
PLOT SCALE = 0:2.0000 ':" / in.	DRAWN - CJH	REVISED -	
PLOT DATE = 11/6/2025	CHECKED - ELR	REVISED -	

STATE OF ILLINOIS
DEPARTMENT OF TRANSPORTATION

EXISTING DRAWINGS
STRUCTURE NO. 057-0163 AND 057-0164

F.A.I. RTE.	SECTION	COUNTY	TOTAL SHEETS	SHEET NO.
55	(57-3)BR	MCLEAN	126	114
		CONTRACT NO. 70F37		
	ILLINOIS	FED. AID PROJECT		

11/6/2025 1:28:21 PM

#86963 #119 3-10-00 FAI 55 McLean Co. SEC. (57-3-1,57-3,57-3-2,57-2)RS I&R #119 copy

FOR INFORMATION ONLY

119

98%

7-7-2001

057-0163 & -0164

INDEX OF SHEETS

STANDARDS

000001-03	Standard Symbols, Abbreviations And Patterns
001001	Areas of Reinforcement Bars
001006	Decimal of an Inch and of a Foot
420001-02	Pavement Joints
420401-02	Bridge Approach Pavement
420701	Pavement Fabric
442001-02	Class A Patches
442101-02	Class B Patches
482006	Bituminous Shoulder - Adjacent To Rigid Pavement
482101	Rumble Strip for PCC or Bituminous Shoulder
542301	Precast Reinforced Concrete Flared End Section
601001	Sub-Surface Drains
601101	Concrete Headwall For Pipe Drains
606301-02	PC Concrete Islands And Medians
609001-01	Bridge Approach Shoulder Pavement And Drain
630001-02	Steel Plate Beam Guardrail
630201-03	PCC/Blt Stabilization At Steel Plate Beam Guardrail
630301	Shoulder Widening for Type 1 Guardrail Terminals
631031-02	Traffic Barrier Terminal, Type 6
635001	Delineators
635006	Reflector and Terminal Marker Placement
635011	Reflector Marker and Mounting Details
665001	Woven Wire Fence
701001	Off-Road Operations, 2-L, 2-W, 4.5 m (15') Min. Away, For Speeds > 45 MPH
701006-01	Off-Road Operations, 2-L, 2-W, 4.5 m (15') To 600 mm (24"). Away, Speeds > 45 MPH
701011	Off-Road Moving Operations, 2-L, 2-W, Day Only, For Speeds > 45 MPH
701101	Off-Road Operations, Multilane, Less Than 4.5 m (15') Away, Speeds > 45 MPH
701106	Off-Road Operations, Multilane, More Than 4.5 m (15') Away, For Speeds > 45 MPH
701201-01	Lane Closure, 2L, 2W, Day Only, On-Rd To 600 mm (24") Off-Rd For Speeds > 45 MPH
701316-01	Lane Closure, 2-L, 2-W, Bridge Repair, For Speeds > 45 MPH
701326-01	Lane Closure, 2-L, 2-W, Pavement Widening, For Speeds > 45 MPH
701401	Lane Closure Multilane with Barrier, For Speeds > 45 MPH
701402	Lane Closure Multilane with Barrier
701411-01	Lane Closure, Multilane, At Entrance Or Exit Ramp, For Speeds > 45 MPH
701426-01	Lane Closure, Multilane, Intermittent Or Moving Operation, For Speeds > 45 MPH
702001-01	Traffic Control Devices
704001	Temporary Concrete Barrier
720011	Metal Posts (signs, markers, and delineators)
780001-01	Typical Pavement Markings
781001-02	Typical Applications, Raised Reflective Pavement Markers
840006	Traffic Signal Mounting Details
846001	Detector Loop Installations
846006	Typical Layout For Detection Loops

MICROFILMED _____
REEL NUMBER _____
AWARDED _____
RESIDENT ENGINEER _____
AS BUILT CHANGES WERE MADE
ON THE FOLLOWING SHEETS _____

JULIE 1-800-892-0123

DISTRICT 3 NO. (815) 434-6131

PROJECT ENGINEER: STEVE ANDREWS
UNIT CHIEF: MICHELE LINDEMANN
TOWNSHIP: NORMAL,TOWANDA & MONEY CREEK

CONTRACT NO. 86963 057-0163(SB) 0164(NB)

STATE OF ILLINOIS
DEPARTMENT OF TRANSPORTATION
DIVISION OF HIGHWAYS
PLANS FOR PROPOSED
FEDERAL AID HIGHWAY

F.A.I. ROUTE 55 (I-55)
SECTION (57-3-1,57-3,57-3-2,57-2)RS
McLEAN COUNTY PROJ. ACIM-55-5(99)166

C-93-001-00

END IMPROVEMENT
STA. 625+00

S.N. 057-0166
STA. 571+30

S.N. 057-0169
S.N. 057-0170
STA. 608+35.40

S.N. 057-0163
S.N. 057-0164
STA. 322+95

S.N. 057-0162
STA. 259+36.01

S.N. 057-0167
S.N. 057-0168
STA. 588+37.50

BEGIN IMPROVEMENT
STA. 53+75 S.B.
STA. 39+00 N.B.

S.N. 057-0801
STA. 571+67

S.N. 057-0165
STA. 464+85.00

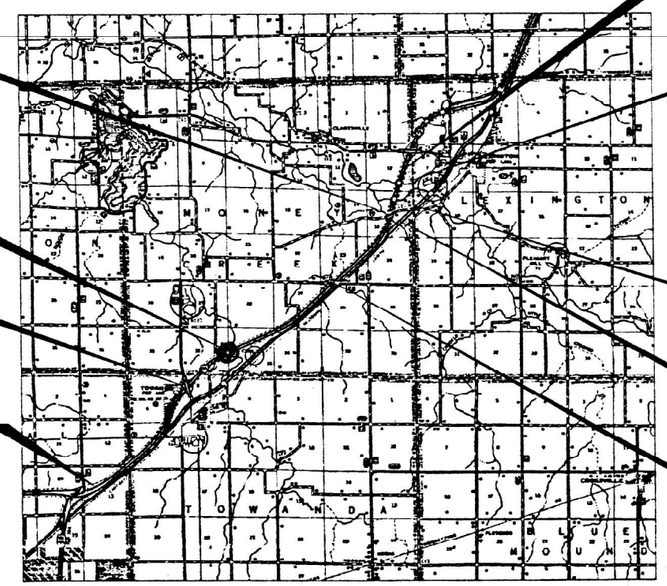

GROSS & NET LENGTH OF IMPROVEMENT:
S.B. = 54,100.19 FT. = 10.25 MI.
N.B. = 52,951.28 FT. = 10.03 MI.

STATION EQUATION S.B. 51+14.53 BK. = 86+60.28 AH.
STATION EQUATION N.B. 36+03.18 BK. = 98+45.54 AH.

F.A.I. RTE.	SECTION	COUNTY	TOTAL SHEETS	SHEET NO.
55	*	McLEAN	139	1

F.A.P. RES. NO. | ILLINOIS PROJECT
*(57-3-1,57-3,57-3-2,57-2)R
P-93-043-99
D-93-021-00

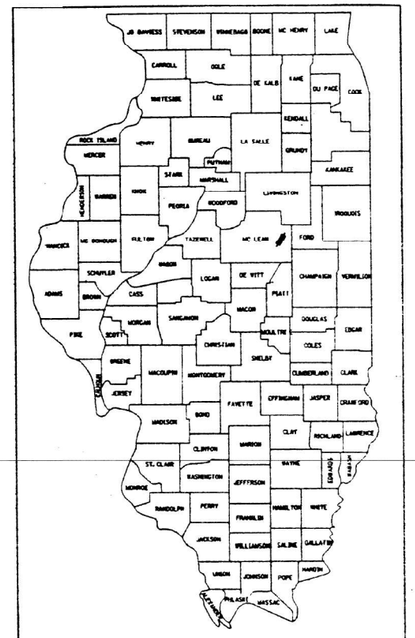

LOCATION OF SECTION INDICATED THUS: -

DESIGN DESIGNATION - INTERSTATE
ADT (2000) = 27300
P.V. - 79.5%
S.U. - 2.5%
M.U. - 18.0%

STATE OF ILLINOIS
DEPARTMENT OF TRANSPORTATION
DIVISION OF HIGHWAYS

SUBMITTED JANUARY 3, 2000
DISTRICT ENGINEER
February 4, 2000
ENGINEER OF DESIGN AND ENVIRONMENT
February 4, 2000
DIRECTOR, DIVISION OF HIGHWAYS

3-211

McLEAN COUNTY SECTION: (57-3-1,57-3,57-3-2,57-2)RS ROUTE: F.A.I. 55

MODEL: Default
FILE NAME: S:\JOL\6300--6399\6346\125\Drawings\CAD\ORD-10.12\CADsheets\057-0163-0164-034-EX.dgn

STRAND ASSOCIATES
1170 SOUTH HOUBOLT ROAD
JOLIET, ILLINOIS 60431
(815) 744-4200
IDFPR NO. 184-001273

USER NAME = emilyre	DESIGNED -	REVISED -	
	CHECKED -	REVISED -	
PLOT SCALE = 0:2.0000 ':" / in.	DRAWN - CJH	REVISED -	
PLOT DATE = 11/6/2025	CHECKED - ELR	REVISED -	

STATE OF ILLINOIS
DEPARTMENT OF TRANSPORTATION

EXISTING SOIL BORINGS
STRUCTURE NO. 057-0163 AND 057-0164

F.A.I. RTE.	SECTION	COUNTY	TOTAL SHEETS	SHEET NO.
55	(57-3)BR	MCLEAN	126	115
		CONTRACT NO. 70F37		
	ILLINOIS	FED. AID PROJECT		

11/6/2025 1:28:23 PM

STATE OF ILLINOIS

ROUTE NO.	SECTION	COUNTY	TOTAL SHEETS	SHEET NO.
F.A.I. 55	57-3B	McLean	144	56
FED. ROAD DIST. NO. 7		ILLINOIS	FED. AID PROJECT	

SHEET NO. 17
13 SHEETS

Boring No. 1
Station 321+65
Offset 66' Lt. ℄

Surface Water El. ——
Groundwater El. at Completion -5.5' (Wash Boring)
After 24 Hours -5.0'

Description	Elevation	N	Qu(t/sf)	w(%)	Recovery
Ground Surface	751.4 0				
DARK BROWN SILTY CLAY					
(MOIST, STIFF)	749.7	11	B 1.6	21	80
BROWN MOTTLED SILTY CLAY W/TR. SAND (MOIST, MEDIUM)	-5	6	B 1.2	18	80
FREE WATER ▽	744.4				
GREY BROWN SILTY SAND (LOOSE)	742.4	4	- -	A.S.	
GREY CLAY LOAM W/TR. SAND & GRAVEL (MOIST, V. STIFF)	-10	21	B 2.9	17	100
GREY FINE TO MED. SAND (V. LOOSE)	739.9	2	- -	N.S.	
(DENSE)	-15	37	- -	100	
GREY SILT (MOIST, STIFF)	734.4	52	S 1.6	18	100
GREY FINE TO COARSE SILTY SAND (DENSE)	731.9 -20	50	- -	100	
SAME MATERIAL	-20				
(V. DENSE)		55	- -	100	
GREY SILT (MOIST, HARD)	727.4 -25	51	S 1.5	19	80
GREY CLAY LOAM W/TR. SAND & GRAVEL (HARD)	725.4	173	- -	N.S.	
(HARD)	-30	81	- -	N.S.	
(HARD)		114	- -	N.S.	
(DRY, HARD)	-35 715.9	138	B 6.8	10	80
END OF BORING	-40				

Boring No. 2
Station 322+35
Offset 47' Lt. ℄

Surface Water El. ——
Groundwater El. at Completion -5.0' (Wash Boring)
After 24 Hours -5.0'

Description	Elevation	N	Qu(t/sf)	w(%)	Recovery
Ground Surface	751.6 0				
DARK BROWN SILTY CLAY					
(MOIST, STIFF)	748.1	18	B 1.9	-	50
BROWN SILTY CLAY (MOIST, STIFF)	747.6				
BROWN MOTTLED SILTY CLAY (MOIST, STIFF)	-5 746.1	10	B 1.8	-	100
FREE WATER ▽	7				
BROWN SILTY SAND (LOOSE)	744.1	0	- -	-	100
GREY CLAY LOAM		33	3.4		
(MOIST, HARD)	-10	32	B 5.7	-	100
(HARD)	739.6				
GREY FINE TO MED. SAND (MEDIUM)	737.6	29	- -	100	
GREY SILT (STIFF)	-15	10	- -	N.S.	
(V. STIFF)		27	S 2.0	-	100
GREY FINE & SILTY SAND (V. DENSE)	732.1 -20	42	- -	100	
SAME MATERIAL	-20				
GREY FINE TO COARSE SAND	730.6				
(DENSE)		41	- -	80	
GREY SILT (MOIST, HARD)	727.1 -25	37	S 3.0	16	80
GREY CLAY LOAM W/TR SAND & GRAVEL (DAMP, HARD)	725.1	42	B 4.0	13	100
(HARD)	-30	100	- -	N.S.	
(HARD)		90	- -	N.S.	
(HARD)	-35	68	- -	N.S.	
(HARD)		97	- -	N.S.	
(DAMP, HARD)	-40	97	14	A.S.	
END OF BORING					

Boring No. 3
Station 322+96
Offset 67' Lt. ℄

Surface Water El. ——
Groundwater El. at Completion -5.5' (Wash Boring)
After 24 Hours -5.0'

Description	Elevation	N	Qu(t/sf)	w(%)	Recovery
Ground Surface	751.3 0				
DARK BROWN SILTY CLAY					
(MOIST, STIFF)	748.8	5	B 1.8	24	100
BROWN MOTTLED SILTY CLAY W/TR SAND (MOIST, STIFF)		7	1.1	22	
FREE WATER ▽	746.8		B		
BROWN SANDY CLAY LOAM (SOFT)	-5	6	0.4	21	50
	743.8	3	-	-	100
BROWN SAND W/FINE GRAVEL (MEDIUM)	742.3	14			
GREY CLAY W/TR SAND & GRAVEL (MOIST, HARD)	-10	37	-	19	5
(MOIST, HARD)	738.3	38	-	19	5
GREY FINE TO MEDIUM SAND (MEDIUM)	-15 735.8	29	-	-	100
GREY SILT (MOIST, V. STIFF)		33	S 2.9	19	100
GREY FINE TO CSE SAND (V. DENSE)	731.8 -20	54	-	-	100
SAME MATERIAL	-20				
(DENSE)		48	-	-	100
(DENSE)	-25	48	-	-	100
GREY CLAY LOAM W/TR SAND & GRAVEL	725.3				
(DAMP, HARD)	5"	25 100	S 8.8	13	100
	721.8	101			
GREY FINE TO CSE SAND W/TR GRAVEL (V. DENSE)	-30 720.3	31 100	-	-	100
GREY CLAY LOAM W/TR SAND & GRAVEL (DAMP, HARD)		93	B 10.1	11	100
(DAMP, HARD)	-35 715.8	97	B 9.0	11	80
END OF BORING	-40				

Boring No. 4
Station 323+65
Offset 46' Lt. ℄

Surface Water El. ——
Groundwater El. at Completion -5.5' (Wash Boring)
After 24 Hours -5.0'

Description	Elevation	N	Qu(t/sf)	w(%)	Recovery
Ground Surface	751.5 0				
DARK BROWN SILTY CLAY					
(MOIST, STIFF)	748.5	13	B 2.2	22	100
BROWN MOTTLED SILTY CLAY					
(MOIST, STIFF)	-5 746.0	6	B 1.9	21	100
FREE WATER ▽					
GREY BROWN MOTTLED, SANDY SILTY CLAY (MOIST, V. SOFT)		2	-	22	A.S.
	742.5				
GREY CLAY (V. STIFF)	-10	30	-	-	N.S.
(MOIST, STIFF)	739.0	9	B 1.6	21	100
GREY FINE TO MEDIUM SAND (MEDIUM)	-15 736.5	12	-	-	
GREY SILT		6	-	-	100
(MOIST, MEDIUM)		5 37	B 0.5 S 2.9	20 22	100
(MOIST, V. STIFF)	-20 731.5	19	S 1.9	21	100
GREY FINE SAND		20			
SAME MATERIAL	-20				
GREY FINE TO CSE SAND W/TR. FINE GRAVEL	731.0				
(V. DENSE)		63	-	-	100
(DENSE)	-25	33	-	-	N.S.
GREY CLAY LOAM W/TR. SAND & GRAVEL (DAMP, HARD)	725.0	41	B 4.4	11	100
(HARD)	-30	145	-	-	N.S.
(DAMP, HARD)		107	S 8.1	10	100
(DAMP, HARD)	-35 716.0	105	B 8.7	11	100
END OF BORING	-40				

N - Standard Penetration Test Blows per ft. to Drive 2" O.D. Split Spoon Sampler 12" with 140 lb. Hammer falling 30".

N. S. - No Sample

Qu - Unconfined Compressive Strength - t/sf
NP - Non Plastic
S.T. - Shelby Tube
w - Water Content - Percentage of Oven Dry Weight - %

Type Failure
B - Bulge Failure
S - Shear Failure
E - Est. Value

A.S. - Auger Sample

FOR INFORMATION ONLY

DESIGNED Richard S. W
CHECKED
DRAWN Leona Heeren
CHECKED GM

SEPT. 24 1971
EXAMINED
ENGINEER OF BRIDGE AND TRAFFIC STRUCTURES
PASSED H. E. Baumann
ENGINEER OF DESIGN
APPROVED Richard E. Gottschalk
CHIEF HIGHWAY ENGINEER

BORING DATA
SOUTH BOUND LANES
F.A.I. RT. 55 SEC. 57-3B
McLEAN COUNTY
STATION 322+35

MODEL: Default
FILE NAME: S:\JOL\6300-6399\6346\125\Drawings\CAD\ORD-10.12\CAD\sheets\057-0163-0164-035-EX.dgn

STRAND ASSOCIATES
1170 SOUTH HOUBOLT ROAD
JOLIET, ILLINOIS 60431
(815) 744-4200
IDFPR NO. 184-001273

USER NAME = emilyre	DESIGNED -	REVISED -	
	CHECKED -	REVISED -	
PLOT SCALE = 0:2.0000 ':" / in.	DRAWN - CJH	REVISED -	
PLOT DATE = 11/6/2025	CHECKED - ELR	REVISED -	

STATE OF ILLINOIS
DEPARTMENT OF TRANSPORTATION

EXISTING SOIL BORINGS
STRUCTURE NO. 057-0163 AND 057-0164

F.A.I. RTE.	SECTION	COUNTY	TOTAL SHEETS	SHEET NO.
55	(57-3)BR	MCLEAN	126	116
		CONTRACT NO. 70F37		
		ILLINOIS	FED. AID PROJECT	

11/6/2025 1:28:26 PM

STATE OF ILLINOIS

ROUTE NO.	SECTION	COUNTY	TOTAL SHEETS	SHEET NO.
F.A.I. 55	57-3B	McLean	144	57
FED. ROAD DIST. NO. 7	ILLINOIS	FED. AID PROJECT		

SHEET NO 19 OF 19 SHEETS

Boring No. 5
Station 322+24
Offset 46' Rt. ℄

Surface Water El. ———
Groundwater El. at
Completion -4.0' (Wash Boring)
After 24 Hours -5.5'

Description	Elevation	N	Qu(t/sf)	w(%)	Recovery
Ground Surface	752.3 0				
DARK BROWN SILTY CLAY					
(MOIST, STIFF)	749.8	7	B 2.0	24	100
BROWN SILTY CLAY (MOIST, STIFF)	748.8	8	2.0	20	
BROWN, MOTTLED SILTY CLAY (WET, STIFF)	-5	9	B 2.4	26	100
FREE WATER ▽					
BROWN SILTY SAND & GRAVEL (LOOSE)	745.8 744.8	3	-	-	
GREY CLAY LOAM W/TR SAND & GRAVEL		4	-	22	A.S.
(MOIST, MEDIUM)	-10 742.3	10	B 4.1		100
GREY SAND (DENSE)	740.8	16	-	-	
GREY SILT (MOIST, V. STIFF)		33	S 3.9	21	100
(MOIST, STIFF)	-15	24	S 1.9	21	100
(MOIST, V. STIFF)		31	S 3.3	19	100
(MOIST, STIFF)	-20 732.3	16	S 1.3	21	100
GREY FINE SILTY SAND (DENSE)		18	-	-	

Description	Elevation	N	Qu(t/sf)	w(%)	Recovery
SAME MATERIAL	-20 731.3				
GREY FINE TO CSE. SAND (DENSE)	728.3	49	-	-	100
GREY CLAY LOAM W/ TR. GRAVEL (V. STIFF)	-25	32	-	-	N.S
		23	-	-	N.S.
(HARD)	-30	40	-	-	N.S.
(HARD)		54			N.S.
(DAMP, HARD)	-35	71	S 10.7	10	100
(HARD)	714.3	54	-	-	N.S.
END OF BORING	-40				

Boring No. 6
Station 322+94
Offset 66' Rt. ℄

Surface Water El. ———
Groundwater El. at
Completion -4.0' (Wash Boring)
After 24 Hours -4.5'

Description	Elevation	N	Qu(t/sf)	w(%)	Recovery
Ground Surface	752.4 0				
DARK BROWN SILTY CLAY (MOIST, STIFF)	750.4		B		
BROWN SILTY CLAY (MOIST, STIFF)	749.5	5	2.4	23	100
BROWN MOTTLED SILTY CLAY (MOIST, STIFF)	-5	6	2.0	23	
(MOIST, STIFF)	746.4	12	B 1.9	25	100
▽ FREE WATER	GREY BROWN SILTY CLAY (MEDIUM) 745.4				
BROWN SILTY SAND (LOOSE)		3	-	-	100
GREY BROWN CLAY LOAM W/TR. (MOIST, STIFF)	742.9	3	2.0	17	
SAND & GRAVEL (MOIST, V.STIFF)		2	B 3.6	17	
BROWN FINE SAND (LOOSE)	-10 741.4	5		-	80
GREY FINE & SILTY SAND (MEDIUM)		21	-	-	100
GREY SILT (MEDIUM)	-15 738.9	11	-	-	N.S.
(MEDIUM)		15	-	-	N.S.
GREY FINE & SILTY SAND (DENSE)	-20 732.9	41	-	-	100

Description	Elevation	N	Qu(t/sf)	w(%)	Recovery
(DENSE)	-20 731.4	44	-	-	100
(MEDIUM)	-25	23	-	-	100
GREY CLAY LOAM	724.9	9 30	-	-	N.S.
(MOIST, HARD)	-30	40	-	-	N.S.
(HARD)		49	-	-	N.S.
(HARD)	-35	81	-	-	N.S.
(HARD)		55	-	-	N.S.
HARD)	-40 711.9	47	-		A.S.
END OF BORING					

Boring No. 7
Station 323+54
Offset 46' Rt. ℄

Surface Water El. ———
Groundwater El. at
Completion -3.0' (Wash Boring)
After 24 Hours -4.0'

Description	Elevation	N	Qu(t/sf)	w(%)	Recovery
Ground Surface	751.4 0				
DARK BROWN SILTY CLAY (MOIST, STIFF)	750.4				
BROWN SILTY CLAY (MOIST, STIFF)	749.4	3	B		
BROWN MOTTLED SILTY CLAY W/TR. SAND (MOIST, STIFF)		10	1.94	20	80
	-5		B		
FREE WATER ▽	745.9	9	1.60	20	100
(MOIST, STIFF)	745.4				
BROWN SAND W/TR. GRAVEL (LOOSE)	744.4	3			
GREY CLAY LOAM W/TR. GRAVEL (MOIST, HARD)	742.4	35	-	-	A.S.
GREY FINE TO MED. SAND (DENSE)	-10	35	-	-	100
(MEDIUM)	737.9	22	-	-	80
GREY SILT (STIFF)	-15	19	S 0.97	-	100
(MOIST, V. STIFF)	732.9	32	S 2.0	18	100
GREY FINE TO MED. SAND (DENSE)	-20	42	-	-	100

Description	Elevation	N	Qu(t/sf)	w(%)	Recovery
SAME MATERIAL	-20				
(V. DENSE)	727.4	58	-	-	80
GREY CLAY LOAM W/TR. GRAVEL (DAMP, V. STIFF)	-25	31	B 2.4	11	80
(V. STIFF)		35	-	-	N.S.
(HARD)	-30	52	-	-	N.S.
(HARD)		48	-	-	N.S.
(HARD)	-35 715.9	54	-	-	N.S.
END OF BORING	-40				

Boring No. 8
Station 324+25
Offset 66' Rt. ℄

Surface Water El. ———
Groundwater El. at
Completion -3.0' (Wash Water Hole)
After 24 Hours -3.0

Description	Elevation	N	Qu(t/sf)	w(%)	Recovery
Ground Surface	751.4 0				
DARK BROWN SILTY CLAY (MOIST, STIFF)	749.9				
BROWN SILTY CLAY W/TR SAND (MOIST, STIFF)	748.4	10	B 1.6	23	100
BROWN MOTTLED SILTY CLAY (DAMP, MEDIUM)	-5 746.4	3	B 0.8	13	100
FREE WATER ▽	745.9				
BROWN SAND (LOOSE)	744.4	5	B		
GREY CLAY LOAM W/TR. GRAVEL (MOIST, VERY STIFF)		16	6.3	15	100
	-10 741.4	13	-	-	
GREY FINE TO MED. SAND (DENSE)		15	-	-	100
	738.9	19	-	-	100
GREY SILT (HARD)	738.4	27	S 4.4		
GREY FINE TO MED. SAND W/ SILT SEAMS (DENSE)	-15 735.9	35	-	-	100
GREY SILT (MOIST, V. STIFF)	733.4	24	S 3.5	20	100
GREY FINE TO CSE. SAND W/TR. GRAVEL (DENSE)	-20	47	-	-	100

Description	Elevation	N	Qu(t/sf)	w(%)	Recovery
SAME MATERIAL W/TR. CLAY LOAM	-20				
(V. DENSE)	727.9	66	-	-	100
GREY CLAY LOAM W/ TR. GRAVEL	-25	34	-	-	N.S.
(MOIST, HARD) SPOON REFUSAL (SMALL ROCK)	5"	13 55+	-	-	N.S.
(HARD)	-30	51	-	-	N.S.
(HARD)		50	-	-	N.S.
(DAMP, HARD)	-35 715.9	75	-	10	A.S.
END OF BORING	-40				

N - Standard Penetration Test Blows per ft. to Drive 2" O.D. Split Spoon Sampler 12" with 140 lb. Hammer falling 30".

N. S. - No Sample

Qu - Unconfined Compressive Strength - t/sf
NP - Non Plastic
S.T. - Shelby Tube
w - Water Content - Percentage of Oven Dry Weight - %

Type Failure
B - Bulge Failure
S - Shear Failure
E - Est. Value

A.S. - Auger Sample

FOR INFORMATION ONLY

DESIGNED Prakash S. W.
CHECKED Mark McCormick
DRAWN Leona Heeren
CHECKED GM PSI.

SEPT. 24 1971
EXAMINED E. L. Summers — ENGINEER OF BRIDGE AND TRAFFIC STRUCTURES
PASSED H. E. Bergman — ENGINEER OF DESIGN
APPROVED Richard E. Tolliver — CHIEF HIGHWAY ENGINEER

BORING DATA
NORTH BOUND LANES
F.A.I. RT. 55 SEC. 57-3B
McLEAN COUNTY
STATION 322+95

MODEL: Default
FILE NAME: S:\JOL\6300--639\9634\125\Drawings\CAD\ORD-10,12\CADsheets\057-0163-0164-036-EX.dgn

STRAND ASSOCIATES
1170 SOUTH HOUBOLT ROAD
JOLIET, ILLINOIS 60431
(815) 744-4200
IDFPR NO. 184-001273

USER NAME = emilyre	DESIGNED -	REVISED -	
	CHECKED -	REVISED -	
PLOT SCALE = 0:2.0000 ':" / in.	DRAWN - CJH	REVISED -	
PLOT DATE = 11/6/2025	CHECKED - ELR	REVISED -	

STATE OF ILLINOIS
DEPARTMENT OF TRANSPORTATION

EXISTING SOIL BORINGS
STRUCTURE NO. 057-0163 AND 057-0164

F.A.I. RTE.	SECTION	COUNTY	TOTAL SHEETS	SHEET NO.
55	(57-3)BR	MCLEAN	126	117
		CONTRACT NO. 70F37		
	ILLINOIS	FED. AID PROJECT		

11/6/2025 1:28:28 PM

DETAIL FOR TEMPORARY RUMBLE STRIPS

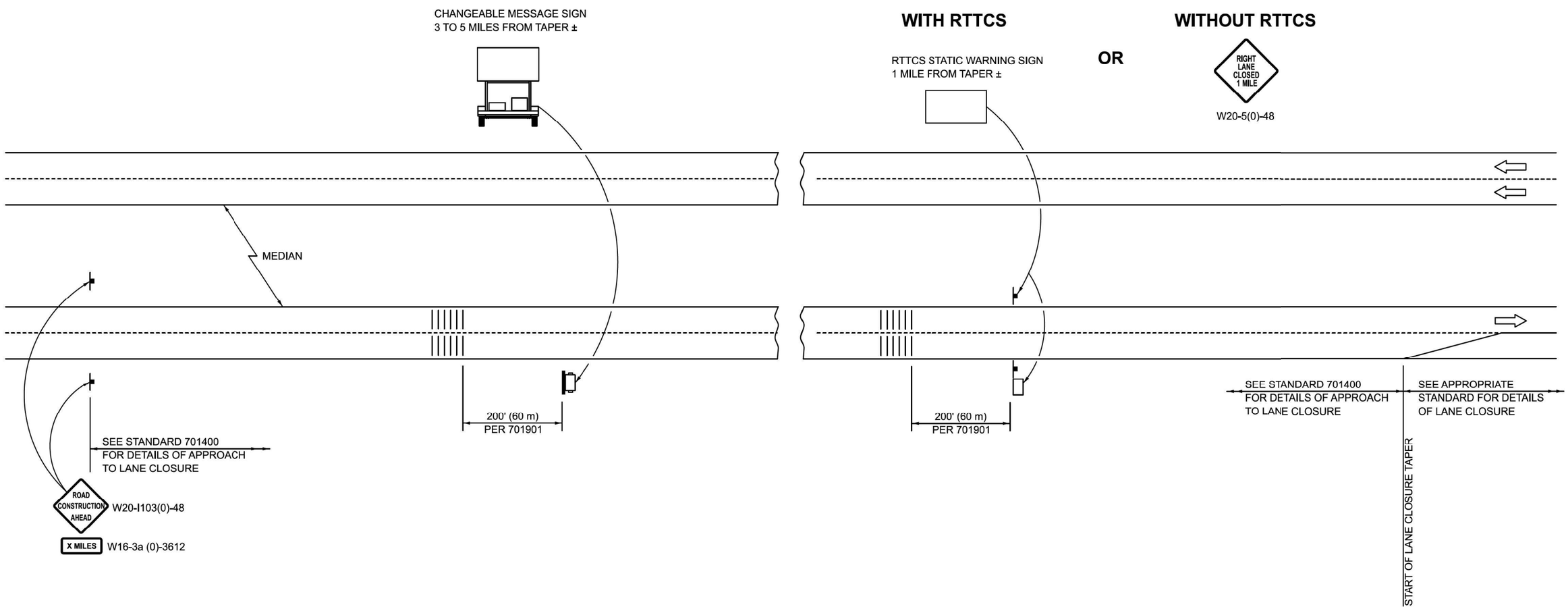

SYMBOLS

- SIGN
- TEMPORARY RUMBLE STRIPS
- CHANGEABLE MESSAGE SIGN
- RTTCS STATIC WARNING SIGN

GENERAL NOTES

REMOVE THE TEMPORARY RUMBLE STRIPS PRIOR TO THE REMOVAL OF THE ADVANCED WARNING SIGNS.

ALL DIMENSIONS ARE IN INCHES (MILLIMETERS) UNLESS OTHERWISE SHOWN.

SEE HIGHWAY STANDARD 701901 FOR TEMPORARY RUMBLE STRIP INSTALLATION.

MODEL: 70106700 [Sheet]
FILE NAME: S:\JOL\6300--639\9634612\5\Drawings\CAD\ORD-10.12\CADsheets\d570737-sht-notes-standards-index.dgn

STRAND ASSOCIATES®
1170 SOUTH HOUBOLT ROAD
JOLIET, ILLINOIS 60431
(815) 744-4200

USER NAME = jaker	DESIGNED -	REVISED -
	DRAWN -	REVISED -
	CHECKED -	REVISED -
PLOT DATE = 9/19/2025	DATE - 10/22/2025	REVISED -

STATE OF ILLINOIS
DEPARTMENT OF TRANSPORTATION

DETAIL FOR TEMPORARY RUMBLE STRIPS

SCALE: | SHEET 1 OF 1 SHEETS | STA. | TO STA.

DISTRICT 5 DETAIL NO. 70106700

F.A.I RTE.	SECTION	COUNTY	TOTAL SHEETS	SHEET NO.
55	(57-3)BR	MCLEAN	126	118

CONTRACT NO. 70F37

ILLINOIS | FED. AID PROJECT

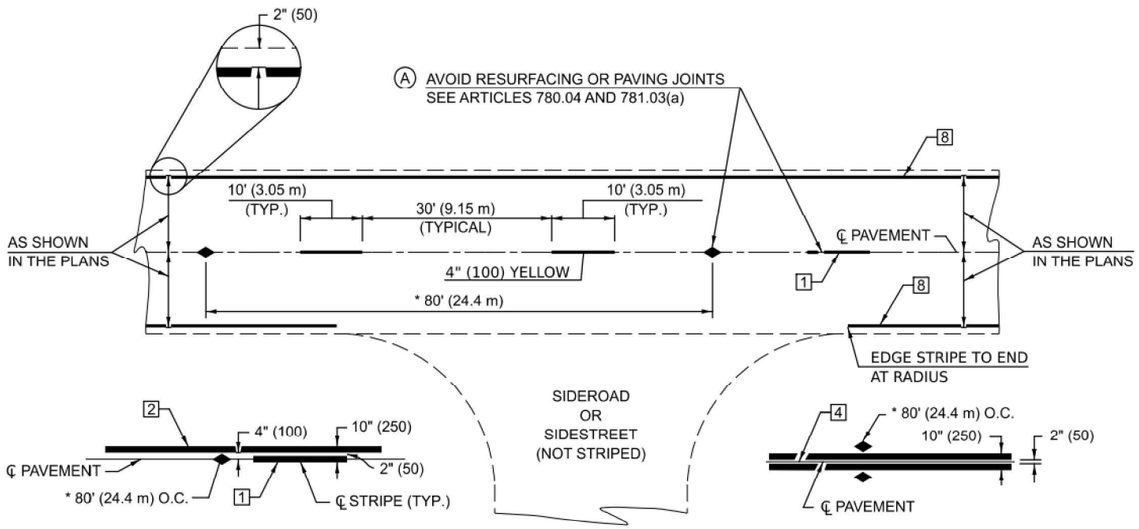

SINGLE NO PASSING

DOUBLE NO PASSING

* REDUCE TO 40' (12.2 m) O.C. ON CURVES WITH POSTED OR ADVISORY SPEEDS OF 45 mph (70 km/h) OR LESS.

TWO LANE/TWO WAY

TYPICAL PAVEMENT MARKING LENGEND

1 4" (100) SKIP-DASH (YELLOW)

2 4" (100) SOLID (YELLOW)

3 12" (300) DIAGONAL (YELLOW)

4 4" (100) DOUBLE YELLOW (NARROW)

5 RESERVED

6 RESERVED

7 4" (100) SKIP-DASH (WHITE)

8 4" (100) SOLID (WHITE)

9 12" (300) DIAGONAL (WHITE)

10 6" (150) SOLID (WHITE)

11 24" (600) STOP BAR (WHITE)

12 8" (200) SOLID (WHITE)

13 4" (100) LANE LINE EXTENSIONS (WHITE)

14 4" (100) PARKING WHITE

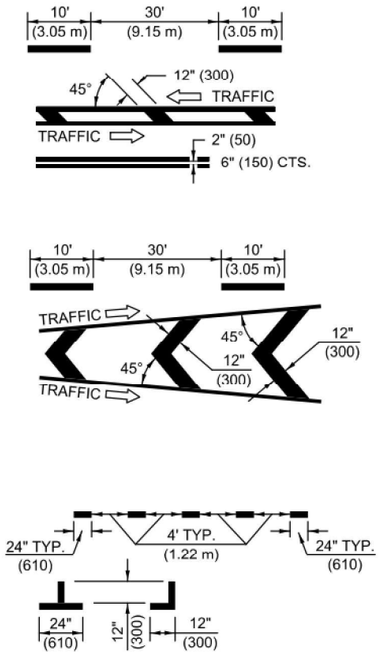

TYPICAL PAVEMENT MARKERS LENGEND

◆ TWO-WAY AMBER MARKER

▶ ONE-WAY AMBER MARKER

▷ ONE-WAY CRYSTAL MARKER

RURAL LEFT TURN

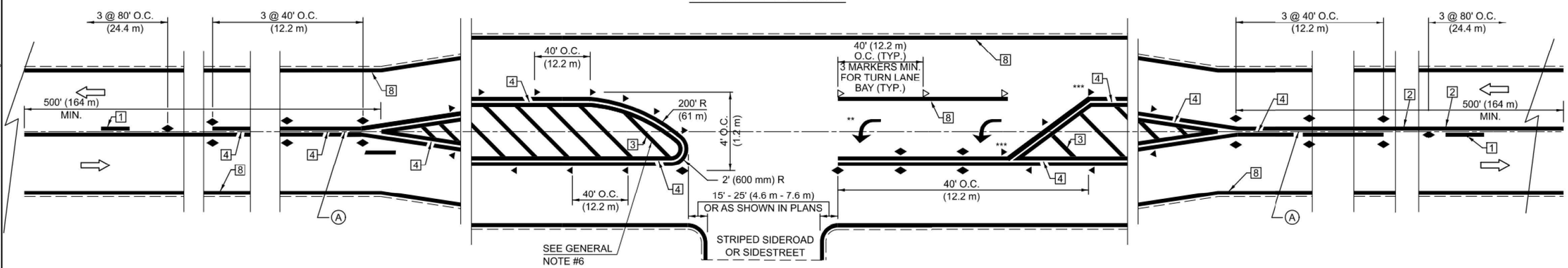

*** REDUCE SPACING IF NECESSARY TO ASSURE MARKERS AT CORNER POINTS.

** TURN ARROWS SHALL BE PLACED AS SHOWN OF SHEET #2.

Note: All dimensions are in INCHES (millimeters) unless otherwise shown.

DISTRICT 5 DETAIL NO. 7800AAAA

F.A.I RTE.	SECTION	COUNTY	TOTAL SHEETS	SHEET NO.
55	(57-3)BR	MCLEAN	126	119
		CONTRACT NO. 70F37		
		ILLINOIS	FED. AID PROJECT	

STRAND ASSOCIATES®
1170 SOUTH HOUBOLT ROAD
JOLIET, ILLINOIS 60431
(815) 744-4200

USER NAME = jaker	DESIGNED -	REVISED -	
	DRAWN -	REVISED -	
	CHECKED -	REVISED -	
PLOT DATE = 9/19/2025	DATE - 10/22/2025	REVISED -	

STATE OF ILLINOIS
DEPARTMENT OF TRANSPORTATION

PAVEMENT MARKING AND MARKERS
(RURAL & URBAN APPLICATIONS)

SCALE: SHEET 1 OF 4 SHEETS STA. TO STA.

URBAN LEFT TURN

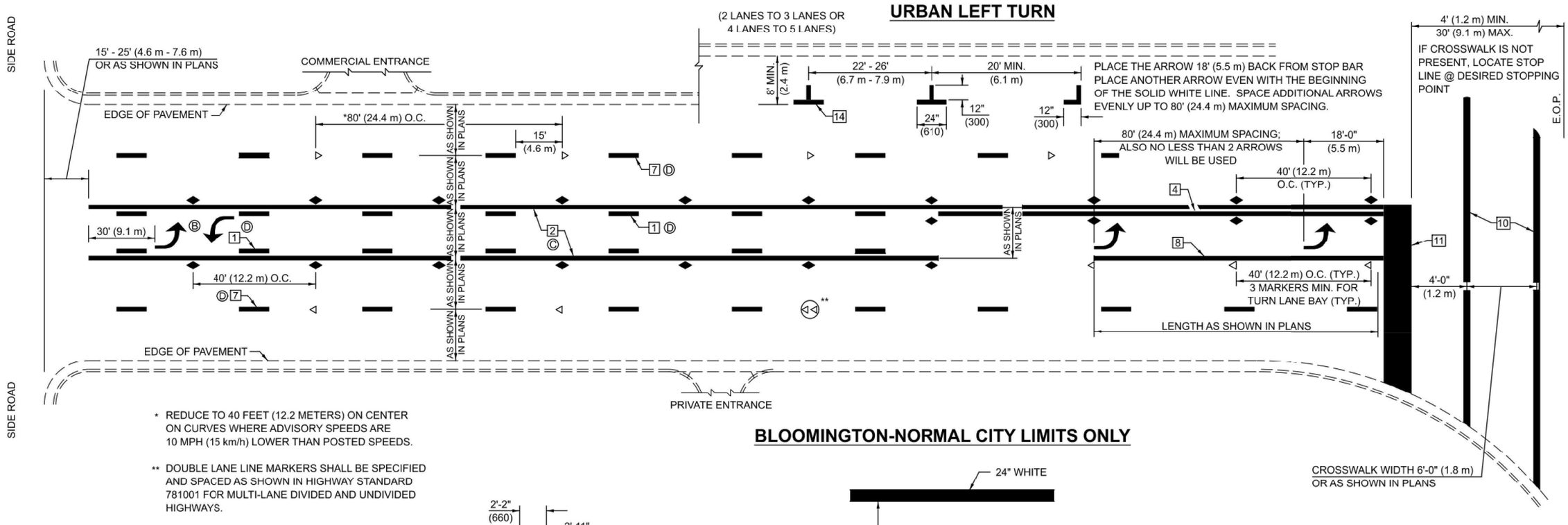

* REDUCE TO 40 FEET (12.2 METERS) ON CENTER ON CURVES WHERE ADVISORY SPEEDS ARE 10 MPH (15 km/h) LOWER THAN POSTED SPEEDS.

** DOUBLE LANE LINE MARKERS SHALL BE SPECIFIED AND SPACED AS SHOWN IN HIGHWAY STANDARD 781001 FOR MULTI-LANE DIVIDED AND UNDIVIDED HIGHWAYS.

BLOOMINGTON-NORMAL CITY LIMITS ONLY

CROSSWALK WIDTH 6'-0" (1.8 m)
OR AS SHOWN IN PLANS

GENERAL NOTES:

Ⓑ TURN ARROW PAIRS SHALL BE PLACED AT 250' (75 m) INTERVALS AND SHALL BE EVENLY SPACED BETWEEN BOTH ENDS OF THE BIDIRECTIONAL LEFT TURN LANE.

Ⓒ THE SOLID YELLOW PAVEMENT MARKINGS 2 SHOULD GENERALLY START OR END NEAR THE RADIUS POINT OF EACH STREET RETURN EXCEPT WHERE ONE OR BOTH ENDS WOULD INCLUDE STOP BARS.

Ⓓ THE SKIP-DASH PAVEMENT MARKINGS 1 OR 7 SHOULD BE CENTERED BETWEEN BOTH ENDS OF EACH CITY BLOCK AND SHALL BE PLACED SO THEY LINE UP ACROSS FROM EACH OTHER. SEE EXAMPLE ON SHEET 2 OF 3.

Ⓔ USE LARGE ARROW SIZE FOR BOTH RURAL AND URBAN LOCATIONS. (SEE LAST PAGE OF SECTION 780x FOR SYMBOLS TABLE)

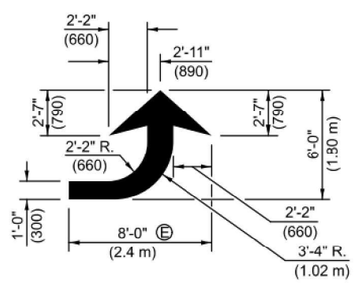

LEFT ARROW

REVERSE FOR RIGHT ARROW
AREA = 15.6 SQ. FT. (1.47 m)
(WHITE)

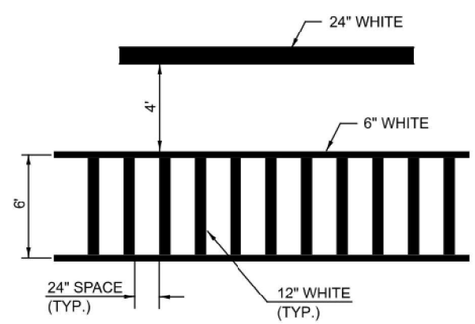

TYPICAL SPACING FOR CROSSWALKS & STOP BARS

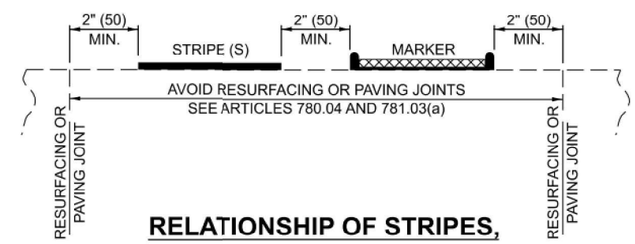

RELATIONSHIP OF STRIPES, MARKERS AND JOINTS

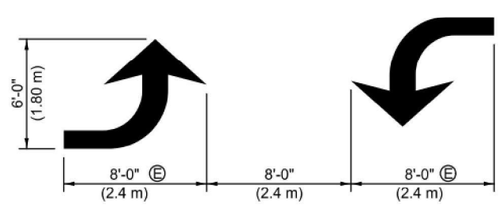

TYPICAL DOUBLE TURN ARROWS (WHITE)

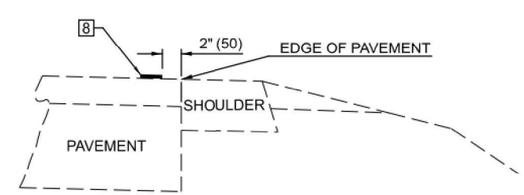

RELATIONSHIP OF EDGE LINE TO EDGE OF PAVEMENT

(SAFETY SHOULDER OR PAVED SURFACE)
SEE ARTICLE 780.04

Note: All dimensions are in INCHES (millimeters) unless otherwise shown.

DISTRICT 5 DETAIL NO. 7800AAAA

F.A.I RTE.	SECTION	COUNTY	TOTAL SHEETS	SHEET NO.
55	(57-3)BR	MCLEAN	126	120
		CONTRACT NO. 70F37		
		ILLINOIS FED. AID PROJECT		

STRAND ASSOCIATES®
1170 SOUTH HOUBOLT ROAD
JOLIET, ILLINOIS 60431
(815) 744-4200

USER NAME = jaker	DESIGNED -	REVISED -	
	DRAWN -	REVISED -	
	CHECKED -	REVISED -	
PLOT DATE = 9/19/2025	DATE - 10/22/2025	REVISED -	

STATE OF ILLINOIS
DEPARTMENT OF TRANSPORTATION

PAVEMENT MARKING AND MARKERS
(RURAL & URBAN APPLICATIONS)

SCALE: | SHEET 2 OF 4 SHEETS | STA. | TO STA.

MODEL: 7800AAAA Page 2 [Sheet]
FILE NAME: S:\JOL\6300-6399\6346\125\Drawings\CAD\ORD-10.12\CADsheets\d570f37-sht-notes-standards-index.dgn

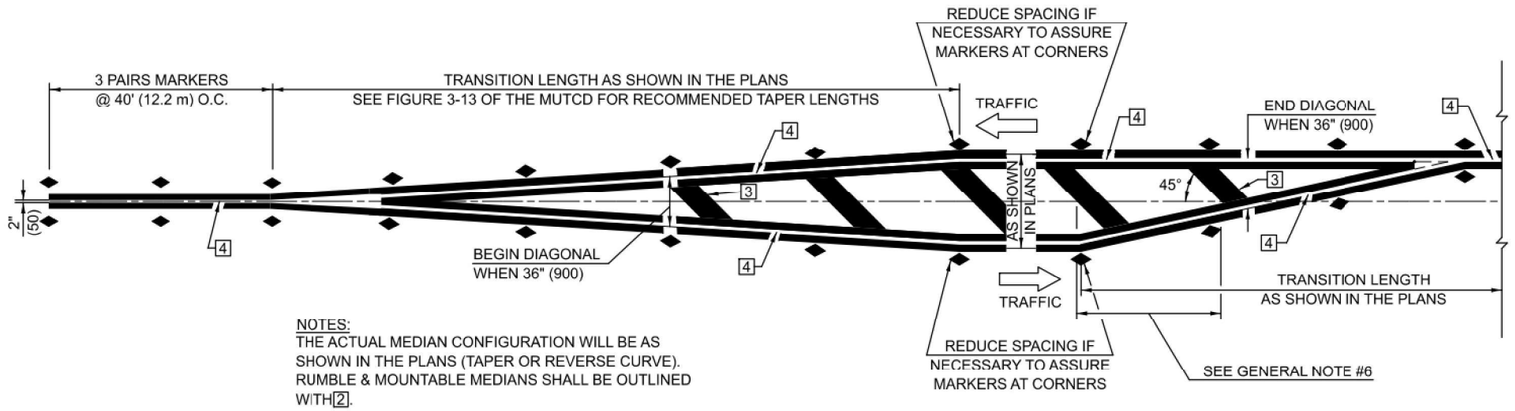

NOTES:
THE ACTUAL MEDIAN CONFIGURATION WILL BE AS SHOWN IN THE PLANS (TAPER OR REVERSE CURVE). RUMBLE & MOUNTABLE MEDIANS SHALL BE OUTLINED WITH 2.

TYPICAL MEDIAN TRANSITIONS

GENERAL NOTES

1. WHEN MEDIANS ARE PRESENT, PAVEMENT MARKINGS ARE TO BE PLACED ADJACENT TO MEDIANS.
2. SOME OF THE INFORMATION INCLUDED WITH THIS DETAIL MAY NOT BE APPLICABLE TO THIS IMPROVEMENT.
3. PAVEMENT MARKINGS ARE TO BE EXTENDED THROUGH OMISSIONS WHEN APPLICABLE.
4. A STRIPING KEY IS AVAILABLE ELSEWHERE AND SHALL BE SHOWN WHERE THE QUANTITIES ARE LISTED.
5. FINAL PAVEMENT MARKINGS SHALL BE IN PLACE PRIOR TO PLACING ANY RAISED REFLECTIVE PAVEMENT MARKERS.
6. THE FOLLOWING CRITERIA SHALL BE USED FOR SELECTING THE DIAGONAL PAVEMENT MARKING SPACING,
   <30 MPH USE 15' (<50 km/h USE 4.5 m)
   30-45 MPH USE 20' (50-75 km/h USE 6.0 m)
   >45 MPH USE 30' (>75 km/h USE 9.0 m)

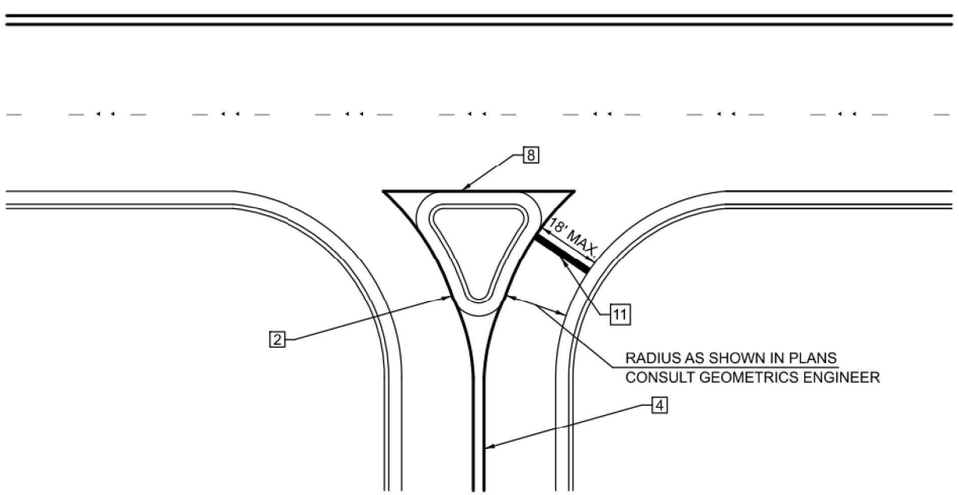

RIGHT IN - RIGHT OUT ACCESS

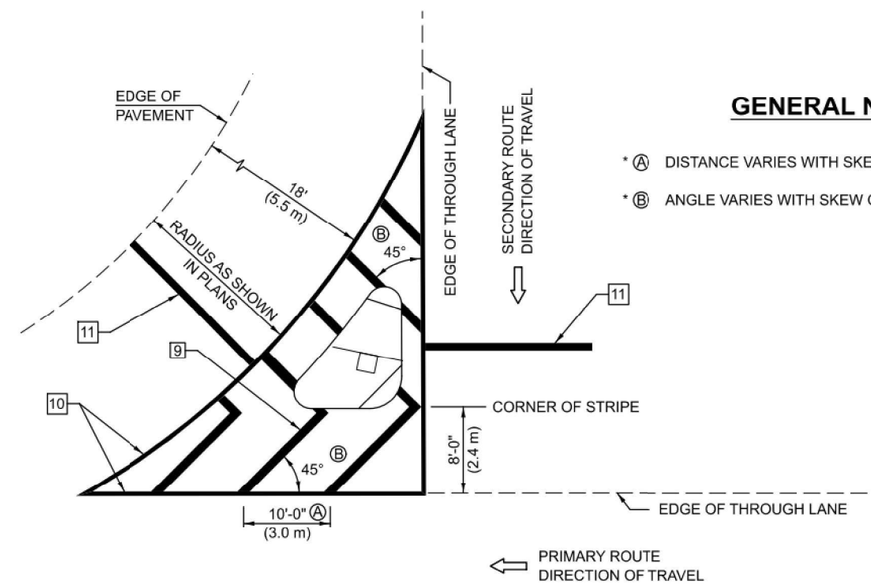

GENERAL NOTES

* Ⓐ DISTANCE VARIES WITH SKEW OF INTERSECTION.
* Ⓑ ANGLE VARIES WITH SKEW OF INTERSECTION.

ISLAND

* FOR RIGHT TURN LANE AND ISLAND STRIPING CONSULT GEOMETRICS ENGINEER.

Note: All dimensions are in INCHES (millimeters) unless otherwise shown.

MODEL: 7800AAAA Page 3 [Sheet]
FILE NAME: S:\JOL\6300-6399\6346\125\Drawings\CAD\ORD-10.12\CADsheets\d57037-sht-notes-standards-index.dgn

STRAND ASSOCIATES®
1170 SOUTH HOUBOLT ROAD
JOLIET, ILLINOIS 60431
(815) 744-4200

USER NAME = jaker	DESIGNED -	REVISED -	
	DRAWN -	REVISED -	
	CHECKED -	REVISED -	
PLOT DATE = 9/19/2025	DATE - 10/22/2025	REVISED -	

STATE OF ILLINOIS
DEPARTMENT OF TRANSPORTATION

PAVEMENT MARKING AND MARKERS
(RURAL & URBAN APPLICATIONS)

SCALE: | SHEET 3 OF 4 SHEETS | STA. TO STA.

DISTRICT 5 DETAIL NO. 7800AAAA

F.A.I RTE.	SECTION	COUNTY	TOTAL SHEETS	SHEET NO.
55	(57-3)BR	MCLEAN	126	121

CONTRACT NO. 70F37

ILLINOIS | FED. AID PROJECT

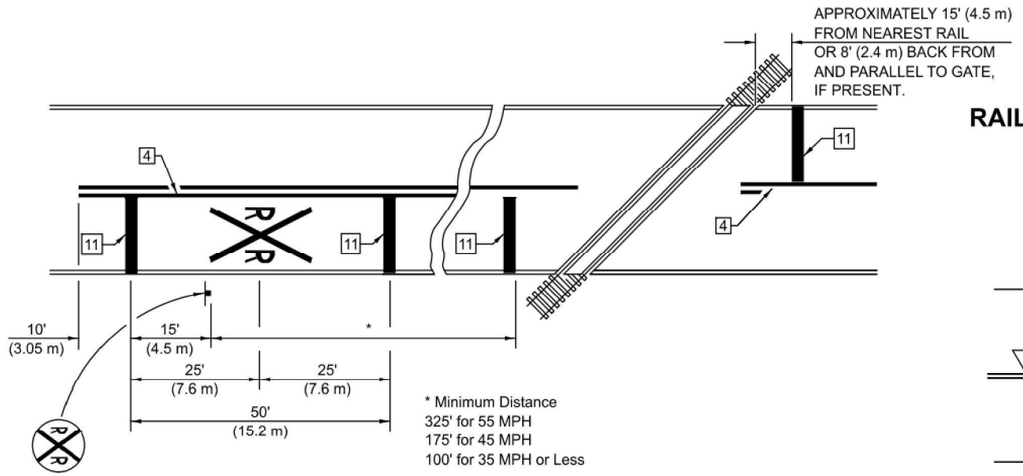

PAVEMENT MARKINGS AT RAILROAD-HIGHWAY GRADE CROSSING

RAILROAD CROSSING WITH INTERCONNECT ONLY

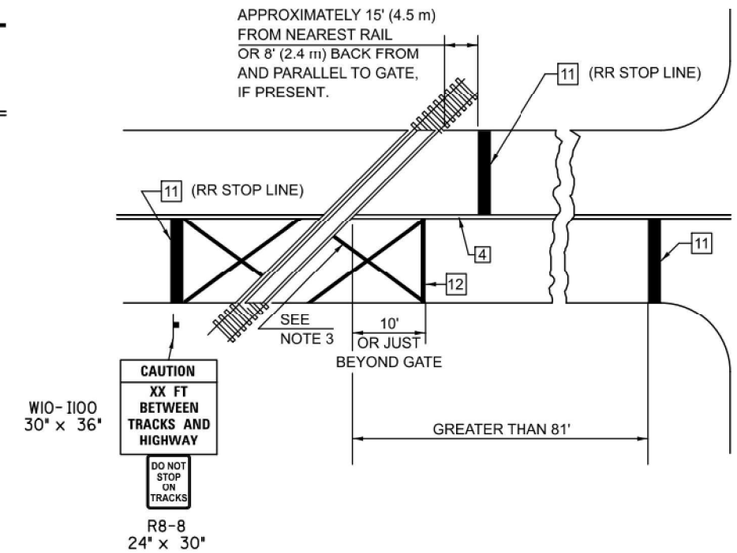

RAILROAD CROSSING WITH INTERCONNECT AND PRE-SIGNALS

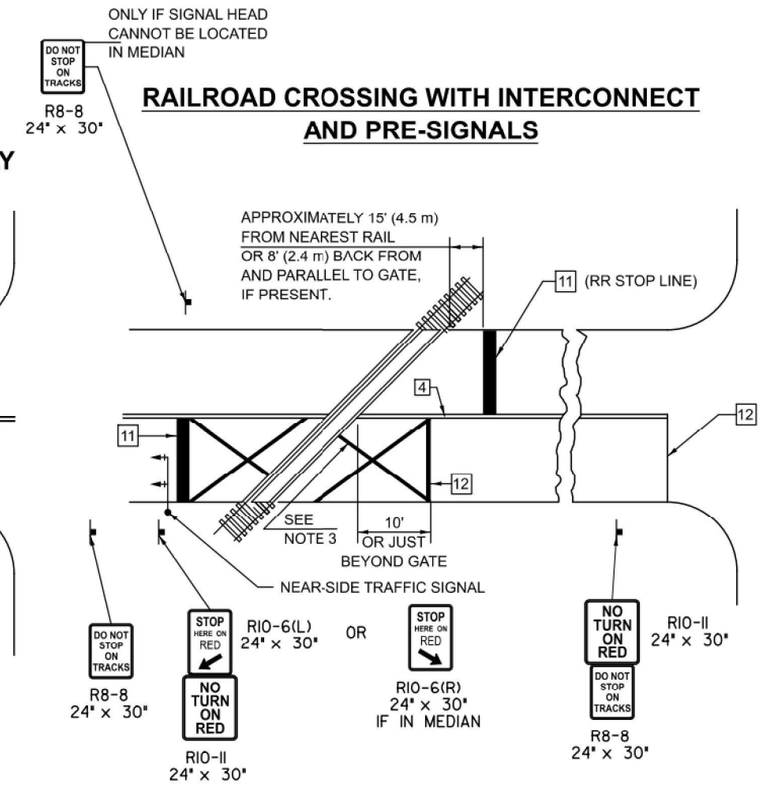

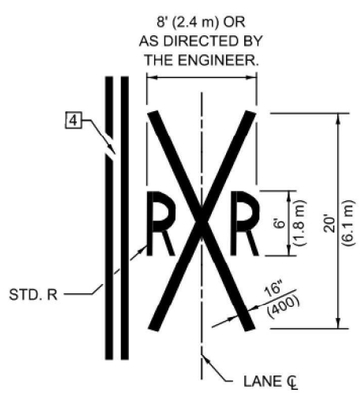

GENERAL NOTES

1. SUPPLEMENTAL PAVEMENT MARKINGS TO BE INSTALLED ONLY ON APPROACHES TO INTERSECTIONS CONTROLLED BY TRAFFIC SIGNALS WHICH ARE INTERCONNECTED WITH THE RAILROAD WARNING SIGNALS.

2. EXTEND PAVEMENT MARKINGS TO THE INTERSECTION ONLY WHERE NEAR-SIDE TRAFFIC SIGNALS ARE USED.

3. 6" WHITE PAVEMENT MARKINGS AT 45° TO PAVEMENT, 8' CENTER TO CENTER.

4. XX DISTANCE TO BE SHOWN ON SIGN MEASURED FROM A POINT 6 FEET FROM THE RAIL CLOSEST TO THE INTERSECTION OR FROM THE CLOSEST POINT ALONG THE EXIT GATE IF PRESENT OVER THE ROADWAY WHEN IN THE LOWERED POSITION TO THE STOP BAR OR CROSSWALK, WHICH EVER IS CLOSEST, ROUNDED DOWN TO NEAREST 5 FEET. WHERE THERE IS NO STOP LINE, MEASURE TO POINT WHERE DRIVER HAS A VIEW OF APPROACHING TRAFFIC.

5. THE CLEARANCE SIGN IS ALSO TO BE USED AS AN INTERIM MEASURE AT LOCATIONS WITH INTERCONNECTED INTERSECTION TRAFFIC SIGNALS WHERE IT IS PLANNED TO CHANGE THEM TO NEAR-SIDE SIGNALS AT A FUTURE TIME. IN THIS CASE, THE DISTANCE TO BE SHOWN ON THE SIGN IS MEASURED FROM THE EDGE OF THE STRIPED-OUT AREA INSTEAD OF 6 FEET FROM THE RAIL. THE SIGN IS TO BE REMOVED WHEN THE NEAR-SIDE SIGNALS ARE INSTALLED AND THE PAVEMENT MARKINGS EXTENDED TO THE INTERSECTION.

SUPPLEMENT PAVEMENT MARKING TREATMENT FOR RAILROAD-HIGHWAY GRADE CROSSING

ALTERNATE SIGNS

R10-6a(L) 24" x 30" R10-6a(R) 24" x 30"

NOTES

THE TRAVERSE SPREAD OF THE "X" MAY VARY ACCORDING TO LANE WIDTH.

ON MULTI-LANE ROADS, THE STOP LINES SHALL EXTEND ACROSS ALL APPROACH LANES AND SEPARATE RXR SYMBOLS SHALL BE PLACED ADJACENT TO EACH OTHER IN EACH LANE.

WHEN THE PAVEMENT MARKING SYMBOL IS USED, A PORTION OF THE SYMBOL SHOULD BE LOCATED DIRECTLY ADJACENT TO THE ADVANCE WARNING SIGN (W10-1) AS PLACED BY TABLE II-1, CONDITION B OF THE MUTCD.

Note: All dimensions are in INCHES (millimeters) unless otherwise shown.

DISTRICT 5 DETAIL NO. 7800AAAA

F.A.I RTE.	SECTION	COUNTY	TOTAL SHEETS	SHEET NO.
55	(57-3)BR	MCLEAN	126	122
		CONTRACT NO. 70F37		
		ILLINOIS FED. AID PROJECT		

STRAND ASSOCIATES®
1170 SOUTH HOUBOLT ROAD
JOLIET, ILLINOIS 60431
(815) 744-4200

USER NAME = jaker	DESIGNED -	REVISED -
	DRAWN -	REVISED -
	CHECKED -	REVISED -
PLOT DATE = 9/19/2025	DATE - 10/22/2025	REVISED -

STATE OF ILLINOIS
DEPARTMENT OF TRANSPORTATION

PAVEMENT MARKING AND MARKERS
(RURAL & URBAN APPLICATION)

SCALE: | SHEET 4 OF 4 SHEETS | STA. TO STA.

MODEL: 7800AAAA Page 4 [Sheet]
FILE NAME: S:\JOL\6300-6399\6346\125\Drawings\CAD\ORD-10.12\CADsheets\d570137-sht-notes-standards-index.dgn

CENTERLINE INTERSTATE OR MULTI-LANE TWO WAY DIVIDED HIGHWAY

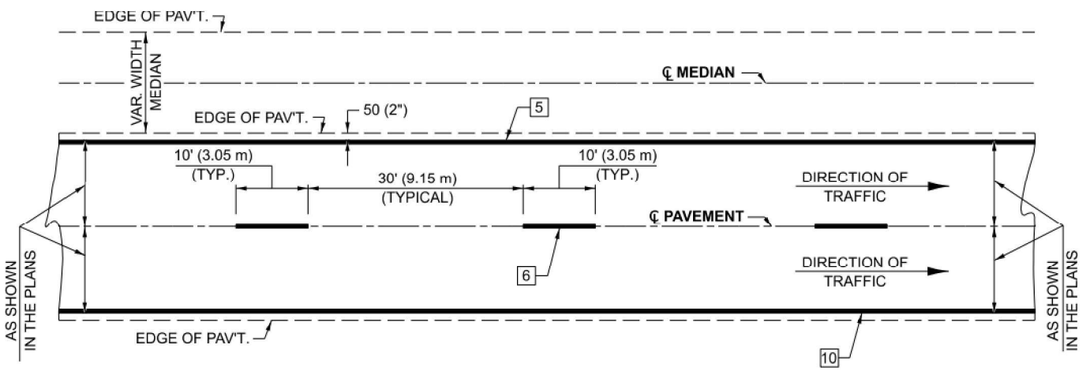

NOTE: PAVEMENT MARKINGS ARE TO BE EXTENDED THROUGH OMISSIONS WHEN APPLICABLE.

NOTE: SEE ARTICLES 780.04 & 781.03 FOR LOCATION OF STRIPES AND MARKERS RELATIVE TO EDGES OR JOINTS.

FOR RAISED REFLECTIVE PAVEMENT MARKERS, REFER TO STANDARD 781001.

TYPICAL EXIT RAMP TERMINAL

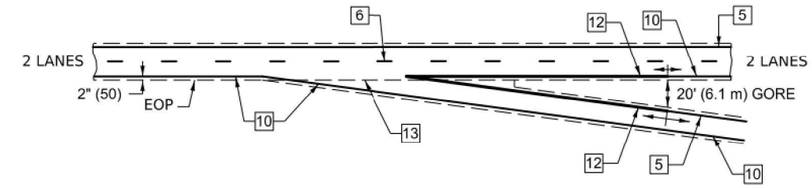

EXIT RAMP TERMINAL with EXCLUSIVE (auxiliary) LANE

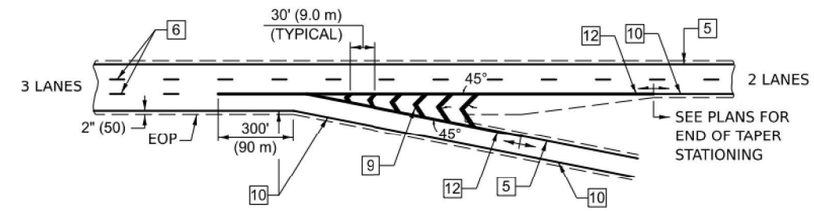

TYPICAL PAVEMENT MARKING LEGEND

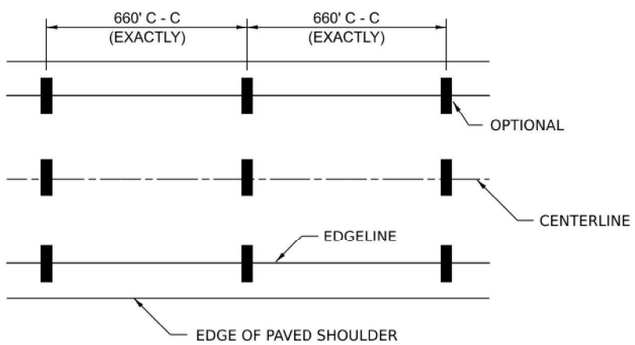

IT WILL BE NECESSARY TO HAVE A REPRESENTATIVE OF THE STATE POLICE PRESENT SO THAT THE ACCURACY OF MEASUREMENT CAN BE ATTESTED TO IN COURT.

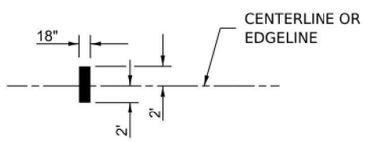

1 4" (100) SKIP-DASH (YELLOW)

2 4" (100) SOLID (YELLOW)

3 12" (300) DIAGONAL (YELLOW)

4 4" (100) DOUBLE YELLOW (NARROW)

5 6" (150) SOLID (YELLOW)

6 6" (150) SKIP-DASH (WHITE)

7 4" (100) SKIP-DASH (WHITE)

8 4" (100) SOLID (WHITE)

9 12" (300) DIAGONAL (WHITE)

10 6" (150) SOLID (WHITE)

11 24" (600) STOP BAR (WHITE)

12 8" (200) SOLID (WHITE)

13 6" (150) LANE LINE EXTENSIONS (WHITE)

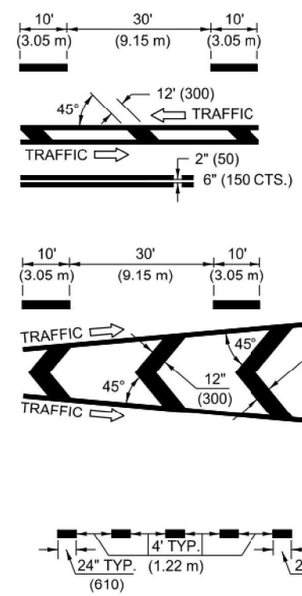

TYPICAL ENTRANCE RAMP TERMINAL

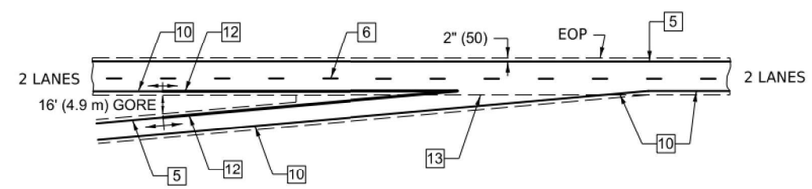

ENTRANCE RAMP TERMINAL with EXCLUSIVE LANE

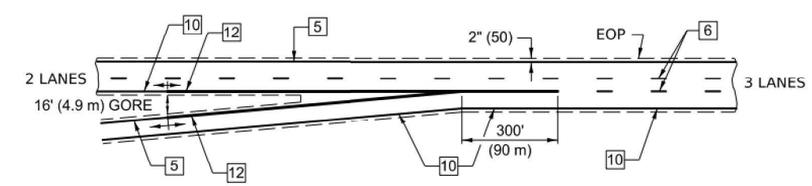

AERIAL SPEED CHECK ZONES

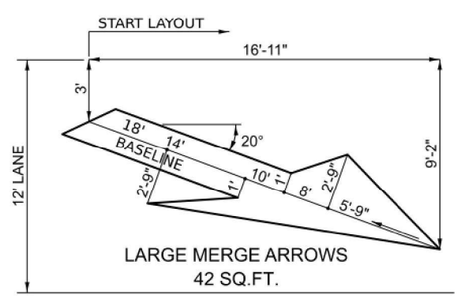

Note: All dimensions are in INCHES (millimeters) unless otherwise shown.

MODEL: 7800BBBB [Sheet]
FILE NAME: S:\JOL\6300--6399\6346\125\Drawings\CAD\ORD-10.12\CADsheets\d570f37-sht-notes-standards-index.dgn

STRAND ASSOCIATES®
1170 SOUTH HOUBOLT ROAD
JOLIET, ILLINOIS 60431
(815) 744-4200

USER NAME = jaker	DESIGNED -	REVISED -
	DRAWN -	REVISED -
	CHECKED -	REVISED -
PLOT DATE = 9/19/2025	DATE - 10/22/2025	REVISED -

STATE OF ILLINOIS
DEPARTMENT OF TRANSPORTATION

PAVEMENT MARKING
(INTERSTATE & MULTI-LANE APPLICATIONS)

SCALE: | SHEET 1 OF 1 SHEETS | STA. TO STA.

DISTRICT 5 DETAIL NO. 7800BBBB

F.A.I RTE.	SECTION	COUNTY	TOTAL SHEETS	SHEET NO.
55	(57-3)BR	MCLEAN	126	123

CONTRACT NO. 70F37

ILLINOIS | FED. AID PROJECT

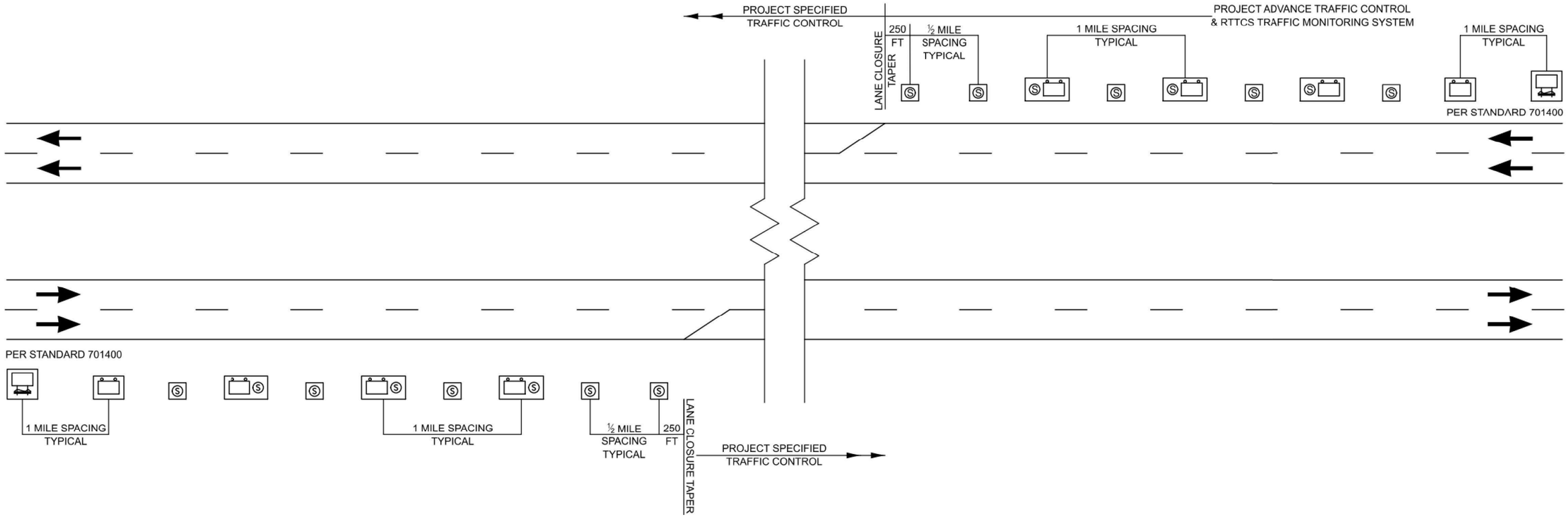

LEGEND

REAL-TIME TRAFFIC CONTROL WARNING SIGN
PROJECT SIGN SHALL BE A 48" X 96" (1200MM X 2400MM)
SIGN THAT SAYS:
"STOPPED TRAFFIC NEXT MILE WHEN FLASHING".

STOPPED TRAFFIC
NEXT MILE
WHEN FLASHING

SINGLE PORTABLE CHANGEABLE MESSAGE SIGN PLACED 1 MILE
IN ADVANCE OF THE REAL-TIME TRAFFIC CONTROL WARNING SIGN.
IT SHALL READ: "RIGHT/LEFT LANE CLOSED // X MILES AHEAD"
THIS PORTABLE CHANGEABLE MESSAGE SIGN IS INCLUDED IN STANDARD 701400

(S) REAL-TIME TRAFFIC MONITORING SENSOR UNIT

NOTES:

1. THE NUMBER OF REAL-TIME TRAFFIC CONTROL WARNINGS SIGNS MAY BE CHANGED AS DIRECTED BY THE ENGINEER. RELOCATION OF REAL-TIME TRAFFIC CONTROL STATIC WARNING SIGNS IS INCLUDED IN THE REAL-TIME TRAFFIC CONTROL PAY ITEMS.
2. REAL-TIME TRAFFIC CONTROL MONITORING SENSOR UNITS SPACED APPROXIMATELY EVERY 1/2 MILE AND REAL-TIME TRAFFIC CONTROL WARNING SIGNS SPACED EVERY 1 MILE OR AS DIRECTED BY THE ENGINEER.
3. THE FIRST REAL-TIME TRAFFIC MONITORING SENSORS UNIT IS TO BE PLACED 250 FOOT UPSTREAM OF THE TAPER.
4. THE SECOND REAL-TIME SPEED TRAFFIC MONITORING SENSOR UNIT IS TO BE PLACED 250 FOOT IN ADVANCE OF THE RIGHT LANE/LEFT LANE CLOSED 1/2 MILE SIGN (STD. 701400).
5. THE FIRST REAL-TIME TRAFFIC CONTROL WARNINGS SIGN SHOULD BE PLACED 500 FOOT IN ADVANCE OF THE RIGHT/LEFT LANE CLOSED 1 MILE SIGN (STD. 701400)
6. THE NUMBER OF RTTCS DEVICES MAY BE REDUCED BASED ON THE LOCATION OF THE PORTABLE CHANGEABLE MESSAGE SIGN PER (STD. 701400) AS DIRECTED BY THE ENGINEER.

Note: All dimensions are in INCHES (millimeters) unless otherwise shown.

DISTRICT 5 DETAIL NO. X032AAAA

MODEL: X032AAAA REAL TIME TRAFFIC CONTROL SYSTEM [Sheet]
FILE NAME: S:\JOL\6300--6399\6346\125\Drawings\CAD\ORD-10.12\CADsheets\d570f37-sht-notes-standards-index.dgn

STRAND ASSOCIATES
1170 SOUTH HOUBOLT ROAD
JOLIET, ILLINOIS 60431
(815) 744-4200

USER NAME = jaker	DESIGNED -	REVISED -	
	DRAWN -	REVISED -	
	CHECKED -	REVISED -	
PLOT DATE = 9/19/2025	DATE - 10/22/2025	REVISED -	

STATE OF ILLINOIS
DEPARTMENT OF TRANSPORTATION

REAL-TIME TRAFFIC CONTROL SYSTEM

SCALE: SHEET 1 OF 1 SHEETS STA. TO STA.

F.A.I RTE.	SECTION	COUNTY	TOTAL SHEETS	SHEET NO.
55	(57-3)BR	MCLEAN	126	124

CONTRACT NO. 70F37

ILLINOIS | FED. AID PROJECT

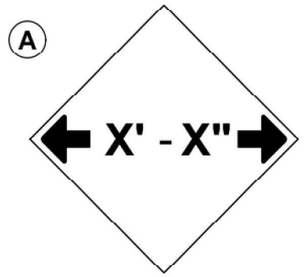

W12-2(0)-48"x48"(1200x1200)

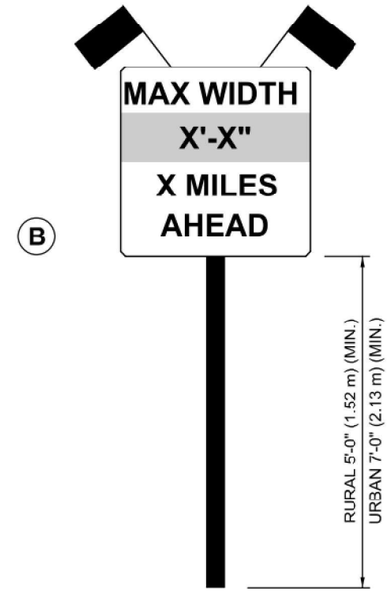

SIGN PANEL, TYPE II

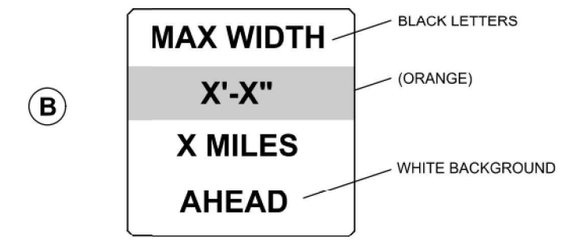

W12-I103(O)-48"x48"(1200x1200)
"D" LETTERS/NUMBERS

SIGN (A) 2 SIGNS - W12-2(O)-48"x48"(1200x1200) ARE TO BE PLACED AS SHOWN IN THE PLANS OR AS DIRECTED BY THE ENGINEER.

SIGN (B) 2 SIGNS - (SIGN PANEL, TYPE II) AS SHOWN ARE TO BE PLACED AS SHOWN IN THE PLANS OR AS DIRECTED BY THE ENGINEER.

GENERAL NOTES

1. ALL TRAFFIC CONTROL DEVICES SHALL BE FURNISHED, ERECTED AND MAINTAINED BY THE CONTRACTOR.
2. ALL (B) SIGNS SHALL HAVE FLAGS INSTALLED UNLESS OTHERWISE DIRECTED.
3. LOCATIONS OF TRAFFIC CONTROL DEVICES MAY BE ADJUSTED BY THE ENGINEER.
4. ALL TRAFFIC CONTROL SHOWN ON THIS SHEET SHALL BE PAID FOR AT THE CONTRACT LUMP SUM PRICE FOR WIDTH RESTRICTION SIGNING.
5. ALL SIGNS SHALL BE POST MOUNTED UNLESS OTHERWISE DIRECTED.
6. ALL SIGNS SHOWN ORANGE (O) SHALL BE FLUORESCENT ORANGE.
7. ALL SIGNS SHOWN SHALL CONSIST OF THE CURRENT RETROREFLECTIVE SHEETING REQUIREMENTS AS OUTLINED IN SECTION 1106.01 OF THE STANDARD SPECIFICATIONS BOOK.

Note: All dimensions are in INCHES (millimeters) unless otherwise shown.

DISTRICT 5 DETAIL NO. X7200201

F.A.I RTE.	SECTION	COUNTY	TOTAL SHEETS	SHEET NO.
55	(57-3)BR	MCLEAN	126	125
		CONTRACT NO. 70F37		
	ILLINOIS	FED. AID PROJECT		

STRAND ASSOCIATES®
1170 SOUTH HOUBOLT ROAD
JOLIET, ILLINOIS 60431
(815) 744-4200

USER NAME = jaker	DESIGNED -	REVISED -
	DRAWN -	REVISED -
	CHECKED -	REVISED -
PLOT DATE = 9/19/2025	DATE - 10/22/2025	REVISED -

STATE OF ILLINOIS
DEPARTMENT OF TRANSPORTATION

WIDTH RESTRICTION SIGNING

SCALE: | SHEET 1 OF 1 SHEETS | STA. | TO STA.

MODEL: X7200201 [Sheet]
FILE NAME: S:\JOL\6300-6399\6346\125\Drawings\CAD\ORD-10.12\CADsheets\d570f37-sht-notes-standards-index.dgn

CONTRACT NUMBER 70F37 WIDTH RESTRICTION SIGNING PLAN

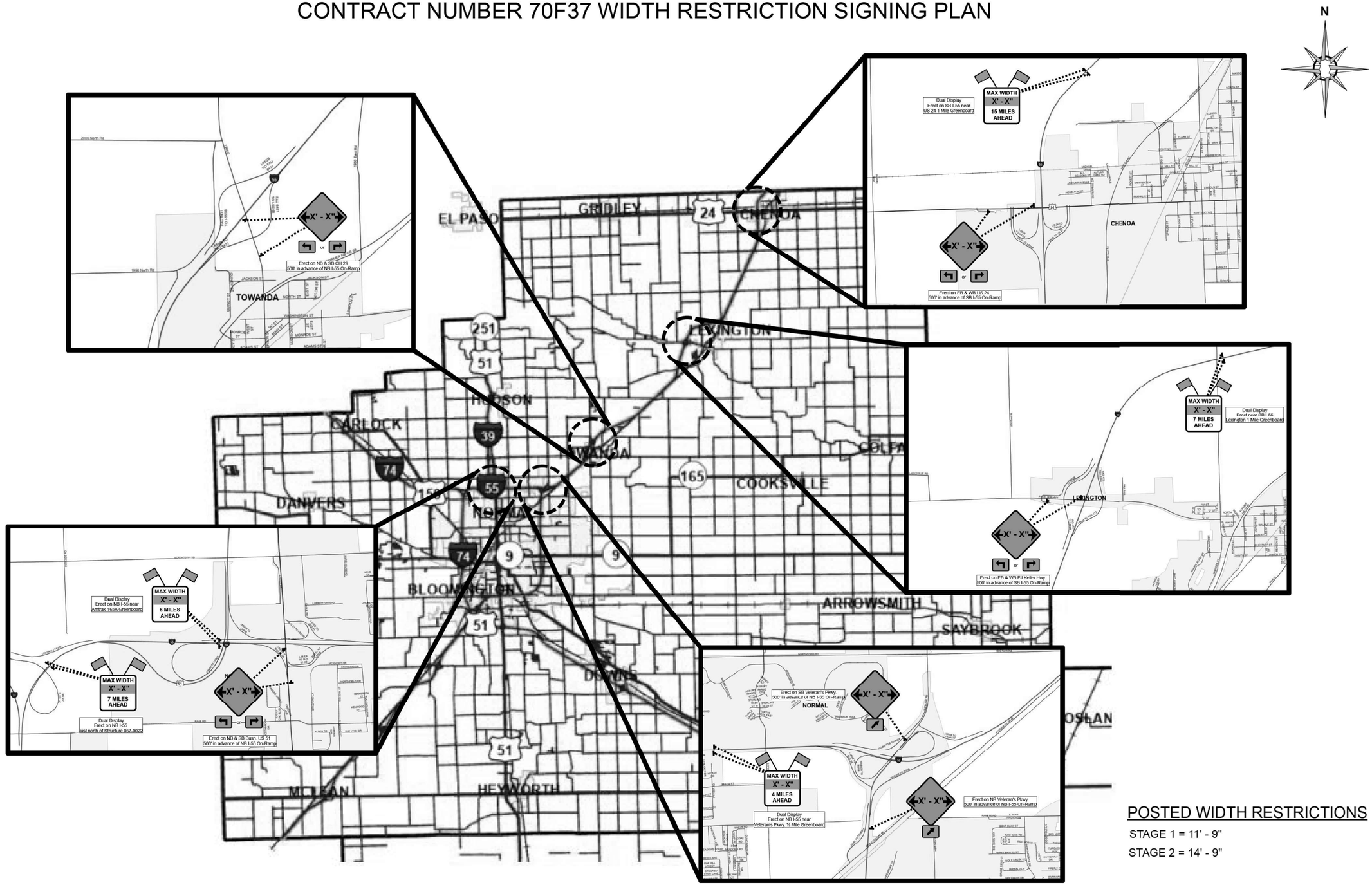

POSTED WIDTH RESTRICTIONS

STAGE 1 = 11' - 9"

STAGE 2 = 14' - 9"

X70200201 [Sheet]
DS#####-Sht-Detail_X7200201.dgn

AMES Engineering, Inc. CONSULTING ENGINEERS 6330 Belmont Road, Suite 4B Downers Grove, IL 60516	USER NAME = MSomer	DESIGNED - JAR	REVISED - 05/08	STATE OF ILLINOIS DEPARTMENT OF TRANSPORTATION	WIDTH RESTRICTION SIGNING	F.A.I RTE.	SECTION	COUNTY	TOTAL SHEETS	SHEET NO.
		DRAWN - MA	REVISED - 10/08 KJT			55	(57-3) BR	McLEAN	126	126
		CHECKED - AS	REVISED - 07/09 KJT					CONTRACT NO. 70F37		
	PLOT DATE =10/22/2025	DATE - 05-08-25	REVISED - 03/11 KJT		SCALE: SHEET 1 OF 1 SHEETS STA. TO STA.		ILLINOIS	FED. AID PROJECT		