02-27-2026 LETTING ITEM 046

F.A.P RTE.	SECTION	COUNTY	TOTAL SHEETS	SHEET NO.
713	119RS-4, 120RS-5,CLV	SCHUYLER	56*	1
	ILLINOIS	CONTRACT NO. 72762		

* 56 + 1 = 57 TOTAL SHEETS

STATE OF ILLINOIS
DEPARTMENT OF TRANSPORTATION

D-96-011-25

FOR INDEX OF SHEETS, SEE SHEET NO. 2

PROPOSED HIGHWAY PLANS

FAP ROUTE 713 (ILL 101)
SECTION 119RS-4, 120RS-5,CLV
PROJECT STP-HBB6(479)
STANDARD OVERLAY, CULVERT REHABILITATION
SCHUYLER COUNTY

C-96-034-25

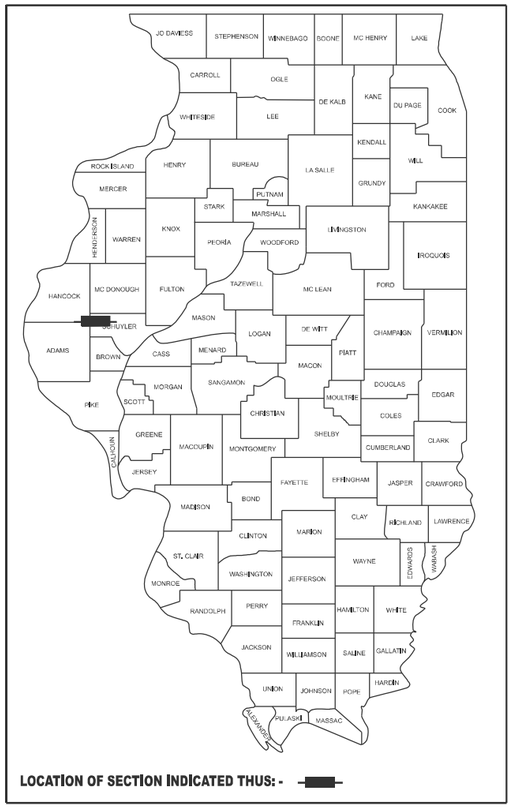

LOCATION OF SECTION INDICATED THUS: -

ROADWAY CLASSIFICATION
MINOR ARTERIAL

AVERAGE DAILY TRAFFIC YEAR 2023

COUNTY LINE TO TOWER ROAD

ADT:675 (2023) MU=10.37%, SU=5.93%, PV=83.70%

TOWER ROAD TO IL 99

ADT:400 (2023) MU=12.50%, SU=3.25%, PV=84.25%

IL 99 TO CENTER RIDGE ROAD

ADT:400 (2023) MU=5.0%, SU=3.50%, PV=91.50%

CENTER RIDGE ROAD TO MULLEY ROAD

ADT:300 (2023) MU=5.0%, SU=6.33%, PV=88.76%

100' 200' 300' — 1"= 100'
0 10' 20' 30' — 1"= 10'
0 50' 100' — 1"= 50'
0 50' 100' — 1"= 40'
0 50' 100' — 1"= 30'
0 50' 100' — 1"= 20'

FULL SIZE PLANS HAVE BEEN PREPARED USING STANDARD ENGINEERING SCALES. REDUCED SIZED PLANS WILL NOT CONFORM TO STANDARD SCALES. IN MAKING MEASUREMENTS ON REDUCED PLANS, THE ABOVE SCALES MAY BE USED.

J.U.L.I.E.
JOINT UTILITY LOCATION INFORMATION FOR EXCAVATION
1-800-892-0123
OR 811

STATION EQUATION:
STATION 342+05.42 BK =
STATION 342+00.00 AH

BRIDGE OMISSION
STATION 556+43.31 TO
STATION 562+31.70

CURLVERT REHABILITATION
STATION 586+06.00
SN 085-2013

END PROJECT
STATION 730+41.13

BRIDGE OMISSION
STATION 141+95.12 TO
STATION 144+04.67

BEGIN PROJECT
STATION 120+16.54

BRIDGE OMISSION
STATION 643+93.62 TO
STATION 644+56.43

STATION EQUATION:
STATION 357+99.95 BK=
STATION 358+16.96 AH

STATION EQUATION:
STATION 533+31.46 BK=
STATION 528+24.87 AH

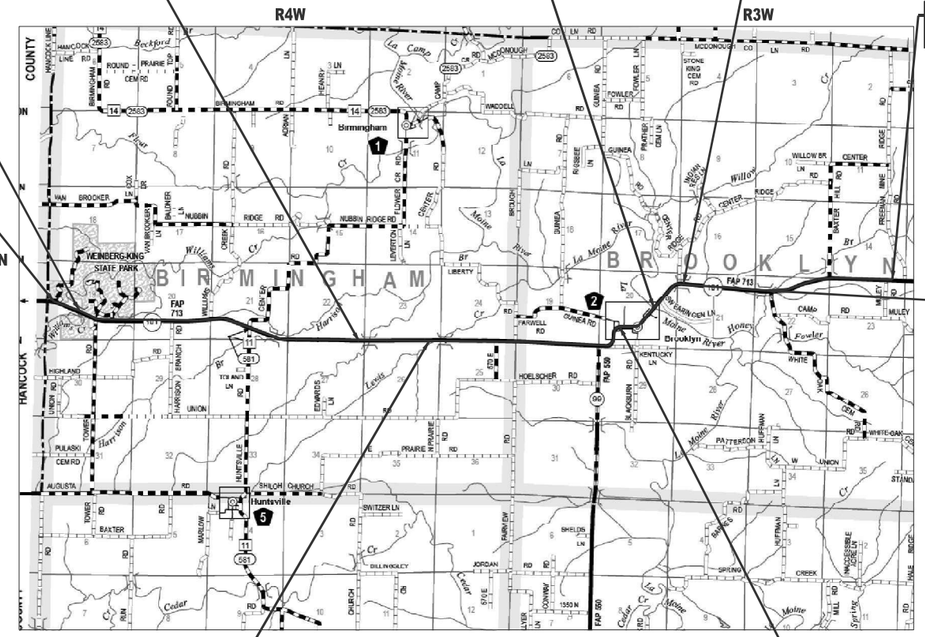

GROSS LENGTH = 61,512 FT. = 11.65 MILE

NET LENGTH = 60,651 FT. = 11.49 MILE

STATE OF ILLINOIS
DEPARTMENT OF TRANSPORTATION

SUBMITTED December 5, 2025
Teresa C. Price
REGIONAL ENGINEER

January 23, 2026
ENGINEER OF DESIGN AND ENVIRONMENT

January 23, 2026
DIRECTOR OF HIGHWAYS PROJECT IMPLEMENTATION

PROJECT ENGINEER BRIAN LANINGHAM 217-782-6990
PROJECT MANAGER MICHAEL WHITLING 217-524-0239

CONTRACT NO. 72762

PRINTED BY THE AUTHORITY
OF THE STATE OF ILLINOIS

REV - MS

INDEX OF SHEETS

HIGHWAY STANDARDS

NO.	DESCRIPTION
000001 - 09	STANDARD SYMBOLS, ABBREVIATION AND PATTERNS
001006	DECIMAL OF AN INCH AND OF A FOOT
515001 - 04	NAME PLATES FOR BRIDGES
601101 - 02	CONCRETE HEADWALS FOR PIPE DRAINS
606101 - 05	TYPE A GUTTER (INLET, OUTLET & ENTRANCE)
630001 - 13	STEEL PLATE BEAM GUARDRAIL
630301 - 09	SHOULDER WIDENING FOR TYPE 1 (SPECIAL) GUARDRAIL TERMINALS
631032 - 10	TRAFFIC BARRIER TERMINAL, TYPE 6 A
701001 - 02	OFF-ROAD OPERATIONS, 2L, 2W, MORE THAN 15' (4.5M) AWAY
701006 - 05	OFF-ROAD OPERATIONS, 2L, 2W, 15' (4.5 M) TO 24" (600 MM) FROM PAVEMENT EDGE
701201 - 05	LANE CLOSURE, 2L, 2W, DAY ONLY, FOR SPEEDS ≥ 45 MPH
701301 - 04	LANE CLOSURE, 2L, 2W, SHORT TERM OPERATIONS
701306 - 04	LANE CLOSURE, 2L, 2W, SLOW MOVING OPERATIONS DAY ONLY, FOR SPEEDS ≥45 MPH
701311 - 03	LANE CLOSURE, 2L, 2W, MOVING OPERATIONS - DAY ONLY
701316 - 14	LANE CLOSURE, 2L, 2W, BRIDGE REPAIR
701321 - 19	LANE CLOSURE, 2L, 2W, BRIDGE REPAIR WITH BARRIER
701326 - 04	LANE CLOSURE, 2L, 2W, PAVEMENT WIDENING, FOR SPEEDS ≥ 45 MPH
701901 - 11	TRAFFIC CONTROL DEVICES
704001 - 08	TEMPORARY CONCRETE BARRIER
725001 - 01	OBJECT AND TERMINAL MARKERS
781001 - 04	TYPICAL APPLICATIONSD RAISED REFLECTIVE PAVEMENT MARKERS
782006 - 01	GUARDRAIL AND BARRIER WALL REFLECTOR MOUNTING DETAILS

GENERAL NOTES

1. ALL ELEVATIONS SHOWN ON THE PLANS ARE ESTABLISHED FROM NAVD '88 VERTICAL DATUM.

2. NO PASSING ZONES TO BE FIELD VERIFIED BY THE RESIDENT ENGINEER. THE RESIDENT ENGINEER SHALL NOTIFY THE DISTRICT 6 TRAFFIC OPERATIONS ENGINEER WITH ANY NO PASSING ZONE CONCERNS AND AT LEAST 14 DAYS PRIOR TO PLACEMENT OF FINAL PERMANENT PAVEMENT MARKING AT (217)-785-5306.

3. THE DISTRICT BUREAU OF OPERATIONS SHALL BE NOTIFIED THREE WEEKS PRIOR TO IMPLEMENTING TRAFFIC CONTROL. PHONE (217) 785-5306

4. STRUCTURE WORK:

   S.N. 085-0025 - STATION 141+95.12 TO STATION 144+04.67 - CARRY RESURFACING, DO NOT STOP AT EXISTING HMA BUTT JOINT

   S.N. 085-2013 - STATION 586+06.00 - CULVERT REHABILITATION: CULVERT REHAB TO INCLUDE REMOVAL & REPLACEMENT OF TOP SLAB & CONCRETE APPROACHES, ALONG WITH MISC. WORK TO SHORE WING WALSS, FILL VOIDS, RIPRAP & UPDATING GUARDRAIL.

   S.N. 085-0026 - STATION 643+93.62 TO STATION 644+56.43- CARRY RESURFACING, DO NOT STOP AT EXISTING HMA BUTT JOINT

5. STATION EQUATIONS:

   STA. 342+05.42 BK = STA. 342+00.00 AH
   STA. 357+99.95 BK = STA. 358+16.96 AH
   STA. 533+31.46 BK = STA. 528+24.87 AH

6. THE CONTRACTOR SHALL USE TYPE IV PAVEMENT MARKING TAPE AS SHORT-TERM PAVEMENT MARKING ON THE SURFACE LIFT.

APPLICATION RATES

THE FOLLOWING RATES OF APPLICATION WERE UTILIZED TO CALCULATE QUANTITIES

GRANURAL MATERIALS	1.60 TONS/CU YD
BITUMINOUS MATERIAL - TACK COAT	0.05 LBS/SQ FT
HMA SURFACE/BINDER	0.056 TONS/SQ YD*IN
NITROGEN FERTILIZER NUTRIENT	90 LB/ACRE
PHOSPHOROUS FERTILIZER NUTRIENT	90 LB/ACRE
POTASSIUM FERTILIZER NUTRIENT	90 LB/ACRE
MULCH	2 TONS/ACRE
AGRICULTURE GROUND LIMESTONE	2 TONS/ACRE
TEMPORARY EROSION CONTROL SEEDING	100 LB/ACRE

COMMITMENTS

NONE

MIXTURE REQUIREMENTS

LOCATIONS:	ROADWAY
MIXTURE USE (S):	HMA SURFACE COURSE
PG:	PG 58-28
DESIGN AIR VOIDS:	4.0% @ N50
MIXTURE COMPOSITION:	IL-9.5
FRICTION AGGREGATE:	MIX "C"
MIXTURE WEIGHT:	112 LB/SY*IN
QUALITY MANAGEMENT:	QCP
SUBLOT SIZE:	1000 TONS
MATERIAL TRANSFER DEVICE REQUIRED:	YES

LOCATIONS:	ENTRANCES & HMA SHOULDERS
MIXTURE USE (S):	INCIDENTAL HMA
PG:	PG 58-28
DESIGN AIR VOIDS:	4.0% @ N50
MIXTURE COMPOSITION:	IL-9.5
FRICTION AGGREGATE:	MIX "C"
MIXTURE WEIGHT:	112 LB/SY*IN
QUALITY MANAGEMENT:	QC/QA
SUBLOT SIZE:	N/A
MATERIAL TRANSFER DEVICE REQUIRED:	NO

MIXTURE USE (S):	HMA BASE COURSE WIDENING & PAVEMENT CONNECTOR
PG:	PG 64-22
DESIGN AIR VOIDS:	4.0% @ N50
MIXTURE COMPOSITION:	IL-19.0
FRICTION AGGREGATE:	N/A
MIXTURE WEIGHT:	112 LB/SY*IN
QUALITY MANAGEMENT:	QC/QA
SUBLOT SIZE:	N/A
MATERIAL TRANSFER DEVICE REQUIRED:	NO

STATE OF ILLINOIS
DEPARTMENT OF TRANSPORTATION
DIVISION OF HIGHWAYS
DISTRICT 6

EXAMINED October 20, 20 25

ENGINEER OF OPERATIONS

EXAMINED October 17, 20 25

ENGINEER OF PROJECT IMPLEMENTATION

EXAMINED December 2, 20 25

ENGINEER OF PROGRAM DEVELOPMENT

REV - MS

MODEL: General Notes [Sheet]
FILE NAME: c:\pw_work\pwidot\castrosotov\d1106037\72762-sht-02-GenNotes.dgn

USER NAME = Veronica.CastroSoto	DESIGNED -	REVISED -	
	DRAWN -	REVISED -	
	CHECKED -	REVISED -	
PLOT DATE = 4/28/2025	DATE -	REVISED -	

STATE OF ILLINOIS
DEPARTMENT OF TRANSPORTATION

GENERAL NOTES, INDEX OF SHEETS
HIGHWAYS STANDARDS

SCALE: SHEET General Notes SHEETS STA. TO STA.

F.A.P. RTE.	SECTION	COUNTY	TOTAL SHEETS	SHEET NO.
713	119RS-4, 120RS-5,CLV	SCHUYLER	50	2
		CONTRACT NO. 72762		
		ILLINOIS	FED. AID PROJECT	

CODE NO.	ITEM	UNIT	TOTAL QUANTITY	6-00449-0000 STP FUNDING 80% FEDERAL 20% STATE ROADWAY 0005 RURAL	SN 085-2013 STP FUNDING 80% FEDERAL 20% STATE BOX CULVERT 0013 RURAL
20200100	EARTH EXCAVATION	CU YD	203	203	0
20200500	EARTH EXCAVATION (WIDENING)	CU YD	101	0	101
28100107	STONE RIPRAP, CLASS A4	SQ YD	249	0	249
28100109	STONE RIPRAP, CLASS A5	SQ YD	212	0	212
28100205	STONE RIPRAP, CLASS A3	TON	239	239	0
28100207	STONE RIPRAP, CLASS A4	TON	23	23	0
28200200	FILTER FABRIC	SQ YD	530	69	461
31101000	SUBBASE GRANULAR MATERIAL, TYPE B	TON	250	250	0
35650300	BASE COURSE WIDENING 8"	SQ YD	555	0	555
40600290	BITUMINOUS MATERIALS (TACK COAT)	POUND	66,688	66,688	0
40600370	LONGITUDINAL JOINT SEALANT	FOOT	60,625	60,625	0
40600405	MATERIAL TRANSFER DEVICE	TON	16,598	16,598	0
40600982	HOT-MIX ASPHALT SURFACE REMOVAL - BUTT JOINT	SQ YD	147	147	0
40600990	TEMPORARY RAMP	SQ YD	49	49	0

CODE NO.	ITEM	UNIT	TOTAL QUANTITY	6-00449-0000 STP FUNDING 80% FEDERAL 20% STATE ROADWAY 0005 RURAL	SN 085-2013 STP FUNDING 80% FEDERAL 20% STATE BOX CULVERT 0013 RURAL
40604050	HOT-MIX ASPHALT SURFACE COURSE, IL-9.5, MIX "C", N50	TON	16,598	16,598	0
40800029	BITUMINOUS MATERIALS (TACK COAT)	POUND	1,423	1,423	0
40800050	INCIDENTAL HOT-MIX ASPHALT SURFACING	TON	310	310	0
42000070	PAVEMENT CONNECTOR (HMA) FOR BRIDGE APPROACH SLAB	SQ YD	53.3	0	53.3
44000100	PAVEMENT REMOVAL	SQ YD	107	0	107
44000155	HOT-MIX ASPHALT SURFACE REMOVAL, 1 1/2"	SQ YD	163,295	163,295	0
44000400	GUTTER REMOVAL	FOOT	1,941	1,941	0
44004250	PAVED SHOULDER REMOVAL	SQ YD	126	0	126
48102100	AGGREGATE WEDGE SHOULDER, TYPE B	TON	851	851	0
48203100	HOT-MIX ASPHALT SHOULDERS	TON	182	182	0
50102400	CONCRETE REMOVAL	CU YD	39.8	0	39.8
50104000	BRIDGE RAIL REMOVAL	FOOT	67	0	67
50300225	CONCRETE STRUCTURES	CU YD	23.5	0	23.5
50300255	CONCRETE SUPERSTRUCTURE	CU YD	40.1	0	40.1

CODE NO.	ITEM	UNIT	TOTAL QUANTITY	6-00449-0000 STP FUNDING 80% FEDERAL 20% STATE ROADWAY 0005 RURAL	SN 085-2013 STP FUNDING 80% FEDERAL 20% STATE BOX CULVERT 0013 RURAL
50300300	PROTECTIVE COAT	SQ YD	523	0	523
50301350	CONCRETE SUPERSTRUCTURE (APPROACH SLAB)	CU YD	108.3	0	108.3
50800205	REINFORCEMENT BARS, EPOXY COATED	POUND	53,910	0	53910
50800515	BAR SPLICERS	EACH	380	0	380
50901050	STEEL RAILING, TYPE SM	FOOT	127	0	127
51500100	NAME PLATES	EACH	1	0	1
53212754	STRUCTURAL REPAIR OF CONCRETE (DEPTH EQUAL TO OR LESS THAN 5 INCHES)	SQ FT	40	0	40
60100060	CONCRETE HEADWALLS FOR PIPE DRAINS	EACH	2	2	0
60260500	INLETS TO BE ADJUSTED WITH NEW TYPE 3 FRAME AND GRATE	EACH	8	8	0
60600095	CLASS SI CONCRETE (OUTLET)	CU YD	28	28	0
60602500	CONCRETE GUTTER, TYPE A	FOOT	1,653	1,653	0
* 63000001	STEEL PLATE BEAM GUARDRAIL, TYPE A, 6 FOOT POSTS	FOOT	200	0	200
* 63100087	TRAFFIC BARRIER TERMINAL, TYPE 6A	EACH	4	0	4
* 63100167	TRAFFIC BARRIER TERMINAL, TYPE 1 (SPECIAL) TANGENT	EACH	4	0	4

* SPECIALTY ITEM

MODEL: SOQ 3 [Sheet]
FILE NAME: c:\pw_work\pwidot\castrosotov\d1106097\72762-sht-03-SOQ.dgn

USER NAME = Veronica.CastroSoto	DESIGNED -	REVISED -	
	DRAWN -	REVISED -	
	CHECKED -	REVISED -	
PLOT DATE = 12/5/2025	DATE -	REVISED -	

STATE OF ILLINOIS
DEPARTMENT OF TRANSPORTATION

SUMMARY OF QUANTITIES

SCALE: SHEET 3 OF 6 SHEETS STA. TO STA.

F.A.P RTE.	SECTION	COUNTY	TOTAL SHEETS	SHEET NO.
713	119RS-4, 120RS-5,CLV	SCHUYLER	56	5

CONTRACT NO. 72762

ILLINOIS FED. AID PROJECT

CODE NO.	ITEM	UNIT	TOTAL QUANTITY	6-00449-0000 STP FUNDING 80% FEDERAL 20% STATE ROADWAY 0005 RURAL	SN 085-2013 STP FUNDING 80% FEDERAL 20% STATE BOX CULVERT 0013 RURAL
63200310	GUARDRAIL REMOVAL	FOOT	586	0	586
67000400	ENGINEER'S FIELD OFFICE, TYPE A	CAL MO	12	11	1
67100100	MOBILIZATION	L SUM	1	0.9	0.1
70100100	TRAFFIC CONTROL AND PROTECTION, STANDARD 701316	EACH	4	4	0
70100405	TRAFFIC CONTROL AND PROTECTION, STANDARD 701321	EACH	1	0	1
70100450	TRAFFIC CONTROL AND PROTECTION, STANDARD 701201	L SUM	1	1	0
70100460	TRAFFIC CONTROL AND PROTECTION, STANDARD 701306	L SUM	1	1	0
70100500	TRAFFIC CONTROL AND PROTECTION, STANDARD 701326	L SUM	1	0	1
70106500	TEMPORARY BRIDGE TRAFFIC SIGNALS	EACH	5	4	1
70106700	TEMPORARY RUMBLE STRIPS	EACH	30	24	6
70107025	CHANGEABLE MESSAGE SIGN	CAL DA	200	50	150
70300100	SHORT TERM PAVEMENT MARKING	FOOT	12,132	12,132	0
70300150	SHORT TERM PAVEMENT MARKING REMOVAL	SQ FT	2,022	2,022	0
70400100	TEMPORARY CONCRETE BARRIER	FOOT	450	0	450

	CODE NO.	ITEM	UNIT	TOTAL QUANTITY	6-00449-0000 STP FUNDING 80% FEDERAL 20% STATE ROADWAY 0005 RURAL	SN 085-2013 STP FUNDING 80% FEDERAL 20% STATE BOX CULVERT 0013 RURAL
	70400200	RELOCATE TEMPORARY CONCRETE BARRIER	FOOT	450	0	450
	70600260	IMPACT ATTENUATORS, TEMPORARY (FULLY REDIRECTIVE, NARROW), TEST LEVEL 3	EACH	2	0	2
	70600332	IMPACT ATTENUATORS, RELOCATE (FULLY REDIRECTIVE, NARROW), TEST LEVEL 3	EACH	2	0	2
*	72501000	TERMINAL MARKER - DIRECT APPLIED	EACH	4	0	4
*	78009005	MODIFIED URETHANE PAVEMENT MARKING - LINE 5"	FOOT	192,605	192,605	0
*	78009024	MODIFIED URETHANE PAVEMENT MARKING - LINE 24"	FOOT	15	15	0
*	78100100	RAISED REFLECTIVE PAVEMENT MARKER	EACH	762	762	0
*	78200005	GUARDRAIL REFLECTORS, TYPE A	EACH	14	6	8
	78300200	RAISED REFLECTIVE PAVEMENT MARKER REMOVAL	EACH	762	762	0
	78300201	PAVEMENT MARKING REMOVAL - GRINDING	SQ FT	450	0	450
	X0323992	HELICAL GROUND ANCHORS	EACH	2	0	2
	X4400100	PORTLAND CEMENT CONCRETE SURFACE REMOVAL (VARIABLE DEPTH)	SQ YD	397	397	0
	X4811900	AGGREGATE SHOULDERS (SPECIAL)	TON	33	0	33
	X7200201	WIDTH RESTRICTION SIGNING	L SUM	1	0.5	0.5

* SPECIALTY ITEM

CODE NO.	ITEM	UNIT	TOTAL QUANTITY	6-00449-0000 STP FUNDING 80% FEDERAL 20% STATE ROADWAY 0005 RURAL	SN 085-2013 STP FUNDING 80% FEDERAL 20% STATE BOX CULVERT 0013 RURAL
X5051206	STRUCTURAL STEEL REPAIR	POUND	220	0	220
Z0004552	APPROACH SLAB REMOVAL	SQ YD	139	0	139
Z0013798	CONSTRUCTION LAYOUT	L SUM	1	0.9	0.1
Ø Z0076600	TRAINEES	HOUR	4000	4000	
Z0032500	JOINT SEALING (PATCHES)	FOOT	166	0	166
Ø Z0076604	TRAINEES TRAINING PROGRAM GRADUATE	HOUR	4000	4000	
Z0073700	TEMPORARY WALL BRACING SYSTEM	L SUM	1	0	1

Ø 0042

REV - MS

MODEL: SOQ 6 [Sheet]
FILE NAME: c:\pw_work\pwidot\castrosotov\d1106097\72762-sht-03-SOQ.dgn

USER NAME = Veronica.CastroSoto	DESIGNED -	REVISED -	STATE OF ILLINOIS DEPARTMENT OF TRANSPORTATION
	DRAWN -	REVISED -	
	CHECKED -	REVISED -	
PLOT DATE = 12/5/2025	DATE -	REVISED -	

SUMMARY OF QUANTITIES

SCALE: SHEET 6 OF 6 SHEETS STA. TO STA.

F.A.P RTE.	SECTION	COUNTY	TOTAL SHEETS	SHEET NO.
713	119RS-4, 120RS-5,CLV	SCHUYLER	56	8

CONTRACT NO. 72762

ILLINOIS FED. AID PROJECT

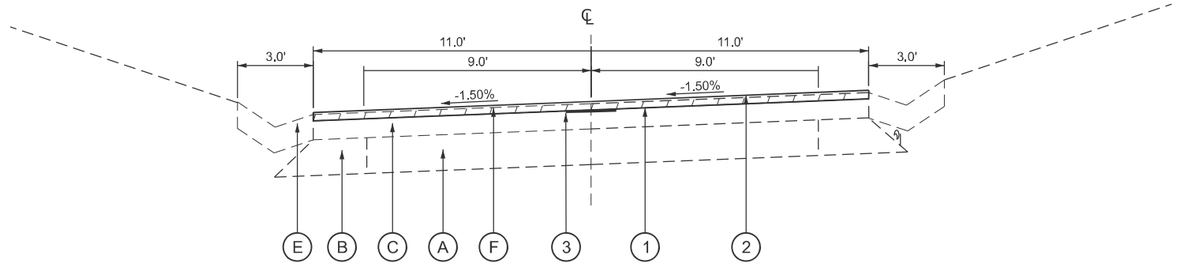

TYPICAL SECTION #1
IL 101

STA 120+00 To 130+46.73
STA 152+93.75 To 157+00

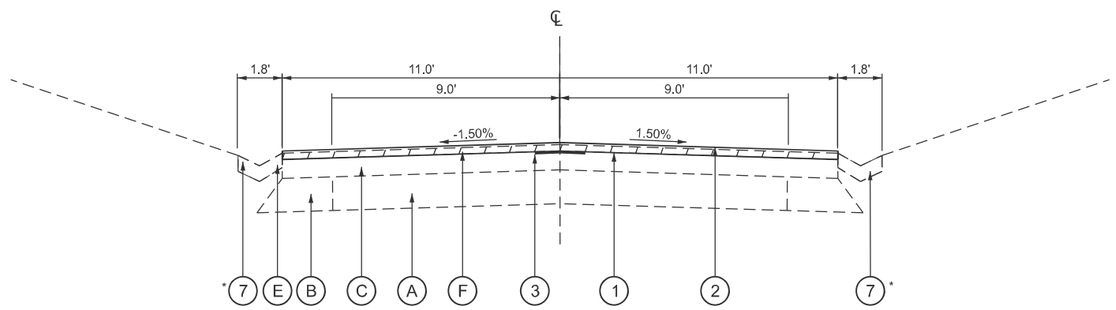

TYPICAL SECTION #2
IL 101

STA 130+46 to STA 139+90
STA 140+15 to 141+00
Bridge Omission
STA 144+55 to Sta 152+93.75
STA 169+50 to Sta 212+00

STA 271+10 to Sta 281+00
STA 295+00 to Sta 311+00
STA 326+00 to Sta 362+00
STA to 387+00 to Sta 400+76

*NOTES: SEE GUTTER SCHEDULE FOR
PROPOSED CONCRETE GUTTER, TYPE A

LEGEND - TYPICAL SECTIONS

- (A) EXISTING PCC PAVEMENT, 8"
- (B) EXISTING BIT. CONC. WIDENING, 9"
- (C) EXISTING BIT. CONC. OVERLAYS, 5-7"
- (D) EXISTING AGG. WEDGE SHOULDERS TYPE B
- (E) EXISTING GUTTER, TYPE A
- (F) EXISTING BIT. CONC. OVERLAY 1.5"
- (G) EXISTING COURSE WIDENING 8"
- (H) EXISTING CONCRETE CURB AND GUTTER TYPE B
- (I) EXISTING STEEL PLATE BEAM GUARDRAIL TYPE A
- (J) EXISTING CONCRETE GUTTER, TYPE B
- (1) PROPOSED HOT-MIX ASPHALT SURFACE REMOVAL, 1.5"
- (2) PROPOSED HOT-MIX ASPHALT SURFACE COURSE, IL-9.5, MIX "C", N50 (2")
- (3) PROPOSED LONGITUDINAL JOINT SEALANT
- (4) PROPOSED HOT-MIX ASPHALT SHOULDERS (TONS)
- (5) PROPOSED AGGREGATE WEDGE SHOULDERS, TYPE B
- (6) PROPOSED HOT-MIX ASPHALT BASE WIDENING, 8"
- (7) PROPOSED CONCRETE GUTTER, TYPE A

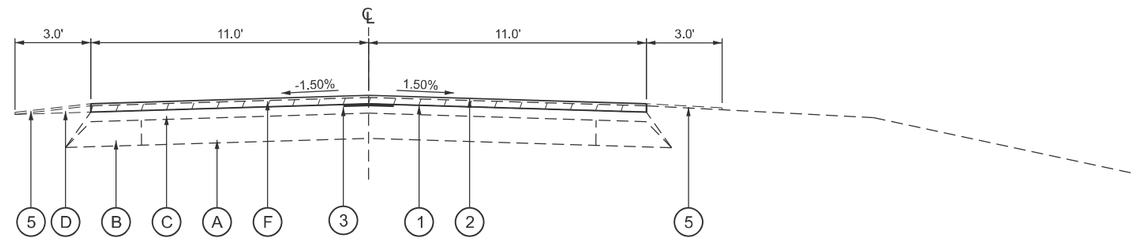

TYPICAL SECTION #3
FAP 713 (IL 101)

LT STA 139+50 To STA 140+15
RT STA 139+90 To STA 140+05

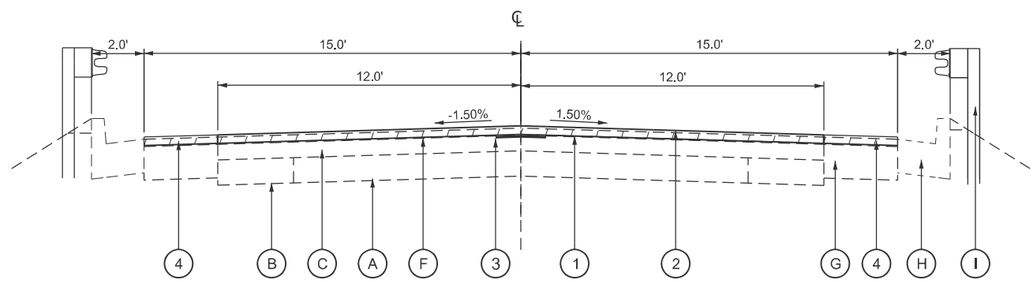

TYPICAL SECTION #4
FAP 713 (IL 101)

RT 140+05 to 141+95
LT 140+15 to 141+95

LEGEND - TYPICAL SECTIONS

- (A) EXISTING PCC PAVEMENT, 8"
- (B) EXISTING BIT. CONC. WIDENING, 9"
- (C) EXISTING BIT. CONC. OVERLAYS, 5-7"
- (D) EXISTING AGG. WEDGE SHOULDERS TYPE B
- (E) EXISTING GUTTER, TYPE A
- (F) EXISTING BIT. CONC. OVERLAY 1.5"
- (G) EXISTING COURSE WIDENING 8"
- (H) EXISTING CONCRETE CURB AND GUTTER TYPE B
- (I) EXISTING STEEL PLATE BEAM GUARDRAIL TYPE A
- (J) EXISTING CONCRETE GUTTER, TYPE B
- (1) PROPOSED HOT-MIX ASPHALT SURFACE REMOVAL, 1.5"
- (2) PROPOSED HOT-MIX ASPHALT SURFACE COURSE, IL-9.5, MIX "C", N50 (2")
- (3) PROPOSED LONGITUDINAL JOINT SEALANT
- (4) PROPOSED HOT-MIX ASPHALT SHOULDERS (TONS)
- (5) PROPOSED AGGREGATE WEDGE SHOULDERS, TYPE B
- (6) PROPOSED HOT-MIX ASPHALT BASE WIDENING, 8"
- (7) PROPOSED CONCRETE GUTTER, TYPE A

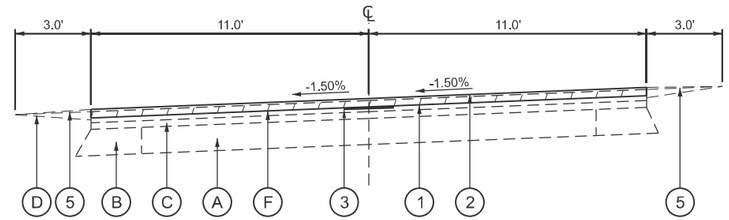

TYPICAL SECTION #5
FAP 713 (IL 101)

STA 157+00 To 164+25.69
STA 216+78.65 To 226+67.29
STA 240+02.51 To 250+76.85
STA 282+97.33 To 283+60
STA 290+010 To 292+74.91

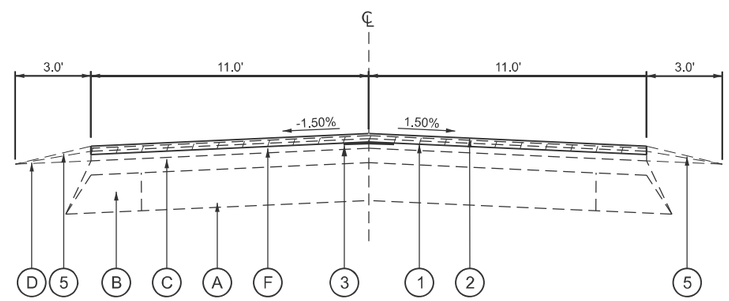

TYPICAL SECTION #6
FAP 713 (IL 101)

STA 141+00 To STA 144+55
STA 164+25.29 To STA 169+50
STA 212+00 To STA 216+78.65
STA 226+67.29 To STA 240+02.51
STA 250+76.85 To STA 269+50

STA 281+00 To STA 282+97.33
STA 292+74.91 To STA 295+00
STA 311+00 To STA 326+00
STA 362+00 To STA 386+00
STA 412+00 To STA 511+00

LEGEND - TYPICAL SECTIONS

- (A) EXISTING PCC PAVEMENT, 8"
- (B) EXISTING BIT. CONC. WIDENING, 9"
- (C) EXISTING BIT. CONC. OVERLAYS, 5-7"
- (D) EXISTING AGG. WEDGE SHOULDERS TYPE B
- (E) EXISTING GUTTER, TYPE A
- (F) EXISTING BIT. CONC. OVERLAY 1.5"
- (G) EXISTING COURSE WIDENING 8"
- (H) EXISTING CONCRETE CURB AND GUTTER TYPE B
- (I) EXISTING STEEL PLATE BEAM GUARDRAIL TYPE A
- (J) EXISTING CONCRETE GUTTER, TYPE B
- (1) PROPOSED HOT-MIX ASPHALT SURFACE REMOVAL, 1.5"
- (2) PROPOSED HOT-MIX ASPHALT SURFACE COURSE, IL-9.5, MIX "C", N50 (2")
- (3) PROPOSED LONGITUDINAL JOINT SEALANT
- (4) PROPOSED HOT-MIX ASPHALT SHOULDERS (TONS)
- (5) PROPOSED AGGREGATE WEDGE SHOULDERS, TYPE B
- (6) PROPOSED HOT-MIX ASPHALT BASE WIDENING, 8"
- (7) PROPOSED CONCRETE GUTTER, TYPE A

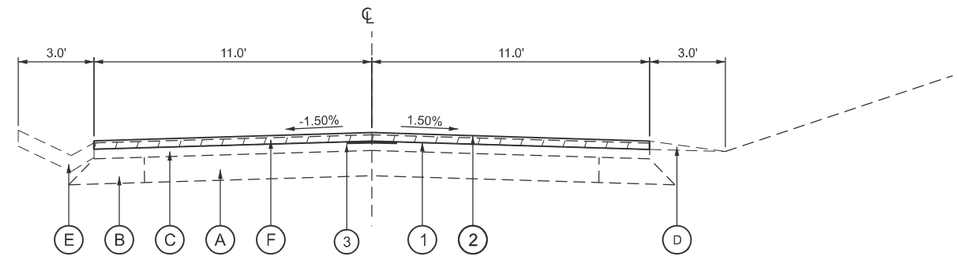

TYPICAL SECTION #7
FAP 713 (IL 101)

STA 269+50 To 271+10
STA 386+00 To 387+00

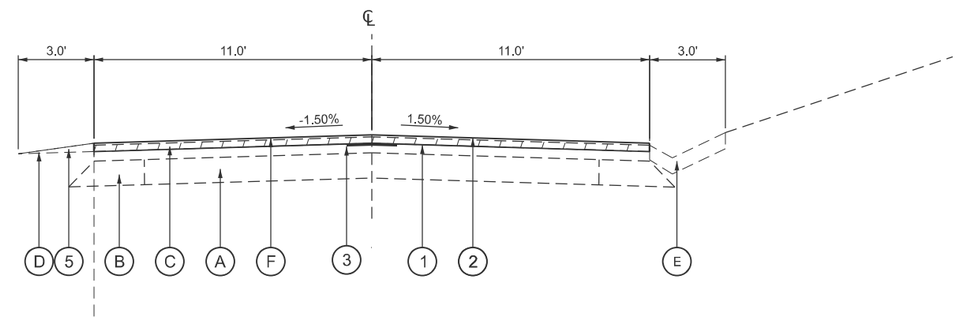

TYPICAL SECTION #8
FAP 713 (IL 101)

STA 283+60 To 290+10

LEGEND - TYPICAL SECTIONS

- (A) EXISTING PCC PAVEMENT, 8"
- (B) EXISTING BIT. CONC. WIDENING, 9"
- (C) EXISTING BIT. CONC. OVERLAYS, 5-7"
- (D) EXISTING AGG. WEDGE SHOULDERS TYPE B
- (E) EXISTING GUTTER, TYPE A
- (F) EXISTING BIT. CONC. OVERLAY 1.5"
- (G) EXISTING COURSE WIDENING 8"
- (H) EXISTING CONCRETE CURB AND GUTTER TYPE B
- (I) EXISTING STEEL PLATE BEAM GUARDRAIL TYPE A
- (J) EXISTING CONCRETE GUTTER, TYPE B
- (1) PROPOSED HOT-MIX ASPHALT SURFACE REMOVAL, 1.5"
- (2) PROPOSED HOT-MIX ASPHALT SURFACE COURSE, IL-9.5, MIX "C", N50 (2")
- (3) PROPOSED LONGITUDINAL JOINT SEALANT
- (4) PROPOSED HOT-MIX ASPHALT SHOULDERS (TONS)
- (5) PROPOSED AGGREGATE WEDGE SHOULDERS, TYPE B
- (6) PROPOSED HOT-MIX ASPHALT BASE WIDENING, 8"
- (7) PROPOSED CONCRETE GUTTER, TYPE A

*NOTES: SEE GUTTER SCHEDULE FOR
PROPOSED CONCRETE GUTTER, TYPE A

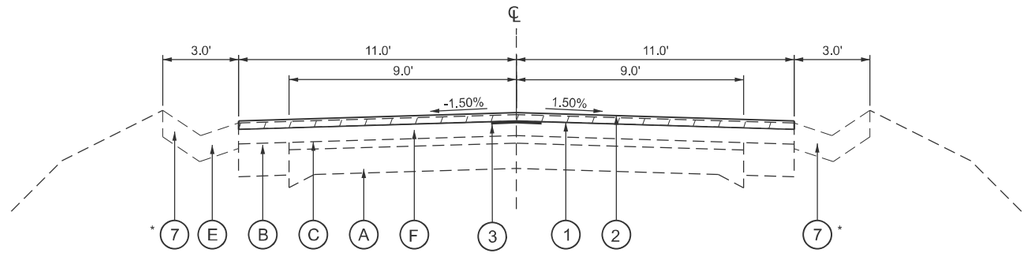

TYPICAL SECTION #9
FAP 713 (IL 101)

LT STA 386+38 to STA 400+76
RT STA 387+63 to STA 400+76

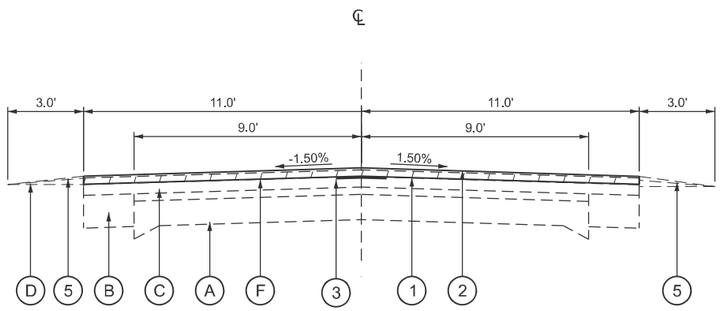

TYPICAL SECTION #10
FAP 713 (IL 101)

STA 511+00 To STA 553.75.00
STA 521+85.30 To STA 526+59.84
STA 528+24.60 To STA 537+25
RT STA 537+25 To STA 539+05.31
RT STA 541+67.65 To STA 542+00

LT STA 541+70 To STA 546+76
STA 562+70.50 To STA 573+84.90
STA 586+70.50 To STA 627+66.5
STA 648+50.60 To STA 652+00
STA 674+86.60 To STA 681+65.80
STA 693+52.50 To STA 717+80
RT STA 717+80 To STA 719+50
STA 725+00 To STA 738+85

LEGEND - TYPICAL SECTIONS

- (A) EXISTING PCC PAVEMENT, 8"
- (B) EXISTING BIT. CONC. WIDENING, 9"
- (C) EXISTING BIT. CONC. OVERLAYS, 5-7"
- (D) EXISTING AGG. WEDGE SHOULDERS TYPE B
- (E) EXISTING GUTTER, TYPE A
- (F) EXISTING BIT. CONC. OVERLAY 1.5"
- (G) EXISTING COURSE WIDENING 8"
- (H) EXISTING CONCRETE CURB AND GUTTER TYPE B
- (I) EXISTING STEEL PLATE BEAM GUARDRAIL TYPE A
- (J) EXISTING CONCRETE GUTTER, TYPE B
- (1) PROPOSED HOT-MIX ASPHALT SURFACE REMOVAL, 1.5"
- (2) PROPOSED HOT-MIX ASPHALT SURFACE COURSE, IL-9.5, MIX "C", N50 (2")
- (3) PROPOSED LONGITUDINAL JOINT SEALANT
- (4) PROPOSED HOT-MIX ASPHALT SHOULDERS (TONS)
- (5) PROPOSED AGGREGATE WEDGE SHOULDERS, TYPE B
- (6) PROPOSED HOT-MIX ASPHALT BASE WIDENING, 8"
- (7) PROPOSED CONCRETE GUTTER, TYPE A

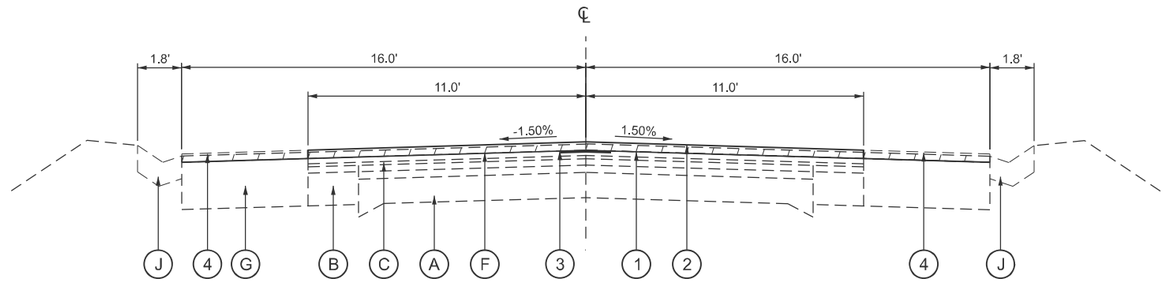

TYPICAL SECTION #11
FAP 713 (IL 101)

STA 553+75.00 To STA 553+99.00

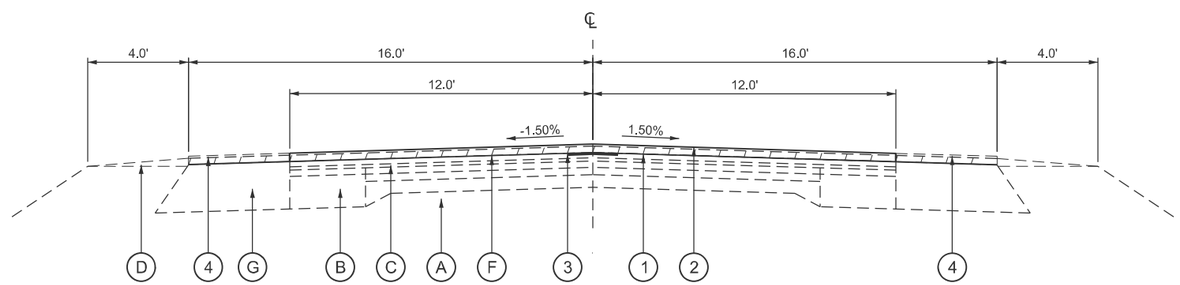

TYPICAL SECTION #12
FAP 713 (IL 101)

STA 553+99.0 To STA 555+47.00

LEGEND - TYPICAL SECTIONS

- (A) EXISTING PCC PAVEMENT, 8"
- (B) EXISTING BIT. CONC. WIDENING, 9"
- (C) EXISTING BIT. CONC. OVERLAYS, 5-7"
- (D) EXISTING AGG. WEDGE SHOULDERS TYPE B
- (E) EXISTING GUTTER, TYPE A
- (F) EXISTING BIT. CONC. OVERLAY 1.5"
- (G) EXISTING COURSE WIDENING 8"
- (H) EXISTING CONCRETE CURB AND GUTTER TYPE B
- (I) EXISTING STEEL PLATE BEAM GUARDRAIL TYPE A
- (J) EXISTING CONCRETE GUTTER, TYPE B
- (1) PROPOSED HOT-MIX ASPHALT SURFACE REMOVAL, 1.5"
- (2) PROPOSED HOT-MIX ASPHALT SURFACE COURSE, IL-9.5, MIX "C", N50 (2")
- (3) PROPOSED LONGITUDINAL JOINT SEALANT
- (4) PROPOSED HOT-MIX ASPHALT SHOULDERS (TONS)
- (5) PROPOSED AGGREGATE WEDGE SHOULDERS, TYPE B
- (6) PROPOSED HOT-MIX ASPHALT BASE WIDENING, 8"
- (7) PROPOSED CONCRETE GUTTER, TYPE A

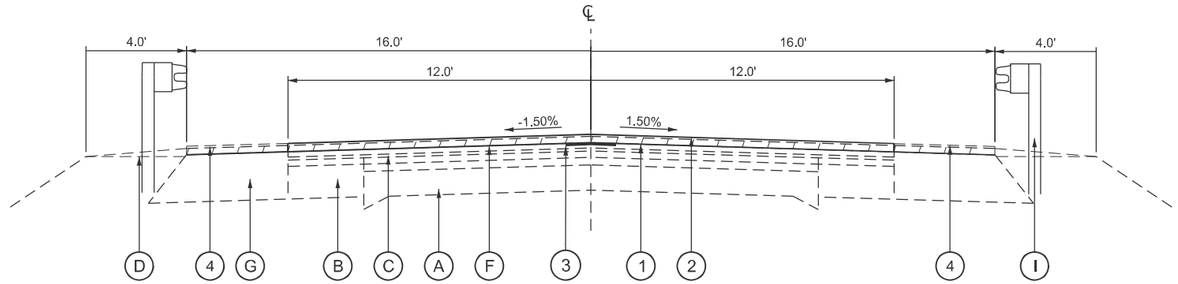

TYPICAL SECTION #13
FAP 713 (IL 101)

STA 555+47.00 to STA 556+43.25
STA 556+43.25 to STA 556+72.25 OMISSION
STA 556+72.75 to STA 562+03.25 SN 085-0514 OMISSION

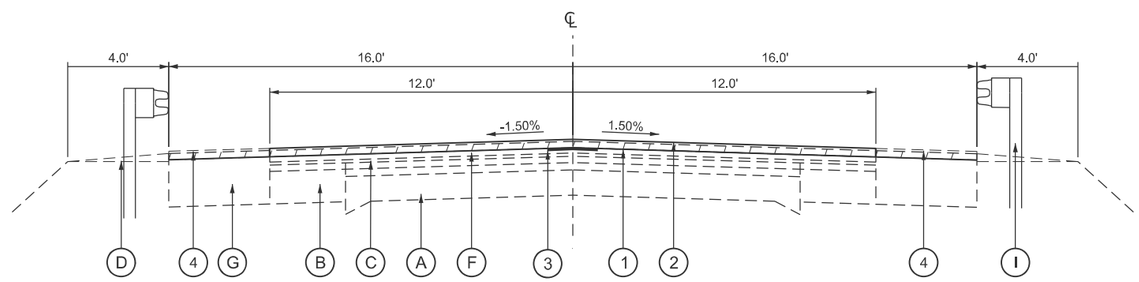

TYPICAL SECTION #14
FAP 713 (IL 101)

STA 562+03.25 to STA 562+32.75 OMISSION
STA 562+32.75 to STA 564+55.00

LEGEND - TYPICAL SECTIONS

- (A) EXISTING PCC PAVEMENT, 8"
- (B) EXISTING BIT. CONC. WIDENING, 9"
- (C) EXISTING BIT. CONC. OVERLAYS, 5-7"
- (D) EXISTING AGG. WEDGE SHOULDERS TYPE B
- (E) EXISTING GUTTER, TYPE A
- (F) EXISTING BIT. CONC. OVERLAY 1.5"
- (G) EXISTING COURSE WIDENING 8"
- (H) EXISTING CONCRETE CURB AND GUTTER TYPE B
- (I) EXISTING STEEL PLATE BEAM GUARDRAIL TYPE A
- (J) EXISTING CONCRETE GUTTER, TYPE B
- (1) PROPOSED HOT-MIX ASPHALT SURFACE REMOVAL, 1.5"
- (2) PROPOSED HOT-MIX ASPHALT SURFACE COURSE, IL-9.5, MIX "C", N50 (2")
- (3) PROPOSED LONGITUDINAL JOINT SEALANT
- (4) PROPOSED HOT-MIX ASPHALT SHOULDERS (TONS)
- (5) PROPOSED AGGREGATE WEDGE SHOULDERS, TYPE B
- (6) PROPOSED HOT-MIX ASPHALT BASE WIDENING, 8"
- (7) PROPOSED CONCRETE GUTTER, TYPE A

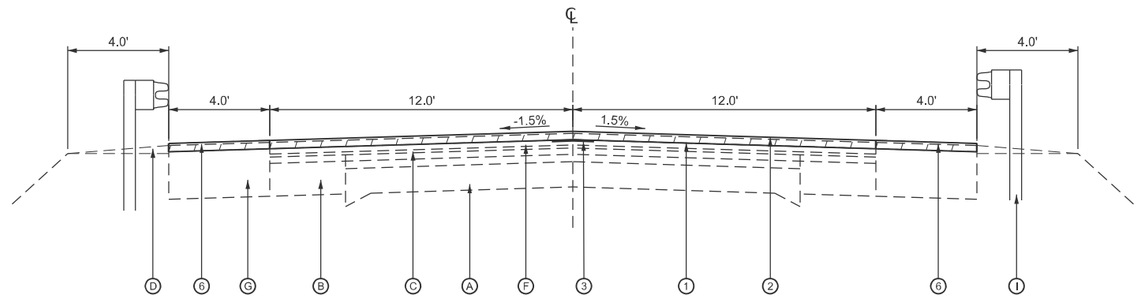

TYPICAL SECTION #15
FAP 713 (IL 101)

STA 583+67.17 TO STA 588+43.00
STA 585+85.89 TO STA 586+19.34 CULVERT OMISSION

LEGEND - TYPICAL SECTIONS

- (A) EXISTING PCC PAVEMENT, 8"
- (B) EXISTING BIT. CONC. WIDENING, 9"
- (C) EXISTING BIT. CONC. OVERLAYS, 5-7"
- (D) EXISTING AGG. WEDGE SHOULDERS TYPE B
- (E) EXISTING GUTTER, TYPE A
- (F) EXISTING BIT. CONC. OVERLAY 1.5"
- (G) EXISTING COURSE WIDENING 8"
- (H) EXISTING CONCRETE CURB AND GUTTER TYPE B
- (I) EXISTING STEEL PLATE BEAM GUARDRAIL TYPE A
- (J) EXISTING CONCRETE GUTTER, TYPE B
- (1) PROPOSED HOT-MIX ASPHALT SURFACE REMOVAL, 1.5"
- (2) PROPOSED HOT-MIX ASPHALT SURFACE COURSE, IL-9.5, MIX "C", N50 (2")
- (3) PROPOSED LONGITUDINAL JOINT SEALANT
- (4) PROPOSED HOT-MIX ASPHALT SHOULDERS (TONS)
- (5) PROPOSED AGGREGATE WEDGE SHOULDERS, TYPE B
- (6) PROPOSED HOT-MIX ASPHALT BASE WIDENING, 8"
- (7) PROPOSED CONCRETE GUTTER, TYPE A

MODEL: Culvert Section-1 [Sheet]
FILE NAME: c:\pw_work\pwidot\castrosotov\d1106097\72762-sht-04-Typical.dgn

USER NAME = Veronica.CastroSoto	DESIGNED -	REVISED -	
	DRAWN -	REVISED -	
	CHECKED -	REVISED -	
PLOT DATE = 12/5/2025	DATE -	REVISED -	

STATE OF ILLINOIS
DEPARTMENT OF TRANSPORTATION

TYPICAL SECTIONS
FAP 713 (ILL 101)

SCALE: | SHEET 8 OF 8 SHEETS | STA. TO STA.

F.A.P RTE.	SECTION	COUNTY	TOTAL SHEETS	SHEET NO.
713	119RS-4, 120RS-5,CLV	SCHUYLER	56	16

CONTRACT NO. 72762

ILLINOIS | FED. AID PROJECT

PAVING

ROADWAY	STATION	TO	STATION	SIDE	LENGTH (FOOT)	WIDTH (FOOT)	AREA (SQ FT)	40600982 HOT-MIX ASPHALT SURFACE REMOVAL, BUTT JOINT (SQ YD)	40600990 TEMPORARY RAMP (SQ YD)	44000155 HOT-MIX ASPHALT SURFACE REMOVAL, 1.5" (SQ YD)	40604050 HOT-MIX ASPHALT SURFACE COURSE IL-9.5, MIX "C", N50 2" (TON)	40600290 BITUMINOUS MATERIALS (TACK COAT) (POUND)	40600405 MATERIAL TRANSFER DEVICE (TON)
IL 101	120+16.54	-	120+26.54	LT & RT	10	22	220		24				
	120+16.54	-	141+95.12	LT & RT	2179	22	47929			5325	596	2396	596
	141+85.12	-	141+95.12	LT & RT	10	22	220	24					
	BRIDGE OMISSION: STATION 141+95.12 TO STATION 144+04.67												
	144+04.67	-	144+14.67	LT & RT	10	22	220	24					
	144+04.67	-	342+05.42	LT & RT	19801	22	435617			48402	5421	21781	5421
	STATION EQUATION: STATION 342+05.42 BK = STATION 342+00.00 AH												
	342+00.00	-	357+99.95	LT & RT	1600	22	35199			3911	438	1760	438
	STATION EQUATION: STATION 357+99.95 BK = STATION 358+16.96 AH												
	358+16.96	-	533+31.46	LT & RT	17515	22	385319			42813	4795	19266	4795
	STATION EQUATION: STATION 533+31.46 BK = STATION 528+24.87 AH												
	528+24.87	-	556+43.31	LT & RT	2818	22	62006			6890	772	3100	772
	556+33.31	-	556+43.31	LT & RT	10	22	220	24					
	BRIDGE OMISSION: STATION 556+43.31 = STATION 562+31.71												
	562+31.70	-	562+41.70	LT & RT	10	22	220	24					
	562+31.71	-	585+85.90	LT & RT	2354	22	51792			5755	645	2590	645
	CULVERT OMISSION: STATION 585+85.90 TO STATION 586+19.35												
	586+19.35	-	643+93.37	LT & RT	5774	22	127028			14114	1581	6351	1581
	643+82.29	-	643+93.62	LT & RT	10	22	220	24					
	BRIDGE OMISSION: STATION 643+93.62 TO STATION 644+56.43												
	644+56.43	-	644+67.79	LT & RT	10	22	220	24					
	644+56.15	-	730+41.13	LT & RT	8585	22	188870			20986	2350	9443	2350
	730+31.13	-	730+41.13	LT & RT	10	22	220		24				
							TOTAL	147	49	148195	16598	66688	16598

INLETS TO BE ADJUSTED

ROADWAY	STATION	OFFSET	SIDE	60260500 INLETS TO BE ADJUSTED WITH NEW TYPE 3 FRAME AND GRATE (EACH)
IL 101	141+85.14	15.6	RT	1
	144+14.52	15.3	RT	1
	198+93.34	15.0	RT	1
	349+67.42	15.1	RT	1
	141+85.03	14.9	LT	1
	144+14.40	15.3	LT	1
	349+67.72	14.7	LT	1
	402+21.79	13.0	LT	1
			TOTAL	8

60100060 - CONCRETE HEADWALLS FOR PIPE DRAINS

ROADWAY	STATION	OFFSET	SIDE	EACH
IL 101	179+67.26	30.0	LT	1
	179+89.58	28.3	RT	1
			TOTAL	2

SHOULDER PAVING

ROADWAY	STATION	SIDE	TO	STATION	SIDE	*** AREA (L X W) SQ FT	DEPTH FEET	44000155 HOT-MIX ASPHALT SURFACE REMOVAL 1.5" SQ YD	48203100 HOT-MIX ASPHALT SHOULDERS TON	40600290 BITUMINOUS MATERIALS (TACK COAT) POUND
IL 101	140+07.72	LT	-	141+95.19	LT	522.4	0.13	58.0	7	26
	BRIDGE OMISSION: STATION 141+95.12 TO STATION 144+04.67									
	144+04.75	LT	-	146+11.05	LT	588.6	0.13	65.4	7	29
	554+10.04	LT	-	556+43.26	LT	1151.1	0.13	127.9	14	58
	BRIDGE OMISSION: STATION 556+43.31 TO STATION 562+31.71									
	562+31.68	LT	-	564+54.73	LT	1088.9	0.13	121.0	14	54
	583+69.03	LT	-	585+55.87	LT	1135.6	0.13	126.2	14	57
	586+49.31	LT	-	588+43.00	LT	1162.1	0.13	129.1	14	58
	640+24.41	LT	-	644+01.86	LT	752.8	0.13	83.6	9	38
	644+64.96	LT	-	645+97.96	LT	380.3	0.13	42.3	5	19
	139+97.10	RT	-	141+95.31	RT	608.1	0.13	67.6	8	30
	144+04.77	RT	-	146+10.61	RT	638.7	0.13	71.0	8	32
	508+12.02	RT	-	508+79.01	RT	254.3	0.13	28.3	3	13
	510+12.18	RT	-	511+09.92	RT	424.3	0.13	47.1	5	21
	554+11.69	RT	-	556+43.49	RT	1176.3	0.13	130.7	15	59
	562+31.63	RT	-	564+53.90	RT	1091.1	0.13	121.2	14	55
	583+66.99	RT	-	585+55.83	RT	1118.6	0.13	124.3	14	56
	586+49.57	RT	-	588+43.02	RT	1160.9	0.13	129.0	14	58
	642+84.47	RT	-	643+85.34	RT	619.6	0.13	68.8	8	31
	644+47.60	RT	-	645+96.85	RT	765.7	0.13	85.1	10	38
							TOTAL	1627	182	732

*** AREA MEASURED USING CADD

RAISED REFLECTIVED PAVEMENT MARKING

ROADWAY	STATION	SIDE	TO	STATION	SIDE	TYPE	78100100 RAISED REFLECTIVE PAVEMENT MARKER (EACH)	78300200 RAISED REFLECTIVE PAVEMENT MARKER REMOVAL (EACH)
IL 101	120+16.54	CL	-	141+95.12	CL	TWO-WAY AMBER	28	28
	BRIDGE OMISSION: STATION 141+95.12 TO STATION 144+04.67							
	144+04.67	CL		342+05.42	CL	TWO WAY AMBER	248	248
	STATION EQUATION: STATION 342+05.42 BK = STATION 342+00.00 AH							
	342+00.00	CL	-	357+99.95	CL	TWO-WAY AMBER	20	20
	STATION EQUATION: STATION 357+99.95 BK = STATION 358+16.96 AH							
	358+16.96	CL	-	533+31.46	CL	TWO-WAY AMBER	219	219
	STATION EQUATION: STATION 533+31.46 BK = STATION 528+24.87 AH							
	528+24.87	CL	-	556+43.31	CL	TWO-WAY AMBER	36	36
	BRIDGE OMISSION: STATION 556+43.31 TO STATION 562+31.71							
	562+31.71	CL	-	643+93.37	CL	TWO-WAY AMBER	103	103
	BRIDGE OMISSION: STATION 643+93.37 TO STATION 644+56.15							
	644+56.15	CL	-	730+41.13	CL	TWO-WAY AMBER	108	108
						TOTAL	762	762

ENTRANCES & SIDEROAD

ROADWAY	STATION	SIDE	DESCRIPTION	** HMA AREA SQ FT	40600982 HOT-MIX ASPHALT SURFACE REMOVAL BUTT JOINT SQ YD	40600290 BITUMINOUS MATERIALS (TACK COAT) POUND	40800050 INCIDENTAL HOT-MIX ASPHALT SURFACING TON
TOWER ROAD	157+45.22	RT	SIDEROAD	550.7	61	28	6
WILLIAMS CREEK ROAD	236+34.94	LT	SIDEROAD	366.4	41	18	4
CENTER ROAD	264+25.91	LT	SIDEROAD	497.1	55	25	5
HUNTSVILLE ROAD	264+47.01	RT	SIDEROAD	697.1	77	35	8
FAIRVIEW ROAD	438+00.43	RT	SIDEROAD	654.1	73	33	7
LIBERTY ROAD	451+20.64	LT	SIDEROAD	636.5	71	32	7
IL 99	509+32.93	RT		1686.2	187	84	18
BLACKBURN BOTTOM LANE	515+48.09	RT	SIDEROAD	1433.7	159	72	16
GUINEA ROAD	528+20.07	LT	SIDEROAD	495.7	55	25	5
LOCAL ROAD	532+03.49	LT	SIDEROAD	857.8	95	43	9
STATE STREET	532+59.82	LT	SIDEROAD	362.8	40	18	4
CEMETARY ROAD	531+15.80	LT	SIDEROAD	239.7	27	12	3
CONGRESS STREET	536+93.26	RT	SIDEROAD	247.9	28	12	3
KENTUCKY STREET	540+60.77	RT	SIDEROAD	2875.7	320	144	31
CENTER RIDGE ROAD	583+07.88	LT	SIDEROAD	1215.2	135	61	13
WHITE OAK CEMETERY ROAD	647+56.18	RT	SIDEROAD	855.5	95	43	9
BAXTER HILL ROAD	688+95.03	LT	SIDEROAD	704.5	78	35	8
MULEY ROAD	728+25.95	RT	SIDEROAD	810.1	90	41	9
ENTRANCES (IL 101)	120+16.56	LT	PE	282.6	31	14	3
	139+73.72	RT	PE	399.6	44	20	4
	139+91.59	LT	PE	258.5	29	13	3
	167+59.38	LT	PARK ENTRANCE	1362.2	151	68	15
	216+20.87	LT	PE	372.5	41	19	4
	232+05.22	RT	PE	256.3	28	13	3
	234+92.34	LT	MAILBOX TURNOUT	303.4	34	15	3
	236+13.67	RT	PE	815.5	91	41	9
	236+85.94	LT	PE	202.2	22	10	2
	249+51.24	LT	PE	676.2	75	34	7
	262+73.19	LT	PE	618.0	69	31	7
	285+18.84	LT	PE	148.0	16	7	2
	318+93.30	LT	PE	349.6	39	17	4
	321+04.62	LT	PE	299.9	33	15	3
	322+26.67	LT	PE	155.7	17	8	2
	386+66.41	LT	PE	189.3	21	9	2
	449+02.22	LT	PE	284.5	32	14	3
	528+38.48	RT	PE	219.6	24	11	2
	531+70.16	RT	PE	358.0	40	18	4
	528+35.96	LT	PE	153.3	17	8	2
	528+39.79	RT	PE	228.9	25	11	2
	529+38.95	LT	MAILBOX TURNOUT	317.3	35	16	3
	530+41.05	LT	PE	170.3	19	9	2
	531+22.31	RT	PE	112.1	12	6	1
	532+64.07	LT	PE	318.1	35	16	3
	533+67.34	RT	PE	139.5	16	7	2
	534+87.21	RT	PE	146.6	16	7	2
	535+46.87	LT	MAILBOX TURNOUT	293.8	33	15	3
	538+33.32	RT	PARKING	498.1	55	25	5
	543+33.50	LT	MAILBOX TURNOUT	399.5	44	20	4
	543+87.64	LT	PE	164.5	18	8	2
	545+53.22	LT	MAILBOX TURNOUT	294.2	33	15	3
	554+85.42	RT	PE	276.4	31	14	3
	564+86.42	RT	PE	353.3	39	18	4
	607+55.73	LT	PE	220.8	25	11	2
	680+11.99	RT	MAILBOX TURNOUT	417.0	46	21	5
	680+72.51	LT	PE	250.2	28	13	3
	694+39.15	RT	FE	331.1	37	17	4
	703+44.14	RT	MAILBOX TURNOUT	294.0	33	15	3
	703+52.40	LT	PE	338.6	38	17	4
				TOTAL =	3162	1423	310

** MEASURED USING CADD

40600370 - LONGITUDINAL JOINT SEALANT

ROADWAY	STATION	OFFSET	SIDE	TO	STATION	OFFSET	SIDE	FOOT
IL 101	120+16.54	0.0	CL	-	141+95.12	0.0	CL	2179
	BRIDGE OMISSION: STATION 141+95.12 TO STATION 144+04.67							
	144+04.67	0.0	CL	-	342+05.42	0.0	CL	19801
	STATION EQUATION: STATION 342+05.42 BK = STATION 342+00.00 AH							
	342+00.00	0.0	CL	-	357+99.95	0.0	CL	1599.95
	STATION EQUATION: STATION 357+99.95 BK = STATION 358+16.96 AH							
	358+16.96	0.0	CL	-	533+31.46	0.0	CL	17514.5
	STATION EQUATION: STATION 533+31.46 BK = STATION 528+24.87 AH							
	528+24.87	0.0	CL	-	556+43.31	0.0	CL	2818
	BRIDGE OMISSION: STATION 556+43.31 TO STATION 562+31.71							
	562+31.71	0.0	CL	-	585+85.90	0.0	CL	2354
	CULVERT OMISSION: STATION 585+85.90 TO STATION 586+19.35							
	586+19.35	0.0	CL	-	643+93.37	0.0	CL	5774
	BRIDGE OMISSION: STATION 643+93.37 TO STATION 644+56.15							
	644+56.15	0.0	CL	-	730+41.13	0.0	CL	8585
							TOTAL	60625

SHORT TERM PAVEMENT MARKING & REMOVAL (2 APPLICATIONS, 1 REMOVAL)

ROADWAY	STATION	OFFSET	SIDE	TO	STATION	OFFSET	SIDE	70300100 SHORT TERM PAVEMENT MARKING FOOT	70300150 SHORT TERM PAVEMENT MARKING REMOVAL SQ FT
IL 101	120+16.54	0.0	CL	-	141+95.12	0.0	CL	436	72.6
	BRIDGE OMISSION: STATION 141+95.12 TO STATION 144+04.67								
	144+04.67	0.0	CL	-	342+05.42	0.0	CL	3960	660.0
	STATION EQUATION: STATION 342+05.42 BK TO STATION 342+00.00 AH								
	342+00.00	0.0	CL	-	357+99.95	0.0	CL	320	53.3
	STATION EQUATION: STATION 357+99.95 BK TO STATION 358+16.96 AH								
	358+16.96	0.0	CL	-	533+31.46	0.0	CL	3503	583.8
	508+11.76	11.1	RT	-	508+81.46	22.5	RT	14	2.3
	510+10.94	22.2	RT	-	511+10.09	11.6	RT	20	3.3
	STATION EQUATION: STATION 533+31.46 BK TO STATION 528+24.87 AH								
	528+24.87	0.0	CL	-	556+43.31	0.0	CL	564	93.9
	554+08.97	10.5	RT	-	556+43.43	10.4	RT	47	7.8
	554+08.92	10.9	LT	-	556+43.34	10.6	LT	47	7.8
	BRIDGE OMISSION: STATION 556+43.31 TO STATION 562+31.71								
	562+31.71	0.0	CL	-	643+93.37	0.4	CL	1632	272.1
	562+31.68	11.1	RT	-	564+54.33	10.9	RT	45	7.4
	562+31.68	10.6	LT	-	564+54.60	11.4	LT	45	7.4
	583+67.34	11.8	RT	-	585+55.83	11.8	RT	38	6.3
	586+49.05	11.9	RT	-	588+43.02	11.3	RT	39	6.5
	583+68.70	12.2	LT	-	585+55.86	12.0	LT	37	6.2
	586+49.35	12.4	LT	-	588+43.00	11.9	LT	39	6.5
	642+84.50	10.7	RT	-	643+88.02	11.2	RT	21	3.5
	644+50.39	11.4	RT	-	645+98.43	11.3	RT	30	4.9
	BRIDGE OMISSION: STATION 643+93.37 TO STATION 644+56.15								
	644+56.15	0.0	CL	-	730+41.13	6.0	LT	1717	286.2
							TOTAL	12551	2092

MODEL: Schedule 2 [Sheet]
FILE NAME: c:\pw_work\pwidot\castrosotov\d1106097\72762-sht-05-Schedules.dgn

USER NAME = Veronica.CastroSoto	DESIGNED -	REVISED -	
	DRAWN -	REVISED -	
	CHECKED -	REVISED -	
PLOT DATE = 12/5/2025	DATE -	REVISED -	

STATE OF ILLINOIS
DEPARTMENT OF TRANSPORTATION

SCHEDULE OF QUANTITIES

SCALE: | SHEET 2 OF 7 SHEETS | STA. | TO STA.

F.A.P RTE.	SECTION	COUNTY	TOTAL SHEETS	SHEET NO.
713	119RS-4, 120RS-5,CLV	SCHUYLER	56	18

CONTRACT NO. 72762

ILLINOIS | FED. AID PROJECT

GUTTER REPLACEMENT

ROADWAY	STATION	OFFSET	SIDE	TO	STATION	OFFSET	LENGTH	WIDTH	DEPTH	44000400 GUTTER REMOVAL	20200100 EARTH EXCAVATION	31101000 SUBBASE GRANULAR MATERIAL, TYPE B	60600095 CLASS SI CONCRETE (OUTLET)	60602500 CONCRETE GUTTER TYPE A
							FOOT	FOOT	FOOT	FOOT	CU YD	TON	CU YD	FOOT
IL 101	197+96.53	11.3	RT	-	198+70.79	11.4	74.3	3.0	0.58	74.3	7.8	8		74.3
	198+70.79	11.4	RT	-	199+17.43	11.4	46.6	5.7	0.58	46.6	4.9	9		46.6
	199+17.43	11.4	RT	-	199+54.95	11.4	37.5	3.0	0.58	37.5	3.9	4		37.5
	201+99.20	11.2	RT	-	202+35.18	11.2	36.0		0.58	36.0	3.8	6	3.53	
	202+35.18	11.2	RT	-	202+40.20	11.2	5.0	3.4	0.58	5.0	0.5	1		5.0
	336+00.22	11.1	RT	-	336+52.45	11.1	52.2	3.0	0.58	52.2	5.5	5		52.2
	336+52.45	11.1	RT	-	336+88.45	11.2	36.0		0.58	36.0	3.8	6	3.53	
	336+88.45	11.2	RT	-	338+00.25	11.3	111.8	3.0	0.58	111.8	11.7	12		111.8
	349+58.40	11.9	RT	-	349+87.36	11.7	29.0	5.0	0.58	29.0	3.0	5		29.0
	390+92.57	10.7	RT	-	391+28.52	10.8	35.9		0.58	35.9	3.8	6	3.53	
	391+28.52	10.8	RT	-	393+87.27	11.4	258.8	3.0	0.58	258.8	27.1	27		258.8
	393+87.27	11.4	RT	-	394+27.96	11.2	40.7	3.5	0.58	40.7	4.3	5		40.7
	402+96.59	11.3	RT	-	403+67.89	11.4	71.3	3.0	0.58	71.3	7.5	7		71.3
	404+85.82	11.5	RT	-	405+13.40	11.3	27.6	3.0	0.58	27.6	2.9	3		27.6
	405+13.40	11.3	RT	-	405+49.40	11.3	36.0		0.58	36.0	3.8	6	3.53	
	719+20.95	22.4	RT	-	719+32.35	18.0	11.4	4.3	0.58	11.4	1.2	2		11.4
	335+99.79	11.4	LT	-	336+18.50	11.4	18.7	3.0	0.58	18.7	2.0	2		18.7
	336+18.50	11.4	LT	-	336+54.50	11.5	36.0		0.58	36.0	3.8	6	3.53	
	336+54.50	11.5	LT	-	337+99.78	11.4	145.3	3.0	0.58	145.3	15.2	15		145.3
	349+58.58	11.2	LT	-	349+92.64	11.3	34.1	5.0	0.58	34.1	3.6	6		34.1
	391+40.96	11.7	LT	-	392+50.96	11.6	110.0	3.0	0.58	110.0	11.5	11		110.0
	399+43.11	10.8	LT	-	399+79.11	11.0	36.0		0.58	36.0	3.8	6	3.53	
	400+68.24	11.2	LT	-	402+18.24	11.7	150.0	3.0	0.58	150.0	15.7	15		150.0
	402+25.20	11.7	LT	-	402+85.20	11.5	60.0	3.0	0.58	60.0	6.3	6		60.0
	403+52.22	11.3	LT	-	404+06.22	11.2	54.0	3.0	0.58	54.0	5.7	6		54.0
	538+47.42	13.0	LT	-	538+77.71	13.2	30.3	10.0	0.58	30.3	3.2	10		30.3
	538+77.71	13.2	LT	-	539+58.83	16.2	81.1	3.0	0.58	81.1	8.5	8		81.1
	539+58.83	16.2	LT	-	539+94.12	18.0	35.3	10.0	0.58	35.3	3.7	12		35.3
	539+94.12	18.0	LT	-	540+77.78	17.7	83.7	3.0	0.58	83.7	8.8	9		83.7
	540+77.78	17.7	LT	-	541+14.65	14.9	36.9	10.0	0.58	36.9	3.9	13		36.9
	541+14.65	14.9	LT	-	541+48.48	11.4	33.8	3.0	0.58	33.8	3.5	3		33.8
	541+48.48	11.4	LT	-	541+84.49	10.7	36.0		0.58	36.0	3.8	6	3.53	
	651+93.11	10.8	LT	-	652+29.11	10.8	36.0		0.58	36.0	3.8	6	3.53	
	652+29.11	10.8	LT	-	652+42.83	10.8	13.7	3.0	0.58	13.7	1.4	1		13.7
									TOTAL	1941	203	250	28	1653

RIPRAP & FILTER FABRIC

LOCATION	STATION	TO	STATION	SIDE	LENGTH	WIDTH	AREA	DEPTH	AREA TOTAL	28100205 STONE RIPRAP CLASS A3	28100207 STONE RIPRAP CLASS A4	28200200 FILTER FABRIC
					FOOT	FOOT	SQ FT	INCH	CU FT	TON	TON	SQ YD
IL 101	129+21.91	-	129+44.99	LT	25.0	10.0	250.0	8	166.7	6.2		
	149+13.70	-	149+21.65	LT	10.0	10.0	100.0	8	66.7	2.5		
	179+44.79	-	179+67.26	LT	20.0	25.0	500.0	8	333.3		12.3	37.0
	296+61.95	-	296+79.00	LT	20.0	10.0	200.0	36	600.0	22.2		
	358+09.45	-	358+21.43	LT	15.0	10.0	150.0	12	150.0	5.6		
	391+37.41	-	391+50.18	LT	15.0	10.0	150.0	24	300.0	11.1		
	640+44.27	-	640+63.26	LT	20.0	8.0	160.0	8	106.7	4.0		
	656+59.49	-	656+75.25	LT	20.0	10.0	200.0	8	133.3	4.9		
	129+05.04	-	130+26.27	RT	125.0	10.0	1250.0	8	833.3	30.9		
	149+44.88	-	149+45.35	RT	10.0	10.0	100.0	8	66.7	2.5		
	179+70.16	-	179+89.35	RT	25.0	17.0	425.0	8	283.3		10.5	31.5
	332+63.26	-	332+79.22	RT	20.0	10.0	200.0	36	600.0	22.2		
	348+69.85	-	348+85.92	RT	20.0	20.0	400.0	60	2000.0	74.1		
	352+37.18	-	352+50.37	RT	20.0	20.0	400.0	36	1200.0	44.4		
	627+42.23	-	627+58.77	RT	20.0	10.0	200.0	8	133.3	4.9		
	719+04.07	-	719+22.51	RT	20.0	8.0	160.0	8	106.7	4.0		
									TOTAL	239	23	69

MODEL: Schedule 3 [Sheet]
FILE NAME: c:\pw_work\pwidot\castrosotov\d1106097\72762-sht-05- Schedules.dgn

USER NAME = Veronica.CastroSoto	DESIGNED -	REVISED -	STATE OF ILLINOIS DEPARTMENT OF TRANSPORTATION
	DRAWN -	REVISED -	
	CHECKED -	REVISED -	
PLOT DATE = 12/5/2025	DATE -	REVISED -	

SCHEDULE OF QUANTITIES

SCALE: SHEET 3 OF 7 SHEETS STA. TO STA.

F.A.P RTE.	SECTION	COUNTY	TOTAL SHEETS	SHEET NO.
713	119RS-4, 120RS-5,CLV	SCHUYLER	56	19

CONTRACT NO. 72762

ILLINOIS FED. AID PROJECT

PAVEMENT MARKINGS - PAGE 1 OF 2

ROADWAY	STATION	OFFSET	SIDE	TO	STATION	OFFSET	SIDE	TYPE AND COLOR	78009005 MODIFIED URETHANE PAVEMENT MARKING LINE 5" FOOT	78009024 MODIFIED URETHANE PAVEMENT MARKING LINE 24" FOOT
IL 101	120+16.59	10.0	RT	-	141+95.25	11.8	RT	SOLID EDGE LINE - WHITE	2179	
	BRIDGE OMISSION: STATION 141+95.12 TO STATION 144+04.67									
	144+04.70	11.6	RT	-	155+63.00	10.5	RT	SOLID EDGE LINE - WHITE	1158	
	156+04.49	10.7	RT	-	157+01.21	10.5	RT	SOLID EDGE LINE - WHITE	97	
	157+72.85	10.0	RT	-	209+05.22	10.2	RT	SOLID EDGE LINE - WHITE	5132	
	209+55.34	10.2	RT	-	264+04.40	10.0	RT	SOLID EDGE LINE - WHITE	5449	
	264+86.89	10.7	RT	-	342+05.42	10.0	RT	SOLID EDGE LINE - WHITE	7719	
	STATION EQUATION: STATION 342+05.42 BK = STATION 342+00.00 AH									
	342+00.00	10.0	RT	-	357+99.95	10.4	RT	SOLID EDGE LINE - WHITE	1600	
	STATION EQUATION: STATION 357+99.95 BK TO STATION 358+16.96 AH									
	358+16.96	10.4	RT	-	437+59.36	10.1	RT	SOLID EDGE LINE - WHITE	7942	
	438+38.28	10.1	RT	-	508+83.38	22.5	RT	SOLID EDGE LINE - WHITE	7045	
	510+07.24	22.2	RT	-	513+98.55	10.1	RT	SOLID EDGE LINE - WHITE	391	
	516+03.63	10.2	RT	-	533+31.46	10.0	RT	SOLID EDGE LINE - WHITE	1728	
	STATION EQUATION: STATION 533+31.46 BK TO STATION 528+24.87 AH									
	528+24.87	10.0	RT	-	536+75.76	10.0	RT	SOLID EDGE LINE - WHITE	851	
	537+09.25	10.7	RT	-	540+06.73	10.2	RT	SOLID EDGE LINE - WHITE	297	
	540+75.57	10.2	RT	-	553+30.90	10.0	RT	SOLID EDGE LINE - WHITE	1255	
	553+75.16	9.0	RT	-	556+43.43	10.0	RT	SOLID EDGE LINE - WHITE	268	
	BRIDGE OMISSION: STATION 556+43.31 TO STATION 562+31.70									
	562+31.68	10.0	RT	-	643+88.52	10.0	RT	SOLID EDGE LINE - WHITE	8157	
	BRIDGE OMISSION: STATION 643+93.80 TO STATION 644+56.15									
	644+50.91	10.4	RT	-	646+95.01	10.2	RT	SOLID EDGE LINE - WHITE	244	
	648+06.86	10.3	RT	-	727+84.14	9.8	RT	SOLID EDGE LINE - WHITE	7977	
	728+51.76	10.0	RT	-	730+40.95	10.0	RT	SOLID EDGE LINE - WHITE	189	
	120+60.84	10.0	LT	-	141+95.23	11.2	LT	SOLID EDGE LINE - WHITE	2134	
	BRIDGE OMISSION: STATION 141+95.12 TO STATION 144+04.67									
	144+04.69	11.0	LT	-	167+28.20	10.4	LT	SOLID EDGE LINE - WHITE	2324	
	167+90.55	10.0	LT	-	236+11.40	10.2	LT	SOLID EDGE LINE - WHITE	6821	
	236+58.28	10.4	LT	-	263+79.81	10.0	LT	SOLID EDGE LINE - WHITE	2722	
	264+45.91	10.0	LT	-	342+05.42	11.0	LT	SOLID EDGE LINE - WHITE	7760	
	STATION EQUATION: STATION 342+05.42 BK = STATION 342+00.00 AH									
	342+00.00	11.0	LT		357+99.95		LT	SOLID EDGE LINE WHITE	1600	
	STATION EQUATION: STATION 357+99.95 BK = STATION 358+16.96 AH									
	358+16.96	10.0	LT	-	450+87.93	10.4	LT	SOLID EDGE LINE - WHITE	9271	
	451+40.46	10.6	LT	-	528+08.11	11.0	LT	SOLID EDGE LINE - WHITE	7668	
	528+54.36	12.0	LT	-	531+51.52	10.4	LT	SOLID EDGE LINE - WHITE	297	
	532+15.47	10.6	LT	-	532+49.57	10.5	LT	SOLID EDGE LINE - WHITE	34	
	532+96.60	10.3	LT	-	533+31.46	10.7	LT	SOLID EDGE LINE - WHITE	35	
	STATION EQUATION: STATION 533+31.46 BK = STATION 528+24.87 AH									
	528+24.87	10.7	LT	-	530+95.95	9.6	LT	SOLID EDGE LINE - WHITE	271	
	531+39.15	10.1	LT	-	556+43.34	10.4	LT	SOLID EDGE LINE - WHITE	2504	
	BRIDGE OMISSION: STATION 556+43.31 TO STATION 562+31.70									
	562+31.68	9.6	LT	-	582+79.61	11.4	LT	SOLID EDGE LINE - WHITE	2048	
	583+40.72	12.0	LT	-	643+98.94	10.0	LT	SOLID EDGE LINE - WHITE	6058	
	BRIDGE OMISSION: STATION 643+93.80 TO STATION 644+56.15									
	644+62.62	11.4	LT	-	688+52.70	10.0	LT	SOLID EDGE LINE - WHITE	4390	
	689+44.75	10.0	LT	-	730+40.92	10.2	LT	SOLID EDGE LINE - WHITE	4096	
	120+16.54	0.0	CL	-	126+91.75	0.0	CL	SOLID DOUBLE LINE - YELLOW	1350	
	126+91.75	0.5	LT	-	137+82.82	0.5	LT	SOLID NO PASSING - YELLOW	1091	
	126+91.75	0.0	CL	-	141+95.12	0.0	CL	10' DASH 30' SKIP - YELLOW	376	
	140+34.97	0.5	RT	-	141+95.12	0.5	RT	SOLID NO PASSING - YELLOW	160	
	BRIDGE OMISSION: STATION 141+95.12 TO STATION 144+04.67									
	144+04.67	0.5	RT	-	153+71.84	0.5	RT	SOLID NO PASSING - YELLOW	967	
	144+04.67	0.0	CL	-	153+71.84	0.0	CL	10' DASH 30' SKIP - YELLOW	242	
	153+71.84	0.0	CL	-	167+52.51	0.0	CL	SOLID DOUBLE LINE - YELLOW	2761	
	167+52.51	0.5	LT	-	177+38.38	0.5	LT	SOLID NO PASSING - YELLOW	986	
	167+52.51	0.0	CL	-	189+09.59	0.0	CL	10' DASH 30' SKIP - YELLOW	539	
	178+49.57	0.5	RT	-	189+09.59	0.5	RT	SOLID NO PASSING - YELLOW	1060	
	189+09.59	0.0	CL	-	191+07.16	0.0	CL	SOLID DOUBLE LINE - YELLOW	395	
	191+07.16	0.0	CL	-	245+72.00	0.0	CL	10' DASH 30' SKIP - YELLOW	1366	
	191+07.16	0.5	LT	-	201+33.02	0.5	LT	SOLID NO PASSING - YELLOW	1026	
	201+33.02	0.5	RT	-	213+54.00	0.5	RT	SOLID NO PASSING - YELLOW	1221	
	213+54.00	0.5	LT	-	224+15.94	0.5	LT	SOLID NO PASSING - YELLOW	1062	
								TOTAL	134315	0

MODEL: Schedule 4 [Sheet]
FILE NAME: c:\pw_work\pwidot\castrosotov\d1106097\72762-sh-05-Schedules.dgn

USER NAME = Veronica.CastroSoto	DESIGNED -	REVISED -	STATE OF ILLINOIS DEPARTMENT OF TRANSPORTATION
	DRAWN -	REVISED -	
	CHECKED -	REVISED -	
PLOT DATE = 12/5/2025	DATE -	REVISED -	

SCHEDULE OF QUANTITIES

SCALE: | SHEET 4 OF 7 SHEETS | STA. TO STA.

F.A.P RTE.	SECTION	COUNTY	TOTAL SHEETS	SHEET NO.
713	119RS-4, 120RS-5,CLV	SCHUYLER	56	20

CONTRACT NO. 72762

ILLINOIS | FED. AID PROJECT

PAVEMENT MARKINGS - PAGE 2 OF 2

ROADWAY	STATION	OFFSET	SIDE	TO	STATION	OFFSET	SIDE	TYPE AND COLOR	78009005 MODIFIED URETHANE PAVEMENT MARKING LINE 5" FOOT	78009024 MODIFIED URETHANE PAVEMENT MARKING LINE 24" FOOT
IL 101	236+98.73	0.5	RT	-	245+72.00	0.5	RT	SOLID NO PASSING - YELLOW	873	
	245+72.00	0.0	CL	-	252+08.01	0.0	CL	SOLID DOUBLE LINE - YELLOW	1272	
	252+08.01	0.5	LT	-	259+93.85	0.5	LT	SOLID NO PASSING - YELLOW	786	
	252+08.01	0.0	CL	-	259+93.85	0.0	CL	10' DASH 30' SKIP - YELLOW	196	
	259+93.85	0.0	CL	-	292+57.59	0.0	CL	SOLID DOUBLE LINE - YELLOW	6527	
	292+57.59	0.0	CL	-	308+52.13	0.0	CL	10' DASH 30' SKIP - YELLOW	399	
	292+57.59	0.5	LT	-	300+03.32	0.5	LT	SOLID NO PASSING - YELLOW	746	
	303+73.58	0.5	RT	-	308+52.13	0.5	RT	SOLID NO PASSING - YELLOW	479	
	308+52.13	0.0	CL	-	322+68.62	0.0	CL	SOLID DOUBLE LINE - YELLOW	2833	
	322+68.62	0.5	LT	-	332+41.00	0.5	LT	SOLID NO PASSING - YELLOW	972	
	322+68.62	0.0	CL	-	339+33.13	0.0	CL	10' DASH 30' SKIP - YELLOW	416	
	334+95.29	0.5	RT	-	339+33.13	0.5	RT	SOLID NO PASSING - YELLOW	438	
	339+33.13	0.0	CL	-	342+05.42	0.0	CL	SOLID DOUBLE LINE - YELLOW	545	
	STATION EQUATION: STATION 342+05.42 BK TO STATION 342+00.00 AH									
	342+00.00	0.0	CL	-	342+69.27	0.0	CL	SOLID DOUBLE LINE - YELLOW	139	
	342+69.27	0.5	LT	-	349+06.72	0.5	LT	SOLID NO PASSING - YELLOW	637	
	342+69.27	0.0	CL	-	357+99.95	0.0	CL	10' DASH 30' SKIP - YELLOW	383	
	350+90.22	0.5	RT	-	357+99.95	0.5	RT	SOLID NO PASSING - YELLOW	710	
	STATION EQUATION: STATION 357+99.95 BK = STATION 358+16.96 AH									
	358+16.96	0.0	CL	-	360+68.28	0.0	CL	10' DASH 30' SKIP - YELLOW	63	
	358+16.96	0.5	RT	-	360+68.28	0.5	RT	SOLID NO PASSING - YELLOW	251	
	360+68.28	0.0	CL	-	363+04.01	0.0	CL	SOLID DOUBLE LINE - YELLOW	471	
	363+04.01	0.5	LT	-	370+83.39	0.5	LT	SOLID NO PASSING - YELLOW	779	
	363+04.01	0.0	CL	-	381+38.59	0.0	CL	10' DASH 30' SKIP - YELLOW	459	
	376+04.20	0.5	RT	-	381+38.59	0.5	RT	SOLID NO PASSING - YELLOW	534	
	381+38.59	0.0	CL		389+19.99	0.0	CL	SOLID DOUBLE LINE YELLOW	1563	
	389+19.99	0.0	CL	-	407+70.80	0.0	CL	10' DASH 30' SKIP - YELLOW	463	
	389+19.99	0.5	LT	-	397+85.00	0.5	LT	SOLID NO PASSING - YELLOW	865	
	397+85.00	0.5	RT	-	407+70.80	0.5	RT	SOLID NO PASSING - YELLOW	986	
	407+70.80	0.0	CL	-	412+84.39	0.0	CL	SOLID DOUBLE LINE - YELLOW	1027	
	412+84.39	0.5	LT	-	425+99.94	0.5	LT	SOLID NO PASSING - YELLOW	1316	
	412+84.39	0.0	CL	-	505+45.76	0.0	CL	10' DASH 30' SKIP - YELLOW	2315	
	504+28.62	0.5	RT	-	505+45.76	0.5	RT	SOLID NO PASSING - YELLOW	117	
	505+45.76	0.0	CL	-	533+31.46	0.0	CL	SOLID DOUBLE LINE - YELLOW	5571	
	STATION EQUATION: STATION 533+31.46 BK = STATION 528+24.87 AH									
	528+24.87	0.0	CL	-	546+73.49	0.0	CL	SOLID DOUBLE LINE - YELLOW	3697	
	546+73.49	0.5	LT	-	556+43.31	0.5	LT	SOLID NO PASSING - YELLOW	970	
	546+73.49	0.0	CL	-	556+43.31	0.0	CL	10' DASH 30' SKIP - YELLOW	242	
	BRIDGE OMISSION: STATION 556+43.31 TO STATION 562+31.70									
	562+31.70	0.5	LT	-	564+72.16	0.5	LT	SOLID NO PASSING - YELLOW	240	
	562+31.70	0.0	CL	-	643+93.80	0.0	CL	10' DASH 30' SKIP - YELLOW	2041	
	603+18.20	0.5	RT	-	611+89.44	0.5	RT	SOLID NO PASSING - YELLOW	871	
	611+89.44	0.5	LT	-	621+76.14	0.5	LT	SOLID NO PASSING - YELLOW	987	
	626+25.46	0.5	RT	-	635+73.30	0.5	RT	SOLID NO PASSING - YELLOW	948	
	635+73.30	0.5	LT	-	643+93.80	0.5	LT	SOLID NO PASSING - YELLOW	821	
	BRIDGE OMISSION: STATION 643+93.80 TO STATION 644+56.15									
	644+56.15	0.5	LT	-	646+15.48	0.5	LT	SOLID NO PASSING - YELLOW	159	
	644+56.15	0.0	CL	-	646+15.48	0.0	CL	10' DASH 30' SKIP - YELLOW	40	
	646+15.48	0.0	CL	-	669+26.49	0.0	CL	SOLID DOUBLE LINE - YELLOW	4622	
	669+26.49	0.0	CL	-	676+08.52	0.0	CL	10' DASH 30' SKIP - YELLOW	171	
	669+26.49	0.5	LT	-	676+08.52	0.5	LT	SOLID NO PASSING - YELLOW	682	
	676+08.52	0.0	CL	-	680+49.82	0.0	CL	SOLID DOUBLE LINE - YELLOW	883	
	680+49.82	0.0	CL	-	687+71.66	0.0	CL	10' DASH 30' SKIP - YELLOW	180	
	680+49.82	0.5	RT	-	687+71.66	0.5	RT	SOLID NO PASSING - YELLOW	722	
	687+71.66	0.0	CL	-	696+01.26	0.0	CL	SOLID DOUBLE LINE - YELLOW	1659	
	696+01.26	0.0	CL	-	725+55.59	0.0	CL	10' DASH 30' SKIP - YELLOW	739	
	696+01.26	0.5	LT	-	704+26.51	0.5	LT	SOLID NO PASSING - YELLOW	825	
	717+61.95	0.5	RT	-	725+55.59	0.5	RT	SOLID NO PASSING - YELLOW	794	
	725+55.59	0.0	CL	-	728+99.28	0.0	CL	SOLID DOUBLE LINE - YELLOW	687	
	728+99.28	0.5	LT	-	730+41.12	0.5	LT	SOLID NO PASSING - YELLOW	142	
	728+99.28	0.0	CL	-	730+41.12	0.0	CL	10' DASH 30' SKIP - YELLOW	35	
ENTRANCE TO WEINBER-KING STATE FISH AND WILDLIFE AREA	167+62.74	39.0	LT	-	-	-	-	STOP BAR - WHITE		15
	167+62.74	39.2	LT	-	-	-	-	SOLID NO PASSING - YELLOW	10	
								TOTAL	58298	15
								COMBINED TOTALS	**192613**	**15**

MODEL: Schedule 5 [Sheet]
FILE NAME: c:\pw_work\pwidot\castrosotov\d1106097\72762-sh-05-Schedules.dgn

USER NAME = Veronica.CastroSoto	DESIGNED -	REVISED -	
	DRAWN -	REVISED -	
	CHECKED -	REVISED -	
PLOT DATE = 12/5/2025	DATE -	REVISED -	

STATE OF ILLINOIS
DEPARTMENT OF TRANSPORTATION

SCHEDULE OF QUANTITIES

SCALE: | SHEET 5 OF 7 SHEETS | STA. TO STA.

F.A.P RTE.	SECTION	COUNTY	TOTAL SHEETS	SHEET NO.
713	119RS-4, 120RS-5,CLV	SCHUYLER	56	21

CONTRACT NO. 72762

ILLINOIS | FED. AID PROJECT

48102100 - AGGREGATE WEDGE SHOULDER, TYPE B (PAGE 1 OF 2)

ROADWAY	STATION	SIDE	TO	STATION	SIDE	AREA SQ FT	LENGTH FEET	CUBIC YARD	TON
IL 101	120+54.65	LT	-	122+03.48	LT	0.188	148.83	1.03	2
	129+01.74	LT	-	139+75.25	LT	0.188	1073.51	7.45	12
	157+01.03	LT	-	167+32.15	LT	0.188	1031.12	7.16	11
	167+87.93	LT	-	179+93.45	LT	0.188	1205.52	8.37	13
	213+51.82	LT	-	215+95.21	LT	0.188	243.39	1.69	3
	216+51.29	LT	-	234+67.82	LT	0.188	1816.53	12.61	20
	235+16.31	LT	-	236+16.14	LT	0.188	99.83	0.69	1
	236+56.12	LT	-	236+71.62	LT	0.188	15.50	0.11	0
	237+01.18	LT	-	249+19.59	LT	0.188	1218.41	8.46	14
	249+84.81	LT	-	262+43.12	LT	0.188	1258.31	8.74	14
	263+07.27	LT	-	263+85.12	LT	0.188	77.85	0.54	1
	264+43.45	LT	-	269+44.10	LT	0.188	500.65	3.48	6
	283+86.69	LT	-	285+08.36	LT	0.188	121.67	0.84	1
	285+30.34	LT	-	297+01.90	LT	0.188	1171.56	8.14	13
	310+90.81	LT	-	318+73.82	LT	0.188	783.01	5.44	9
	319+11.23	LT	-	320+88.56	LT	0.188	177.33	1.23	2
	321+20.85	LT	-	322+14.68	LT	0.188	93.83	0.65	1
	322+37.33	LT	-	327+11.28	LT	0.188	473.95	3.29	5
	362+42.57	LT	-	386+53.99	LT	0.188	2411.42	16.75	27
	413+21.55	LT	-	448+88.82	LT	0.188	3567.27	24.77	40
	449+20.46	LT	-	450+95.80	LT	0.188	175.34	1.22	2
	451+37.69	LT	-	528+13.39	LT	0.188	7675.70	53.30	85
	528+54.40	LT	-	531+52.46	LT	0.188	298.06	2.07	3
	532+07.98	LT	-	532+51.70	LT	0.188	43.72	0.30	0
	532+93.46	LT	-	533+31.46	LT	0.188	38.00	0.26	0
	STATION EQUATION: STATION 533+31.46 BK = STATION 528+24.87 AH								
	528+24.87	LT	-	528+26.23	LT	0.188	1.36	0.01	0
	528+48.44	LT	-	529+12.94	LT	0.188	64.50	0.45	1
	529+63.85	LT	-	530+30.68	LT	0.188	66.83	0.46	1
	530+53.50	LT	-	531+00.22	LT	0.188	46.72	0.32	1
	531+35.71	LT	-	532+33.56	LT	0.188	97.85	0.68	1
	532+84.52	LT	-	535+19.47	LT	0.188	234.95	1.63	3
	535+69.04	LT	-	537+34.64	LT	0.188	165.60	1.15	2
	541+85.20	LT	-	542+00.34	LT	0.188	15.14	0.11	0
	543+58.83	LT	-	543+75.34	LT	0.188	16.51	0.11	0
	543+97.75	LT	-	545+31.61	LT	0.188	133.86	0.93	1
								TOTAL	295

48102100 - AGGREGATE WEDGE SHOULDER, TYPE B (PAGE 2 OF 2)

ROADWAY	STATION	SIDE	TO	STATION	SIDE	AREA SQ FT	LENGTH FEET	CUBIC YARD	TON
IL 101	545+73.50	LT	-	546+91.75	LT	0.188	118.25	0.82	1
	564+54.69	LT	-	570+33.44	LT	0.188	578.75	4.02	6
	571+22.98	LT	-	582+82.32	LT	0.188	1159.34	8.05	13
	583+31.41	LT	-	583+68.87	LT	0.188	37.46	0.26	0
	588+43.00	LT	-	607+39.72	LT	0.188	1896.72	13.17	21
	607+72.17	LT	-	627+75.80	LT	0.188	2003.63	13.91	22
	645+98.13	LT	-	651+92.20	LT	0.188	594.07	4.13	7
	665+92.53	LT	-	680+55.20	LT	0.188	1462.67	10.16	16
	680+91.78	LT	-	688+57.75	LT	0.188	765.97	5.32	9
	689+43.89	LT	-	703+28.00	LT	0.188	1384.11	9.61	15
	703+77.57	LT	-	717+71.31	LT	0.188	1393.74	9.68	15
	724+94.57	LT	-	730+40.80	LT	0.188	546.23	3.79	6
	128+87.64	RT	-	139+51.38	RT	0.188	1063.74	7.39	12
	157+67.96	RT	-	180+03.25	RT	0.188	2235.29	15.52	25
	213+52.60	RT	-	231+86.89	RT	0.188	1834.29	12.74	20
	232+24.17	RT	-	235+54.48	RT	0.188	330.31	2.29	4
	236+72.22	RT	-	264+10.25	RT	0.188	2738.03	19.01	30
	264+82.78	RT	-	271+15.02	RT	0.188	632.24	4.39	7
	290+05.63	RT	-	297+42.36	RT	0.188	736.73	5.12	8
	310+89.02	RT	-	327+11.83	RT	0.188	1622.81	11.27	18
	362+42.33	RT	-	388+01.39	RT	0.188	2559.06	17.77	28
	412+61.86	RT	-	437+65.66	RT	0.188	2503.80	17.39	28
	438+33.03	RT	-	508+11.99	RT	0.188	6978.96	48.47	78
	511+09.94	RT	-	514+42.10	RT	0.188	332.16	2.31	4
	516+00.43	RT	-	528+22.43	RT	0.188	1222.00	8.49	14
	528+55.19	RT	-	531+43.20	RT	0.188	288.01	2.00	3
	531+96.91	RT	-	533+29.72	RT	0.188	132.81	0.92	1
	528+56.44	RT	-	531+13.44	RT	0.188	257.00	1.78	3
	531+29.87	RT	-	533+57.70	RT	0.188	227.83	1.58	3
	533+77.99	RT	-	534+77.96	RT	0.188	99.97	0.69	1
	534+96.73	RT	-	536+77.13	RT	0.188	180.40	1.25	2
	537+06.60	RT	-	538+04.70	RT	0.188	98.10	0.68	1
	538+69.84	RT	-	539+23.06	RT	0.188	53.22	0.37	1
	541+78.31	RT	-	542+13.41	RT	0.188	35.10	0.24	0
	564+54.03	RT	-	564+76.06	RT	0.188	22.03	0.15	0
	564+96.44	RT	-	570+09.76	RT	0.188	513.32	3.56	6
	571+42.78	RT	-	583+67.17	RT	0.188	1224.39	8.50	14
	588+43.02	RT	-	627+75.60	RT	0.188	3932.58	27.31	44
	645+97.31	RT	-	646+96.12	RT	0.188	98.81	0.69	1
	648+02.07	RT	-	651+93.06	RT	0.188	390.99	2.72	4
	664+68.64	RT	-	679+78.03	RT	0.188	1509.39	10.48	17
	680+50.37	RT	-	694+04.96	RT	0.188	1354.59	9.41	15
	694+65.89	RT	-	703+21.30	RT	0.188	855.41	5.94	10
	703+66.45	RT	-	719+39.99	RT	0.188	1573.54	10.93	17
	724+94.07	RT	-	727+87.14	RT	0.188	293.07	2.04	3
	728+45.43	RT	-	730+41.04	RT	0.188	195.61	1.36	2
								TOTAL	556
								COMBINED TOTALS	**851**

PAVEMENT SCHEDULE FOR STAGING SN 085-2013

ROADWAY	STA	TO	STA	SIDE	LENGTH (FOOT)	WIDTH (FOOT)	44004250 PAVED SHOULDER REMOVAL (SQ YD)	20200500 EARTH EXCAVATION (WIDENING) (CU YD)	35600708 HOT-MIX ASPHALT BASE COURSE WIDENING 8" (SQ YD)	X4811900 AGGREGATE SHOULDERS (SPECIAL) (TON)	44000100 PAVEMENT REMOVAL (SQ YD)	42000070 PAVEMENT CONNECTOR (HMA) FOR BRIDGE APPROACH SLAB (SQ YD)
IL 101	585+49.00	-	585+59.00	LT	10	12					13.3	13.3
	585+59.00	-	585+69.00	LT	10	12					13.3	
	585+49.00	-	585+59.00	RT	10	12					13.3	13.3
	585+59.00	-	585+69.00	RT	10	12					13.3	
	586+43.00	-	586+53.00	LT	10	12					13.3	13.3
	586+53.00	-	586+63.00	LT	10	12					13.3	
	586+43.00	-	586+53.00	RT	10	12					13.3	13.3
	586+53.00	-	586+63.00	RT	10	12					13.3	
	584+16.00	-	585+77.00	LT	161	VARIES	53.7					
	586+35.00	-	587+80.00	LT	145	VARIES	48.3					
	583+69.00	-	585+77.00	LT	208	6		18.9	138.7			
	586+35.00	-	588+43.00	LT	208	6		20.1	138.7			
	583+69.00	-	585+59.00	RT	190	6		28.1	126.7			
	585+59.00	-	585+77.00	RT	18	6	12.0	2.7	12.0			
	586+35.00	-	586+53.00	RT	18	6	12.0	2.7	12.0			
	586+53.00	-	588+43.00	RT	190	6		28.1	126.7			
	583+69.00	-	585+55.00	LT	186	3				8.3		
	583+69.00	-	585+55.00	RT	186	3				8.3		
	586+57.00	-	588+43.00	LT	186	3				8.3		
	586+57.00	-	588+43.00	RT	186	3				8.3		
						TOTALS	126.0	100.6	554.7	33.1	106.7	53.3

GUARDRAIL SCHEDULE FOR SN 085-2013

ROADWAY	STATION	TO	STATION	SIDE	63200310 GUARDRAIL REMOVAL (FOOT)	50104000 BRIDGE RAIL REMOVAL (FOOT)	63100167 TRAFFIC BARRIER TERMINAL, TYPE 1 (SPECIAL) TANGENT (EACH)	72501000 TERMINAL MARKER - DIRECT APPLIED (EACH)	63000001 STEEL PLATE BEAM GUARDRAIL, TYPE A, 6 FOOT POSTS (FOOT)	63100087 TRAFFIC BARRIER TERMINAL, TYPE 6A (EACH)	50901050 STEEL RAILING, TYPE SM (FOOT)
IL 101	584+72.00	-	585+89.25	LT	117.25						
	585+89.25	-	586+22.75	LT		33.5					
	586+22.75	-	587+97.00	LT	174.25						
	584+06.00	-	585+89.25	RT	183.25						
	585+89.25	-	586+22.75	RT		33.5					
	586+22.75	-	587+34.00	RT	111.25						
	584+74.25	-	585+24.25	LT			1	1			
	585+24.25	-	585+36.75	LT					12.50		
	585+36.75	-	585+74.25	LT						1	
	585+74.25	-	586+37.75	LT							63.5
	586+37.75	-	586+75.25	LT						1	
	586+75.25	-	587+62.75	LT					87.50		
	587+62.75	-	588+12.75	LT			1	1			
	583+99.25	-	584+49.25	RT			1	1			
	584+49.25	-	585+36.75	RT					87.50		
	585+36.75	-	585+74.25	RT						1	
	585+74.25	-	586+37.75	RT							63.5
	586+37.75	-	586+75.25	RT						1	
	586+75.25	-	586+87.75	RT					12.50		
	586+87.75	-	587+37.75	RT			1	1			
				TOTAL	586	67	4	4	200	4	127

MODEL: Schedule 7 [Sheet]
FILE NAME: c:\pw_work\pwidot\castrosotov\d1106097\72762-sh-05-Schedules.dgn

USER NAME = Veronica.CastroSoto	DESIGNED -	REVISED -	STATE OF ILLINOIS DEPARTMENT OF TRANSPORTATION
	DRAWN -	REVISED -	
	CHECKED -	REVISED -	
PLOT DATE = 12/5/2025	DATE -	REVISED -	

SCHEDULE OF QUANTITIES

SCALE: | SHEET 7 OF 7 SHEETS | STA. | TO STA.

F.A.P RTE.	SECTION	COUNTY	TOTAL SHEETS	SHEET NO.
713	119RS-4, 120RS-5,CLV	SCHUYLER	56	23

CONTRACT NO. 72762

ILLINOIS | FED. AID PROJECT

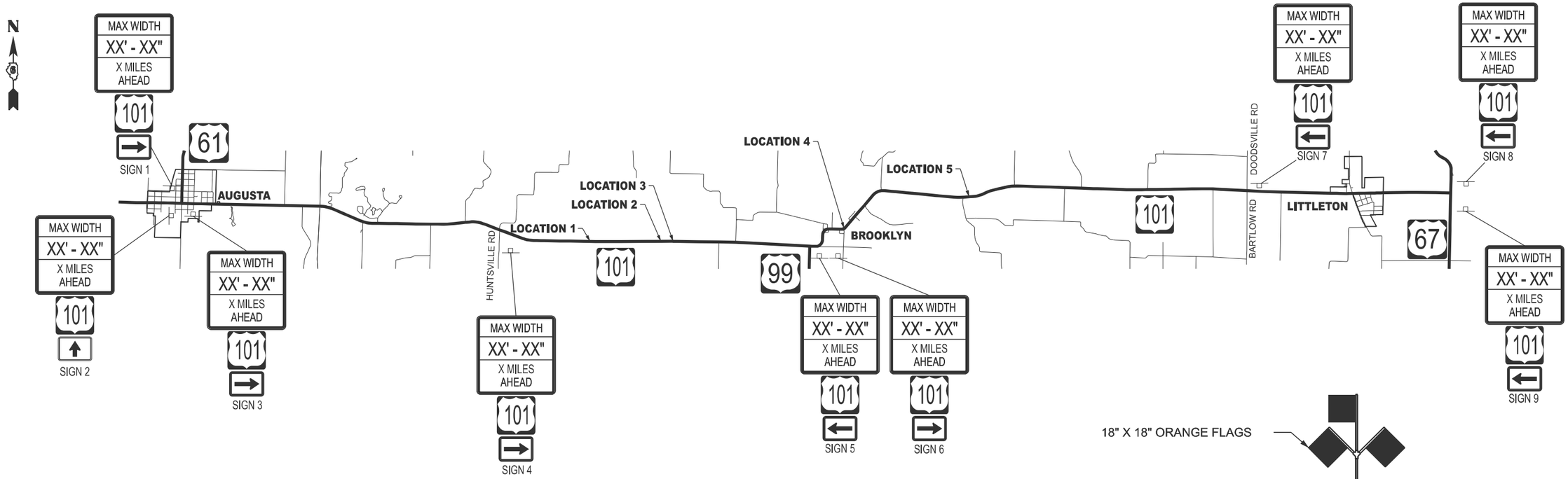

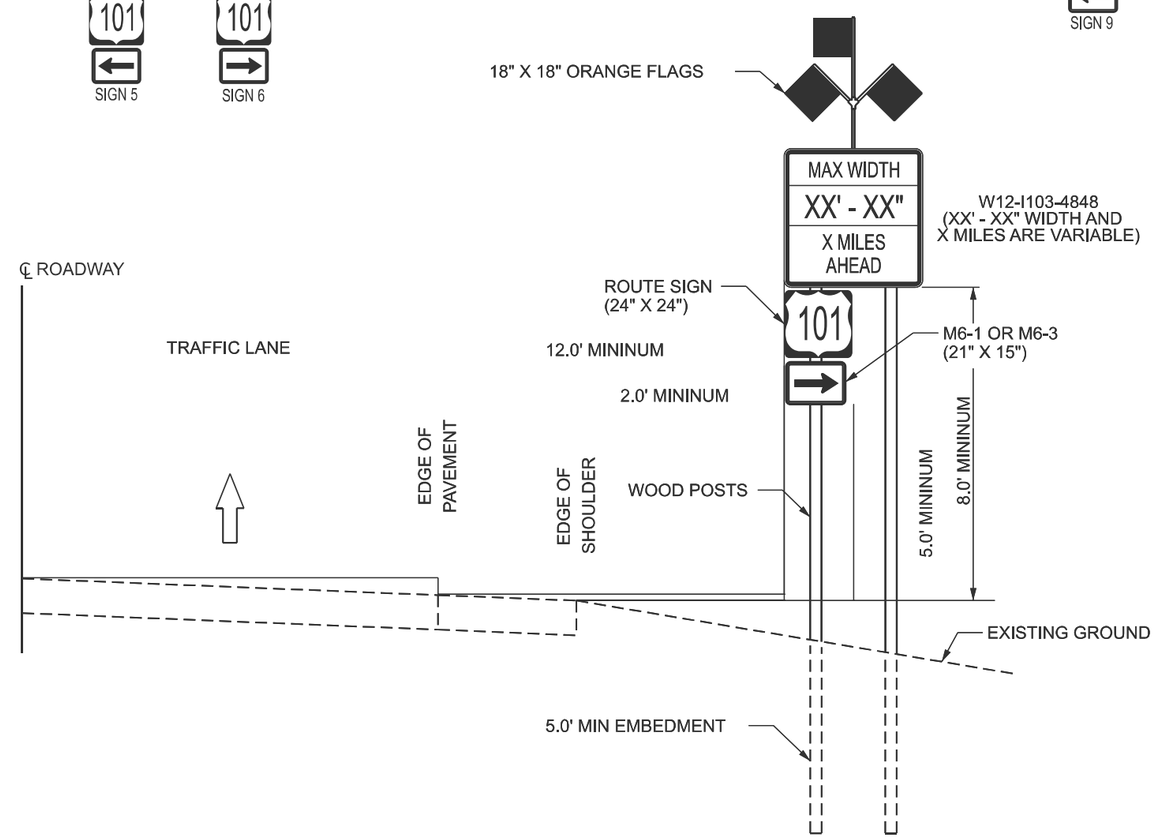

SIGN	MILES				
	LOCATION 1	LOCATION 2	LOCATION 3	LOCATION 4	LOCATION 5
1	6	7	7	10	12
2	6	7	7	10	12
3	6	7	7	10	12
4	1	2	3	5	7
5	3	2	2	NOT USED	NOT USED
6	NOT USED	NOT USED	NOT USED	1	3
7	10	9	9	6	4
8	13	12	12	9	7
9	13	12	12	9	7

WIDTH RESTRICTION SIGN
CONVENTIONAL ROADWAYS

MODEL: Width Restriction [Sheet]
FILE NAME: c:\pw_work\pwidot\castrosoto\d1106097\72762-sht-07A-Width Restriction.dgn

USER NAME = Veronica.CastroSoto	DESIGNED -	REVISED -	STATE OF ILLINOIS DEPARTMENT OF TRANSPORTATION
	DRAWN -	REVISED -	
	CHECKED -	REVISED -	
PLOT DATE = 1/12/2026	DATE -	REVISED -	

SIGNING DETAIL
WIDTH RESTRICTION SIGN PLACEMENT

SCALE: SHEET OF 1 SHEETS STA. TO STA.

F.A.P RTE.	SECTION	COUNTY	TOTAL SHEETS	SHEET NO.
713	119RS-4, 120RS-5,CLV	SCHUYLER	56	23A

CONTRACT NO. 72762

ILLINOIS FED. AID PROJECT

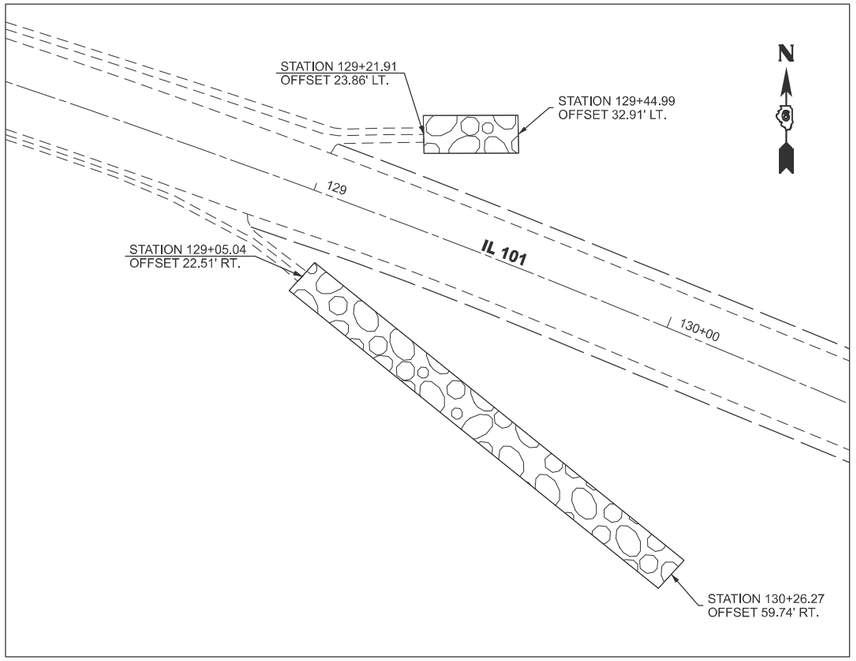

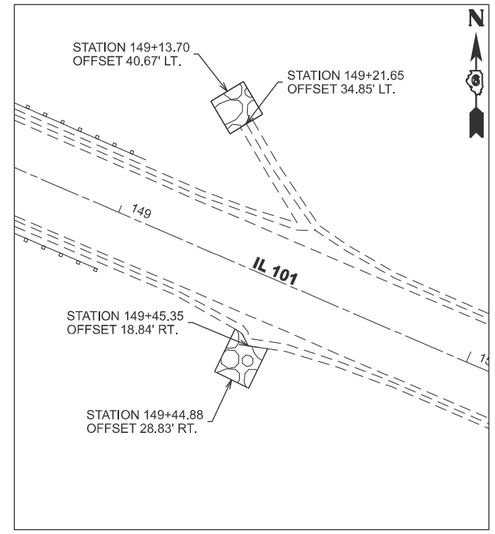

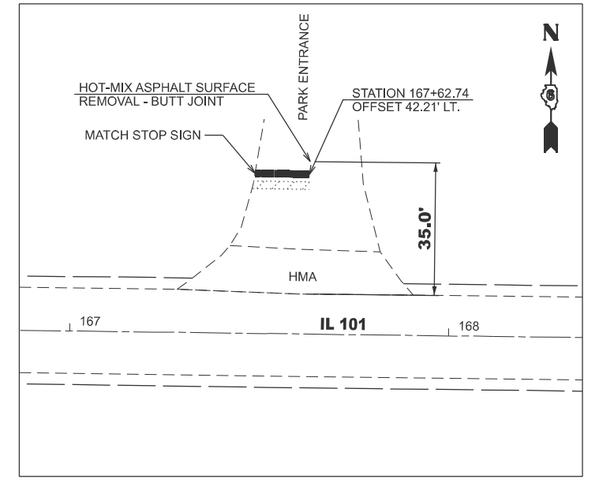

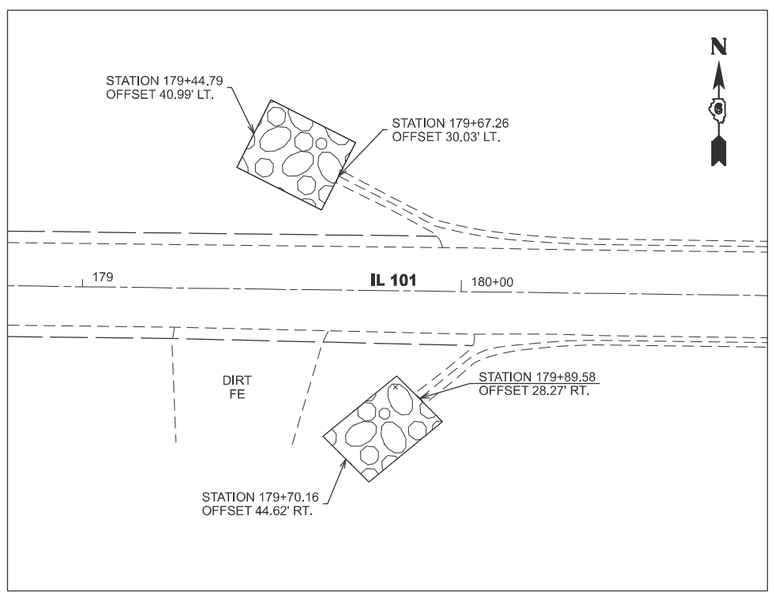

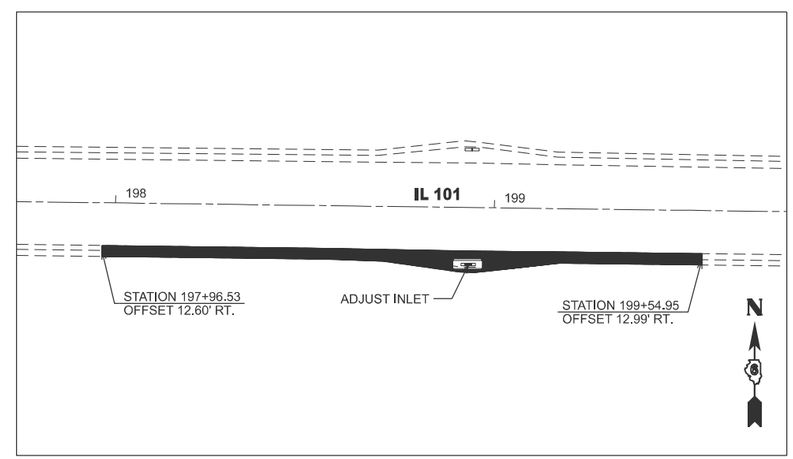

MODEL: Plan Details 1 [Sheet]
FILE NAME: c:\pw_work\pwidot\castrosotov\d1106097\72762-sht-08-Plan Details.dgn

USER NAME = Veronica.CastroSoto	DESIGNED -	REVISED -	
	DRAWN -	REVISED -	
	CHECKED -	REVISED -	
PLOT DATE = 12/5/2025	DATE -	REVISED -	

STATE OF ILLINOIS
DEPARTMENT OF TRANSPORTATION

PLAN DETAILS

SCALE: | SHEET A001 OF 5 SHEETS | STA. | TO STA.

F.A.P RTE.	SECTION	COUNTY	TOTAL SHEETS	SHEET NO.
713	119RS-4, 120RS-5,CLV	SCHUYLER	56	24

CONTRACT NO. 72762

ILLINOIS | FED. AID PROJECT

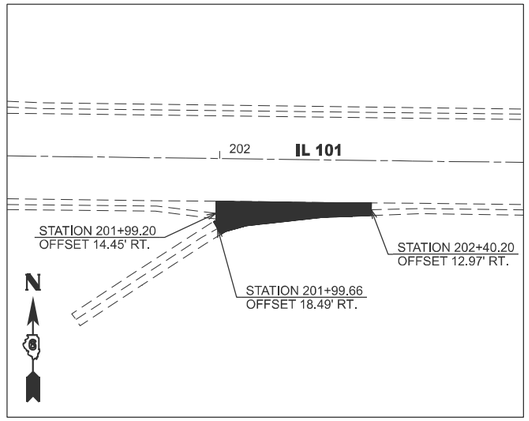

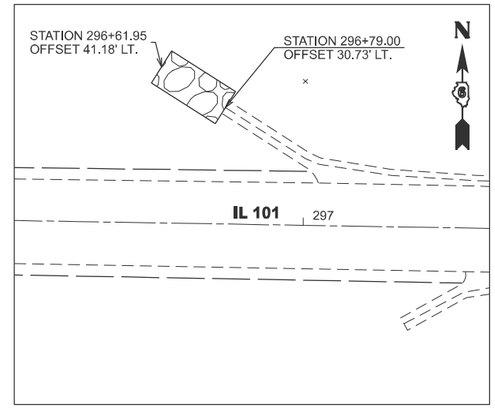

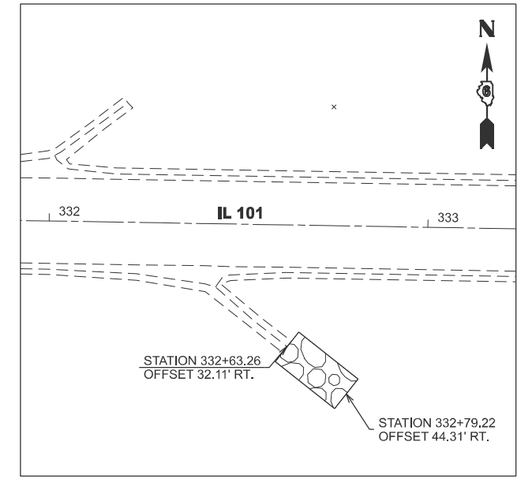

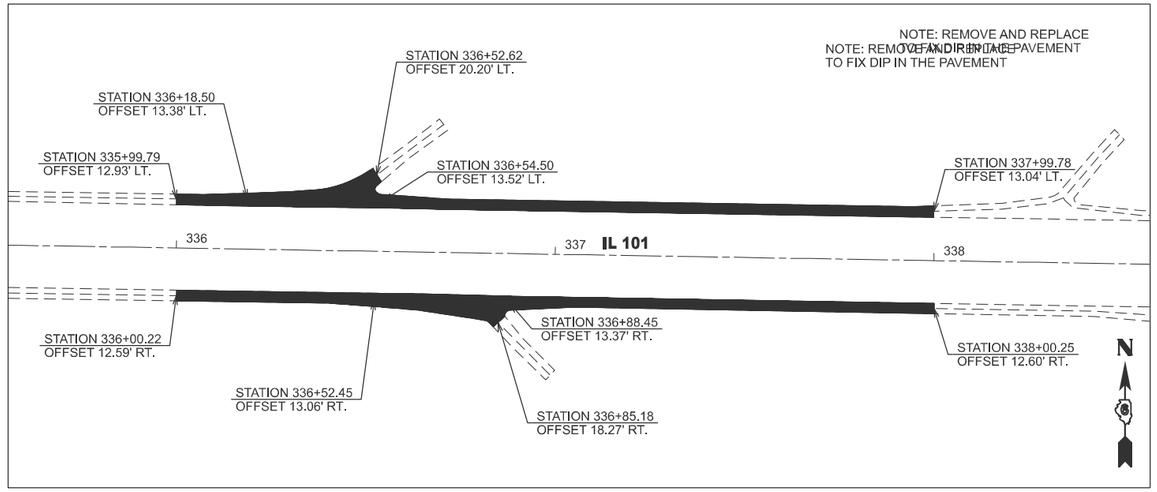

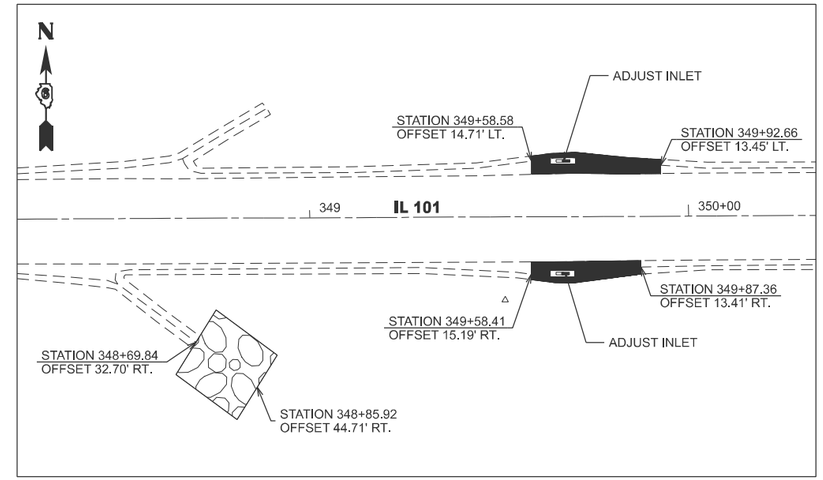

MODEL: Plan Details 6 [Sheet]
FILE NAME: c:\pw_work\pwidot\castrosoto\d1106097\72762-sht-08-Plan Details.dgn

USER NAME = Veronica.CastroSoto	DESIGNED -	REVISED -	
	DRAWN -	REVISED -	
	CHECKED -	REVISED -	
PLOT DATE = 12/5/2025	DATE -	REVISED -	

STATE OF ILLINOIS
DEPARTMENT OF TRANSPORTATION

PLAN DETAILS

SCALE: | SHEET A002 OF 5 SHEETS | STA. | TO STA.

F.A.P RTE.	SECTION	COUNTY	TOTAL SHEETS	SHEET NO.
713	119RS-4, 120RS-5,CLV	SCHUYLER	56	25

CONTRACT NO. 72762

ILLINOIS | FED. AID PROJECT

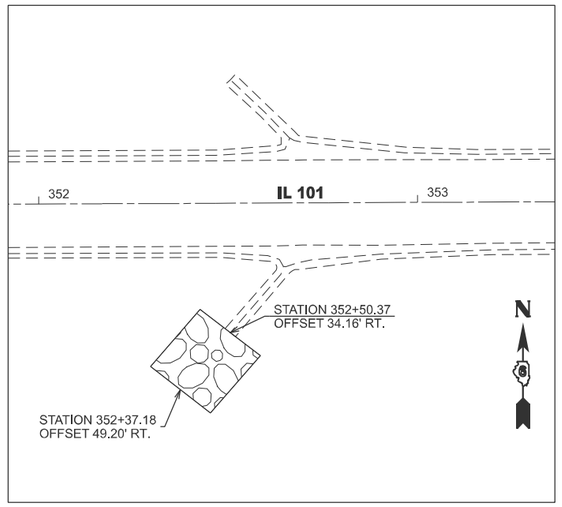

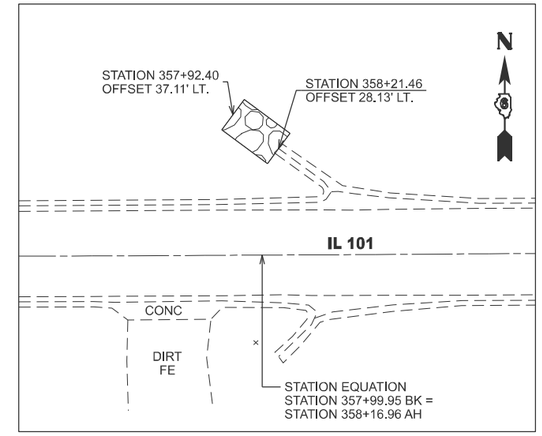

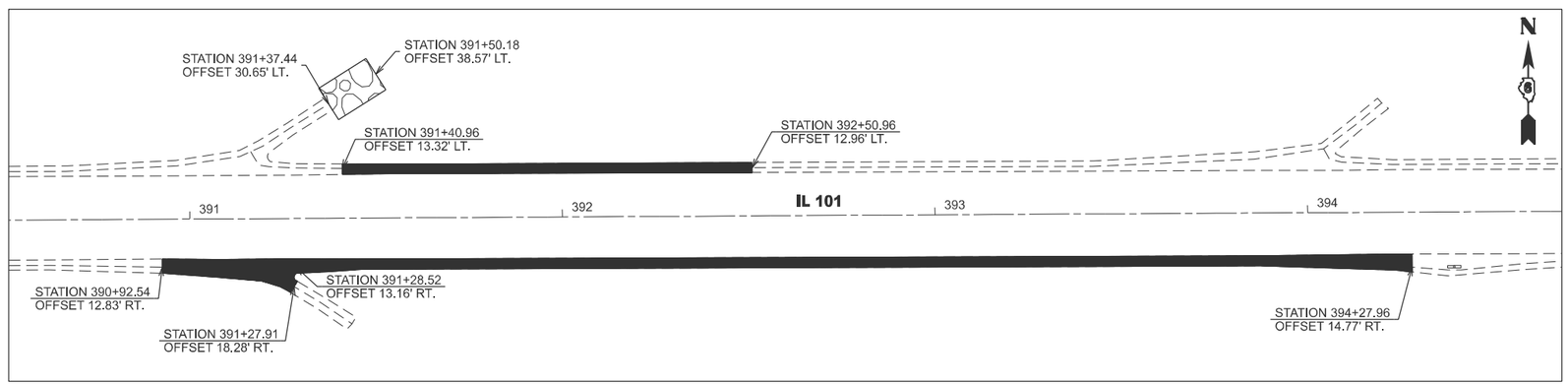

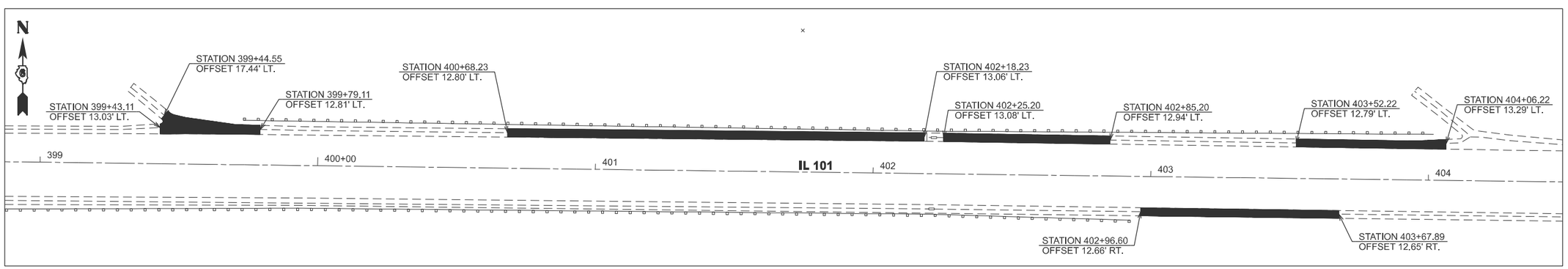

MODEL: Plan Details 11 [Sheet]
FILE NAME: c:\pw_work\pwidot\castrosotov\d1106097\72762-sht-09-Plan Details.dgn

USER NAME = Veronica.CastroSoto	DESIGNED -	REVISED -	
	DRAWN -	REVISED -	
	CHECKED -	REVISED -	
PLOT DATE = 12/5/2025	DATE -	REVISED -	

STATE OF ILLINOIS
DEPARTMENT OF TRANSPORTATION

PLAN DETAILS

SCALE: | SHEET A003 OF 5 SHEETS | STA. | TO STA.

F.A.P RTE.	SECTION	COUNTY	TOTAL SHEETS	SHEET NO.
713	119RS-4, 120RS-5,CLV	SCHUYLER	56	26

CONTRACT NO. 72762

ILLINOIS | FED. AID PROJECT

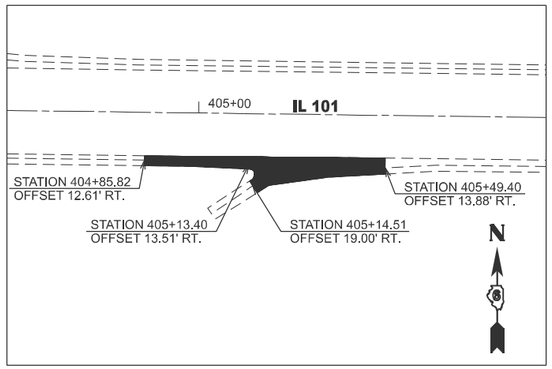

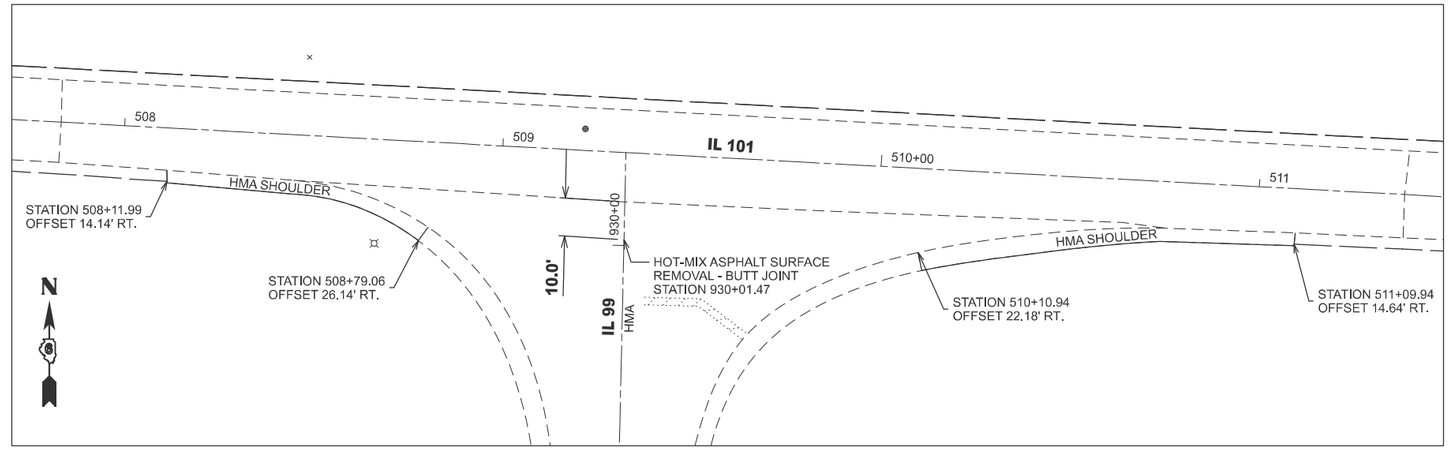

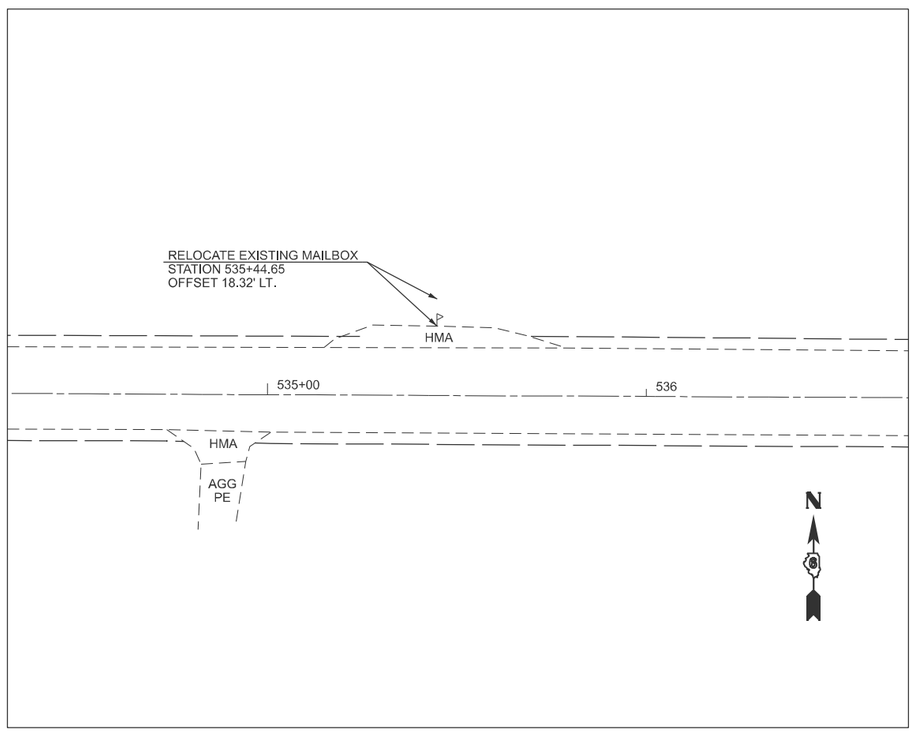

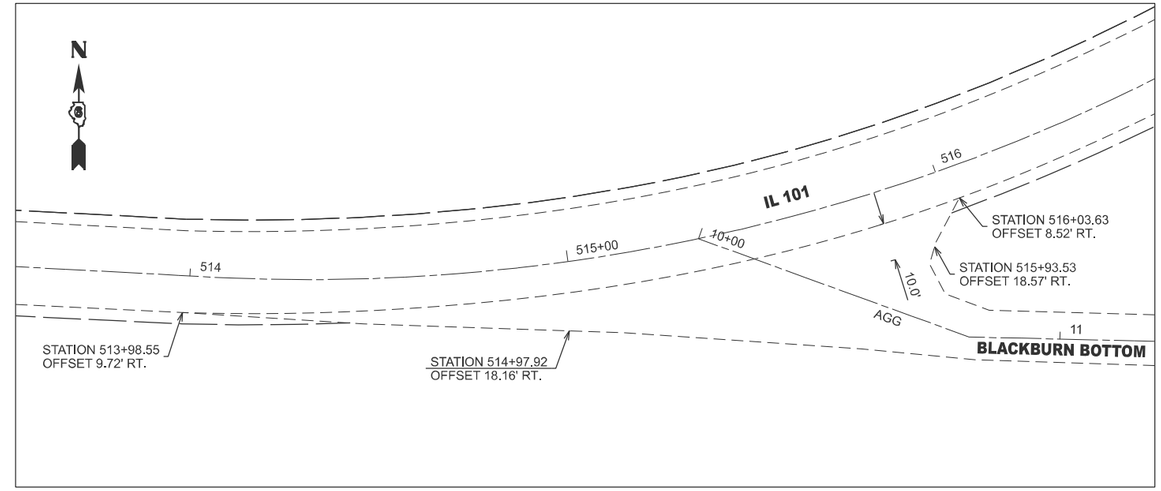

MODEL: Plan Details 15 [Sheet]
FILE NAME: c:\pw_work\pwidot\castrosoto\d1106097\72762-sht-08-Plan Details.dgn

USER NAME = Veronica.CastroSoto	DESIGNED -	REVISED -	
	DRAWN -	REVISED -	
	CHECKED -	REVISED -	
PLOT DATE = 12/5/2025	DATE -	REVISED -	

STATE OF ILLINOIS
DEPARTMENT OF TRANSPORTATION

PLAN DETAILS

SCALE: | SHEET A004 OF 5 SHEETS | STA. | TO STA.

F.A.P RTE.	SECTION	COUNTY	TOTAL SHEETS	SHEET NO.
713	119RS-4, 120RS-5,CLV	SCHUYLER	56	27

CONTRACT NO. 72762

ILLINOIS | FED. AID PROJECT

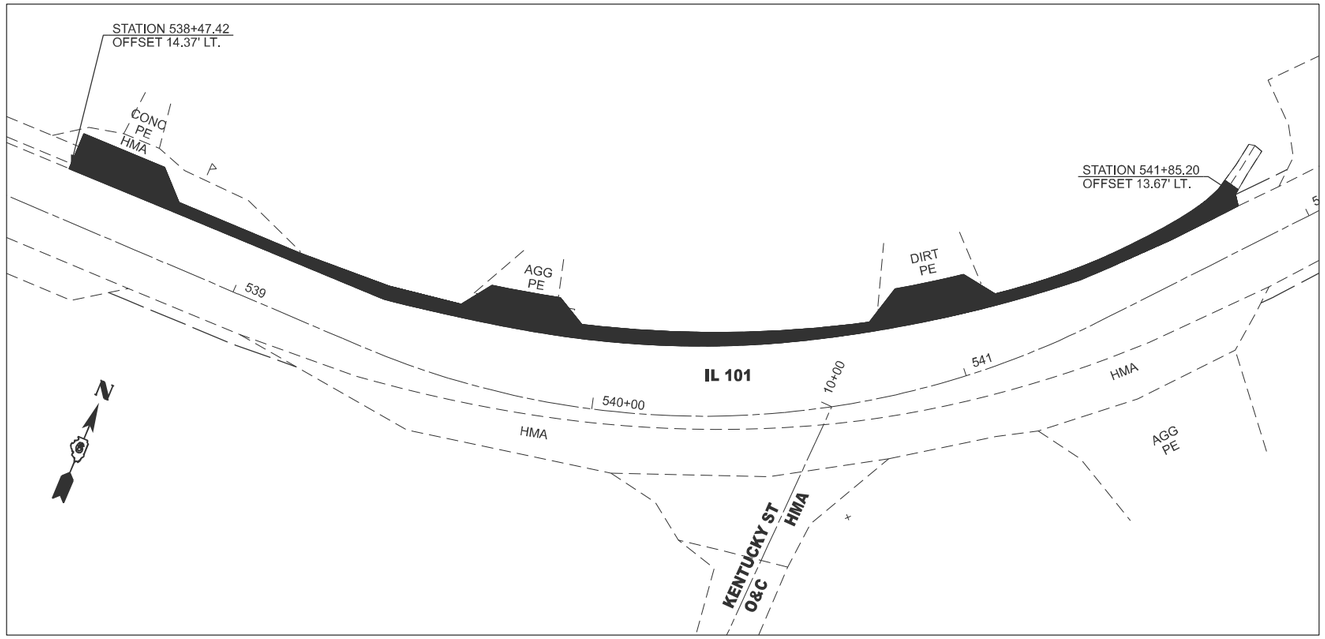

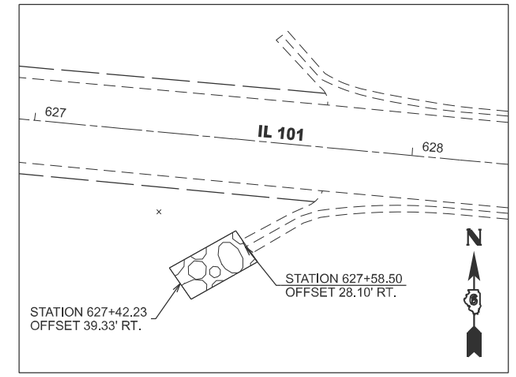

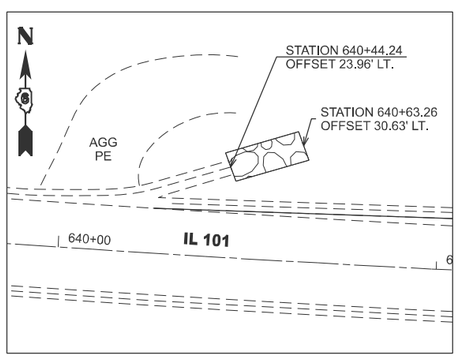

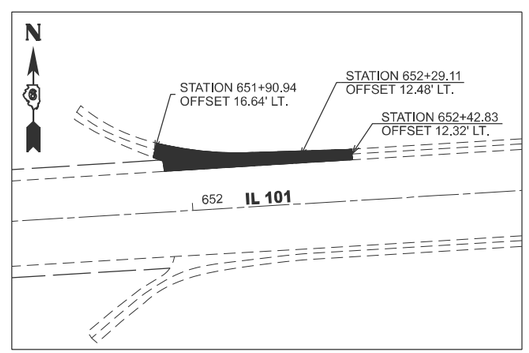

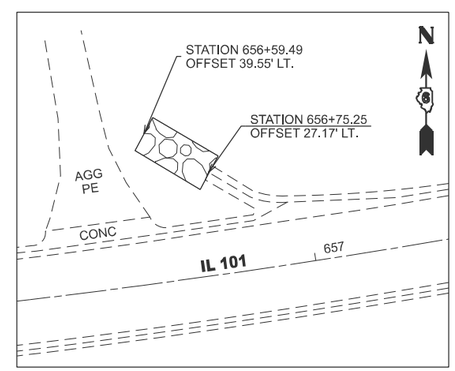

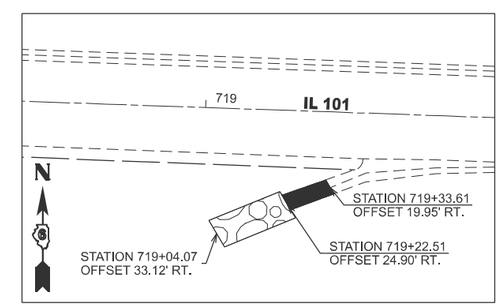

MODEL: Plan Details 18 [Sheet]
FILE NAME: c:\pw_work\pwidot\castrosotov\d1106097\72762-sht-08-Plan Details.dgn

USER NAME = Veronica.CastroSoto	DESIGNED -	REVISED -	
	DRAWN -	REVISED -	
	CHECKED -	REVISED -	
PLOT DATE = 12/5/2025	DATE -	REVISED -	

STATE OF ILLINOIS
DEPARTMENT OF TRANSPORTATION

PLAN DETAILS

SCALE: | SHEET A005 OF 5 SHEETS | STA. | TO STA.

F.A.P RTE.	SECTION	COUNTY	TOTAL SHEETS	SHEET NO.
713	119RS-4, 120RS-5,CLV	SCHUYLER	56	28

CONTRACT NO. 72762

ILLINOIS | FED. AID PROJECT

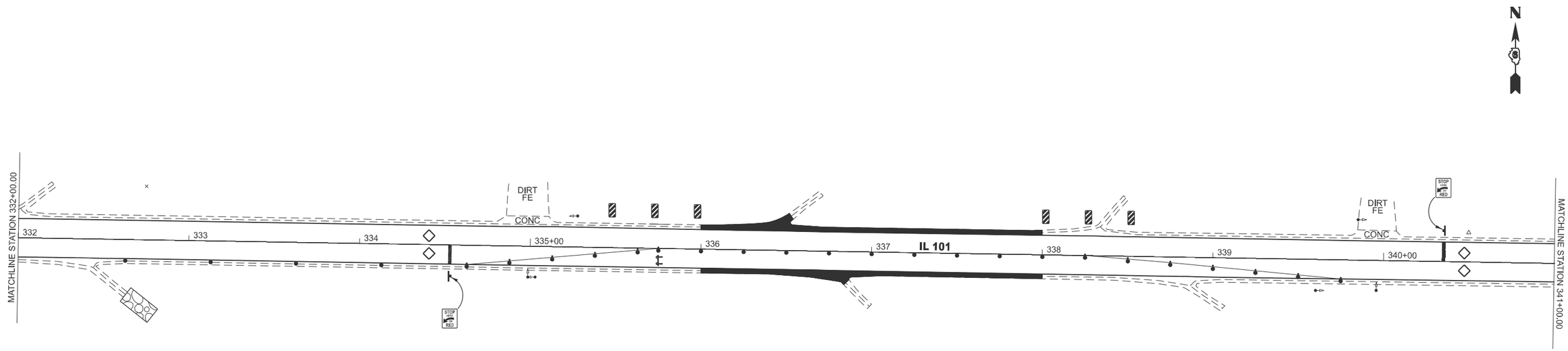

LOCATION #1

NOTE:
SEE HIGHWAY STANDARD 701316 AND
STANDARD 782006 FOR ADDITION INFORMATION

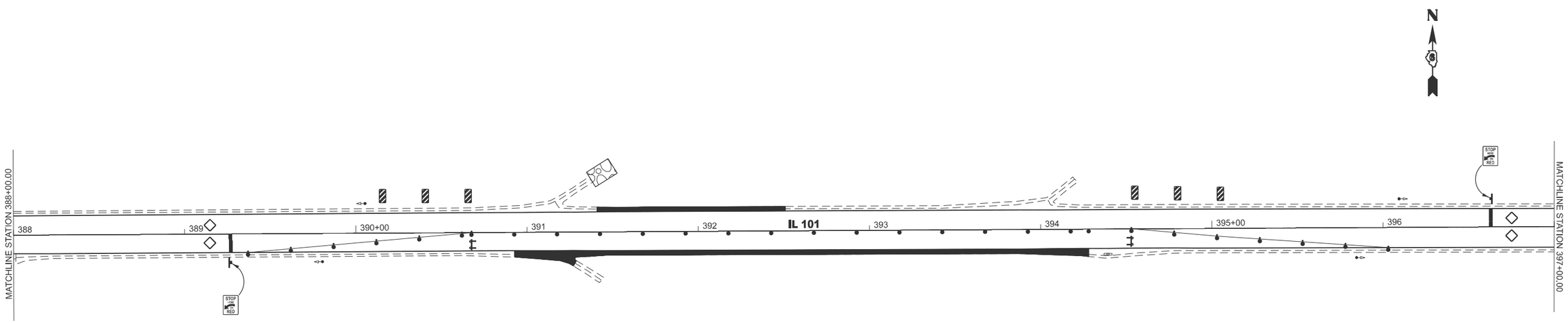

LOCATION #2

NOTE:
SEE HIGHWAY STANDARD 701316 AND
STANDARD 782006 FOR ADDITION INFORMATION

MODEL: Staging Sheet 1 [Sheet]
FILE NAME: c:\pw_work\pwidot\castrosotov\d1106097\72762-Staging Sheets.dgn

USER NAME = Veronica.CastroSoto	DESIGNED -	REVISED -	
	DRAWN -	REVISED -	
	CHECKED -	REVISED -	
PLOT DATE = 12/5/2025	DATE -	REVISED -	

STATE OF ILLINOIS
DEPARTMENT OF TRANSPORTATION

STAGING SHEETS
IL 101

SCALE: | SHEET A001 OF 2 SHEETS | STA. | TO STA.

F.A.P RTE.	SECTION	COUNTY	TOTAL SHEETS	SHEET NO.
713	119RS-4, 120RS-5,CLV	SCHUYLER	56	29

CONTRACT NO. 72762

ILLINOIS | FED. AID PROJECT

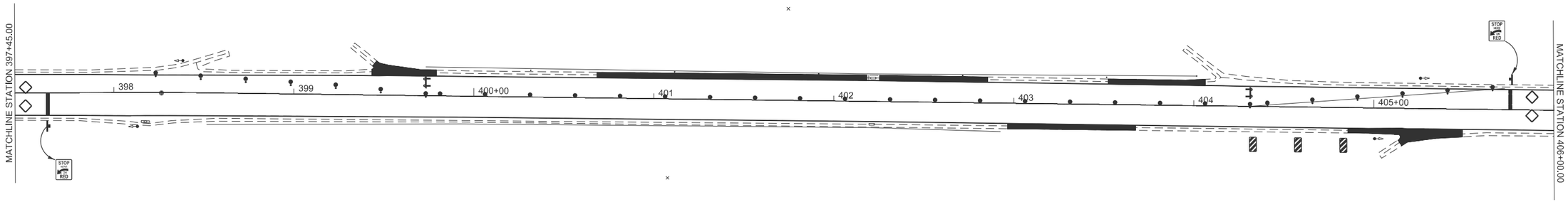

LOCATION #3

NOTE:
SEE HIGHWAY STANDARD 701316 AND
STANDARD 782006 FOR ADDITION INFORMATION

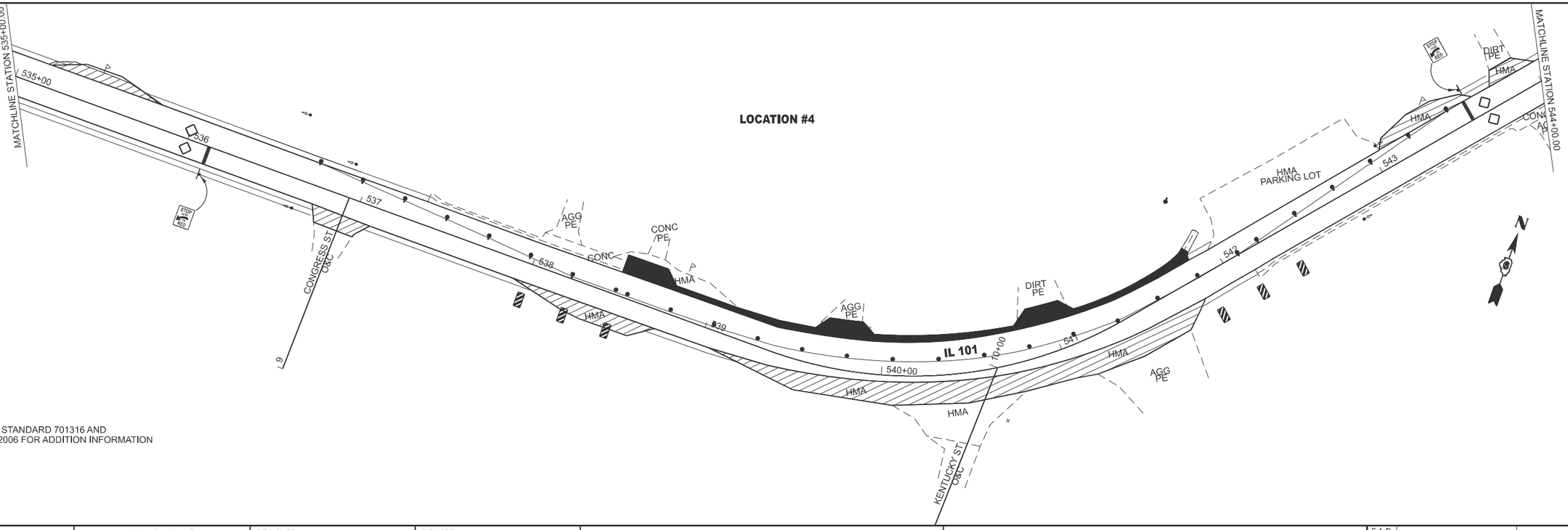

LOCATION #4

NOTE:
SEE HIGHWAY STANDARD 701316 AND
STANDARD 782006 FOR ADDITION INFORMATION

MODEL: Staging Sheet 3 [Sheet]
FILE NAME: c:\pw_work\pwidot\castrosotov\d1106097\72762-Staging Sheets.dgn

USER NAME = Veronica.CastroSoto	DESIGNED -	REVISED -	
	DRAWN -	REVISED -	
	CHECKED -	REVISED -	
PLOT DATE = 12/5/2025	DATE -	REVISED -	

STATE OF ILLINOIS
DEPARTMENT OF TRANSPORTATION

STAGING SHEETS
IL 101

SCALE: | SHEET A002 OF 2 SHEETS | STA. | TO STA.

F.A.P RTE.	SECTION	COUNTY	TOTAL SHEETS	SHEET NO.
713	119RS-4, 120RS-5,CLV	SCHUYLER	56	30
		CONTRACT NO. 72762		
		ILLINOIS	FED. AID PROJECT	

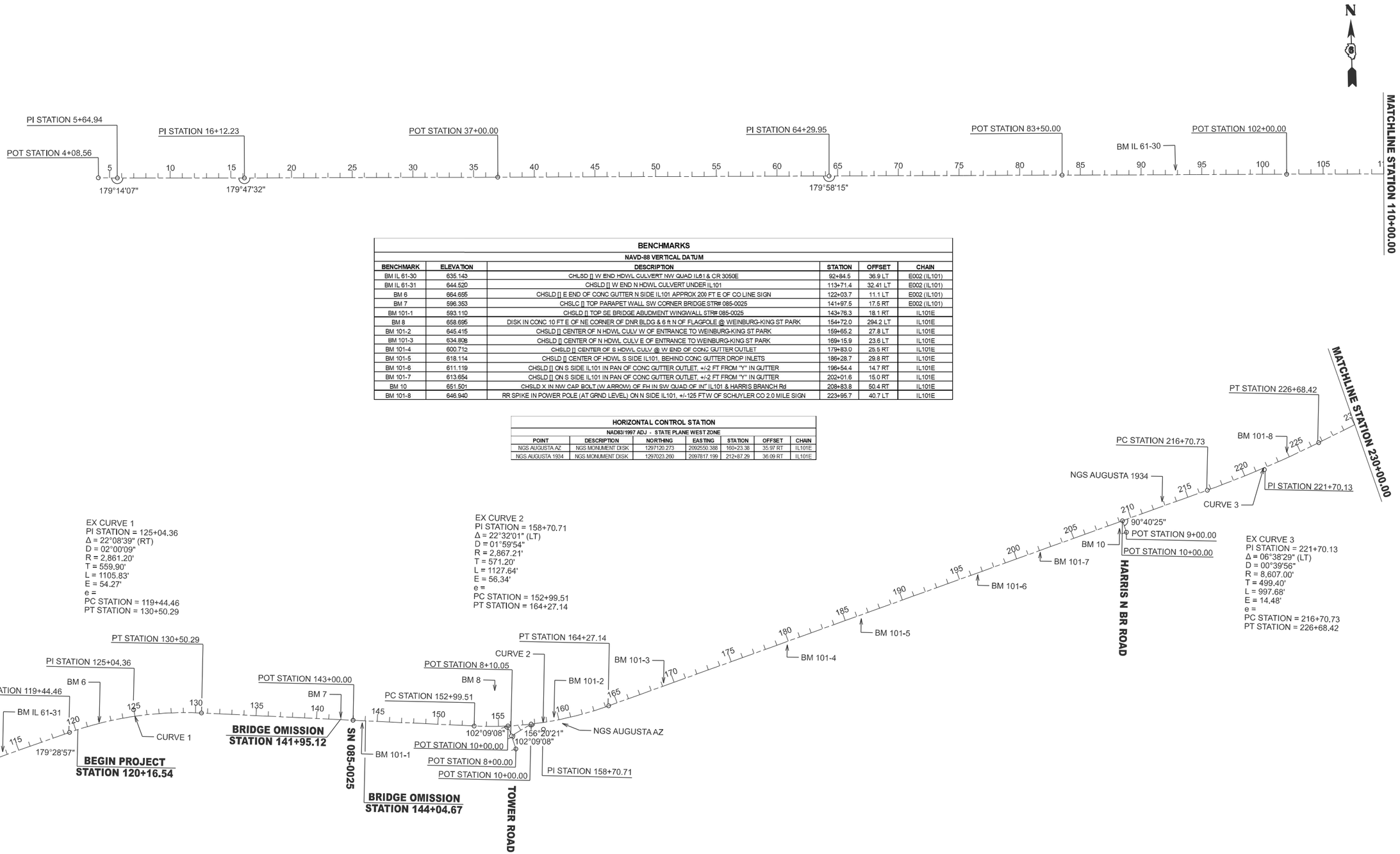

BENCHMARKS

NAVD-88 VERTICAL DATUM

BENCHMARK	ELEVATION	DESCRIPTION	STATION	OFFSET	CHAIN
BM IL 61-30	635.143	CHLSD [] W END HDWL CULVERT NW QUAD IL61 & CR 3050E	92+84.5	36.9 LT	E002 (IL101)
BM IL 61-31	644.520	CHSLD [] W END N HDWL CULVERT UNDER IL101	113+71.4	32.41 LT	E002 (IL101)
BM 6	664.655	CHSLD [] E END OF CONC GUTTER N SIDE IL101 APPROX 200 FT E OF CO LINE SIGN	122+03.7	11.1 LT	E002 (IL101)
BM 7	596.353	CHSLC [] TOP PARAPET WALL SW CORNER BRIDGE STR# 085-0025	141+97.5	17.5 RT	E002 (IL101)
BM 101-1	593.110	CHSLD [] TOP SE BRIDGE ABUDMENT WINGWALL STR# 085-0025	143+76.3	18.1 RT	IL101E
BM 8	658.695	DISK IN CONC 10 FT E OF NE CORNER OF DNR BLDG & 6 ft N OF FLAGPOLE @ WEINBURG-KING ST PARK	154+72.0	294.2 LT	IL101E
BM 101-2	645.415	CHSLD [] CENTER OF N HDWL CULV W OF ENTRANCE TO WEINBURG-KING ST PARK	159+65.2	27.8 LT	IL101E
BM 101-3	634.808	CHSLD [] CENTER OF N HDWL CULV E OF ENTRANCE TO WEINBURG-KING ST PARK	169+15.9	23.6 LT	IL101E
BM 101-4	600.712	CHSLD [] CENTER OF S HDWL CULV @ W END OF CONC GUTTER OUTLET	179+83.0	25.5 RT	IL101E
BM 101-5	618.114	CHSLD [] CENTER OF HDWL S SIDE IL101, BEHIND CONC GUTTER DROP INLETS	186+28.7	29.8 RT	IL101E
BM 101-6	611.119	CHSLD [] ON S SIDE IL101 IN PAN OF CONC GUTTER OUTLET, +/-2 FT FROM "Y" IN GUTTER	196+54.4	14.7 RT	IL101E
BM 101-7	613.654	CHSLD [] ON S SIDE IL101 IN PAN OF CONC GUTTER OUTLET, +/-2 FT FROM "Y" IN GUTTER	202+01.6	15.0 RT	IL101E
BM 10	651.501	CHSLD X IN NW CAP BOLT (W ARROW) OF FH IN SW QUAD OF IN" IL101 & HARRIS BRANCH Rd	208+83.8	50.4 RT	IL101E
BM 101-8	646.940	RR SPIKE IN POWER POLE (AT GRND LEVEL) ON N SIDE IL101, +/-125 FTW OF SCHUYLER CO 2.0 MILE SIGN	223+95.7	40.7 LT	IL101E

HORIZONTAL CONTROL STATION

NAD83/1997 ADJ - STATE PLANE WEST ZONE

POINT	DESCRIPTION	NORTHING	EASTING	STATION	OFFSET	CHAIN
NGS AUGUSTA AZ	NGS MONUMENT DISK	1297120.273	2092550.388	160+23.38	35.97 RT	IL101E
NGS AUGUSTA 1934	NGS MONUMENT DISK	1297023.260	2097817.199	212+87.29	36.09 RT	IL101E

MODEL: 1 E002 - Alignment [Sheet 1]
FILE NAME: c:\pw_work\pwidot\castrosotov\d1106097\72762-sht-06-align-iles-bm.dgn

USER NAME = Veronica.CastroSoto	DESIGNED -	REVISED -	
	DRAWN -	REVISED -	
	CHECKED -	REVISED -	
PLOT DATE = 12/5/2025	DATE -	REVISED -	

STATE OF ILLINOIS
DEPARTMENT OF TRANSPORTATION

ALIGNMENTS & BENCHMARKS

SCALE: 1"=400' | SHEET A001 OF 4 SHEETS | STA. 4+08.56 | TO STA. 124+08.56

F.A.P RTE.	SECTION	COUNTY	TOTAL SHEETS	SHEET NO.
713	119RS-4, 120RS-5,CLV	SCHUYLER	56	31
		CONTRACT NO. 72762		
		ILLINOIS FED. AID PROJECT		

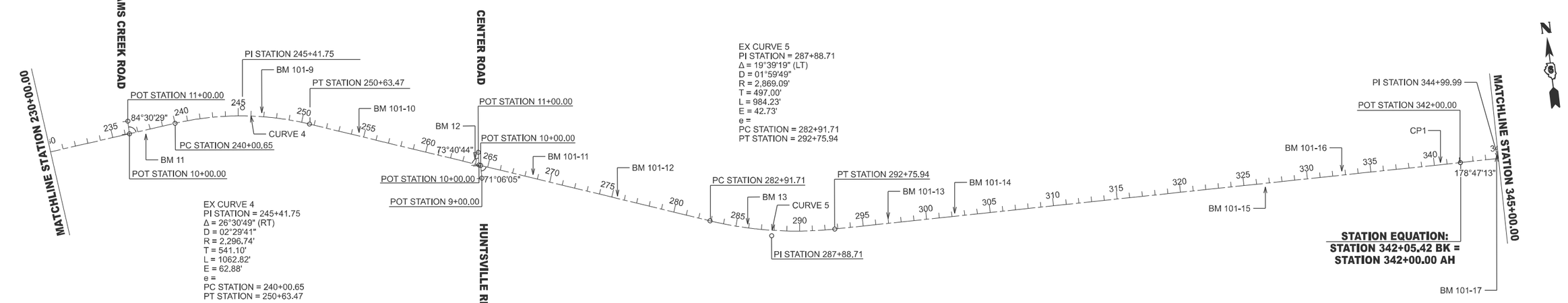

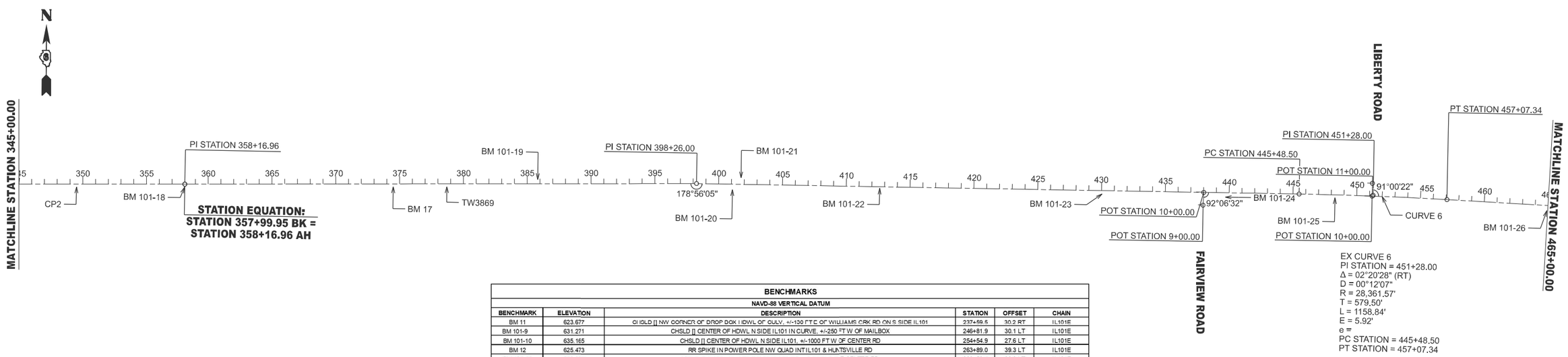

BENCHMARKS

NAVD-88 VERTICAL DATUM

BENCHMARK	ELEVATION	DESCRIPTION	STATION	OFFSET	CHAIN
BM 11	623.677	CHSLD [] NW CORNER OF DROP BOX HDWL OF CULV, +/-130 FT E OF WILLIAMS CRK RD ON S SIDE IL101	237+99.5	30.2 RT	IL101E
BM 101-9	631.271	CHSLD [] CENTER OF HDWL N SIDE IL101 IN CURVE, +/-250 FT W OF MAILBOX	246+81.9	30.1 LT	IL101E
BM 101-10	635.165	CHSLD [] CENTER OF HDWL N SIDE IL101, +/-1000 FT W OF CENTER RD	254+54.9	27.6 LT	IL101E
BM 12	625.473	RR SPIKE IN POWER POLE NW QUAD INT IL101 & HUNTSVILLE RD	263+89.0	39.3 LT	IL101E
BM 101-11	610.334	CHSLD [] CENTER OF HDWL N SIDE IL101, +/-400 FT E OF CENTER RD	268+89.4	26.2 LT	IL101E
BM 101-12	589.241	CHSLD [] CENTER OF HDWL N SIDE IL101 (W OF CONC ENT)	275+40.8	18.5 LT	IL101E
BM 13	557.968	CHSLD [] W END OF HDWL N SIDE IL101	285+88.4	28.9 LT	IL101E
BM 101-13	582.238	RR SPIKE IN FORKED WHITE OAK TREE ON N SIDE IL101, BTWEEN CONC GUTTER OUTLET & ROW FENCE	297+00.0	38.0 LT	IL101E
BM 101-14	593.975	CHSLD [] CENTER OF HDWL S SIDE IL101	302+24.0	24.2 RT	IL101E
BM 101-15	616.304	CHSLD [] CENTER OF HDWL S SIDE IL101, +/-50 FT W OF CONC GUTTER END	326+96.3	28.6 RT	IL101E
BM 101-16	593.802	CHSLD [] ON E END OF HDWL N SIDE IL101, +/-250 FT E OF SCHUYLER CO 4.0 MILE SIGN	332+74.7	31.3 LT	IL101E
BM 101-17	567.276	CHSLD [] ON EXPOSED ROCK N SIDE IL101, +/-12 FT E OF CONC ENT	344+88.3	23.7 LT	IL101B
BM 101-18	576.351	CHSLD [] CENTER OF H S SIDE IL101 (BETWEEN GUTTER OUTLET & CONC ENT)	357+98.2	23.1 RT	IL101B
BM 17	579.050	CHSLD [] W END OF HDWL S SIDE IL101	374+50.6	23.0 RT	IL101D
BM 101-19	559.845	CHSLD [] ON E END OF HDWL N SIDE IL10'	385+81.6	34.1 LT	IL101D
BM 101-20	523.062	CHSLD [] CENTER OF HDWL (OVER MIDDLE WALL) OF DOUBLE BARREL BOX CULV STR #085-2503, S SIDE IL101	401+08.1	44. RT	IL101D
BM 101-21	522.358	CHSLD [] CENTER OF HDWL OF DOUBLE BARREL BOX CULV STR #085-2503, N SIDE IL101	401+74.1	51.0 LT	IL101D
BM 101-22	574.365	CHSLD [] E END OF CONC GUTTER FLAG ON S SIDE IL101	412+61.7	11.9 RT	IL101D
BM 101-23	556.935	CHSLD [] CNTER OF HDWL ON S SIDE IL101	430+05.4	27.2 RT	IL101D
BM 101-24	560.850	CHSLD [] CNTER OF HDWL ON S SIDE IL101	439+71.1	34.1 RT	IL101D
BM 101-25	573.644	CHSLD [] CENTER OF S WALL OF DROP BOX TO HDWL ON S SIDE IL101	448+29.5	22.8 RT	IL101D
BM 101-26	573.846	RR SPIKE IN POWER POLE (@ GRND LEVEL) ON S SIDE IL101	464+94.2	40.7 RT	IL101D

HORIZONTAL CONTROL STATION

NAD83/1997 ADJ - STATE PLANE WEST ZONE

POINT	DESCRIPTION	NORTHING	EASTING	STATION	OFFSET	CHAIN
CP1	#5 REBAR	1295718.816	2110323.993	340+49.59	17.18 LT	IL101E
CP2	#5 REBAR	1295674.092	2111231.044	349+51.48	21.93 RT	IL101B
TW3869	#5 REBAR W CAP	1295688.599	2114133.197	378+70.64	22.76 RT	IL101D

MODEL: 2 IL101E-1 - Alignment [Sheet 2]
FILE NAME: c:\pw_work\pwidot\castrosotov\d1106097\72762-sht-05-align-ltes-bm.dgn

USER NAME = Veronica.CastroSoto	DESIGNED -	REVISED -	
	DRAWN -	REVISED -	
	CHECKED -	REVISED -	
PLOT DATE = 12/5/2025	DATE -	REVISED -	

STATE OF ILLINOIS
DEPARTMENT OF TRANSPORTATION

ALIGNMENTS & BENCHMARKS

SCALE: 1"=400' | SHEET A002 OF 4 SHEETS | STA. 230+00.00 TO STA. A 349+94.58

F.A.P RTE.	SECTION	COUNTY	TOTAL SHEETS	SHEET NO.
713	119RS-4, 120RS-5,CLV	SCHUYLER	56	32

CONTRACT NO. 72762

ILLINOIS | FED. AID PROJECT

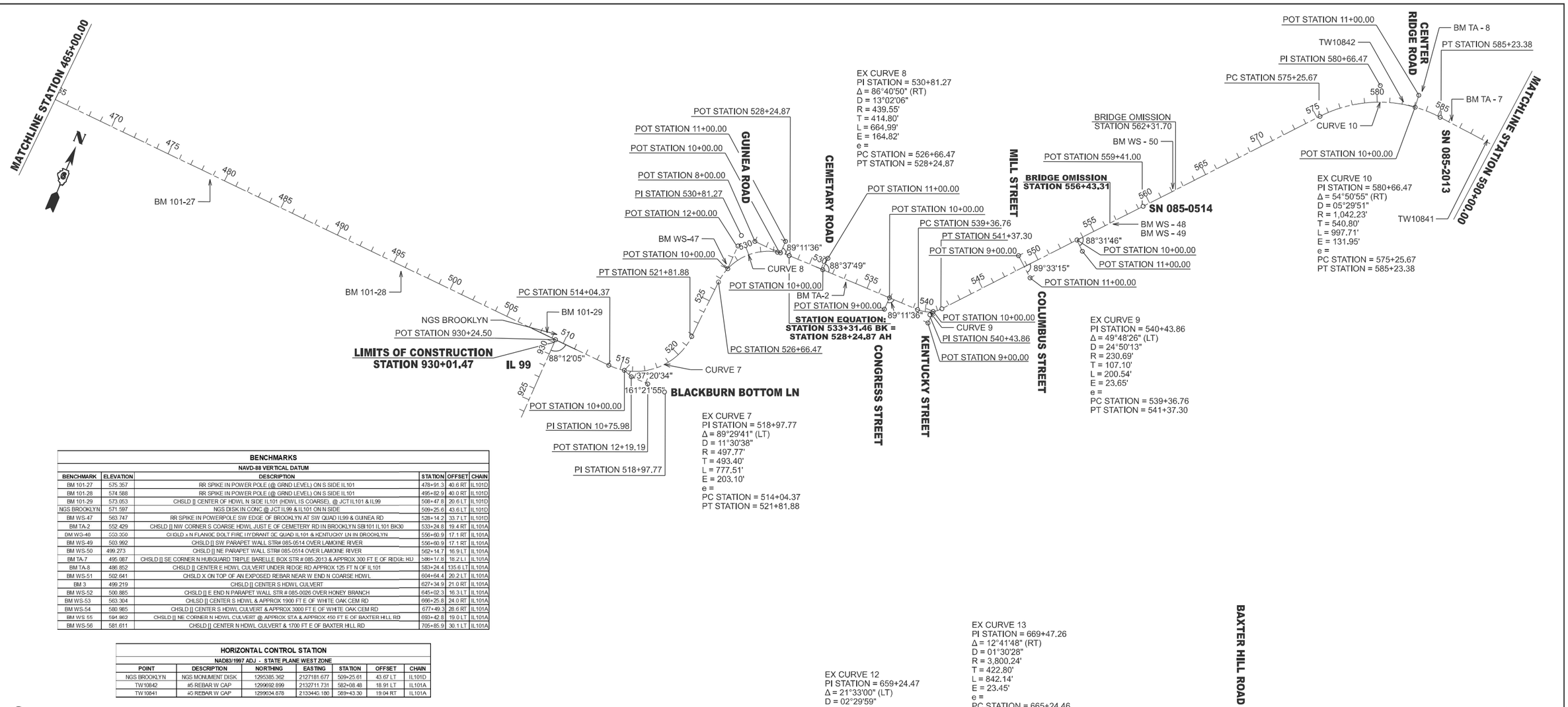

BENCHMARKS					
NAVD-88 VERTICAL DATUM					
BENCHMARK	ELEVATION	DESCRIPTION	STATION	OFFSET	CHAIN
BM 101-27	575.357	RR SPIKE IN POWER POLE (@ GRND LEVEL) ON S SIDE IL101	478+91.3	40.6 RT	IL101D
BM 101-28	574.588	RR SPIKE IN POWER POLE (@ GRND LEVEL) ON S SIDE IL101	495+82.9	40.0 RT	IL101D
BM 101-29	573.053	CHSLD [] CENTER OF HDWL N SIDE IL101 (HDWL IS COARSE), @ JCT IL101 & IL99	508+47.8	20.6 LT	IL101D
NGS BROOKLYN	571.597	NGS DISK IN CONC @ JCT IL99 & IL101 ON N SIDE	509+25.6	43.6 LT	IL101D
BM WS-47	563.747	RR SPIKE IN POWERPOLE SW EDGE OF BROOKLYN AT SW QUAD IL99 & GUINEA RD	528+14.2	33.7 LT	IL101D
BM TA-2	552.429	CHSLD [] NW CORNER S COARSE HDWL JUST E OF CEMETERY RD IN BROOKLYN SB IL101 IL101 BK30	533+24.8	19.4 RT	IL101A
BM WS-48	553.356	CHSLD x N FLANGE BOLT FIRE HYDRANT SE QUAD IL101 & KENTUCKY LN IN BROOKLYN	556+60.9	17.1 RT	IL101A
BM WS-49	503.992	CHSLD [] SW PARAPET WALL STR# 085-0514 OVER LAMOINE RIVER	556+60.9	17.1 RT	IL101A
BM WS-50	499.273	CHSLD [] NE PARAPET WALL STR# 085-0514 OVER LAMOINE RIVER	562+14.7	16.9 LT	IL101A
BM TA-7	495.087	CHSLD [] SE CORNER N HUBGUARD TRIPLE BARELLE BOX STR # 085-2013 & APPROX 300 FT E OF RIDGE RD	586+17.8	18.2 LT	IL101A
BM TA-8	486.852	CHSLD [] CENTER E HDWL CULVERT UNDER RIDGE RD APPROX 125 FT N OF IL101	583+24.4	135.6 LT	IL101A
BM WS-51	502.641	CHSLD X ON TOP OF AN EXPOSED REBAR NEAR W END N COARSE HDWL	604+64.4	20.2 LT	IL101A
BM 3	499.219	CHSLD [] CENTER S HDWL CULVERT	627+34.9	21.0 RT	IL101A
BM WS-52	500.885	CHSLD [] E END N PARAPET WALL STR # 085-0026 OVER HONEY BRANCH	645+02.3	16.3 LT	IL101A
BM WS-53	563.304	CHLSD [] CENTER S HDWL & APPROX 1900 FT E OF WHITE OAK CEM RD	666+25.8	24.0 RT	IL101A
BM WS-54	580.985	CHSLD [] CENTER S HDWL CULVERT & APPROX 3000 FT E OF WHITE OAK CEM RD	677+49.3	28.6 RT	IL101A
BM WS-55	594.862	CHSLD [] NE CORNER N HDWL CULVERT @ APPROX STA & APPROX 450 FT E OF BAXTER HILL RD	693+42.8	19.0 LT	IL101A
BM WS-56	581.611	CHSLD [] CENTER N HDWL CULVERT & 1700 FT E OF BAXTER HILL RD	705+85.9	30.1 LT	IL101A

HORIZONTAL CONTROL STATION						
NAD83/1997 ADJ - STATE PLANE WEST ZONE						
POINT	DESCRIPTION	NORTHING	EASTING	STATION	OFFSET	CHAIN
NGS BROOKLYN	NGS MONUMENT DISK	1295385.362	2127181.677	509+25.61	43.67 LT	IL101D
TW10842	#6 REBAR W CAP	1299692.899	2132711.731	582+08.48	18.91 LT	IL101A
TW10841	#0 REBAR W CAP	1299034.878	2133445.180	569+43.30	19.04 RT	IL101A

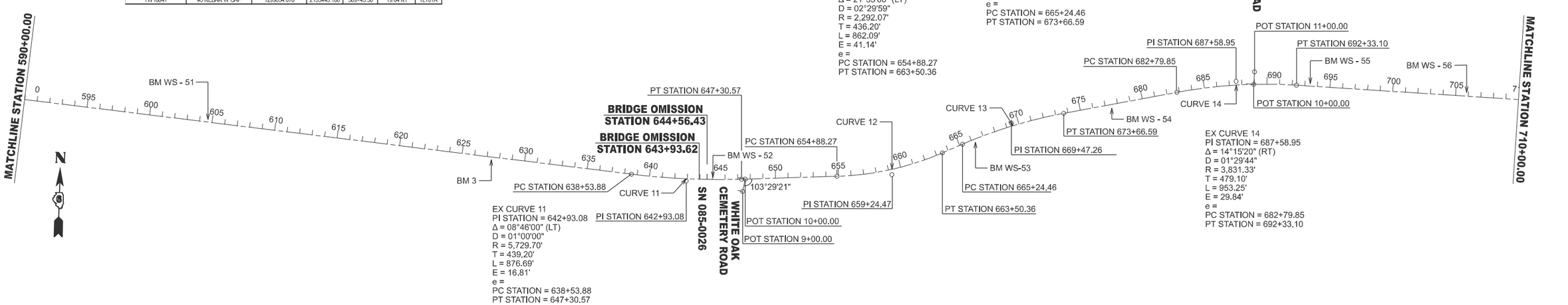

MODEL: 3 IL101D - Alignment [Sheet 3]
FILE NAME: c:\pw_work\pwidot\castrosoto\d1106097\72762-sht-05-align-tles-bm.dgn

USER NAME = Veronica.CastroSoto	DESIGNED -	REVISED -	STATE OF ILLINOIS DEPARTMENT OF TRANSPORTATION
	DRAWN -	REVISED -	
	CHECKED -	REVISED -	
PLOT DATE = 12/5/2025	DATE -	REVISED -	

ALIGNMENTS & BENCHMARKS

SCALE: 1"=400' | SHEET A003 OF 4 SHEETS | STA. 465+00.00 TO STA. A 579+93.41

F.A.P RTE.	SECTION	COUNTY	TOTAL SHEETS	SHEET NO.
713	119RS-4, 120RS-5,CLV	SCHUYLER	56	33

CONTRACT NO. 72762

ILLINOIS | FED. AID PROJECT

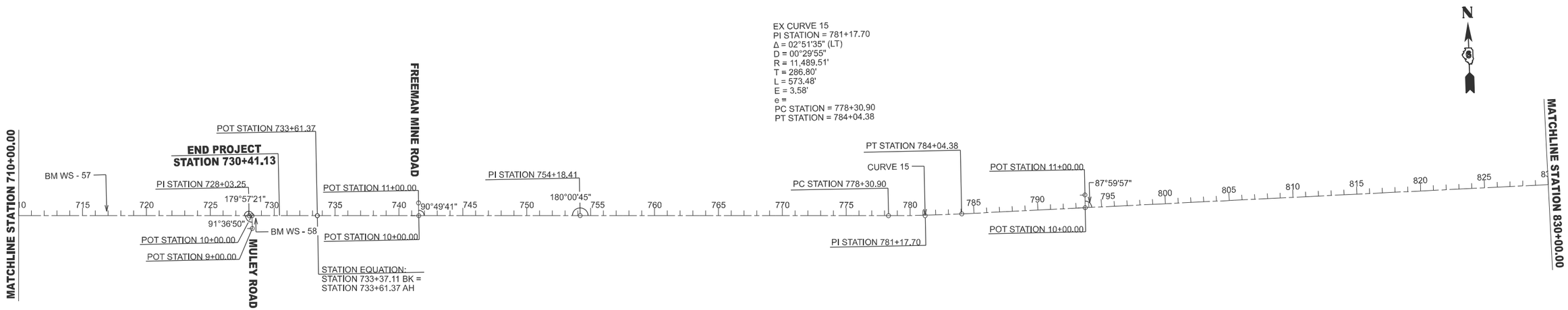

BENCHMARKS					
NAVD-88 VERTICAL DATUM					
BENCHMARK	ELEVATION	DESCRIPTION	STATION	OFFSET	CHAIN
BM WS-57	603.805	CHSLD [] CENTER N HDWL CULVERT & 1150 W OF MULEY RD	716+88.7	33.9 LT	IL101A
BM WS-58	633.367	CHSLD X ON TOP OF AN EXPOSED REBAR W A CHSLD [] ON COARSE HDWL SE QUAD IL101 & MULET RD	728+55.8	20.3 RT	IL101A

MODEL: 4 IL101A-1 - Alignment [Sheet 4]
FILE NAME: c:\pw_work\pwidot\castrosotov\d1106097\72762-sht-06-align-bks-bm.dgn

USER NAME = Veronica.CastroSoto	DESIGNED -	REVISED -	
	DRAWN -	REVISED -	
	CHECKED -	REVISED -	
PLOT DATE = 12/5/2025	DATE -	REVISED -	

STATE OF ILLINOIS
DEPARTMENT OF TRANSPORTATION

ALIGNMENTS & BENCHMARKS

SCALE: 1"=400' | SHEET A004 OF 4 SHEETS | STA. 710+00.00 TO STA. A 830+24.26

F.A.P RTE.	SECTION	COUNTY	TOTAL SHEETS	SHEET NO.
713	119RS-4, 120RS-5,CLV	SCHUYLER	56	34

CONTRACT NO. 72762

ILLINOIS | FED. AID PROJECT

RESETTING SURVEY MARKERS

NAD83/1997 ADJ - STATE PLANE WEST ZONE

POINT	CORNER	EXISTING MONUMENT	STATION	OFFSET	NORTHING	EASTING	ALIGNMENT	X TIE PDF
1258	SW COR. SECTION 22, T3N, R4W, 4TH P.M. SCHUYLER CO.	RR SPIKE	44+54.98	11.05 LT	1295782.985	2105496.299	IL101E	2878
1302*	S 1/4 COR. SECTION 22, T3N, R4W, 4TH P.M. SCHUYLER CO.	MAG NAIL	52+68.40	10.86 LT	1295737.673	2108164.578	IL101E	3473
1262*	S 1/4 COR. SECTION 22, T3N, R4W, 4TH P.M. SCHUYLER CO.	RR SPIKE	52+68.60	14.35 LT	1295741.148	2108165.298	IL101E	3473
1268	NW COR. SECTION 26, T3N, R4W, 4TH P.M. SCHUYLER CO.	MAG NAIL	345+55.46	0.68 RT	1295693.381	2110834.939	IL101B	3472
1303	N 1/4 COR. SECTION 26, T3N, R4W, 4TH P.M. SCHUYLER CO.	MAG NAIL	371+99.42	0.21 LT	1295707.783	2113461.856	IL101D	3472
1281	NW COR. SECTION 25, T3N, R4W, 4TH P.M. SCHUYLER CO.	RR SPIKE	398+26.44	0.40 RT	1295721.958	2116088.830	IL101D	2668
1286	N 1/4 COR. SECTION 25, T3N, R4W, 4TH P.M. SCHUYLER CO.	5/8" IRON PIN	424+77.36	6.86 LT	1295694.859	2118739.622	IL101D	2668
1305	N 1/4 COR. SECTION 30, T3N, R3W, 4TH P.M. SCHUYLER CO.	PK NAIL	482+71.44	2.49 LT	1295487.019	2124529.132	IL101D	2282
TW10088	NE COR. SECTION 30, T3N, R3W, 4TH P.M. SCHUYLER CO.	ALUM CAP	509+21.51	5.71 LT	1295347.681	2127175.529	IL101D	2281
1236	NW COR. SECTION 23, T3N, R4W, 4TH P.M. SCHUYLER CO.	SURVEY SPIKE	688+87.32	12.97LT	1300071.736	2143246.411	IL 101A	2671

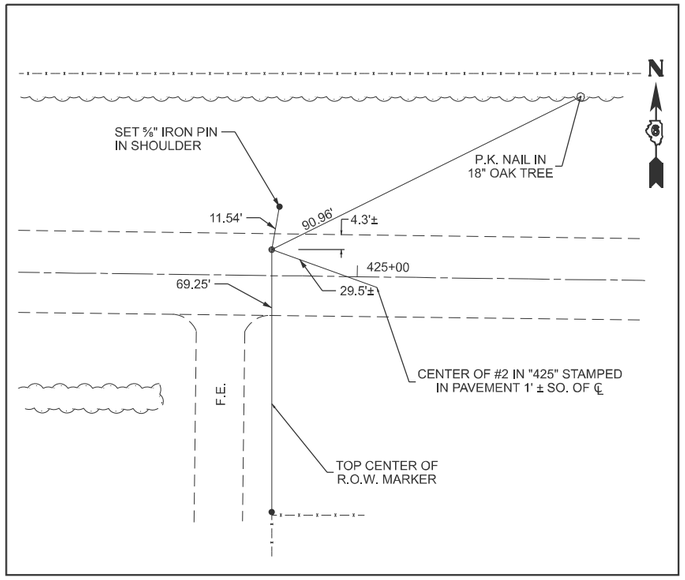

N 1/4 COR. SECTION 25, T3N, R4W, 4TH P.M. SCHUYLER CO.
1286 - 5/8" IRON PIN

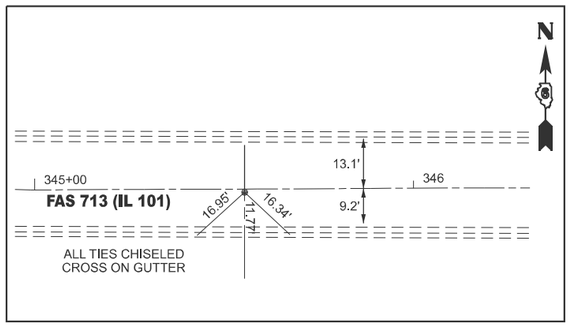

NW COR. SECTION 26, T3N, R4W, 4TH P.M. SCHUYLER CO.
1268 - MAG NAIL

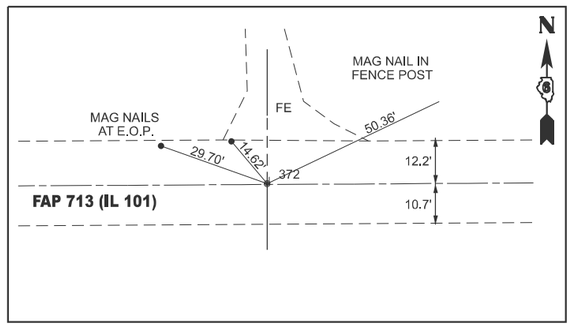

N 1/4 COR. SECTION 25, T3N, R4W, 4TH P.M. SCHUYLER CO.
POINT 1303 - MAG NAIL

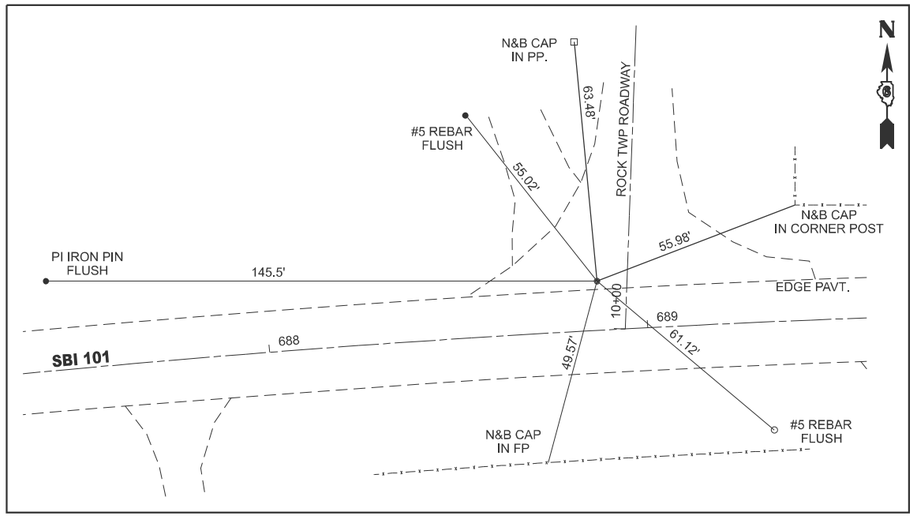

NW COR. SECTION 23, T3N, R4W, 4TH P.M. SCHUYLER CO.
1236 - SURVEY SPIKE

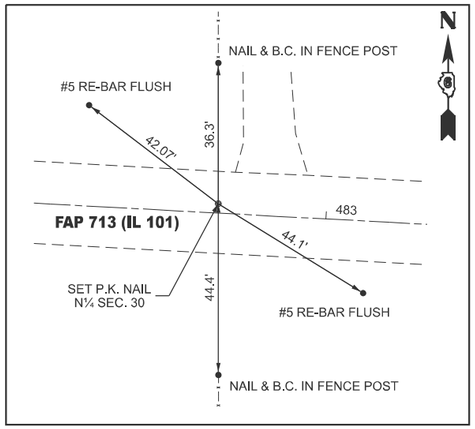

N 1/4 COR. SECTION 30, T3N, R3W, 4TH P.M. SCHUYLER CO.
1305 - PK NAIL

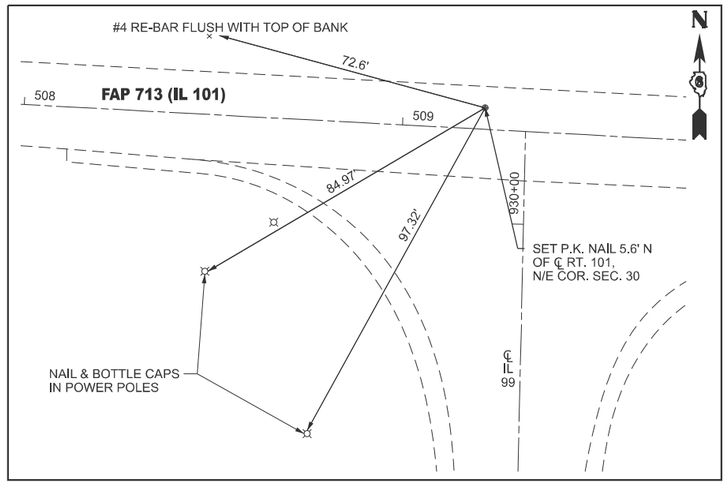

NE COR. SECTION 30, T3N, R3W, 4TH P.M. SCHUYLER CO.
TW10088 - ALUM CAP

MODEL: Corner Sections [Sheet]
FILE NAME: c:\pw_work\pwidot\castrosotov\d1106097\72762-sht-07-csm.dgn

USER NAME = Veronica.CastroSoto	DESIGNED -	REVISED -	
	DRAWN -	REVISED -	
	CHECKED -	REVISED -	
PLOT DATE = 12/5/2025	DATE -	REVISED -	

STATE OF ILLINOIS
DEPARTMENT OF TRANSPORTATION

SECTION CORNERS

SCALE: SHEET 1 OF 1 SHEETS STA. TO STA.

F.A.P RTE.	SECTION	COUNTY	TOTAL SHEETS	SHEET NO.
713	119RS-4, 120RS-5,CLV	SCHUYLER	56	35
		CONTRACT NO. 72762		
		ILLINOIS FED. AID PROJECT		

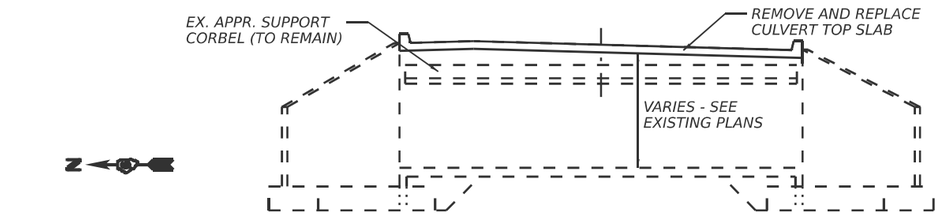

ELEVATION

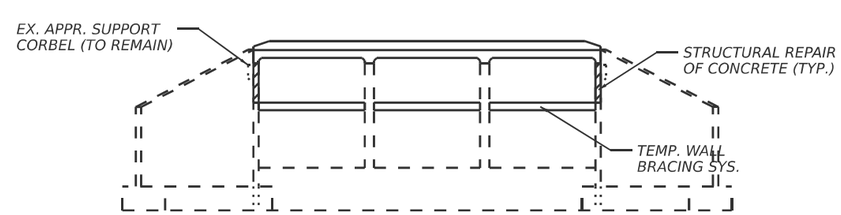

END ELEVATION

CONTROL POINTS

- BM TA-7 = CHISELED SQUARE SE CORNER N HUBGUARD ON SN 085-2013, STA 586+17.8, 18.2' LT, ELEV. = 495.087
- BM TA-8 = CHISELED SQUARE CENTER E HEADWALL ON CULVERT UNDER RIDGE RD, STA 583+24.4, 135.6' LT, ELEV. = 486.852

GENERAL NOTES

Reinforcement bars designated (E) shall be epoxy coated.

The Contractor shall make allowance for the deflection of forms, shrinkage, and settlement of falsework, in addition to allowance for dead load deflection. Forms for deck slab shall be removed prior to placement of bridge approach slab.

Granular Backfill behind the abutments shall be compacted according to Article 205.06 of the Standard Specifications.

Plan dimensions and details relative to the existing structure have been taken from existing plans are subject to nominal construction variations. The Contactor shall field verify existing dimensions and details affecting new construction and make necessary approved adjustments prior to construction or ordering of materials. Such variations shall not be cause for additional compensation for a change in scope of the work, however, the Contractor will be paid for the quantity actually furnished at the unit price bid for the work.

Existing reinforcement shall be cleaned, straightened, and incorporated into the new construction. Cost included with Concrete Removal.

Existing Name Plate shall be cleaned and relocated next to new Name Plate. Cost included with Name Plates.

Protective Coat shall be applied to the designated areas of new concrete only.

The proposed slab grades & elevations shall replicate the existing slab or roadway grades & elevations. The contractor shall record existing grades & elevations prior to beginning work. Cost included with Construction Layout.

Excavation for riprap shall not be deeper than the bottom of the existing structure footings. See existing plans for details. Proposed riprap and bedding thicknesses shall confrom to the minimum values in Article 281.04 of the Standard Specifications.

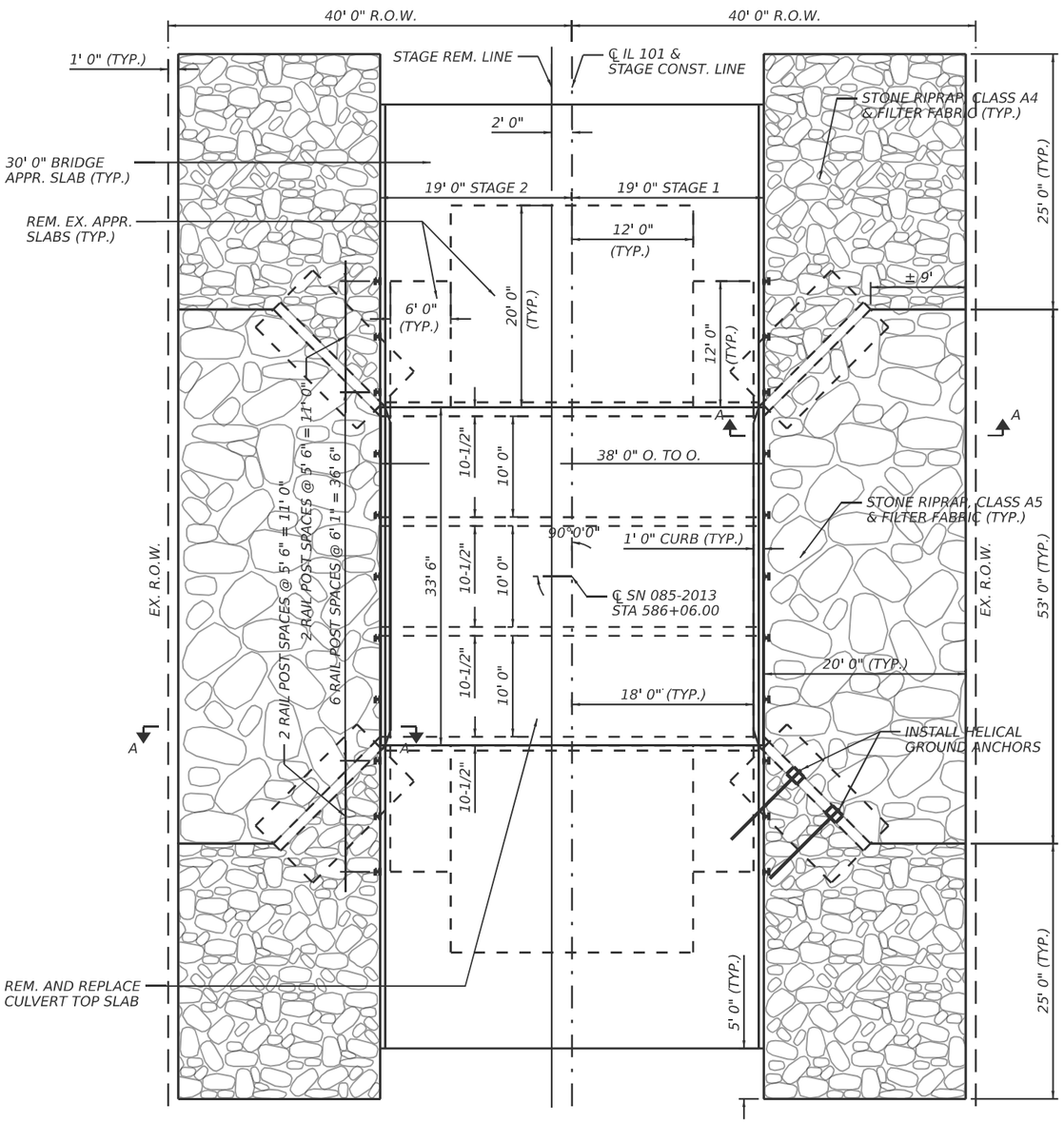

PLAN

STA. 586+06.00
RE-BUILT 202 BY
STATE OF ILLINOIS
F.A.P. RT. 713 SEC. 119RS-4, 120RS-5, CLV
LOADING HS20
STR. NO. 085-2013

NAME PLATE
SEE STD. 515001

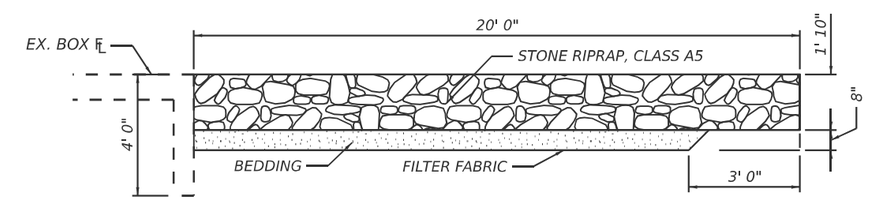

SECTION A-A

TOTAL BILL OF MATERIAL (085-2013)

ITEM	UNIT	QUANTITY
Concrete Removal	Cu. Yd.	39.8
Concrete Superstructure	Cu. Yd.	40.1
Reinforcement Bars, Epoxy Coated	Pound	53910
Bar Splicers	Each	380
Approach Slab Removal	Sq. Yd.	86
Concrete Structures	Cu. Yd.	23.5
Concrete Superstructure (Approach Slab)	Cu. Yd.	108.3
Steel Railing, Type SM	Foot	127
Protective Coat	Sq. Yd.	523
Structural Repair Of Concrete (Depth Equal To Or Less Than 5")	Sq. Ft.	40
Joint Sealing (Patches)	Foot	166
Helical Ground Anchors	Each	2
Stone Riprap, Class A5	Sq. Yd.	212
Stone Riprap, Class A4	Sq. Yd.	249
Filter Fabric	Sq. Yd.	461
Name Plates	Each	1
Temporary Wall Bracing System	L Sum	1
Bridge Rail Removal	Foot	67
Structural Steel Repair	Pound	220

LICENSED STRUCTURAL ENGINEER
JUSTAN W. MANN
081-005947
STATE OF ILLINOIS

Expires November 30, 2026

Justan W. Mann

MODEL: bridge [Sheet]
FILE NAME: c:\pw_work\pwidot\dudley\bmd\d1106099\085-2013 plans.dgn

USER NAME = brandon.dudley	DESIGNED - BRANDON DUDLEY	REVISED -	
	DRAWN - BRANDON DUDLEY	REVISED -	
	CHECKED -	REVISED -	
PLOT DATE = 1/20/2026	DATE -	REVISED -	

STATE OF ILLINOIS
DEPARTMENT OF TRANSPORTATION

CULVERT PLAN & ELEVATION
SN 085-2013

SCALE: SHEET 1 OF 16 SHEETS STA. TO STA.

F.A.P RTE.	SECTION	COUNTY	TOTAL SHEETS	SHEET NO.
713	119RS-4, 120RS-5,CLV	SCHUYLER	57	36

CONTRACT NO. 72762

ILLINOIS | FED. AID PROJECT

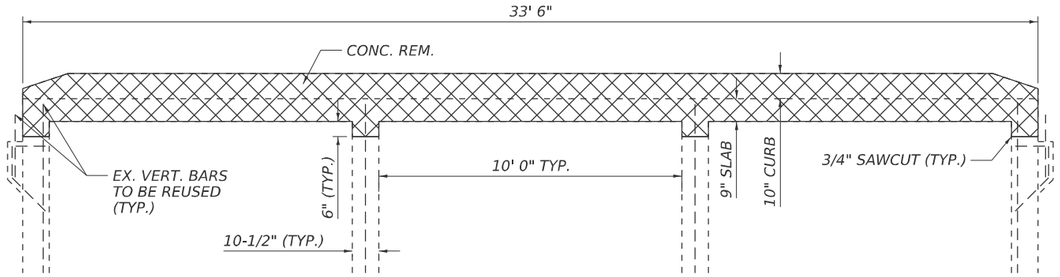

REMOVAL ELEVATION

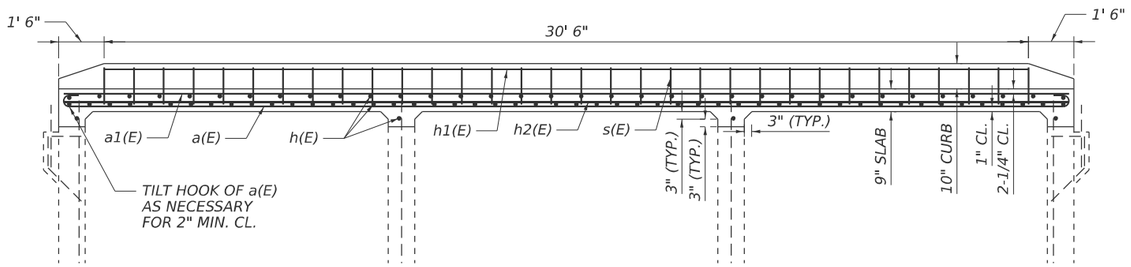

TOP SLAB ELEVATION

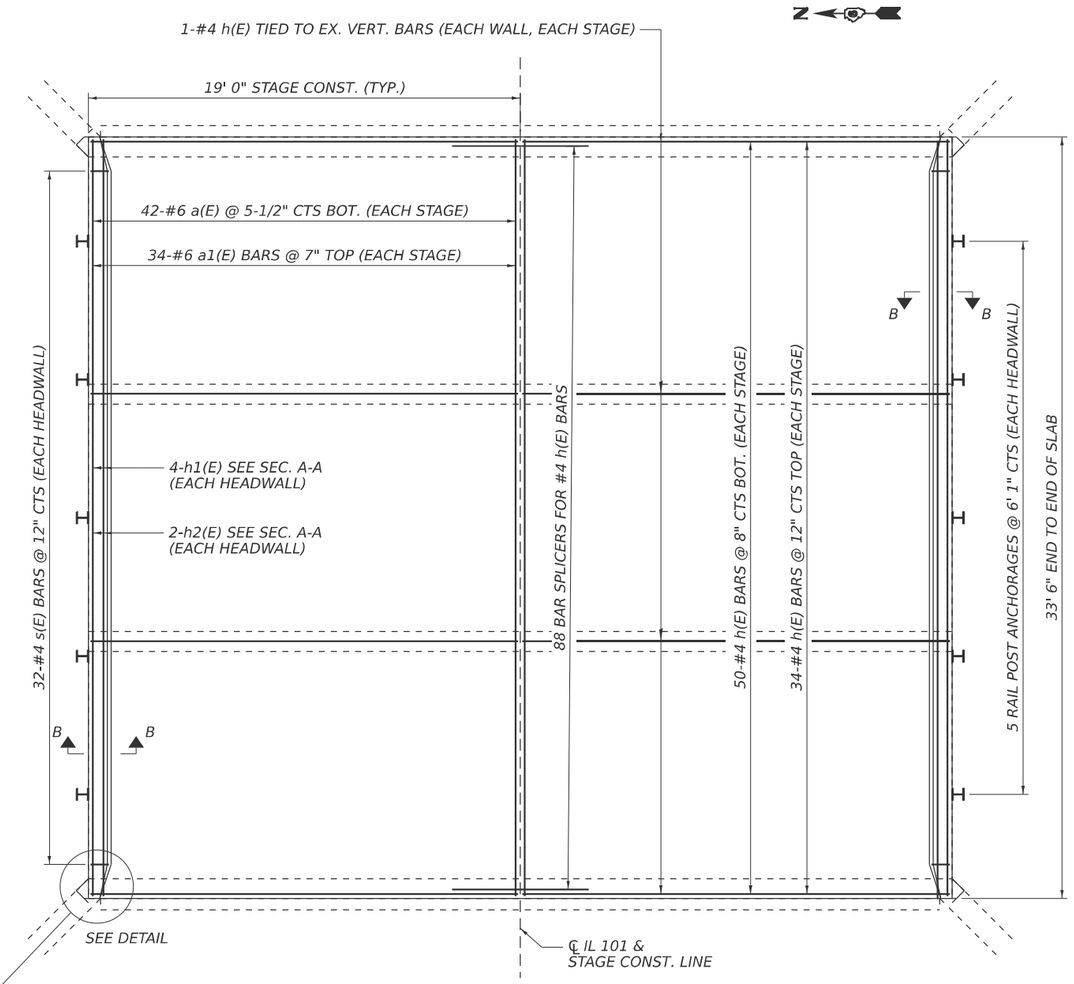

TOP SLAB PLAN

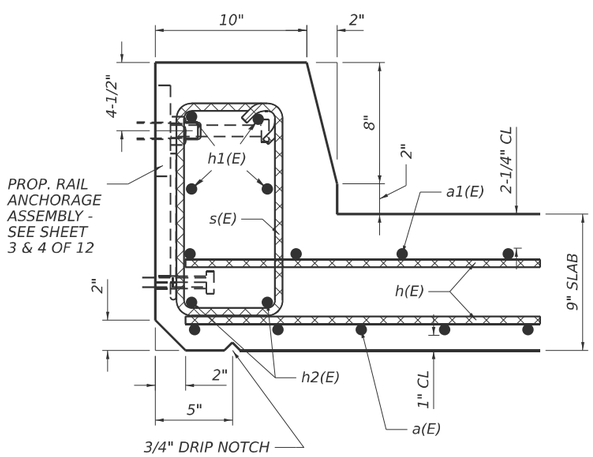

SECTION B-B

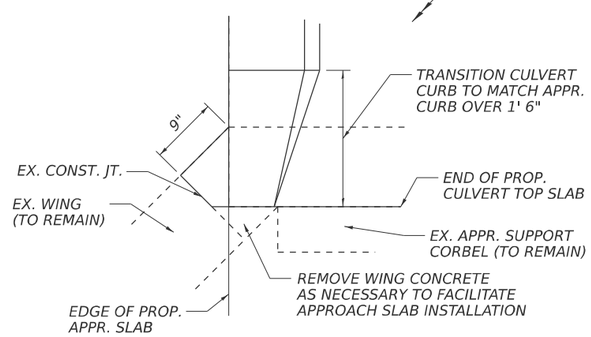

TYPICAL CORNER DETAIL

NOTE: SEE SHEET 3 OF 11 FOR BAR DETAILS AND TOP SLAB BILL OF MATERIAL

MODEL: bridge-1 [Sheet]
FILE NAME: c:\pw_work\pwidot\castrosotov\d1106099\085-2013 plans.dgn

USER NAME = Veronica.CastroSoto	DESIGNED -	REVISED -	
	DRAWN -	REVISED -	
	CHECKED -	REVISED -	
PLOT DATE = 12/5/2025	DATE -	REVISED -	

STATE OF ILLINOIS
DEPARTMENT OF TRANSPORTATION

CULVERT SLAB REPLACEMENT DETAILS
SN 085-2013

SCALE: | SHEET 2 OF 16 SHEETS | STA. | TO STA.

F.A.P RTE.	SECTION	COUNTY	TOTAL SHEETS	SHEET NO.
713	119RS-4, 120RS-5,CLV	SCHUYLER	56	37
		CONTRACT NO. 72762		
		ILLINOIS FED. AID PROJECT		

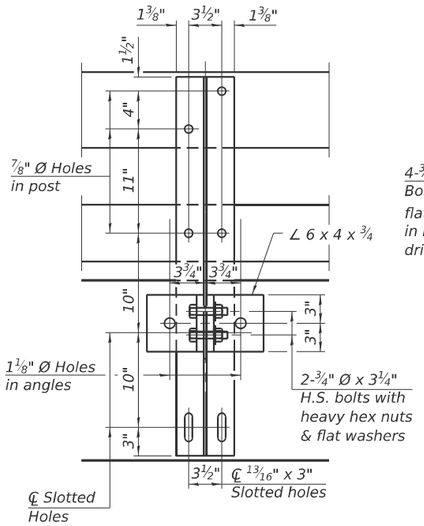

SECTION A-A

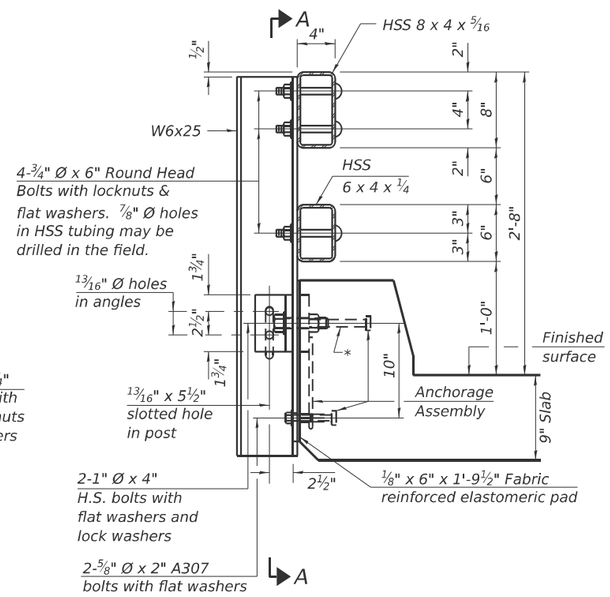

SECTION AT RAIL POST

* See Section B-B on sheet 2 of 12 for reinforcing placement around anchorages.

ALTERNATE RAIL POST DESIGN

(TO BE USED FOR ALL POSTS MOUNTED TO CULVERT TOP SLAB)

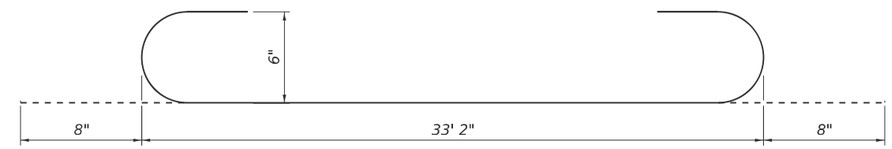

BAR a(E)

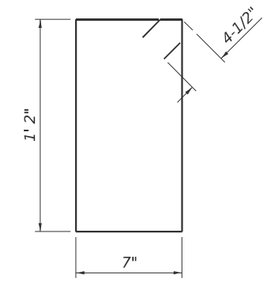

BAR s(E)

TOP SLAB REPLACEMENT

BILL OF MATERIAL

Bar	No.	Size	Length	Shape
a(E)	84	#6	34'-6"	
a1(E)	68	#6	33'-2"	
h(E)	176	#4	18'-8"	
h1(E)	8	#6	30'-6"	
h2(E)	4	#6	32'-2"	
s(E)	64	#4	4'-3"	
Concrete Removal			Cu. Yd.	39.8
Concrete Superstructure			Cu. Yd.	40.1
Reinforcement Bars, Epoxy Coated			Pound	10690
Bar Splicers			Each	88

MODEL: bridge-2 [Sheet]
FILE NAME: c:\pw_work\pwidot\castrosoto\d1106099\085-2013 plans.dgn

USER NAME = Veronica.CastroSoto	DESIGNED -	REVISED -	STATE OF ILLINOIS DEPARTMENT OF TRANSPORTATION
	DRAWN -	REVISED -	
	CHECKED -	REVISED -	
PLOT DATE = 12/5/2025	DATE -	REVISED -	

CULVERT SLAB REPLACEMENT DETAILS
SN 085-2013

SCALE: | SHEET 3 OF 16 SHEETS | STA. TO STA.

F.A.P RTE.	SECTION	COUNTY	TOTAL SHEETS	SHEET NO.
713	119RS-4, 120RS-5,CLV	SCHUYLER	56	38

CONTRACT NO. 72762

ILLINOIS | FED. AID PROJECT

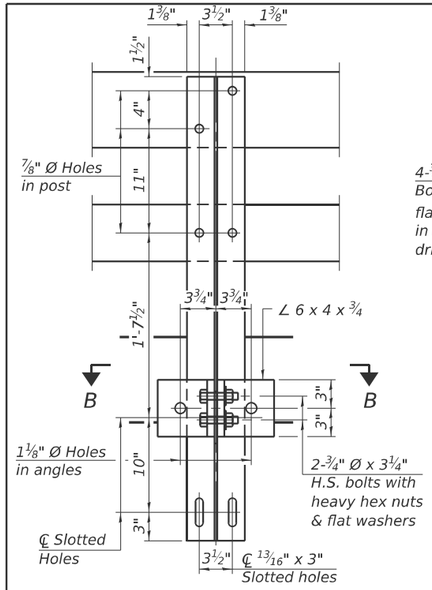

SECTION A-A

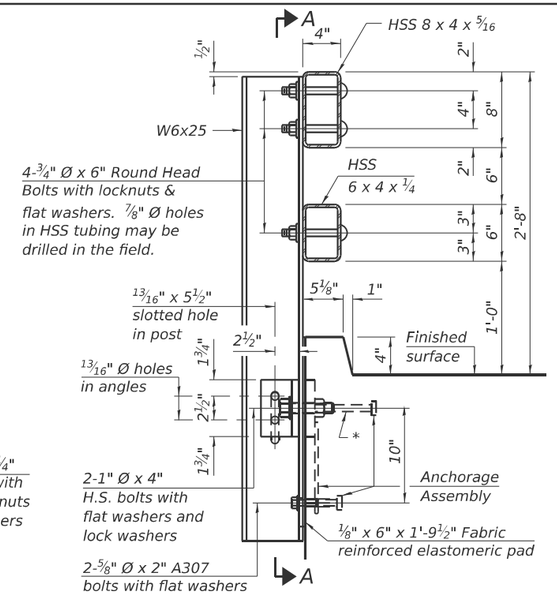

SECTION AT RAIL POST

* The outermost longitudinal reinforcement bar and 3 transverse reinforcement bars shall be placed directly above the studs of the rail post anchorage assembly as shown in the superstructure details.

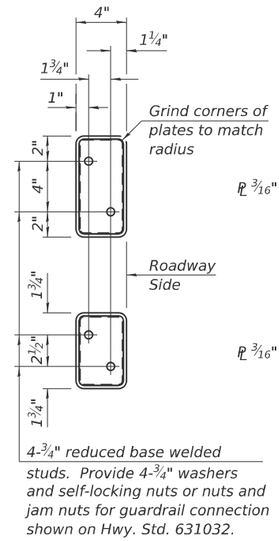

VIEW D-D

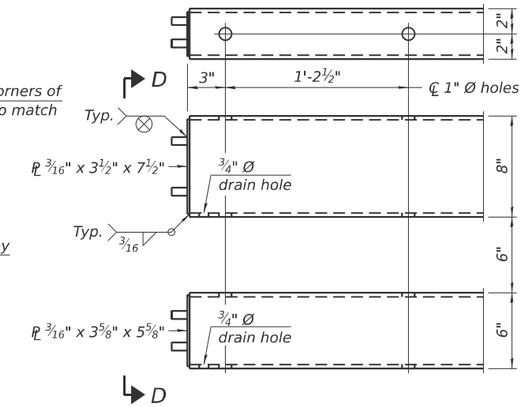

END OF RAIL DETAILS

Notes:

A sufficient number of shims of various thicknesses, sized 5" x 11½" (top) and 6" x 6" (bottom), shall be provided to adjust posts for proper alignment. If the summation of shims is greater than ¼" (top) or ½" (bottom), longer bolts are required. Cost included with Steel Railing, Type SM.

All steel rail elements including shims shall be galvanized according to Article 509.05 of the Standard Specifications.

All HSS tubing shall be CVN tested according to Article 1006.34(b) of the Standard Specifications.

Rail splice inserts may be built out of 2 -⅜" bent plates in lieu of the 4 plate rail splice inserts shown, provided the outside dimensions are matched.

All round head bolts shall be ASTM A307 with locknuts according to ASTM A563 grade A.

Tie bars shall be #4 reinforcement bar or ½" Ø ASTM F1554-55 round bar.

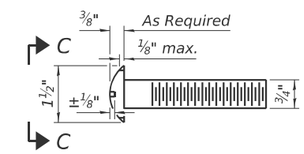

ROUND HEAD BOLT DETAIL

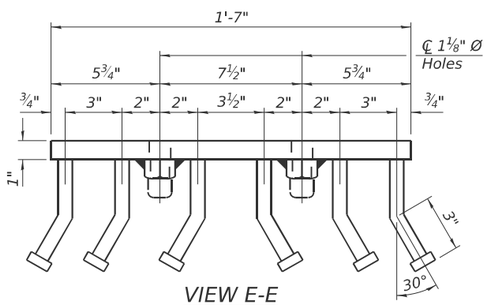

VIEW E-E

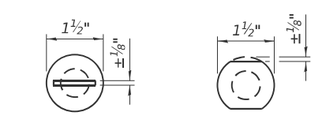

With Slot (shown) or Approved Recess

Without Slot or Recess

VIEW C-C

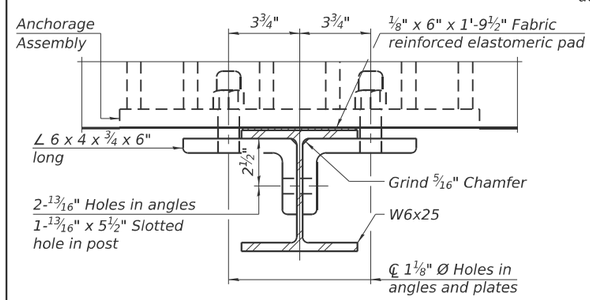

SECTION B-B

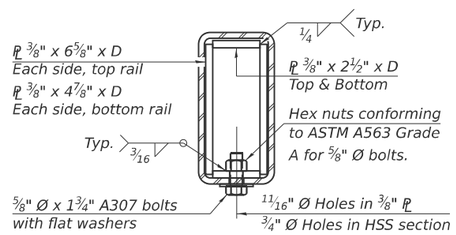

SECTION AT RAIL SPLICE

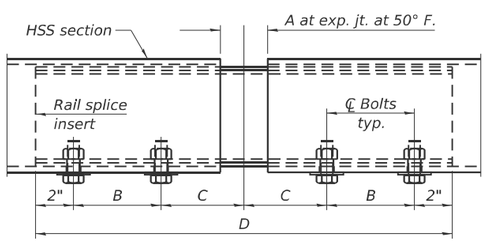

RAIL SPLICE ELEVATION

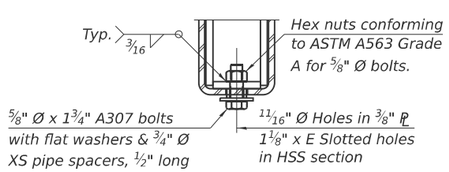

RAIL SPLICE CONNECTION AT EXPANSION JT.

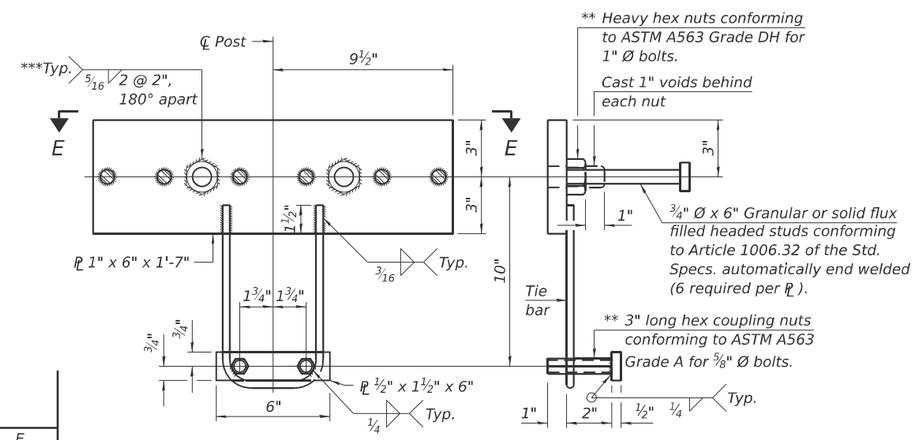

ANCHORAGE ASSEMBLY

** Threaded areas shall be plugged or blocked off during casting of concrete.

*** Alternatively provide ¼" all-around fillet weld.

RAILING CRITERIA

MASH 2016 Test Level	2
Railing Weight (plf)	90
Min f'c (psi)	5,000
Max Post Spacing	6'-3''
CWS thickness range (in)	5 - 7⅛

SPLICE DIMENSIONS

Location	T	A	B	C	D	E
All locs. not over exp. jts.	0	¼"	4"	4"	1'-8"	-
Over Strip Seal Jt.	≤4"	2½"	4⅝"	4⅜"	1'-10"	3 1/16"
Over Finger or Modular Jt.	≤9½"	5½"	7⅜"	7¼"	2'-9¼"	5 13/16"
Over Finger or Modular Jt.	≤15"	8¼"	10⅛"	10"	3'-8¼"	8 9/16"

T = ; total movement along centerline of roadway at expansion joint.

BILL OF MATERIAL

Item	Unit	Quantity
Steel Railing, Type SM	Foot	127

R-34CWSC 4-4-2025

MODEL: bridge-3 [Sheet]
FILE NAME: c:\pw_work\pwidot\casrosoto\d1106099\085-2013 plans.dgn

USER NAME = Veronica.CastroSoto	DESIGNED -	REVISED -
	DRAWN -	REVISED -
	CHECKED -	REVISED -
PLOT DATE = 12/5/2025	DATE -	REVISED -

STATE OF ILLINOIS
DEPARTMENT OF TRANSPORTATION

STEEL RAILING, TYPE SM
SN 085-2013

SCALE: SHEET 4 OF 16 SHEETS STA. TO STA.

F.A.P RTE.	SECTION	COUNTY	TOTAL SHEETS	SHEET NO.
713	119RS-4, 120RS-5,CLV	SCHUYLER	56	39

CONTRACT NO. 72762

ILLINOIS FED. AID PROJECT

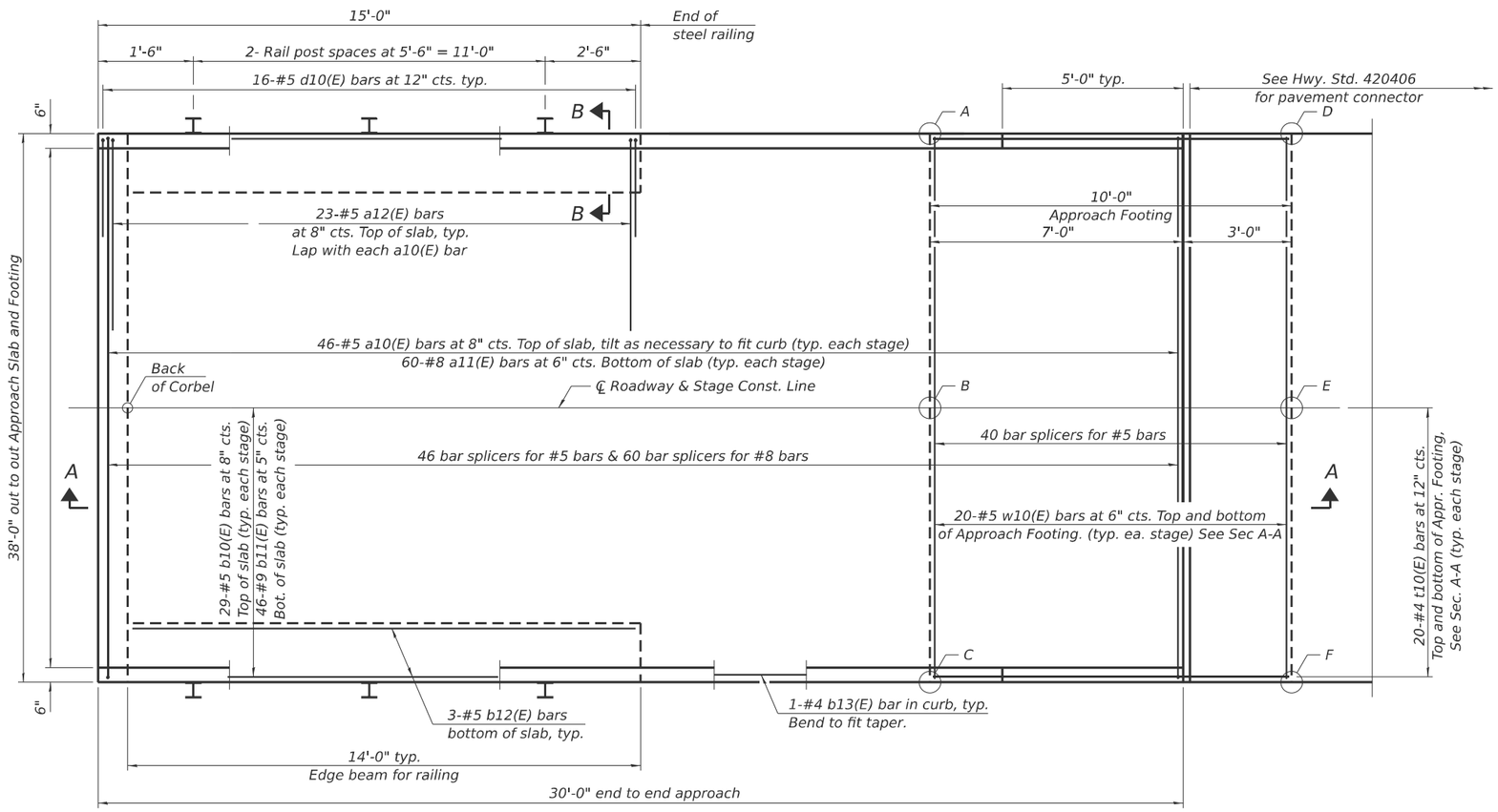

The proposed slab grades & elevations shall replicate the existing slab or roadway grades & elevations. The contractor shall record existing grades & elevations prior to beginning work. Cost included with Construction Layout.

PLAN

(E approach slab shown; W approach slab similar by 180° rotation)

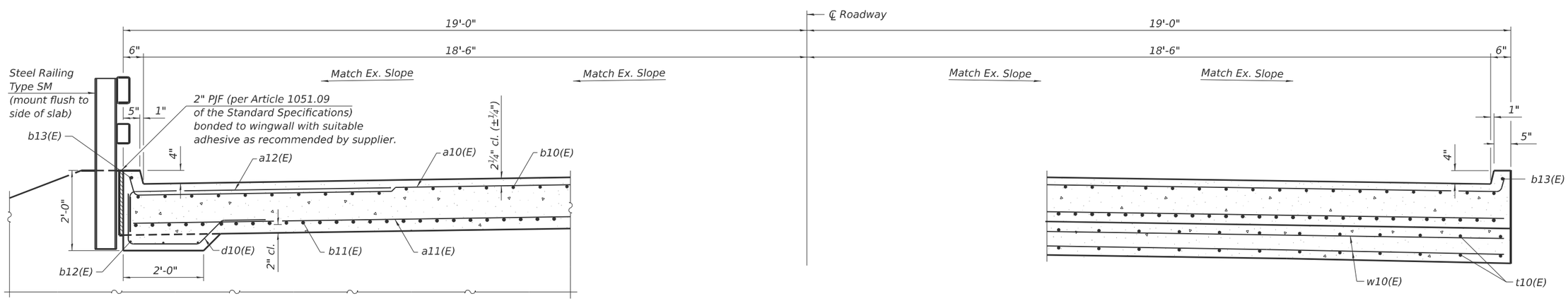

NEAR ABUTMENT

CROSS SECTION

(Looking West)

AT APPROACH FOOTING

BAIA-CIP-R34C-0 4-4-2025

(Sheet 1 of 2)

MODEL: bridge-4 [Sheet]
FILE NAME: c:\pw_work\pwidot\castrosotov\d1106099\085-2013 plans.dgn

USER NAME = Veronica.CastroSoto	DESIGNED -	REVISED -	
	DRAWN -	REVISED -	
	CHECKED -	REVISED -	
PLOT DATE = 12/5/2025	DATE -	REVISED -	

STATE OF ILLINOIS
DEPARTMENT OF TRANSPORTATION

APPROACH SLAB DETAILS
SN 085-2013

SCALE: SHEET 5 OF 16 SHEETS STA. TO STA.

F.A.P RTE.	SECTION	COUNTY	TOTAL SHEETS	SHEET NO.
713	119RS-4, 120RS-5,CLV	SCHUYLER	56	40
		CONTRACT NO. 72762		
		ILLINOIS FED. AID PROJECT		

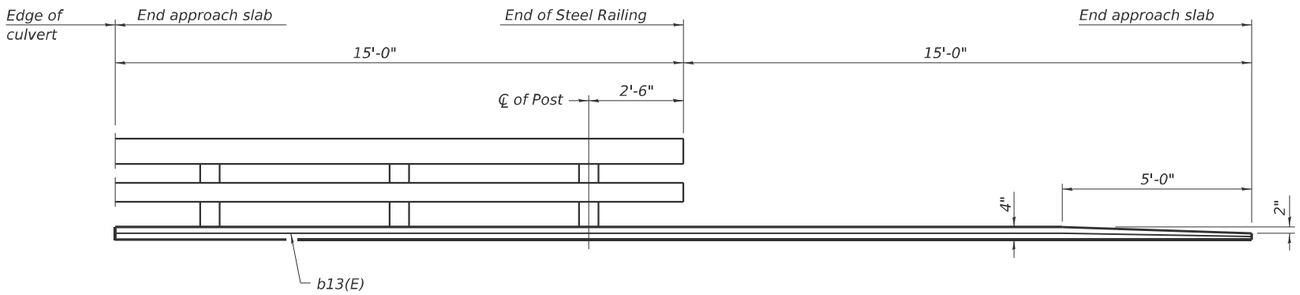

INSIDE ELEVATION OF RAILING AND CURB

Notes:
The end of slab joint shall be omitted due to using a flexible pavement connector.
Approach slab shall be paid for as Concrete Superstructure (Approach Slab).
Approach footing concrete shall be paid for as Concrete Structures.
The approach footing maximum applied service bearing pressure (Qmax) = 2.0 ksf.
Cost of excavation for approach footing included with Concrete Structures.
Granular Backfill for Structures does not apply.
For railing details, see sheet 4 of 12.

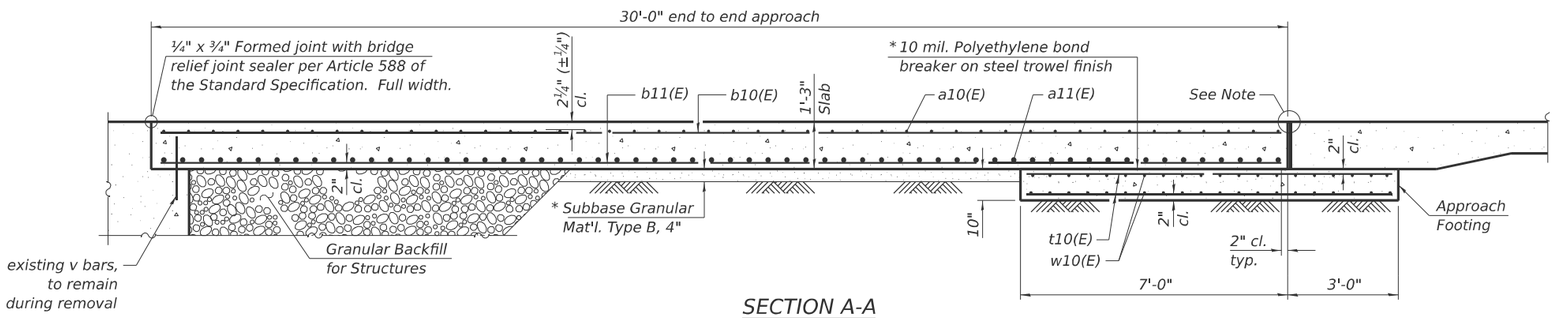

SECTION A-A

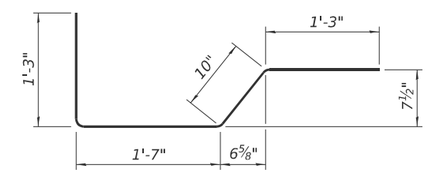

BAR d10(E)

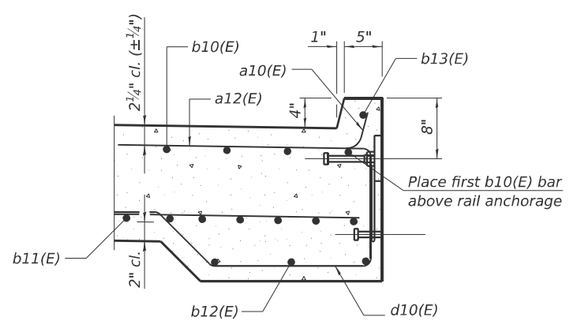

SECTION B-B

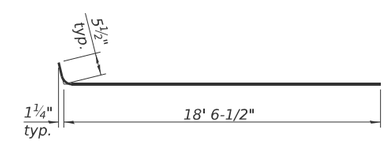

BAR a10(E)

BAR a12(E)

TWO APPROACHES
BILL OF MATERIAL

Bar	No.	Size	Length	Shape
a10(E)	184	#5	19'-0"	
a11(E)	240	#8	18'-8"	
a12(E)	92	#5	7'-8"	
b10(E)	116	#5	29'-8"	
b11(E)	184	#9	29'-8"	
b12(E)	12	#5	13'-8"	
b13(E)	4	#4	29'-8"	
d10(E)	64	#5	4'-11"	
t10(E)	160	#4	9'-8"	
w10(E)	160	#5	18'-8"	
Concrete Superstructure (Approach Slab)			Cu. Yd.	108.3
Concrete Structures			Cu. Yd.	23.5
Reinforcement Bars, Epoxy Coated			Pound	43220
Bar Splicers			Each	292

BAIA-CIP-R34C-0 4-4-2025

(Sheet 2 of 2)

MODEL: bridge-5 [Sheet]
FILE NAME: c:\pw_work\pwidot\castrosotov\d1106099\085-2013 plans.dgn

USER NAME = Veronica.CastroSoto	DESIGNED -	REVISED -	STATE OF ILLINOIS DEPARTMENT OF TRANSPORTATION
	DRAWN -	REVISED -	
	CHECKED -	REVISED -	
PLOT DATE = 12/5/2025	DATE -	REVISED -	

APPROACH SLAB DETAILS
SN 085-2013

SCALE: SHEET 6 OF 16 SHEETS STA. TO STA.

F.A.P RTE.	SECTION	COUNTY	TOTAL SHEETS	SHEET NO.
713	119RS-4, 120RS-5,CLV	SCHUYLER	56	41

CONTRACT NO. 72762
ILLINOIS FED. AID PROJECT

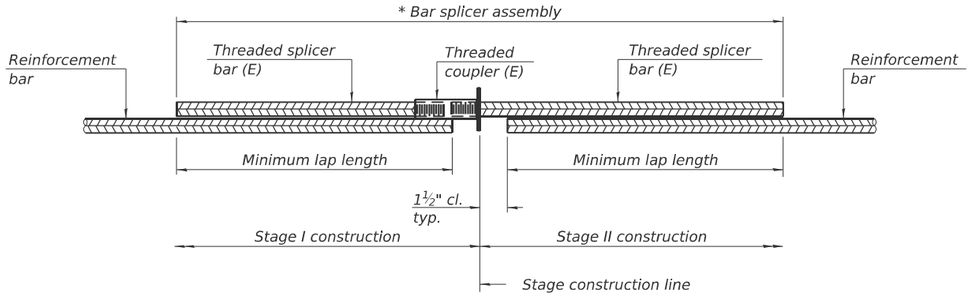

STANDARD BAR SPLICER ASSEMBLY PLAN

Only bar splicer assemblies as presented on the approved QPL list may be used.

Threaded splicer bar length = min. lap length + 1½" + thread length

* Epoxy not required on Bar Splicer Assembly components used in conjunction with black bars.

Location	Bar size	No. assemblies required	Minimum lap length
culvert top slab	#4	88	2'-5"
sleeper slab	#5	80	3'-6"
appr. slab top mat	#5	92	3'-6"
appr. slab bot. mat	#8	120	4'-9"

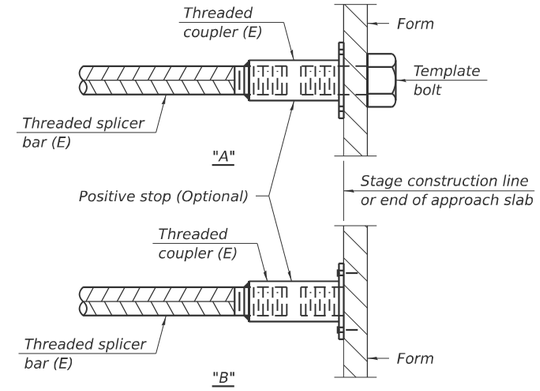

INSTALLATION AND SETTING METHODS

"A" : Set bar splicer assembly by means of a template bolt.
"B" : Set bar splicer assembly by nailing to wood forms or cementing to steel forms.
(E) : Indicates epoxy coating.

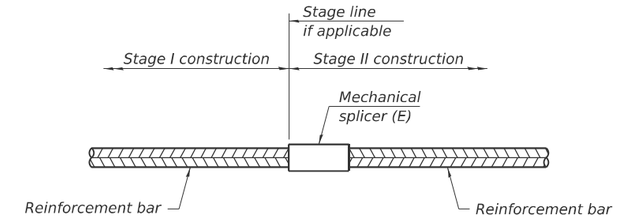

STANDARD MECHANICAL SPLICER

Location	Bar size	No. assemblies required

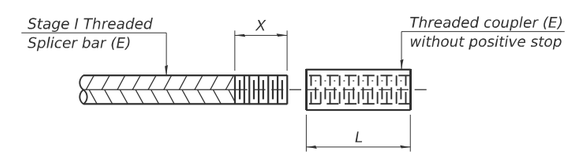

THREADING OF ASSEMBLIES

The threaded length "X" shall be no more than L/2. The bar should be tightened until 0-1 thread(s) is/are exposed.

Notes:
Splicer bars shall be deformed with threaded ends and have a minimum 60 ksi yield strength.
All reinforcement shall be lapped and tied to the splicer bars.
Bar splicer assemblies shall be epoxy coated according to the requirements for reinforcement bars. See Section 508 of the Standard Specifications.
See approved list of bar splicer assemblies and mechanical splicers for alternatives.

BSD-1 4-4-2025

MODEL: bridge-6 [Sheet]
FILE NAME: c:\pw_work\pwidot\castrosoto\d1106099\085-2013 plans.dgn

USER NAME = Veronica.CastroSoto	DESIGNED -	REVISED -
	DRAWN -	REVISED -
	CHECKED -	REVISED -
PLOT DATE = 12/5/2025	DATE -	REVISED -

STATE OF ILLINOIS
DEPARTMENT OF TRANSPORTATION

BAR SPLICER ASSEMBLY & MECHANICAL SPLICER DETAILS
SN 085-2013

SCALE: SHEET 7 OF 16 SHEETS STA. TO STA.

F.A.P RTE.	SECTION	COUNTY	TOTAL SHEETS	SHEET NO.
713	119RS-4, 120RS-5,CLV	SCHUYLER	56	42

CONTRACT NO. 72762

ILLINOIS FED. AID PROJECT

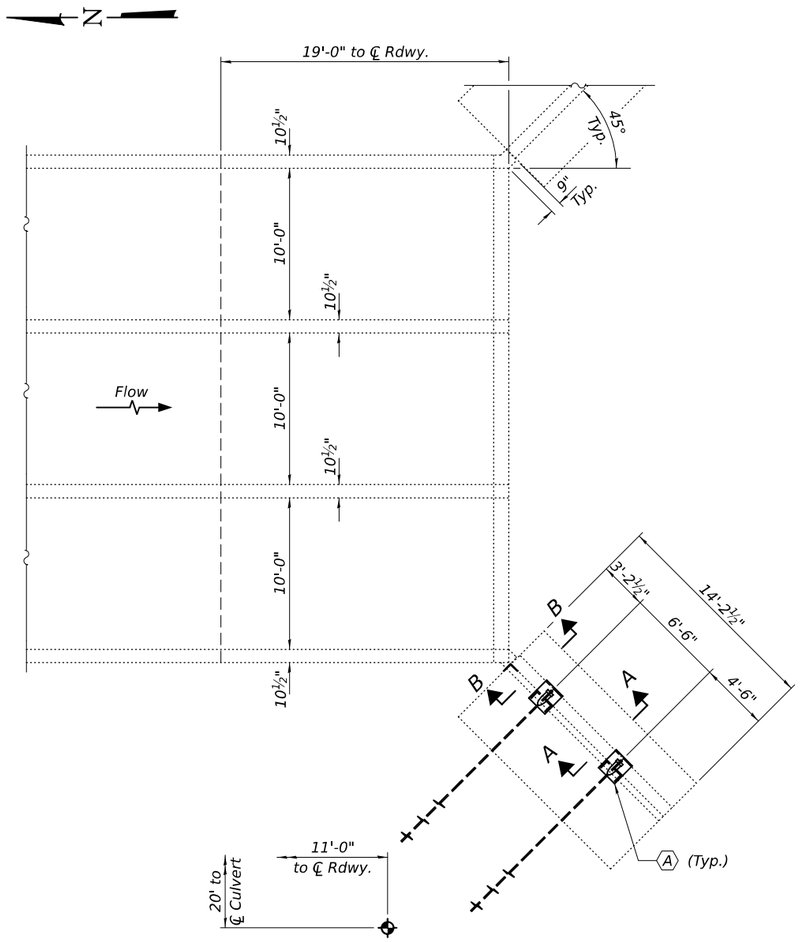

PARTIAL PLAN

Ⓐ - Straighten existing wingwall using Helical Ground Anchors.

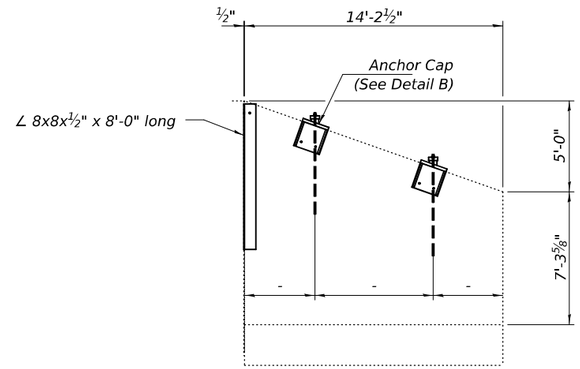

ELEVATION

(Inside Face)

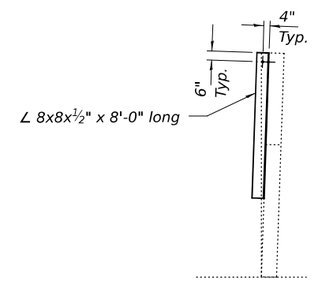

SEC B-B

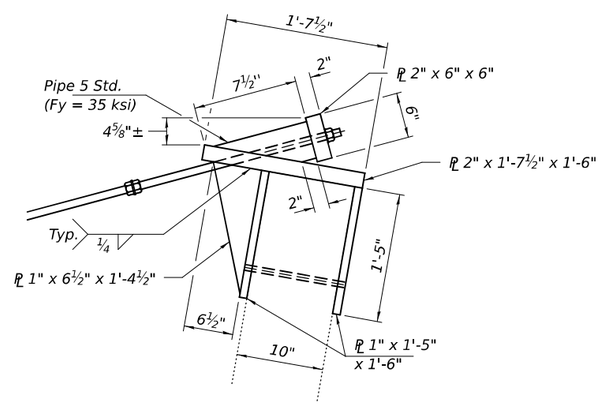

DETAIL "A"

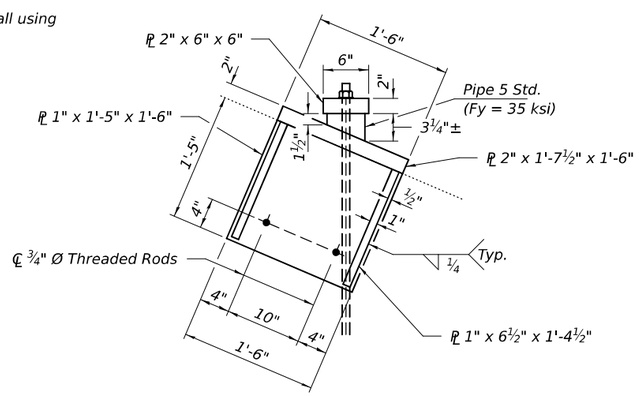

DETAIL "B"

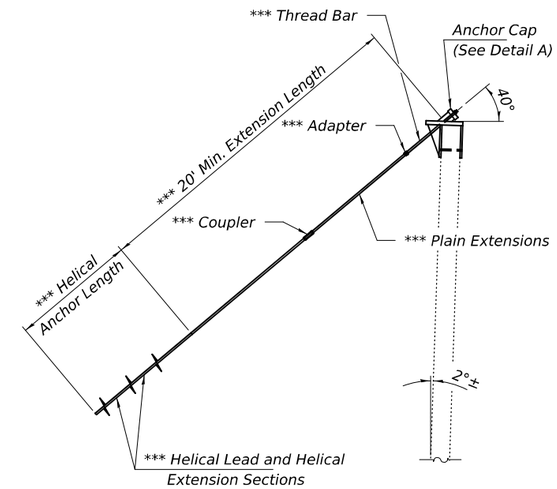

*** See Helical Anchor Supplier for design and details.

SEC A-A

GENERAL NOTES

All structural steel shall conform to AASHTO Classification M-270 Gr. 36, unless otherwise noted.

Plan dimensions and details relative to the existing structure have been taken from existing plans are subject to nominal construction variations. The Contractor shall field verify existing dimensions and details affecting new construction and make necessary approved adjustments prior to construction or ordering of materials. Such variations shall not be cause for additional compensation for a change in scope of the work, however, the Contractor will be paid for the quantity actually furnished at the unit price bid for the work.

All new structural steel and bearing assemblies shall be hot-dip galvanized. See Special Provisions for "Hot Dip Galvanizing for Strutural Steel".

1. Helical Anchor shall be designed by manufacturer. (See Special Provisions).
2. The Contractor shall submit design calculations and shop drawing for the proposed Helical Ground Anchor to the Engineer for review and approval.
3. Helical anchor design load (Service) = 19 K/Anchor.
4. All anchor components shall be galvanized according to Article 509.05 of the Standard Specifications.
5. Cost of steel plates, washers, and nuts included in the cost of Helical Ground Anchors.

DESIGN STRESSES

fy = 35 ksi (Pipes)

TOTAL BILL OF MATERIAL

ITEM	UNIT	QUANTITY
Helical Gound Anchor	Each	2
Structural Steel Repair	Pound	220

MODEL: 72762-055
FILE NAME: pw://ildot-pw.bentley.com:PWIDOT/Documents/IDOT O ces/Bureau of Bridges and Structures/OBM Projects/0852013/CADData/Structures/0852013.dgn

DESIGNED - JSB	EXAMINED	DATE - JANUARY 20, 2026	STATE OF ILLINOIS DEPARTMENT OF TRANSPORTATION
CHECKED - WMK	ENGINEER OF STRUCTURAL SERVICES		
DRAWN - daburdett	PASSED	REVISED -	
CHECKED - JSB WMK	ACTING ENGINEER OF BRIDGES AND STRUCTURES	REVISED -	

1/20/2026 9:59:52 AM

HELICAL ANCHOR DETAIL
SN 085-2013

SHEET 8 OF 16 SHEETS

F.A.P. RTE.	SECTION	COUNTY	TOTAL SHEETS	SHEET NO.
713	119RS-4, 120RS-5,CLV	SCHUYLER	56	43

CONTRACT NO. 72762

ILLINOIS FED. AID PROJECT

Illinois Department of Transportation
Division of Highways
District 6

SOIL BORING LOG

Date 4/16/25

ROUTE IL 101 DESCRIPTION SW wingwall of box culvert East of Brooklyn LOGGED BY S. Burke

SECTION _____ LOCATION _____, SEC. , TWP. , RNG. , PM

COUNTY Schuyler DRILLING METHOD HSA HAMMER TYPE 140# Auto

STRUCT. NO. 085-2013Ex
Station _____

BORING NO. 1-SW
Station 585+58
Offset 11.0ft RT
Ground Surface Elev. 494.76 ft

Surface Water Elev. _____ ft
Stream Bed Elev. _____ ft

Groundwater Elev.:
First Encounter _____ ft
Upon Completion _____ ft
After ____ Hrs. _____ ft

Description	Elev.	DEPTH (ft)	BLOWS /6"	UCS Qu (tsf)	MOIST (%)
Cored thru pavement and subbase	493.26				
Lt Brown Moist SILTY CLAY (FILL)			0 2 2	0.7 B	27
		-5			
Lt Brown to Gray	485.76		W O H 4	0.5 B	27
Dk Gray Moist CLAY LOAM w/ woody organics no recovery 9-10'		-10	2 3 1		
			2 3 1	1.1 B	27
Gray to Dk Gray		-15	2 2 W	0.7 B	28
Gray V. Moist to Wet Clay Loam w/ sand lenses			O H W	0.1 B	32
Lt Gray Clay Loam w/ iron oxide nodules		-20	OH 2	0.5 B	24
FREE WATER	473.76				
Gray Moist SILT LOAM w/ 2" sand seam @22'			W OH 2 1	0.6 B	53
Dk Reddish Brown Dry Silt Loam	469.76	-25	3 3	0.5 S-12	124
		-30			
		-35			
		-40			

The Unconfined Compressive Strength (UCS) Failure Mode is indicated by (B-Bulge, S-Shear, P-Penetrometer, E-Estimated)
Abbreviations W.O.H - Sampler Advanced By Weight of Hammer, W.O.P - Advanced by Weight of Pipe, B.S. - Before Seating
The SPT (N value) is the sum of the last two blow values in each sampling zone (AASHTO T206) BBS, from 137 (Rev. 8-99)

File Name S:\SOILS\GINT FILES\085 SCHUYLER\CULVERT BORINGS\085-2013 BCX CULVERT WING WALL.GPJ Data Template D6TEMPLT.GDT Date Printed 5/7/25
Latitude Longitude Datum NAD83 Job Number

MODEL: bridge-8 [Sheet]
FILE NAME: c:\pw_work\pwidot\castrosotov\d1106099\085-2013 plans.dgn

USER NAME = Veronica.CastroSoto	DESIGNED -	REVISED -	STATE OF ILLINOIS DEPARTMENT OF TRANSPORTATION
	DRAWN -	REVISED -	
	CHECKED -	REVISED -	
PLOT DATE = 12/5/2025	DATE -	REVISED -	

SOIL BORINGS
SN 085-2013

SCALE: SHEET 9 OF 16 SHEETS STA. TO STA.

F.A.P RTE.	SECTION	COUNTY	TOTAL SHEETS	SHEET NO.
713	119RS-4, 120RS-5,CLV	SCHUYLER	56	44

CONTRACT NO. 72762
ILLINOIS FED. AID PROJECT

ROUTE NO.	SECTION	COUNTY	TOTAL SHEETS	SHEET NO.
F.A.P. F.A.-713	120B-1	SCHUYLER	19	10
FED. ROAD DIST. NO. 7	ILLINOIS	FED. AID PROJECT		

SHEET NO. 1
6 SHEETS

STATE OF ILLINOIS
DEPARTMENT OF TRANSPORTATION

Bench Mark: Chiseled "□" on top of S.W. wingwall of box culvert. Sta. 586+06 Elev. 494.59

Existing Structure: #085-2005 Built as S.B.I. Rte. 101, Sec. 120-B, of Sta. 586+06 in 1929. The existing 10'-0" by 9'-0" three barrel culvert is 24'-0" ± long by 33'-0" wide. The existing culvert shall be removed and a new culvert built utilizing stage construction so as to maintain one way traffic during reconstruction.

No salvage.

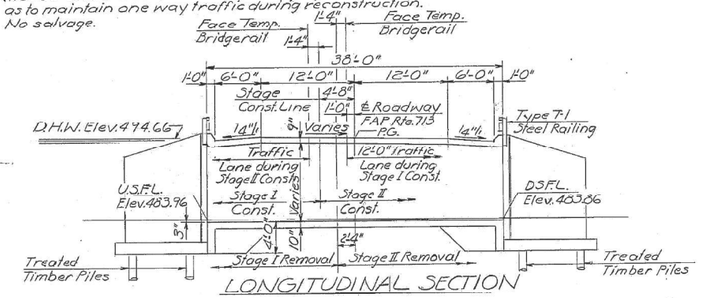

LONGITUDINAL SECTION

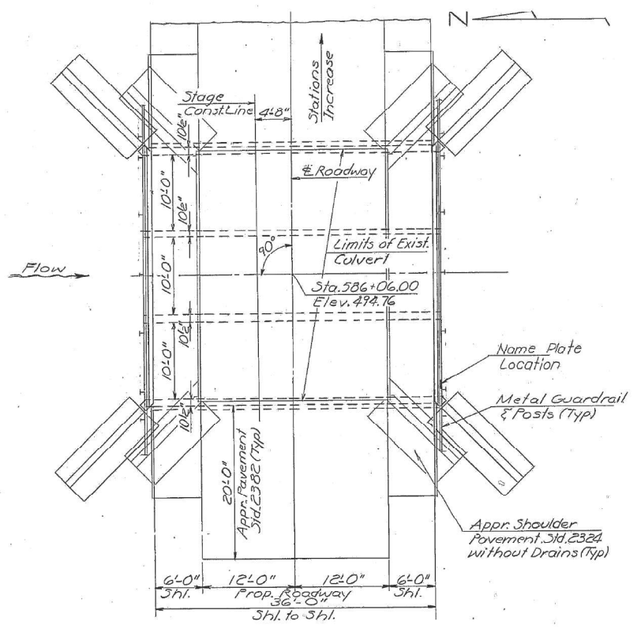

PLAN

Boring No. 2

CURVE DATA

P.I. Sta. 580+69.70
Δ = 54°-52' Rt.
D = 5°-30'
T = 540.8'
L = 997.6'
R = 1041.8'
P.C. Sta. 575+28.90
P.T. Sta. 585+26.50
Prop. S.E. = 0.08%
Prop. S.A.:
Sta. 573+84.90 to Sta. 576+00.90
Sta. 584+54.50 to Sta. 586+70.50

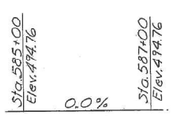

PROFILE GRADE

GENERAL NOTES

Class X Concrete shall be used throughout.
Reinforcement bars shall conform to the requirements of A.A.S.H.T.O. M-31 or M-53, Grade 60.
All exposed edges shall be beveled ¾".
For backfilling and embankment see Standard Specifications.
See Proposal for Boring Data.
The contractor shall drive one timber test pile in a permanent location at the Southwest wingwall as directed by the Engineer before ordering the remainder of piles.

See Detail "A"

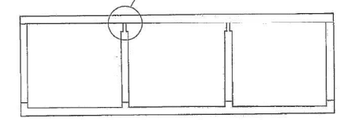

SECTION THRU BARRELS NEAR DOWNSTREAM END

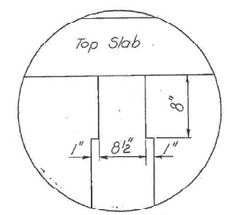

DETAIL "A"

Note: Notch formed by rough finished board attached to and removed with falsework.

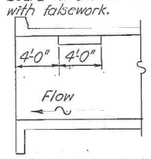

LONGITUDINAL SECTION

PHOEBE NESTING SITE DETAILS

STATION 586+06.00
BUILT 19 BY
STATE OF ILLINOIS
F.A.P. RT. 713 SEC. 120B-1
F.A. PROJECT BRF-713 (2)
LOADING HS20
** STR. NO.

** Structure Number to be supplied by District.

NAME PLATE
(See Std. 2113)

TOTAL BILL OF MATERIAL

Item	Unit	Total
Removal of Existing Structures	Each	1
Class X Concrete Box Culverts	Cu. Yd.	192.5
Protective Coat	Sq. Yd.	158
Steel Railing, Type T-1	Lin. Ft.	67
Reinforcement Bars	Pound	24830
Reinforcement Bars (Epoxy Coated)	Pound	3960
Name Plates	Each	1
Temporary Bridge Rail	Lin. Ft.	34
Creosoted Piles 20.1 to 38 Feet	Lin. Ft.	759
Test Pile Timber	Each	1

WATERWAY INFORMATION

Drainage Area 789 Sq. Miles Low Grade Elev. 494.2 @ Sta. 587+00

Flood		Freq. Yr.	Q C.F.S.	Opening Sq. Ft. Exist.	Opening Sq. Ft. Prop.	Nat. H.W.E.	Created Hd. Ft. Exist	Created Hd. Ft. Prop.	Hdwater Elev. Exist.	Hdwater Elev. Prop.
Design	Mn. Chnnl.	50	*3300 23490	6565	6565	494.66	.55	.55	495.21	495.21
	Overflow		1410	300	300					
	Total		30200	6865	6865					
Base	Mn. Chnnl.	100	*11425 21375	6802	6802	495.16	.39	.39	495.55	495.55
	Overflow		1185	300	300					
	Total		34200	7102	7102					
Max. or Overfl.	Mn. Chnnl.	40	21875	6079	6079	493.63	.57	.57	494.2	494.2
	Overflow		1425	300	300					
	Total		23300	6379	6379					

* Wier Flow

DESIGN STRESSES

fc = 3500 psi
fy = 60,000 psi

Epoxy coated Reinforcement bars shall be used in the top layer of culvert deck slab.

Allow 25#/sq. ft. for Future wearing surface.

Design Specifications: 1977 AASHTO, 1978 thru 1982 interim specs.

LOADING HS20-44

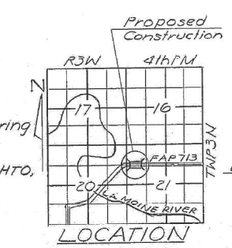

LOCATION SKETCH

GENERAL PLAN
ILL. RTE. 101 OVER
LAMOINE RIVER OVERFLOW
F.A.P. ROUTE 713
SECTION 120B-1
SCHUYLER COUNTY
STATION 586+06.00

DESIGNED	M. Bloxdorf
CHECKED	Rick Brunette
DRAWN	R. Doty
CHECKED	GR

June 21 1983
EXAMINED James T. Rayburn — ENGINEER OF BRIDGE DESIGN
PASSED Carl E. Thurnhan — ENGINEER OF BRIDGES AND STRUCTURES
APPROVED — DIRECTOR OF HIGHWAYS

CARL E. THURNHAN JR. STATE OF ILLINOIS 2287 REGISTERED STRUCTURAL ENGINEER

1-28-83 3-8-83

MODEL: bridge-9 [Sheet]
FILE NAME: c:\pw_work\pwidot\castrosoto\d1106099\085-2013 plans.dgn

USER NAME = Veronica.CastroSoto	DESIGNED -	REVISED -
	DRAWN -	REVISED -
	CHECKED -	REVISED -
PLOT DATE = 12/5/2025	DATE -	REVISED -

STATE OF ILLINOIS
DEPARTMENT OF TRANSPORTATION

EXISTING CULVERT PLANS, SN 085-2013
(FOR INFORMATION ONLY)

SCALE: | SHEET 10 OF 16 SHEETS | STA. | TO STA.

F.A.P. RTE.	SECTION	COUNTY	TOTAL SHEETS	SHEET NO.
713	119RS-4, 120RS-5, CLV	SCHUYLER	56	45

CONTRACT NO. 72762
ILLINOIS | FED. AID PROJECT

ROUTE NO.	SECTION	COUNTY	TOTAL SHEETS	SHEET NO.
F.A.P. 713	120B2	SCHUYLER	19	13
FED. ROAD DIST. NO. 7	ILLINOIS	FED. AID PROJECT-		

SHEET NO. 4
6 SHEETS

STATE OF ILLINOIS
DEPARTMENT OF TRANSPORTATION

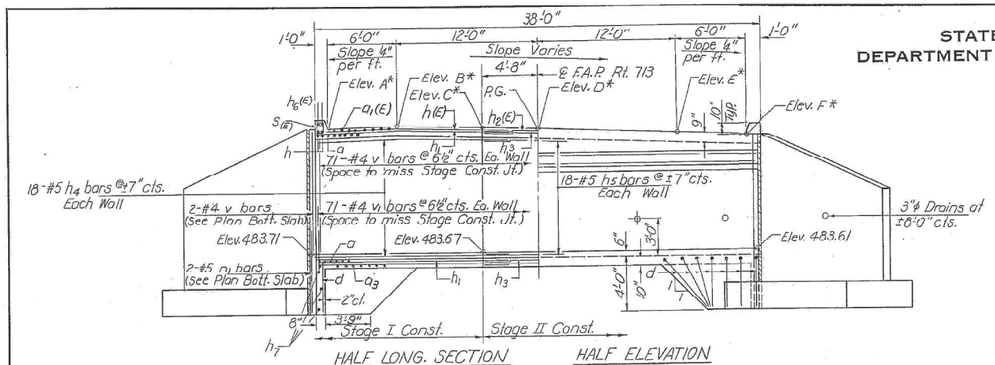

HALF LONG. SECTION

HALF ELEVATION

Notes:
Reinforcement bars designated (E) shall be epoxy coated. See Special Provisions.
Work this sheet with details on sheet #5.

*TOP OF SLAB ELEVATIONS

Location	Elev. A	Elev. B	Elev. C	Elev. D	Elev. E	Elev. F
West Wall	494.88	495.00	494.85	494.76	494.28	494.16
W. Center Wall	494.82	494.94	494.83	494.76	494.32	494.20
E. Center Wall	494.76	494.89	494.81	494.76	494.36	494.24
East Wall	494.70	494.83	494.79	494.76	494.40	494.28

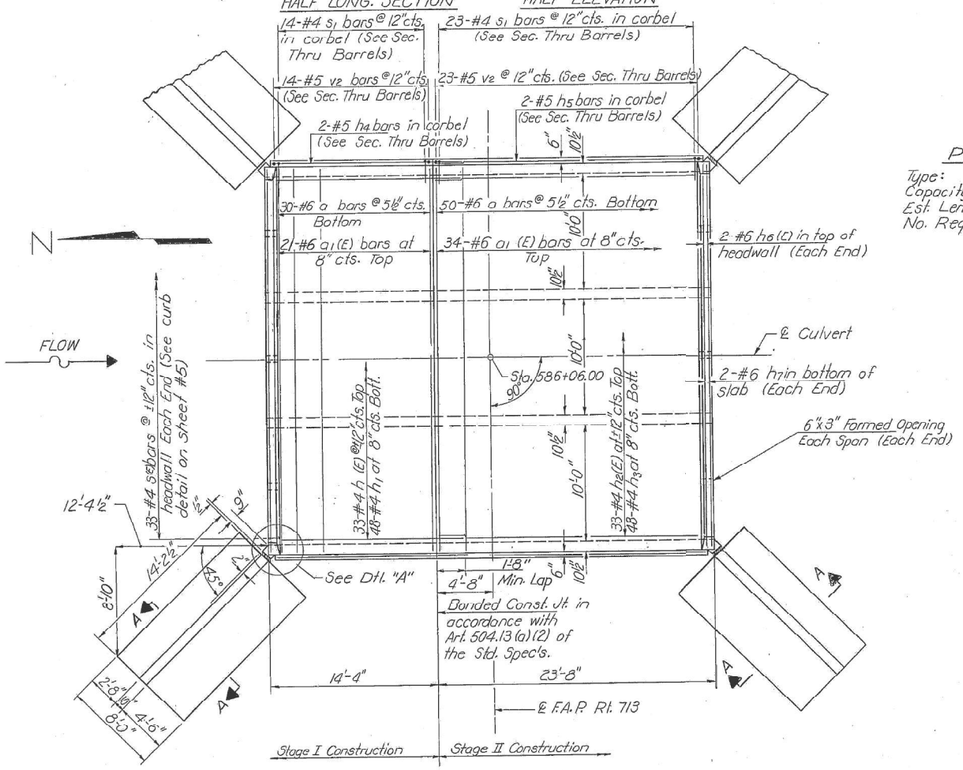

PLAN OF TOP SLAB

PILE DATA

Type: Creosoted
Capacity: 15 Tons
Est. Length: 33'
No. Req'd: 23 plus 1 test pile in a permanent location.

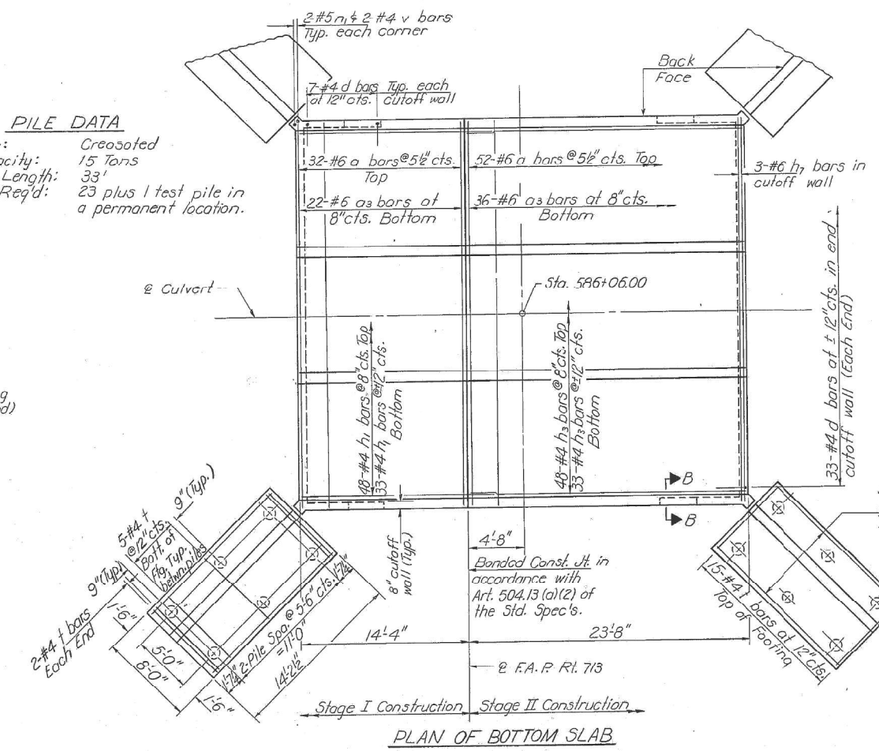

PLAN OF BOTTOM SLAB

DESIGNED	M. Bloxdorf
CHECKED	Rick Brunette
DRAWN	R. Doty
CHECKED	GR

June 21 1983
EXAMINED James T. Rankin — ENGINEER OF BRIDGE DESIGN
PASSED — ENGINEER OF BRIDGES AND STRUCTURES
APPROVED — DIRECTOR OF HIGHWAYS

CULVERT DETAILS
F.A.P. RT. 713 SEC. 120B-1
SCHUYLER COUNTY
STA. 586+06.00

MODEL: bridge-10 [Sheet]
FILE NAME: c:\pw_work\pwidot\castrosotov\d1106099\085-2013 plans.dgn

USER NAME = Veronica.CastroSoto	DESIGNED -	REVISED -	
	DRAWN -	REVISED -	
	CHECKED -	REVISED -	
PLOT DATE = 12/5/2025	DATE -	REVISED -	

STATE OF ILLINOIS
DEPARTMENT OF TRANSPORTATION

EXISTING CULVERT PLANS, SN 085-2013
(FOR INFORMATION ONLY)

SCALE: SHEET 11 OF 16 SHEETS STA. TO STA.

F.A.P RTE.	SECTION	COUNTY	TOTAL SHEETS	SHEET NO.
713	119RS-4, 120RS-5,CLV	SCHUYLER	56	46
		CONTRACT NO. 72762		
		ILLINOIS FED. AID PROJECT		

DRAWING NO.	SECTION	COUNTY	TOTAL SHEETS	SHEET NO.
R.B.I. F.A.713	120B-1	SCHUYLER	19	14
FED. ROAD DIST. NO. 7	ILLINOIS	FED. AID PROJECT-		

SHEET NO. 5
6 SHEETS

STATE OF ILLINOIS
DEPARTMENT OF TRANSPORTATION

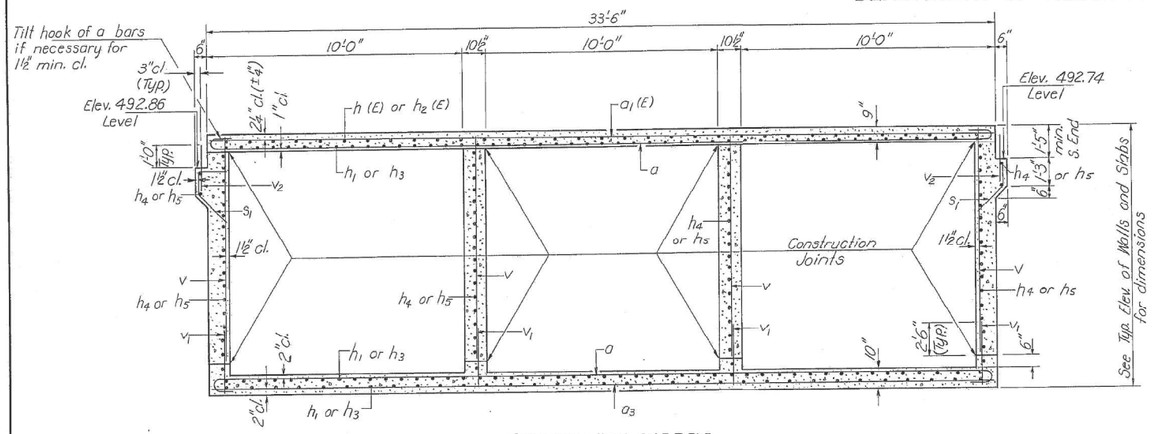

SECTION THRU BARRELS
(LOOKING SOUTH)

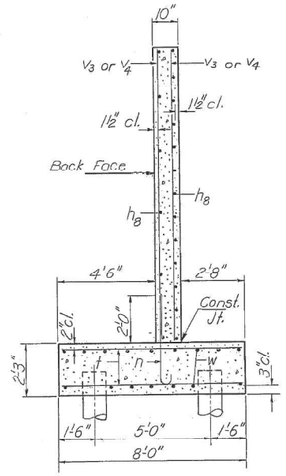

SECTION A-A

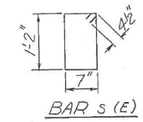

BAR s (E)

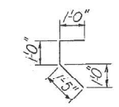

BAR s1

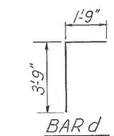

BAR d

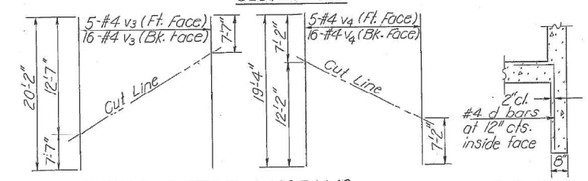

** FIELD CUTTING DIAGRAMS
Order v_3 and v_4 bars full length. Cut to fit as shown and use remainder of v_3 bars in opposite North Wing and remainder of v_4 bars in opposite S. Wing

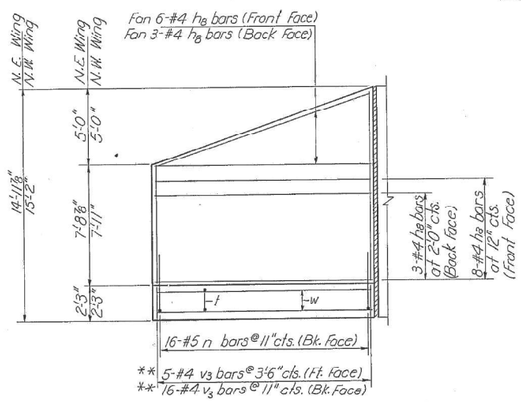

ELEVATION OF NORTH WINGS

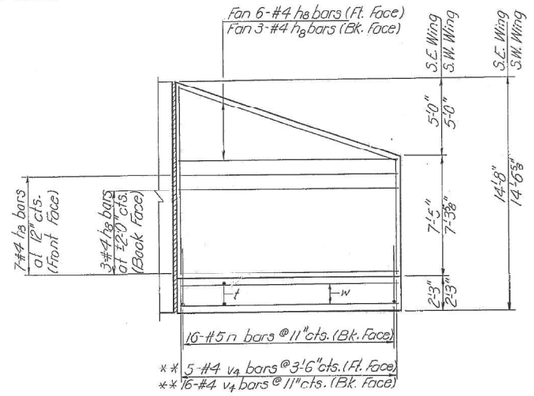

ELEVATION OF SOUTH WINGS

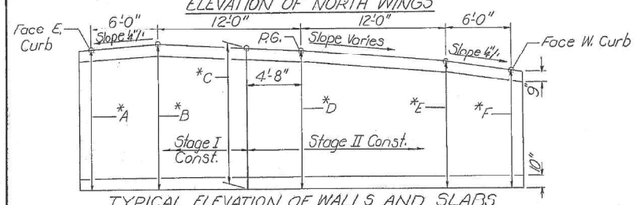

TYPICAL ELEVATION OF WALLS AND SLABS
(LOOKING EAST)

* TABLE OF DIMENSIONS

Location	A	B	C	D	E	F
West Wall	12'-0"	12'-1¾"	12'-0⅛"	11'-11¼"	11'-5¾"	11'-4⅝"
West Center Wall	11'-11⅜"	12'-1"	11'-11⅞"	11'-11¼"	11'-6⅛"	11'-5⅛"
East Center Wall	11'-10⅝"	12'-0⅜"	11'-11⅜"	11'-11¼"	11'-6¾"	11'-5½"
East Wall	11'-9⅞"	11'-11⅞"	11'-11⅞"	11'-11¼"	11'-7¼"	11'-6"

* Work these dimensions with Top of Slab Elevations on sheet #4.

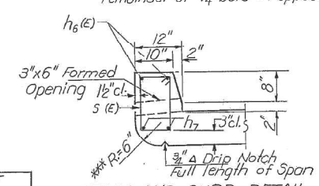

DRAIN AND CURB DETAIL
***6" Radius at Upstream End Only. At Downstream End form at Rt. Angle.

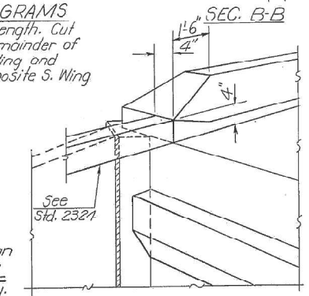

DETAIL "A"

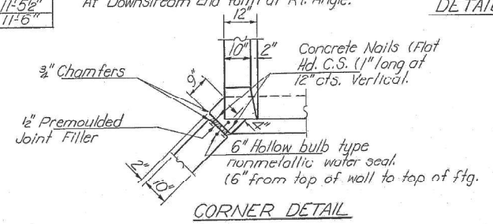

CORNER DETAIL

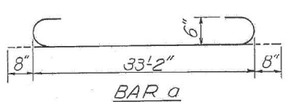

BAR a

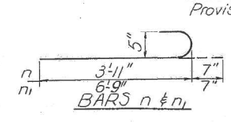

BARS n & n1

BILL OF MATERIAL

Bar	No.	Size	Length	Shape
a	164	#6	34'-6"	
a1(E)	55	#6	33'-3"	
a3	58	#6	33'-3"	
d	94	#4	5'-6"	
h(E)	33	#4	15'-1"	
h1	129	#4	16'-0"	
h2(E)	33	#4	23'-5"	
h3	129	#4	23'-5"	
h4	76	#5	16'-6"	
h5	76	#5	22'-6"	
h6(E)	4	#6	30'-3"	
h7	10	#6	33'-3"	
h8	78	#4	13'-11"	
n	64	#5	4'-6"	
n1	8	#5	7'-4"	
s(E)	66	#4	4'-3"	
s1	74	#4	3'-5"	
t	116	#4	7'-9"	
v	292	#4	9'-9"	
v1	284	#4	3'-9"	
v2	74	#5	2'-0"	
v3	21	#4	20'-2"	
v4	21	#4	19'-4"	
w	64	#5	13'-11"	
Class X Concrete Box Culverts			Cu. Yd.	192.5
Reinforcement Bars			Pound	24830
Reinforcement Bars (Epoxy Coated)			Pound	3960
Creosoted Piles 20.1 to 38 Feet			Lin. Ft.	759
Test Pile Timber			Each	1

Reinforcement bars designated (E) shall be epoxy coated. See Special Provisions.

CULVERT DETAILS
F.A.P. RT. 713 SEC. 120B-1
SCHUYLER COUNTY
STA. 586+06.00

DESIGNED M. Bloxdorf	EXAMINED James T. Rawlison (ENGINEER OF BRIDGE DESIGN)	June 21 1983
CHECKED Rick Brunette	PASSED Carl Ellmann Jr. (ENGINEER OF BRIDGES AND STRUCTURES)	
DRAWN R. Doty	APPROVED	(DIRECTOR OF HIGHWAYS)
CHECKED GR		

MODEL: bridge-11 [Sheet]
FILE NAME: c:\pw_work\pwidot\castrosoto\d1106099\085-2013 plans.dgn

USER NAME = Veronica.CastroSoto	DESIGNED -	REVISED -
	DRAWN -	REVISED -
	CHECKED -	REVISED -
PLOT DATE = 12/5/2025	DATE -	REVISED -

STATE OF ILLINOIS
DEPARTMENT OF TRANSPORTATION

EXISTING CULVERT PLANS, SN 085-2013
(FOR INFORMATION ONLY)

SCALE: | SHEET 12 OF 16 SHEETS | STA. | TO STA.

F.A.P RTE.	SECTION	COUNTY	TOTAL SHEETS	SHEET NO.
713	119RS-4, 120RS-5,CLV	SCHUYLER	56	47

CONTRACT NO. 72762
ILLINOIS | FED. AID PROJECT

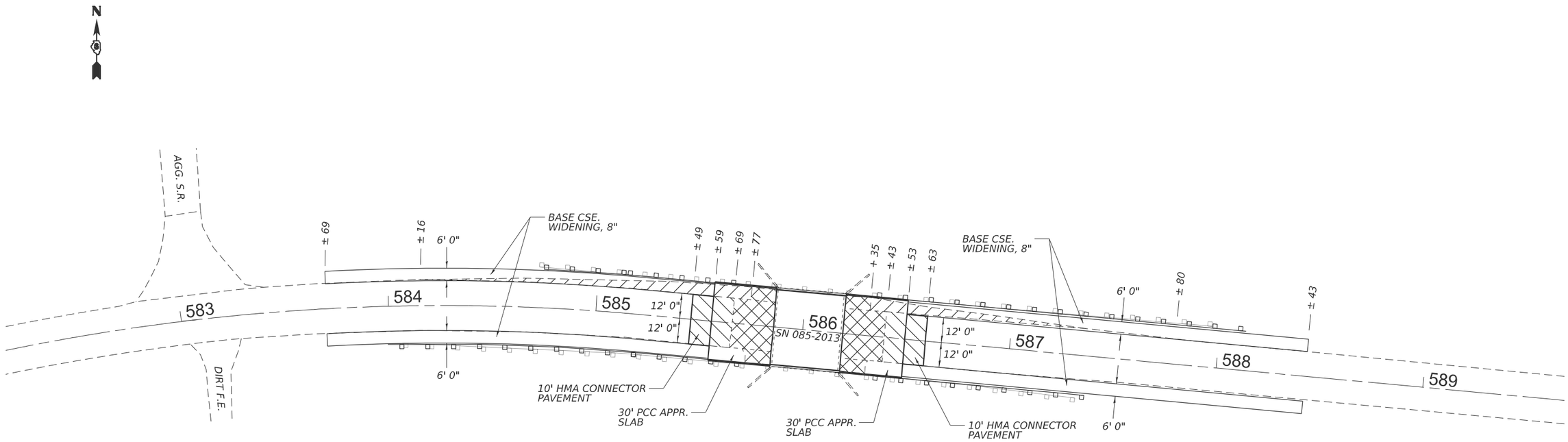

ROADWAY PLAN

PAVED SHOULDER REMOVAL

PAVEMENT REMOVAL

APPROACH SLAB REMOVAL

NOTE: TOP LIFT OF HMA PAVEMENT CONNECTOR TO BE PLACED WITH ADJACENT HMA SURFACE COURSE.

MODEL: roadway plan at culvert [Sheet]
FILE NAME: c:\pw_work\pwidot\castrosotov\d1106099\085-2013 plans.dgn

USER NAME = Veronica.CastroSoto	DESIGNED -	REVISED -	
	DRAWN -	REVISED -	
	CHECKED -	REVISED -	
PLOT DATE = 12/5/2025	DATE -	REVISED -	

STATE OF ILLINOIS
DEPARTMENT OF TRANSPORTATION

ROADWAY PLAN
AT SN 085-2013

SCALE: | SHEET 13 OF 16 SHEETS | STA. | TO STA.

F.A.P RTE.	SECTION	COUNTY	TOTAL SHEETS	SHEET NO.
713	119RS-4, 120RS-5,CLV	SCHUYLER	56	48

CONTRACT NO. 72762

ILLINOIS | FED. AID PROJECT

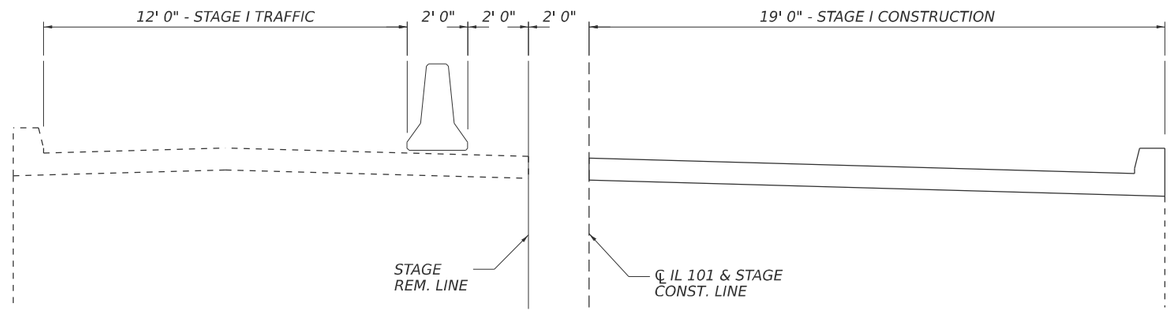

STAGE I TRAFFIC - LOOKING EAST

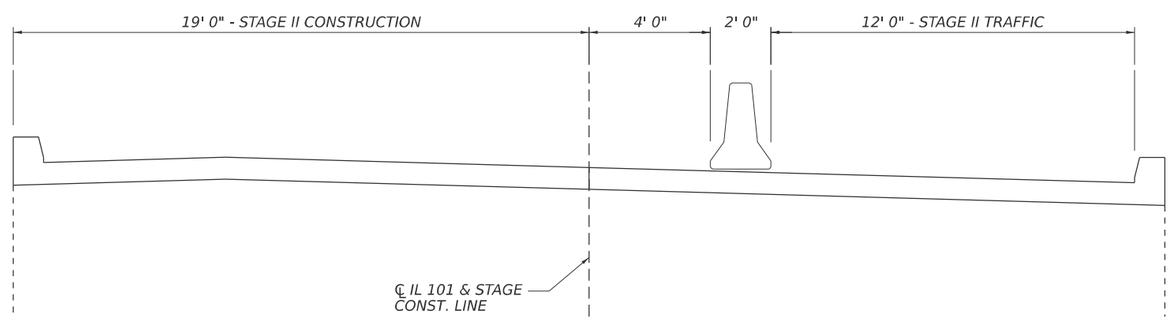

STAGE II TRAFFIC - LOOKING EAST

MODEL: TC [Sheet]
FILE NAME: c:\pw_work\pwidot\castrosotov\d1106099\085-2013 plans.dgn

USER NAME = Veronica.CastroSoto	DESIGNED -	REVISED -	
	DRAWN -	REVISED -	
	CHECKED -	REVISED -	
PLOT DATE = 12/5/2025	DATE -	REVISED -	

STATE OF ILLINOIS
DEPARTMENT OF TRANSPORTATION

TRAFFIC STAGING DETAIL
SN 085-2018

SCALE: | SHEET 14 OF 16 SHEETS | STA. | TO STA.

F.A.P RTE.	SECTION	COUNTY	TOTAL SHEETS	SHEET NO.
713	119RS-4, 120RS-5,CLV	SCHUYLER	56	49

CONTRACT NO. 72762

ILLINOIS | FED. AID PROJECT

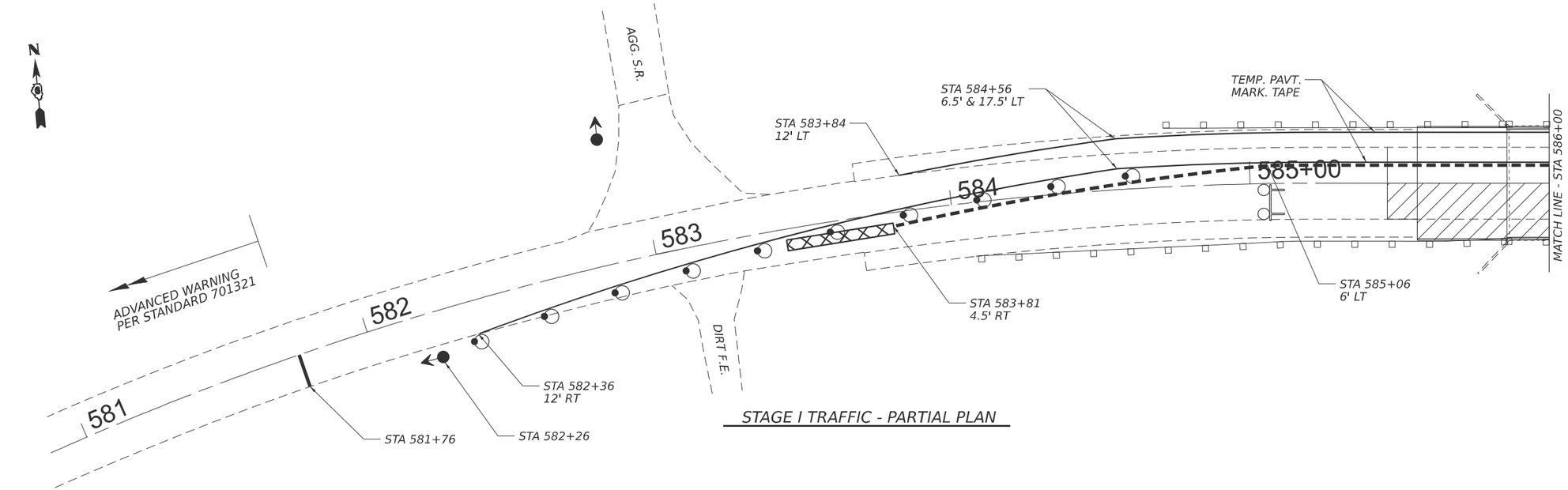

STAGE I TRAFFIC - PARTIAL PLAN

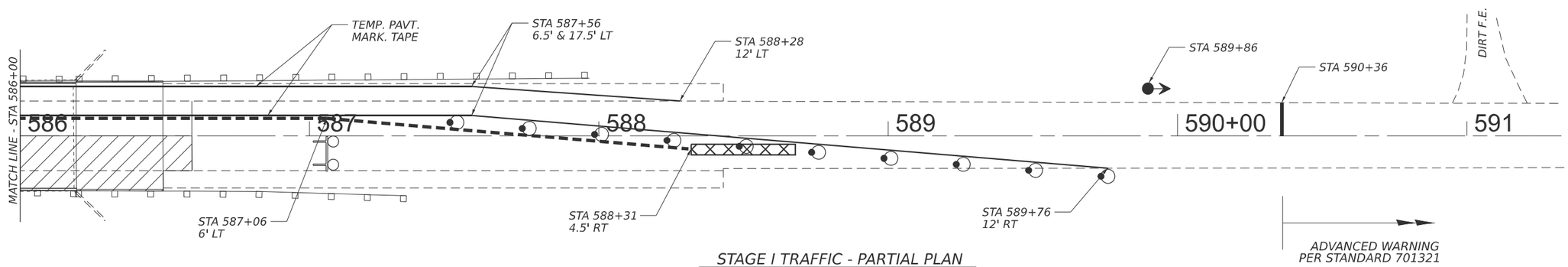

STAGE I TRAFFIC - PARTIAL PLAN

SYMBOLS

- WORK AREA
- DRUM WITH STEADY BURN BI-DIRECTIONAL LIGHT
- TRAFFIC SIGNAL
- TYPE III BARRICADE WITH FLASHING LIGHTS
- TEMPORARY CONCRETE BARRIER
- IMPACT ATTENUATOR

TRAFFIC CONTROL NOTES:

1. Traffic control devices not shown in this detail shall be per standard 701321. Devices and temporary pavement markings shown in this detail shall be included in the cost of TRAFFIC CONTROL AND PROTECTION, STANDARD 701321. Impact attenuators temporary rumble strips, temporary concrete barrier, and temporary traffic signals shall be paid separtely.

2. Temporary concrete barrier offsets given in this detail refer to the edge of the barrier nearest to live traffic.

3. A third traffic signal shall be provided for the sideroad at STA 583±05, cost included with TEMPORARY BRIDGE TRAFFIC SIGNALS.

MODEL: TC-1 [Sheet]
FILE NAME: c:\pw_work\pwidot\castrosoto\d1106099\085-2013_plans.dgn

USER NAME = Veronica.CastroSoto	DESIGNED -	REVISED -	
	DRAWN -	REVISED -	
	CHECKED -	REVISED -	
PLOT DATE = 12/5/2025	DATE -	REVISED -	

STATE OF ILLINOIS
DEPARTMENT OF TRANSPORTATION

STAGE I TRAFFIC CONTROL PLAN
SN 085-2018

SCALE: | SHEET 15 OF 16 SHEETS | STA. | TO STA.

F.A.P RTE.	SECTION	COUNTY	TOTAL SHEETS	SHEET NO.
713	119RS-4, 120RS-5,CLV	SCHUYLER	56	50

CONTRACT NO. 72762

ILLINOIS | FED. AID PROJECT

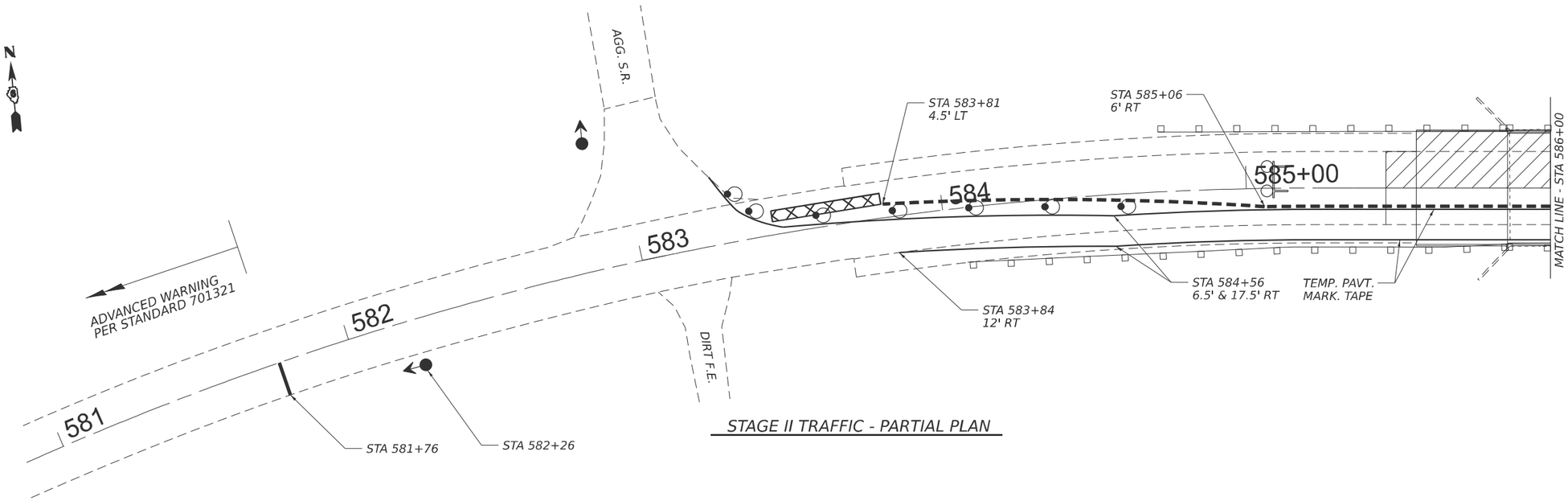

STAGE II TRAFFIC - PARTIAL PLAN

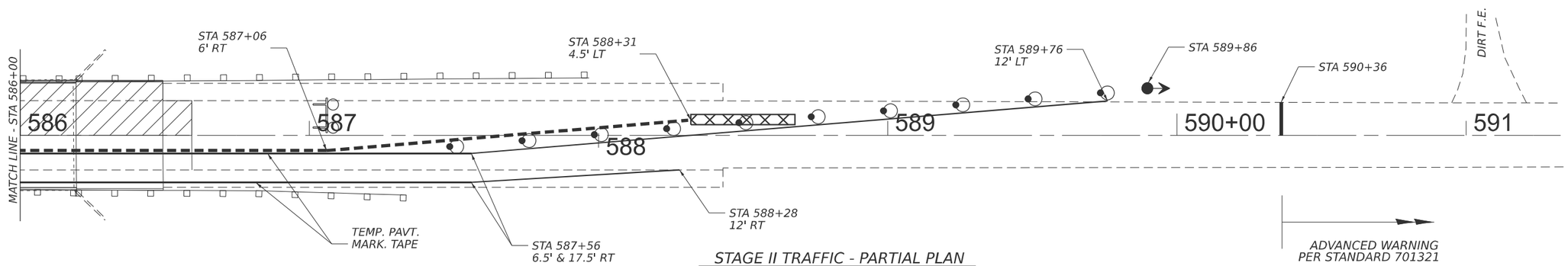

STAGE II TRAFFIC - PARTIAL PLAN

SYMBOLS

- WORK AREA
- DRUM WITH STEADY BURN BI-DIRECTIONAL LIGHT
- TRAFFIC SIGNAL
- TYPE III BARRICADE WITH FLASHING LIGHTS
- TEMPORARY CONCRETE BARRIER
- IMPACT ATTENUATOR

TRAFFIC CONTROL NOTES:

1. Traffic control devices not shown in this detail shall be per standard 701321. Devices and temporary pavement markings shown in this detail shall be included in the cost of TRAFFIC CONTROL AND PROTECTION, STANDARD 701321. Impact attenuators temporary rumble strips, temporary concrete barrier, and temporary traffic signals shall be paid separtely.

2. Temporary concrete barrier offsets given in this detail refer to the edge of the barrier nearest to live traffic.

3. A third traffic signal shall be provided for the sideroad at STA 583±05, cost included with TEMPORARY BRIDGE TRAFFIC SIGNALS.

MODEL: TC-2 [Sheet]
FILE NAME: c:\pw_work\pwidot\castrosoto\d1106099\085-2013 plans.dgn

USER NAME = Veronica.CastroSoto	DESIGNED -	REVISED -	
	DRAWN -	REVISED -	
	CHECKED -	REVISED -	
PLOT DATE = 12/5/2025	DATE -	REVISED -	

STATE OF ILLINOIS
DEPARTMENT OF TRANSPORTATION

STAGE II TRAFFIC CONTROL PLAN
SN 085-2018

SCALE: | SHEET 16 OF 16 SHEETS | STA. | TO STA.

F.A.P RTE.	SECTION	COUNTY	TOTAL SHEETS	SHEET NO.
713	119RS-4, 120RS-5,CLV	SCHUYLER	56	51

CONTRACT NO. 72762

ILLINOIS | FED. AID PROJECT

NOTE:

1. GRINDING OF EXISTING CONCRETE GUTTER THAT IS HIGHER THEN PROPOSED HMA OVERLAY TOP GRADE.

2 ALL LOCATIONS SHALL BE DETERMINED IN THE FIELD BY THE ENGINEER.

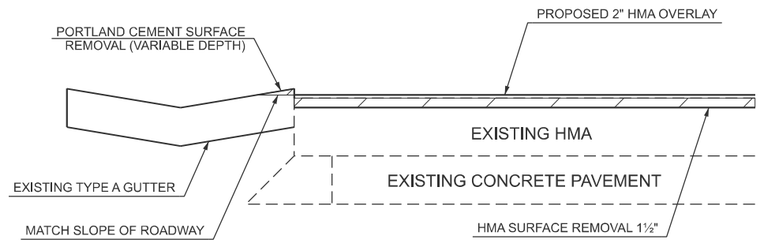

PORTLAND CEMENT CONCRETE SURFCE REMOVAL (VARIABLE DEPTH) DETAIL

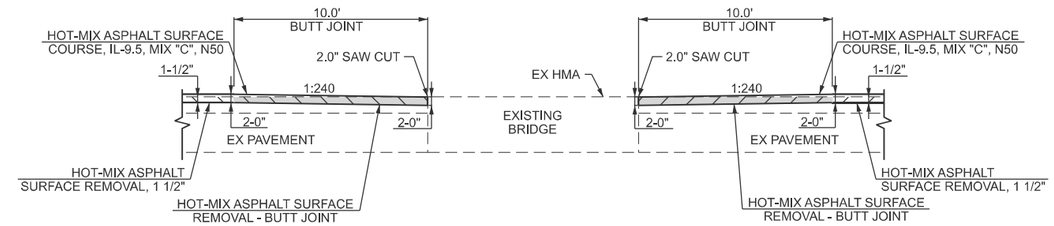

RESURFACING DETAIL AT EXISTING BRIDGES

EXISTING BRIDGE: STATION 141+95.12 TO STATION 144+04.67
EXISTING BRIDGE: STATION 556+43.31 TO STATION 562+31.71
EXISTING BRIDGE: STATION 643+93.62 TO STATION 644+56.43

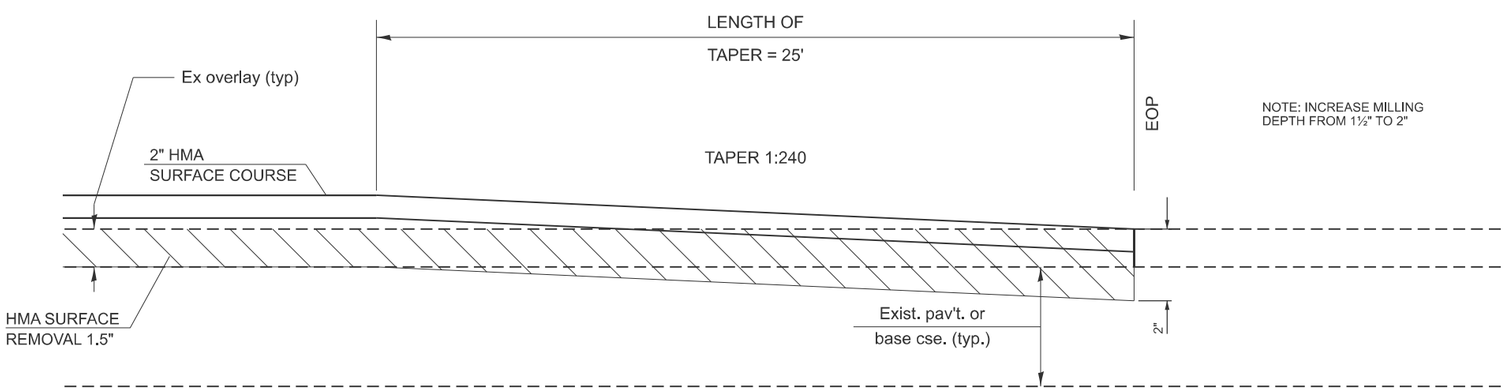

BUTT JOINT DETAIL

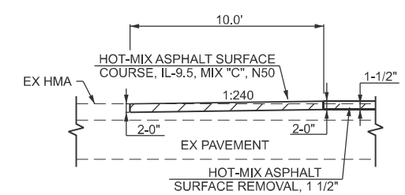

RESURFACING TRANSITION DETAIL

MODEL: Project Detail [Sheet]
FILE NAME: c:\pw_work\pwidot\whitlingmed\d1106097\D6-sht-09-Miscellaneous Details.dgn

USER NAME = michael.whitling	DESIGNED -	REVISED -	STATE OF ILLINOIS DEPARTMENT OF TRANSPORTATION
	DRAWN -	REVISED -	
	CHECKED -	REVISED -	
PLOT DATE = 1/23/2026	DATE -	REVISED -	

MISCELLANEOUS DETAILS

SCALE: | SHEET A001 1 SHEETS | STA. TO STA.

F.A.P RTE.	SECTION	COUNTY	TOTAL SHEETS	SHEET NO.
713	119RS-4, 120RS-5,CLV	SCHUYLER	57	52

CONTRACT NO. 72762

ILLINOIS | FED. AID PROJECT

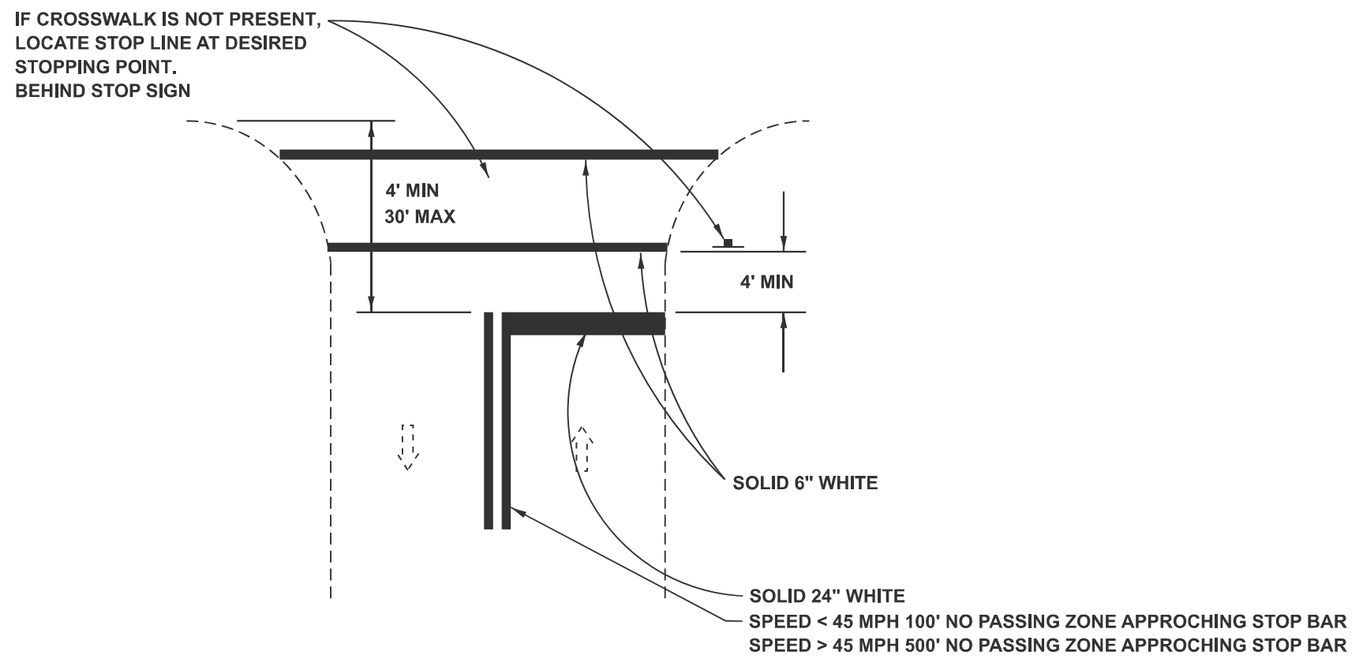

RURAL

MODEL: D6 Details [Sheet]
FILE NAME: c:\pw_work\pwidot\castrosoto\d1106097\72762-sht-10-D6 Details.dgn

USER NAME = Veronica.CastroSoto	DESIGNED -	REVISED -	STATE OF ILLINOIS DEPARTMENT OF TRANSPORTATION
	DRAWN -	REVISED -	
	CHECKED -	REVISED -	
PLOT DATE = 12/5/2025	DATE -	REVISED -	

PAVEMENT MARKING STANDARDS
STOP LINES

SCALE: | SHEET 1 OF 4 SHEETS | STA. | TO STA.

F.A.P RTE.	SECTION	COUNTY	TOTAL SHEETS	SHEET NO.
713	119RS-4, 120RS-5,CLV	SCHUYLER	56	53

CONTRACT NO. 72762

ILLINOIS | FED. AID PROJECT

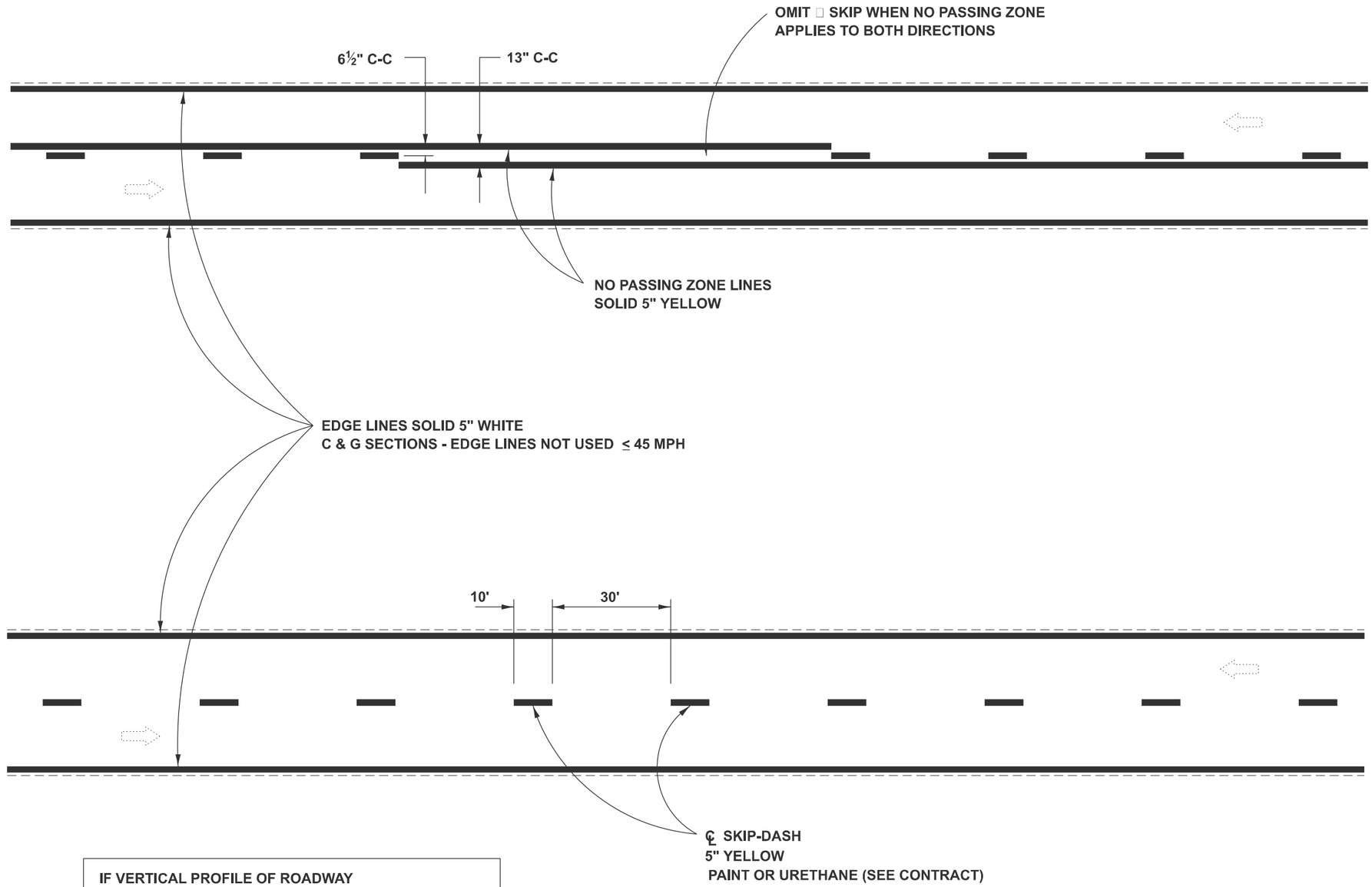

IF VERTICAL PROFILE OF ROADWAY
IS CHANGED DURING CONSTRUCTION,
"NO PASSING ZONES" ARE TO BE FIELD
VERIFIED BY THE RESIDENT ENGINEER
THE RESIDENT ENGINEER SHALL NOTIFY
THE BUREAU OF OPERATIONS WITH ANY CONCERNS
14 DAYS PRIOR TO PERMANENT PAVEMENT MARKINGS.

MODEL: D6 Details-2 [Sheet]
FILE NAME: c:\pw_work\pwidot\castrosoto\d1106097\72762-sht-10-D6 Details.dgn

USER NAME = Veronica.CastroSoto	DESIGNED -	REVISED -	
	DRAWN -	REVISED -	
	CHECKED -	REVISED -	
PLOT DATE = 12/5/2025	DATE -	REVISED -	

STATE OF ILLINOIS
DEPARTMENT OF TRANSPORTATION

PAVEMENT MARKING STANDARDS
2 LANE PAVEMENT

SCALE: | SHEET 2 OF 4 SHEETS | STA. | TO STA.

F.A.P RTE.	SECTION	COUNTY	TOTAL SHEETS	SHEET NO.
713	119RS-4, 120RS-5,CLV	SCHUYLER	56	54
		CONTRACT NO. 72762		
		ILLINOIS	FED. AID PROJECT	

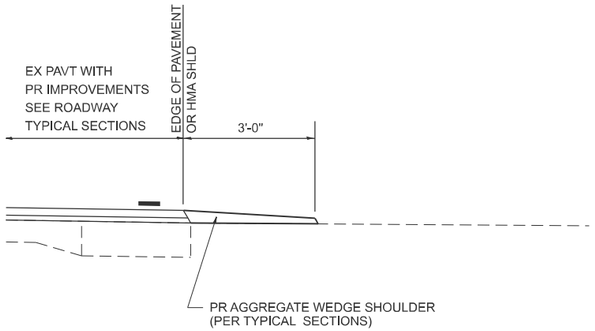

SECTION A-A FOR EX EARTH/ AGGREGATE FE

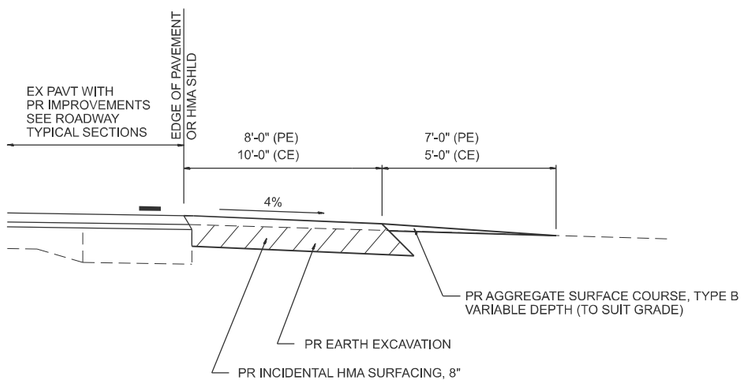

SECTION A-A FOR EX EARTH/AGGREGATE PE, CE, & SIDE ROAD

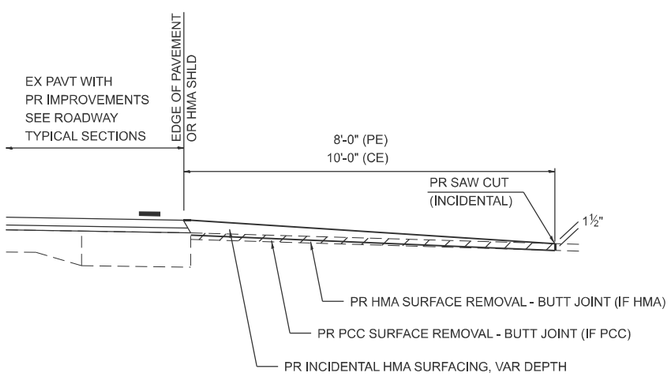

SECTION A-A FOR EX BITUMINOUS/ PC CONCRETE PE, CE & SIDE ROAD

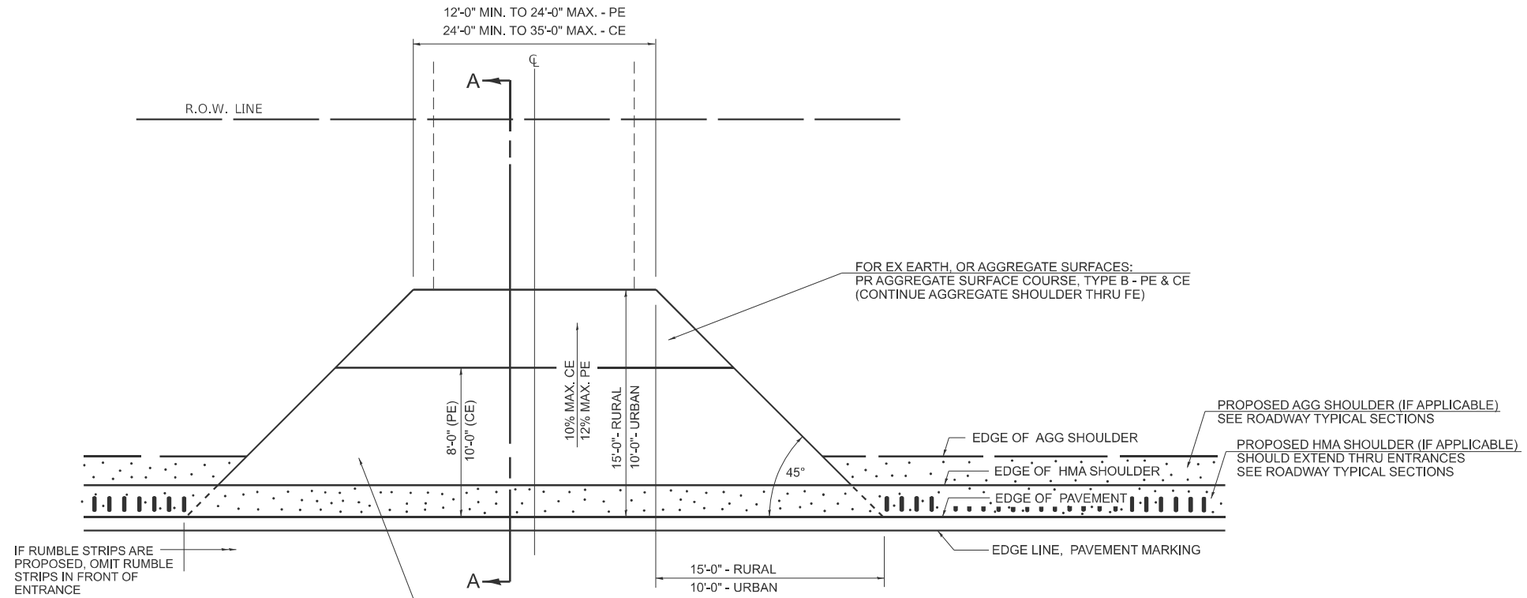

FOR EX EARTH OR AGGREGATE SURFACES:
PR AGGREGATE SHOULDER THRU FE
PR INCIDENTAL HMA SURFACING, 8" (PE & CE)

FOR EX HMA CONCRETE SURFACES:
PR HMA SURFACE REMOVAL - BUTT JOINT

FOR EX PCC SURFACES:
PR PCC SURFACE REMOVAL - BUTT JOINT

FOR ENTRANCE LAYOUT DIMENSIONS
AND SECTION A-A, REFER TO THE
SCHEDULES IN THE PLANS

PLAN - ENTRANCE

GENERAL NOTES:

THE RESIDENT ENGINEER WILL DETERMINE THE EXACT TYPE OF IMPROVEMENT TO BE COMPLETED FOR ALL ENTRANCES, SIDEROADS, AND MAILBOX TURNOUTS ON THIS PROJECT.

THE PLAN DETAILS AND SCHEDULES SHOULD BE USED AS A GUIDE FOR THE ENGINEER TO IMPLEMENT THE FINAL DESIGN. THE ENGINEER MAY DECIDE TO SALVAGE PORTIONS OF THE EXISTING ENTRANCE PAVEMENT STRUCTURE, THEREBY REDUCING PAY ITEM QUANTITIES. NO ADDITIONAL PAYMENT WILL BE ALLOWED FOR THIS REDUCTION IN QUANTITIES.

ANY WORK THE ENGINEER REQUIRES WHICH IS NOT COVERED BY A PAY ITEM CONTAINED IN THE PLANS WILL BE PAID FOR ACCORDING TO ARTICLE 109.04 OF THE STANDARD SPECIFICATIONS.

INCIDENTAL HMA SURFACING REQUIRED TO CONSTRUCT THE ENTRANCES SHALL BE PLACED ACCORDING TO THE APPLICABLE PORTIONS OF SECTION 406 AND 408 OF THE STANDARD SPECIFICATIONS AND AS DIRECTED BY THE ENGINEER.

WHEN THE INCIDENTAL HMA SURFACING PROPOSED FOR THE IMPROVEMENT IS THICKER THAN 3 INCHES,THE CONTRACTOR WILL BE REQUIRED TO PLACE MORE THAN ONE LIFT. THE BOTTOM LIFT(S) SHALL MEET THE REQUIREMENTS OF HMA BASE COURSE IN SECTION 406 OF THE STANDARD SPECIFICATIONS AND THE TOP LIFT OF 1 1/2" INCHES SHALL MEET THE REQUIREMENTS OF HMA INCIDENTAL SURFACING.

THIS WORK WILL BE PAID FOR ACCORDING TO SECTIONS 351, 358, 408, 423 AND 440 OF THE STANDARD SPECIFICATIONS.

SHEET 1 OF 3
UPDATED 7/30/2025

MODEL: D6 Details-3 [Sheet]
FILE NAME: c:\pw_work\pwidot\castrosotov\d1106097\72762-sht-10-D6 Details.dgn

USER NAME = Veronica.CastroSoto	DESIGNED -	REVISED -	
	DRAWN -	REVISED -	
	CHECKED -	REVISED -	
PLOT DATE = 12/5/2025	DATE -	REVISED -	

STATE OF ILLINOIS
DEPARTMENT OF TRANSPORTATION

DIST. 6 DETAILS FOR RURAL/URBAN ENT., MAILBOX TURNOUT & SIDEROADS W/O CONC. GUTTER (3P-PROJ.)

SCALE: | SHEET 3 OF 4 SHEETS | STA. | TO STA.

F.A.P RTE.	SECTION	COUNTY	TOTAL SHEETS	SHEET NO.
713	119RS-4, 120RS-5,CLV	SCHUYLER	56	55
		CONTRACT NO. 72762		
		ILLINOIS FED. AID PROJECT		

DETAILS OF MAILBOX TURNOUTS

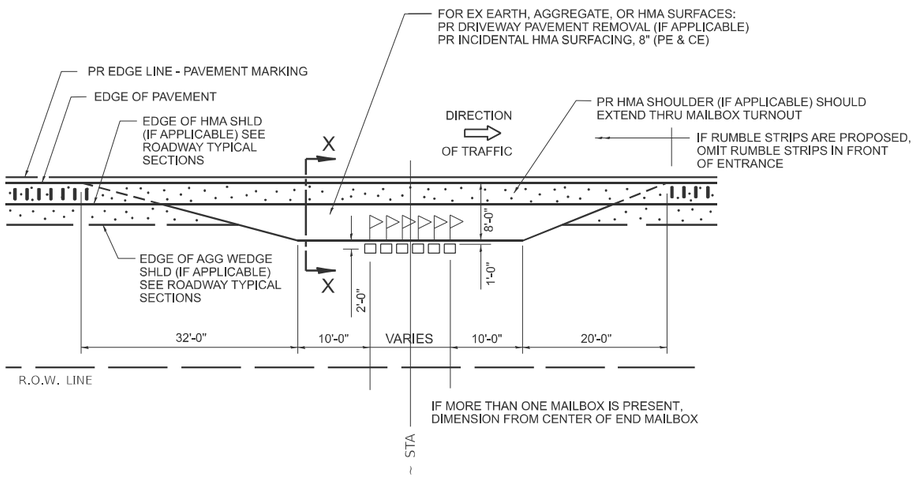

PLAN - MAILBOX TURNOUTS

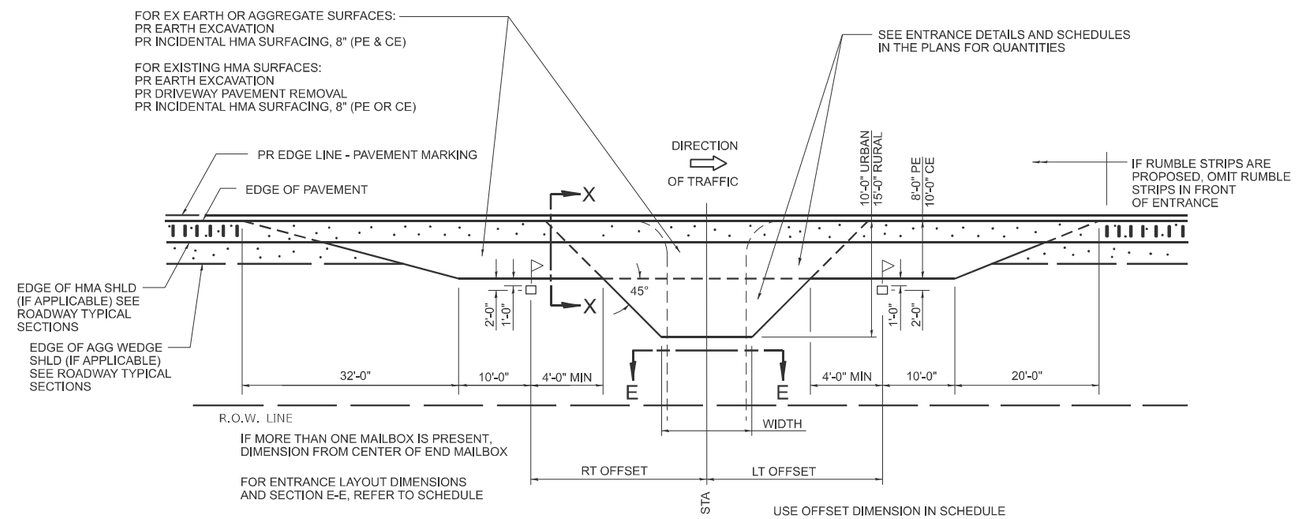

PLAN - MAILBOX TURNOUTS
PLAN - COMBINED MAILBOX TURNOUT WITH TRAILING OR LEADING ENTRANCE

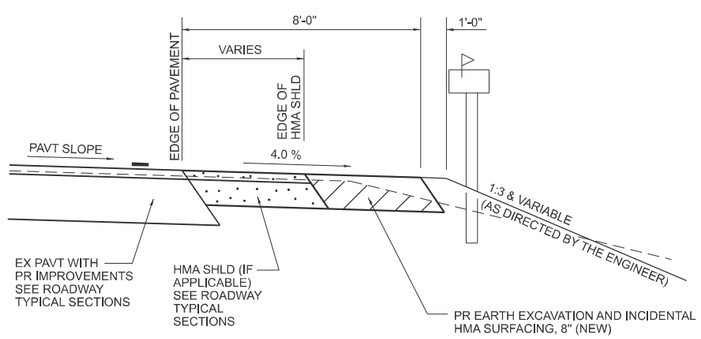

SECTION X-X THRU MAILBOX TURNOUT
APPLIES TO MAILBOX TURNOUTS COMBINED WITH
EX EARTH OR AGGREGATE PE & FE

(DETAIL APPLIES WHEN MAILBOX TURNOUT DOES NOT EXIST.
IF EXISTING, TREAT SAME AS ENTRANCE)

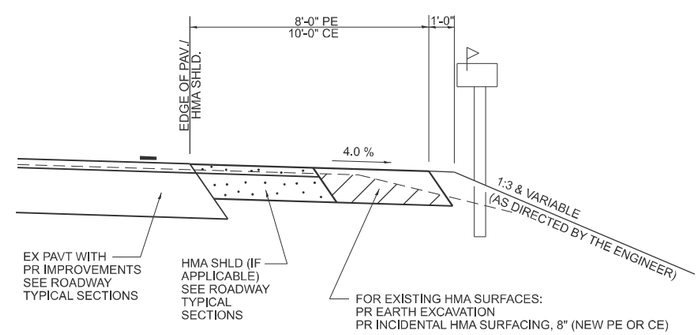

SECTION X-X THRU MAILBOX TURNOUT
APPLIES TO MAILBOX TURNOUTS COMBINED WITH
EX HMA PE & CE WITH NEW HMA SHLD

(DETAIL APPLIES WHEN MAILBOX TURNOUT DOES NOT EXIST.
IF EXISTING, TREAT SAME AS ENTRANCE)

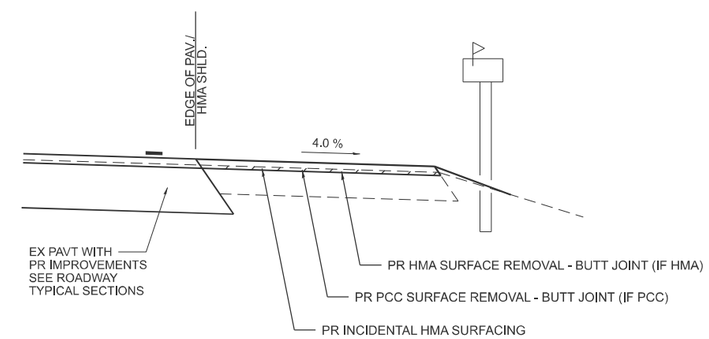

SECTION X-X THRU MAILBOX TURNOUT
APPLIES TO MAILBOX TURNOUTS COMBINED WITH
EX HMA & PCC PE & CE W/O NEW HMA SHLD

NOTE: IF THERE IS A NEW HMA SHOULDER PROPOSED, THEN THE ENTIRE EXISTING MB TURNOUT WILL BE REPLACED. IF THERE IS NO PROPOSED NEW HMA SHOULDER, THE EXISTING MB TURNOUT WILL BE MILLED AND RESURFACED.

SHEET 2 OF 3
UPDATED 7/30/2025

MODEL: D6 Details-4 [Sheet]
FILE NAME: c:\pw_work\pwidot\castrosoto\d1106097\72762-sht-10-D6 Details.dgn

USER NAME = Veronica.CastroSoto	DESIGNED -	REVISED -	
	DRAWN -	REVISED -	
	CHECKED -	REVISED -	
PLOT DATE = 12/5/2025	DATE -	REVISED -	

STATE OF ILLINOIS
DEPARTMENT OF TRANSPORTATION

DIST. 6 DETAILS FOR RURAL/URBAN ENT., MAILBOX TURNOUT & SIDEROADS W/O CONC. GUTTER (3P-PROJ.)

SCALE: | SHEET 4 OF 4 SHEETS | STA. TO STA.

F.A.P RTE.	SECTION	COUNTY	TOTAL SHEETS	SHEET NO.
713	119RS-4, 120RS-5,CLV	SCHUYLER	56	56
		CONTRACT NO. 72762		
		ILLINOIS	FED. AID PROJECT	