02-27-2026 LETTING ITEM 052

F.A.I. RTE.	SECTION	COUNTY	TOTAL SHEETS	SHEET NO
72	(58-63 HVB) BR	MACON	122	1
	ILLINOIS	CONTRACT NO. 74705		

STATE OF ILLINOIS
DEPARTMENT OF TRANSPORTATION

INDEX OF SHEETS

1	COVER SHEET
2	HIGHWAY STANDARDS, GENERAL NOTES, & COMMITMENTS
3 - 7	SUMMARY OF QUANTITIES
8 - 9	TYPICAL SECTIONS
10 - 15	ALIGNMENT, TIES, AND BENCHMARKS
16 - 24	SCHEDULE OF QUANTITIES
25 - 29	PLAN AND PROFILE
30	DRAINAGE PLAN
31 - 36	STAGING PLAN
37 - 39	DETOUR PLAN
40	EROSION CONTROL PLAN
41 - 110	STRUCTURE PLANS
111 - 116	DISTRICT 7 STANDARDS
117 - 122	CROSS SECTIONS

FOR HIGHWAY STANDARDS, SEE SHEET NO. 2

PROPOSED HIGHWAY PLANS

FAI ROUTE 72 (I-72)
SECTION (58-63 HVB) BR
PROJECT BR-JE7J(144)
BRIDGE REPLACEMENT
MACON COUNTY

C-97-013-15

D-97-010-15

LOCATION OF SECTION INDICATED THUS: -

EB BRIDGE REPLACEMENT
STA. 724+53.17
EX SN 058-0074
PR SN 058-0139

WB BRIDGE REPLACEMENT
STA. 724+38.00
EX SN 058-0075
PR SN 058-0140

BEGIN IMPROVEMENT
STA. 720+75.00

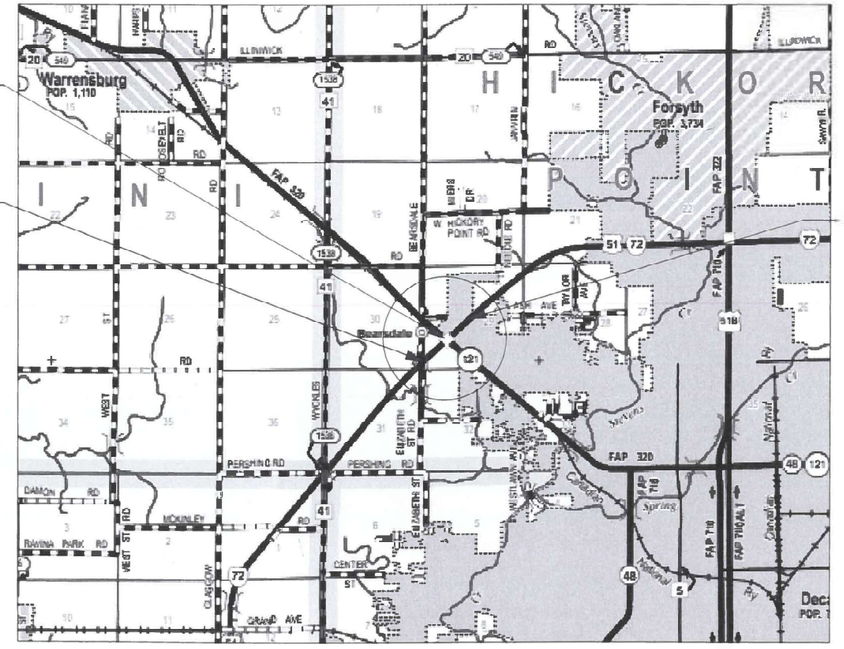

CITY OF DECATUR

N

LOCATION MAP
NOT TO SCALE

END IMPROVEMENT
STA. 728+25.00

FUNCTIONAL CLASSIFICATION
INTERSTATE
2024 ADT EB = 7200
2024 ADT WB = 7100
EB P.V. = 75.0% **EB TRUCKS = 25.0%**
WB P.V. = 77.1% **WB TRUCKS = 22.9%**

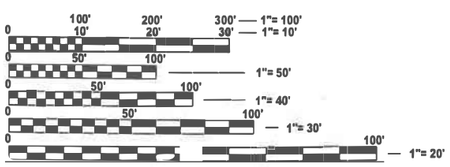

FULL SIZE PLANS HAVE BEEN PREPARED USING ENGINEERING SCALES. REDUCED SIZED PLANS WILL NOT CONFORM TO STANDARD SCALES. IN MAKING MEASUREMENTS ON REDUCED PLANS, THE ABOVE SCALES MAY BE USED.

J.U.L.I.E.
JOINT UTILITY LOCATION INFORMATION FOR EXCAVATION
1-800-892-0123
OR 811

PROJECT ENGINEER: MATTHEW BOWER
PROJECT MANAGER: MATTHEW BOWER

CONTRACT NO. 74705

CDI
CIVIL DESIGN, INC.
WBE / DBE
LICENSE #184.003222

GROSS LENGTH = 750.00 FT. = 0.142 MILE
NET LENGTH = 750.00 FT. = 0.142 MILE

STATE OF ILLINOIS
ROBERT HANFLAND
NUMBER 062.064104
PROFESSIONAL ENGINEER
8/21/2025
LICENSE:062.064104
EXP 11/30/2025

STATE OF ILLINOIS
DEPARTMENT OF TRANSPORTATION

SUBMITTED August 28 20 25
Teresa C Priceley
REGIONAL ENGINEER

December 5 20 25
ENGINEER OF DESIGN AND ENVIRONMENT

December 5 20 25
DIRECTOR OF HIGHWAYS PROJECT IMPLEMENTATION

PRINTED BY THE AUTHORITY OF THE STATE OF ILLINOIS

REV - MS

HIGHWAY STANDARDS

000001-09	STANDARD SYMBOLS, ABBREVIATIONS AND PATTERNS
001001-02	AREAS OF REINFORCEMENT BARS
001006	DECIMAL OF AN INCH AND OF A FOOT
280001-07	TEMPORARY EROSION CONTROL SYSTEMS
420401-13	PAVEMENT CONNECTOR (PCC) FOR BRIDGE APPROACH SLAB
442201-04	CLASS C AND D PATCHES
515001-04	NAME PLATE FOR BRIDGES
542301-03	PRECAST REINFORCED CONCRETE FLARED END SECTION
630001-13	STEEL PLATE BEAM GUARDRAIL
630201-07	PCC/HMA STABILIZATION AT STEEL PLATE BEAM GUARDRAIL
630301-09	SHOULDER WIDENING FOR TYPE 1 (SPECIAL) GUARDRAIL TERMNALS
631011-10	TRAFFIC BARRIER TERMINAL, TYPE 2
631031-18	TRAFFIC BARRIER TERMINAL, TYPE 6
642001-03	SHOULDER RUMBLE STRIPS, 16 IN.
643001-03	SAND MODULE IMPACT ATTENUATORS
701101-05	OFF-RD OPERATIONS, MULTILANE, 15' TO 24" FROM PAVEMENT EDGE
701106-02	OFF-RD OPERATIONS, MULTILANE, MORE THAN 15' AWAY
701400-12	APPROACH TO LANE CLOSURE, FREEWAY/EXPRESSWAY
701401-13	LANE CLOSURE, FREEWAY/EXPRESSWAY
701402-12	LANE CLOSURE, FREEWAY/EXPRESSWAY, WITH BARRIER
701411-09	LANE CLOSURE, MULTILANE, AT ENTRANCE OR EXIT RAMP, FOR SPEEDS ≥ 45 MPH
701421-08	LANE CLOSURE, MULTILANE, DAY OPERATIONS ONLY, FOR SPEEDS ≥ 45 MPH TO 55 MPH
701422-10	LANE CLOSURE, MULTILANE, FOR SPEEDS ≥ 45 MPH TO 55 MPH
701426-09	LANE CLOSURE, MULTILANE, INTERMITTENT OR MOVING OPERATION, FOR SPEEDS ≥ 45 MPH
701428-01	TRAFFIC CONTROL SETUP AND REMOVAL FREEWAY/EXPRESSWAY
701451-05	RAMP CLOSURE FREEWAY/EXPRESSWAY
701901-11	TRAFFIC CONTROL DEVICES
704001-08	TEMPORARY CONCRETE BARRIERS
725001-01	OBJECT AND TERMINAL MARKERS
780001-05	TYPICAL PAVEMENT MARKINGS
781001-04	TYPICAL APPLICATIONS RAISED REFLECTIVE PAVEMENT MARKERS
782006-01	GUARDRAIL AND BARRIER WALL REFLECTOR MOUNTING DETAILS

GENERAL NOTES

THIS PROJECT IS LOCATED ON FAI ROUTE 72 (I-72) OVER FAP ROUTE 320 (IL-121) AND CN / IC RAILROAD IN MACON COUNTY. THE WORK CONSISTS OF REMOVING EXISTING STRUCTURES 058-0074 & 058-0075 AND REPLACING WITH STRUCTURES 058-0139 & 058-0140. UTILIZING STAGE CONSTRUCTION, ADDITIONAL WORK INCLUDES HOT-MIX ASPHALT RESURFACING FOR THE BRIDGE APPROACHES, SHOULDER WIDENING, EARTHWORK, PAVEMENT MARKINGS, SEEDING, NEW GUARDRAIL, AND ALL OTHER WORK NECESSARY TO COMPLETE THE BRIDGE REPLACEMENT.

WHEN APPLYING SHORT TERM PAVEMENT MARKINGS, TEMPORARY TAPE SHALL BE USED ON THE SURFACE AND PAINT SHALL BE USED ON THE MILLED SURFACE.

TEMPORARY CONCRETE BARRIER WILL NOT BE ALLOWED ON THE PAVEMENT BETWEEN DECEMBER 1ST AND MARCH 1ST.

THE CONTRACTOR IS RESPONSIBLE FOR REMOVAL, STORAGE, AND RE-INSTALLATION OF SIGNAGE WITHIN THE PROJECT LIMITS. THE CONTRACTOR IS RESPONSIBLE FOR REPLACING THOSE SIGNS THAT ARE DAMAGED AS A RESULT OF THIS CONTRACT AT NO ADDITIONAL COST. THE REMOVAL AND RE-INSTALLATION OF THESE ITEMS SHALL BE PERFORMED AT NO ADDITIONAL COST TO THE CONTRACT.

ALL ELEVATIONS SHOWN IN THE PLANS ARE BASED ON U.S.G.S. DATUM.

THE LOCATIONS AND DEPTHS OF UNDERGROUND UTILITIES SHOWN HAVE BEEN TAKEN FROM INFORMATION FURNISHED BY THE UTILITY OWNERS AND MUST BE CONSIDERED APPROXIMATE. FIELD MARKINGS OF UTILITIES IN CRITICAL AREAS MAY BE OBTAINED BY PROVIDING A MINIMUM OF 96 HOURS ADVANCE NOTICE THROUGH THE J.U.L.I.E. SYSTEM.

THE FOLLOWING MIXTURE REQUIREMENTS ARE APPLICABLE FOR THIS PROJECT:

LOCATION(S)	MIXTURE USE(S)	PG	DESIGN AIR VOIDS	MIXTURE COMPOSITION	FRICTION AGGREGATE	MIXTURE WEIGHT	QUALITY MANAGEMENT PROGRAM	SUBLOT SIZE	MATERIAL TRANSFER DEVICE (REQUIRED?)
MAINLINE / SHOULDER OVERLAY	POLYMERIZED HMA SURFACE COURSE, IL-9.5, MIX "D", N90 (2")	SBS PG 70-22	4.0% @ N=90	IL - 9.5	MIXTURE D	N90	QCQA	3000	N/A
MAINLINE / SHOULDER OVERLAY	POLYMERIZED HMA BINDER COURSE, IL-9.5FG, N90 (VARIABLE DEPTH)	SBS PG 70-22	4.0% @ N=90	IL - 9.5FG	N/A	N90	QCQA	3000	N/A
8" SHOULDERS	POLYMERIZED HMA SURFACE COURSE, IL-9.5, MIX "D", N90 (TOP LIFT)	SBS PG 70-22	4.0% @ N=90	IL - 9.5	MIXTURE D	N90	QCQA	3000	N/A
8" SHOULDERS	POLYMERIZED HMA BINDER COURSE, IL-19.0, N90 (BOTTOM LIFTS)	SBS PG 70-22	4.0% @ N=90	IL - 19.0	N/A	N90	QCQA	3000	N/A

THE FOLLOWING RATES OF APPLICATION HAVE BEEN USED TO CALCULATE PLAN QUANTITIES:

AGGREGATE SHOULDERS	2.05 TONS/CU YD
BITUMINOUS MATERIALS (TACK COAT)	0.05 LBS/SQ FT (ON MILLED SURFACES)
BITUMINOUS MATERIALS (TACK COAT)	0.025 LBS/SQ FT (ON HMA LIFTS)
HOT-MIX ASPHALT	112 LBS/SQ YD/INCH

COMMITMENTS

NONE

REV - MS

MODEL: General Notes-1 [Sheet]
FILE NAME: P:\5XXX\52XX-53XX\5289 - PTB 201-037 D7 VV_HLR\Work Order #3\CADD Data\Sheets\D774705-sht-gennote.dgn

CIVIL DESIGN, INC.
WBE | DBE
EFFINGHAM, IL
LICENSE #184.003222

USER NAME = kulrich	DESIGNED -	REVISED -	STATE OF ILLINOIS DEPARTMENT OF TRANSPORTATION
	DRAWN -	REVISED -	
	CHECKED -	REVISED -	
PLOT DATE = 8/20/2025	DATE -	REVISED -	

HIGHWAY STANDARDS, GENERAL NOTES, AND COMMITMENTS

SCALE: | SHEET 1 OF 1 SHEETS | STA. | TO STA.

F.A.I. RTE.	SECTION	COUNTY	TOTAL SHEETS	SHEET NO.
72	(58-63 HVB) BR	MACON	122	2

CONTRACT NO. 74705

ILLINOIS | FED. AID PROJECT

CODE NO.	ITEM	UNIT	TOTAL QUANTITY	CONSTRUCTION CODE 90% FEDERAL 10% STATE BRIDGE 0010 S.N. 058-0139	CONSTRUCTION CODE 90% FEDERAL 10% STATE BRIDGE 0010 S.N. 058-0140
20200100	EARTH EXCAVATION	CU YD	101	63	38
20800150	TRENCH BACKFILL	CU YD	1573	786	787
28000250	TEMPORARY EROSION CONTROL SEEDING	POUND	117	62	55
28000305	TEMPORARY DITCH CHECKS	FOOT	58	29	29
28000400	PERIMETER EROSION BARRIER	FOOT	2271	1193	1078
28000500	INLET AND PIPE PROTECTION	EACH	2	2	
40600295	POLYMERIZED BITUMINOUS MATERIALS (TACK COAT)	POUND	2964	1790	1174
40600370	LONGITUDINAL JOINT SEALANT	FOOT	1552	771	781
40600982	HOT-MIX ASPHALT SURFACE REMOVAL - BUTT JOINT	SQ YD	72	36	36
40600985	PORTLAND CEMENT CONCRETE SURFACE REMOVAL - BUTT JOINT	SQ YD	23	13	10
40600990	TEMPORARY RAMP	SQ YD	1115	577	538
40603219	POLYMERIZED HOT-MIX ASPHALT BINDER COURSE, IL-9.5FG, N90	TON	373	257	116
40604164	POLYMERIZED HOT-MIX ASPHALT SURFACE COURSE, IL-9.5, MIX "D", N90	TON	429	241	188
42000080	PAVEMENT CONNECTOR (PCC) FOR BRIDGE APPROACH SLAB	SQ YD	551	259	292
	* SPECIALTY ITEM				

CODE NO.	ITEM	UNIT	TOTAL QUANTITY	CONSTRUCTION CODE 90% FEDERAL 10% STATE BRIDGE 0010 S.N. 058-0139	CONSTRUCTION CODE 90% FEDERAL 10% STATE BRIDGE 0010 S.N. 058-0140
44000100	PAVEMENT REMOVAL	SQ YD	5606	2590	3016
44000157	HOT-MIX ASPHALT SURFACE REMOVAL, 2"	SQ YD	3709	2141	1568
48101498	AGGREGATE SHOULDERS, TYPE B 4"	SQ YD	265	143	122
48203029	HOT-MIX ASPHALT SHOULDERS, 8"	SQ YD	433	243	190
48203100	HOT-MIX ASPHALT SHOULDERS	TON	156	112	44
48300615	PORTLAND CEMENT CONCRETE SHOULDERS 11 3/4"	SQ YD	4648	2168	2480
50100300	REMOVAL OF EXISTING STRUCTURES NO. 1	EACH	1	1	
50100400	REMOVAL OF EXISTING STRUCTURES NO. 2	EACH	1		1
50104650	SLOPE WALL REMOVAL	SQ YD	2980	1490	1490
50105220	PIPE CULVERT REMOVAL	FOOT	714	357	357
50157300	PROTECTIVE SHIELD	SQ YD	2415	1145	1270
50200100	STRUCTURE EXCAVATION	CU YD	825	390	435
50300225	CONCRETE STRUCTURES	CU YD	851.3	411.4	439.9
50300255	CONCRETE SUPERSTRUCTURE	CU YD	1277.4	610.4	667.0
	* SPECIALTY ITEM				

MODEL: Quantities 1 [Sheet]
FILE NAME: P:\5XXX\52XX-53XX\5289_PTB 201-037 D7 VV_HLR\Work Order #3\CADD Data\Sheets\D774705-sht-SOQ.dgn

CDI CIVIL DESIGN, INC. WBE / DBE EFFINGHAM, IL LICENSE #184.003222

USER NAME = kulrich	DESIGNED -	REVISED -
	DRAWN -	REVISED -
	CHECKED -	REVISED -
PLOT DATE = 8/20/2025	DATE -	REVISED -

STATE OF ILLINOIS
DEPARTMENT OF TRANSPORTATION

SUMMARY OF QUANTITIES

SCALE: | SHEET 1 OF 5 SHEETS | STA. TO STA.

F.A.I. RTE.	SECTION	COUNTY	TOTAL SHEETS	SHEET NO.
72	(58-63 HVB) BR	MACON	122	3
		CONTRACT NO. 74705		
		ILLINOIS FED. AID PROJECT		

REV - MS

CODE NO.	ITEM	UNIT	TOTAL QUANTITY	CONSTRUCTION CODE 90% FEDERAL 10% STATE BRIDGE 0010 S.N. 058-0139	CONSTRUCTION CODE 90% FEDERAL 10% STATE BRIDGE 0010 S.N. 058-0140
50300300	PROTECTIVE COAT	SQ YD	5177	2463	2714
50500105	FURNISHING AND ERECTING STRUCTURAL STEEL	L SUM	1	0.5	0.5
50500505	STUD SHEAR CONNECTORS	EACH	22610	10710	11900
50800205	REINFORCEMENT BARS, EPOXY COATED	POUND	467610	225180	242430
50800515	BAR SPLICERS	EACH	2412	1207	1205
50800530	MECHANICAL SPLICERS	EACH	484	242	242
51100100	SLOPE WALL 4 INCH	SQ YD	2768	1242	1526
51200959	FURNISHING METAL SHELL PILES 14" X 0.312"	FOOT	5831	2870	2961
51200963	FURNISHING METAL SHELL PILES 16" X 0.375"	FOOT	2805	1320	1485
51202305	DRIVING PILES	FOOT	8636	4190	4446
51203200	TEST PILE METAL SHELLS	EACH	6	3	3
51500100	NAME PLATES	EACH	2	1	1
52000110	PREFORMED JOINT STRIP SEAL	FOOT	263	125	138
52100520	ANCHOR BOLTS, 1"	EACH	76	36	40
	* SPECIALTY ITEM				

CODE NO.	ITEM	UNIT	TOTAL QUANTITY	CONSTRUCTION CODE 90% FEDERAL 10% STATE BRIDGE 0010 S.N. 058-0139	CONSTRUCTION CODE 90% FEDERAL 10% STATE BRIDGE 0010 S.N. 058-0140
52100530	ANCHOR BOLTS, 1 1/4"	EACH	38	18	20
52200010	TEMPORARY SHEET PILING	SQ FT	2680	1340	1340
52200020	TEMPORARY SOIL RETENTION SYSTEM	SQ FT	1876	896	980
52318802	DRAINAGE SYSTEM FOR STRUCTURES	L SUM	1	0.5	0.5
542A1081	PIPE CULVERTS, CLASS A, TYPE 2 36"	FOOT	361	180	181
542A1921	PIPE CULVERTS, CLASS A, TYPE 3 36"	FOOT	343	172	171
54213681	PRECAST REINFORCED CONCRETE FLARED END SECTIONS 36"	EACH	4	2	2
55100700	STORM SEWER REMOVAL 15"	FOOT	377	188	189
58600101	GRANULAR BACKFILL FOR STRUCTURES	CU YD	600	280	320
58700300	CONCRETE SEALER	SQ FT	1848	878	970
59100100	GEOCOMPOSITE WALL DRAIN	SQ YD	290	140	150
60146304	PIPE UNDERDRAINS FOR STRUCTURES 4"	FOOT	424	204	220
60500060	REMOVING INLETS	EACH	13	6	7
* 63000001	STEEL PLATE BEAM GUARDRAIL, TYPE A, 6 FOOT POSTS	FOOT	938	500	438
	* SPECIALTY ITEM				

MODEL: Quantities 2 [Sheet]
FILE NAME: P:\5XXX\52XX-53XX\5289_PTB 201-037 D7 VV_HLR\Work Order #3\CADD Data\Sheets\D774705-sht-SOQ.dgn

CIVIL DESIGN, INC. WBE / DBE
EFFINGHAM, IL
LICENSE #184.003222

USER NAME = kulrich	DESIGNED -	REVISED -
	DRAWN -	REVISED -
	CHECKED -	REVISED -
PLOT DATE = 8/20/2025	DATE -	REVISED -

STATE OF ILLINOIS
DEPARTMENT OF TRANSPORTATION

SUMMARY OF QUANTITIES

SCALE: | SHEET 2 OF 5 SHEETS | STA. TO STA.

F.A.I. RTE.	SECTION	COUNTY	TOTAL SHEETS	SHEET NO.
72	(58-63 HVB) BR	MACON	122	4

CONTRACT NO. 74705

ILLINOIS | FED. AID PROJECT

REV - MS

	CODE NO.	ITEM	UNIT	TOTAL QUANTITY	CONSTRUCTION CODE 90% FEDERAL 10% STATE BRIDGE 0010 S.N. 058-0139	CONSTRUCTION CODE 90% FEDERAL 10% STATE BRIDGE 0010 S.N. 058-0140
*	63100045	TRAFFIC BARRIER TERMINAL, TYPE 2	EACH	2	2	
*	63100085	TRAFFIC BARRIER TERMINAL, TYPE 6	EACH	6	4	2
*	63100167	TRAFFIC BARRIER TERMINAL, TYPE 1 (SPECIAL) TANGENT	EACH	4	2	2
	63200310	GUARDRAIL REMOVAL	FOOT	1403	700	703
*	63300575	REMOVE AND REERECT RAIL ELEMENT OF EXISTING GUARDRAIL	FOOT	270	270	
*	63301210	REMOVE AND REERECT STEEL PLATE BEAM GUARDRAIL, TYPE A	FOOT	1055	475	580
*	63301990	REMOVE AND REERECT TRAFFIC BARRIER TERMINALS, TYPE 1	EACH	4	2	2
*	63302000	REMOVE AND REERECT TRAFFIC BARRIER TERMINALS, TYPE 2	EACH	2	2	
*	63302700	REMOVE AND REERECT TRAFFIC BARRIER TERMINALS, TYPE 6	EACH	6	4	2
	64200116	SHOULDER RUMBLE STRIPS, 16 INCH	FOOT	1300	697	603
	67000400	ENGINEER'S FIELD OFFICE, TYPE A	CAL MO	18	9	9
	67100100	MOBILIZATION	L SUM	1	0.5	0.5
	70100205	TRAFFIC CONTROL AND PROTECTION, STANDARD 701401	EACH	4	2	2
	70100310	TRAFFIC CONTROL AND PROTECTION, STANDARD 701421	L SUM	1	0.5	0.5
		* SPECIALTY ITEM				

CODE NO.	ITEM	UNIT	TOTAL QUANTITY	CONSTRUCTION CODE 90% FEDERAL 10% STATE BRIDGE 0010 S.N. 058-0139	CONSTRUCTION CODE 90% FEDERAL 10% STATE BRIDGE 0010 S.N. 058-0140
70100315	TRAFFIC CONTROL AND PROTECTION, STANDARD 701422	EACH	2	1	1
70100420	TRAFFIC CONTROL AND PROTECTION, STANDARD 701411	EACH	2	1	1
70100820	TRAFFIC CONTROL AND PROTECTION, STANDARD 701451	L SUM	1	0.5	0.5
70107005	PAVEMENT MARKING BLACKOUT TAPE, 5"	FOOT	5441	3600	1841
70107007	PAVEMENT MARKING BLACKOUT TAPE, 7"	FOOT	1312	820	492
70107009	PAVEMENT MARKING BLACKOUT TAPE, 9"	FOOT	981	463	518
70107025	CHANGEABLE MESSAGE SIGN	CAL DA	56	28	28
70300100	SHORT TERM PAVEMENT MARKING	FOOT	1744	752	992
70300150	SHORT TERM PAVEMENT MARKING REMOVAL	SQ FT	4204	2514	1690
70300221	TEMPORARY PAVEMENT MARKING - LINE 4"- PAINT	FOOT	34802	19584	15218
70300241	TEMPORARY PAVEMENT MARKING - LINE 6"- PAINT	FOOT	490	190	300
70300251	TEMPORARY PAVEMENT MARKING - LINE 8"- PAINT	FOOT	480	315	165
70400100	TEMPORARY CONCRETE BARRIER	FOOT	1600	762	838
70400200	RELOCATE TEMPORARY CONCRETE BARRIER	FOOT	1063	613	450
	* SPECIALTY ITEM				

MODEL: Quantities 3 [Sheet]
FILE NAME: P:\5XXX\52XX-53XX\5289_PTB 201-037 D7 VV_HLR\Work Order #3\CADD Data\Sheets\D774705-sht-SOQ.dgn

CDI CIVIL DESIGN, INC. WBE / DBE EFFINGHAM, IL LICENSE #184.003222

USER NAME = kulrich	DESIGNED -	REVISED -
	DRAWN -	REVISED -
	CHECKED -	REVISED -
PLOT DATE = 8/20/2025	DATE -	REVISED -

STATE OF ILLINOIS
DEPARTMENT OF TRANSPORTATION

SUMMARY OF QUANTITIES

SCALE: | SHEET 3 OF 5 SHEETS | STA. TO STA.

F.A.I. RTE.	SECTION	COUNTY	TOTAL SHEETS	SHEET NO.
72	(58-63 HVB) BR	MACON	122	5

CONTRACT NO. 74705

ILLINOIS | FED. AID PROJECT

REV - MS

	CODE NO.	ITEM	UNIT	TOTAL QUANTITY	CONSTRUCTION CODE 90% FEDERAL 10% STATE BRIDGE 0010 S.N. 058-0139	CONSTRUCTION CODE 90% FEDERAL 10% STATE BRIDGE 0010 S.N. 058-0140
	70600250	IMPACT ATTENUATORS, TEMPORARY (NON- REDIRECTIVE), TEST LEVEL 3	EACH	2	1	1
	70600350	IMPACT ATTENUATORS, RELOCATE (NON- REDIRECTIVE), TEST LEVEL 3	EACH	2	1	1
*	72501000	TERMINAL MARKER - DIRECT APPLIED	EACH	4	2	2
*	78004630	PREFORMED PLASTIC PAVEMENT MARKING, TYPE D - STANDARD - LINE 6"	FOOT	3474	1787	1687
*	78004640	PREFORMED PLASTIC PAVEMENT MARKING, TYPE D - STANDARD - LINE 8"	FOOT	480	315	165
*	78011035	GROOVING FOR RECESSED PAVEMENT MARKING 7"	FOOT	3474	1787	1687
*	78011045	GROOVING FOR RECESSED PAVEMENT MARKING 9"	FOOT	480	315	165
*	78100100	RAISED REFLECTIVE PAVEMENT MARKER	EACH	33	25	8
*	78200005	GUARDRAIL REFLECTORS, TYPE A	EACH	19	10	9
	78200011	BARRIER WALL REFLECTORS, TYPE C	EACH	32	17	15
	78300200	RAISED REFLECTIVE PAVEMENT MARKER REMOVAL	EACH	22	22	
	78300202	PAVEMENT MARKING REMOVAL - WATER BLASTING	SQ FT	13042	5730	7312
	X2501000	SEEDING, CLASS 2 (SPECIAL)	ACRE	0.75	0.38	0.37
	X4400110	TEMPORARY PAVEMENT REMOVAL	SQ YD	270	66	204
		* SPECIALTY ITEM				

CODE NO.	ITEM	UNIT	TOTAL QUANTITY	CONSTRUCTION CODE 90% FEDERAL 10% STATE BRIDGE 0010 S.N. 058-0139	CONSTRUCTION CODE 90% FEDERAL 10% STATE BRIDGE 0010 S.N. 058-0140
X5030250	BRIDGE DECK GROOVING (LONGITUDINAL)	SQ YD	3329	1487	1842
X5030305	CONCRETE WEARING SURFACE, 5"	SQ YD	873	414	459
X5040100	PRECAST BRIDGE APPROACH SLAB	SQ FT	7531	3571	3960
X5080530	BAR TERMINATORS	EACH	1246	590	656
X5230174	DRAINAGE SCUPPERS, DS-11	EACH	8	4	4
X6050208	FILLING EXISTING CULVERTS	CU YD	10	10	
X7010208	TRAFFIC CONTROL AND PROTECTION, STANDARD 701402 (SPECIAL)	EACH	6	3	3
X7200203	DETOUR SIGNING	L SUM	1	0.5	0.5
X7810400	TEMPORARY RAISED PAVEMENT MARKER	EACH	672	450	222
X7830050	RAISED REFLECTIVE PAVEMENT MARKER, REFLECTOR REMOVAL	EACH	21	21	
Z0029090	DIAMOND GRINDING (BRIDGE SECTION)	SQ YD	4301	2025	2276
Z0048665	RAILROAD PROTECTIVE LIABILITY INSURANCE	L SUM	1	0.5	0.5
Z0049799	PROTECTING OR RESETTING SURVEY MARKERS	EACH	2	1	1
Z0062456	TEMPORARY PAVEMENT	SQ YD	270	66	204
	* SPECIALTY ITEM				

MODEL: Quantities 4 [Sheet]
FILE NAME: P:\5XXX\52XX-53XX\5289_PTB 201-037 D7 VV_HLR\Work Order #3\CADD Data\Sheets\D774705-sht-SOQ.dgn

CIVIL DESIGN, INC.
WBE / DBE
EFFINGHAM, IL
LICENSE #184.003222

USER NAME = kulrich	DESIGNED -	REVISED -
	DRAWN -	REVISED -
	CHECKED -	REVISED -
PLOT DATE = 8/20/2025	DATE -	REVISED -

STATE OF ILLINOIS
DEPARTMENT OF TRANSPORTATION

SUMMARY OF QUANTITIES

SCALE: | SHEET 4 OF 5 SHEETS | STA. TO STA.

F.A.I. RTE.	SECTION	COUNTY	TOTAL SHEETS	SHEET NO.
72	(58-63 HVB) BR	MACON	122	6

CONTRACT NO. 74705

ILLINOIS | FED. AID PROJECT

REV - MS

	CODE NO.	ITEM	UNIT	TOTAL QUANTITY	CONSTRUCTION CODE 90% FEDERAL 10% STATE BRIDGE 0010 S.N. 058-0139	CONSTRUCTION CODE 90% FEDERAL 10% STATE BRIDGE 0010 S.N. 058-0140
	Z0073400	TEMPORARY SUPPORT SYSTEM	EACH	4	2	2
Ø	Z0076600	TRAINEES	HOUR	500	500	
Ø	Z0076604	TRAINEES TRAINING PROGRAM GRADUATE	HOUR	500	500	
		* SPECIALTY ITEM Ø 0042				

REV - MS

MODEL: Quantities 5 [Sheet]
FILE NAME: P:\5XXX\52XX-53XX\5289 - PTB 201-037 D7 VV_HLR\Work Order #3\CADD Data\Sheets\D774705-sht-SOQ.dgn

CDI CIVIL DESIGN, INC. WBE | DBE EFFINGHAM, IL LICENSE #184.003222

USER NAME = kulrich	DESIGNED -	REVISED -
	DRAWN -	REVISED -
	CHECKED -	REVISED -
PLOT DATE = 8/20/2025	DATE -	REVISED -

STATE OF ILLINOIS
DEPARTMENT OF TRANSPORTATION

SUMMARY OF QUANTITIES

SCALE: | SHEET 5 OF 5 SHEETS | STA. | TO STA.

F.A.I. RTE.	SECTION	COUNTY	TOTAL SHEETS	SHEET NO.
72	(58-63 HVB) BR	MACON	122	7

CONTRACT NO. 74705

ILLINOIS | FED. AID PROJECT

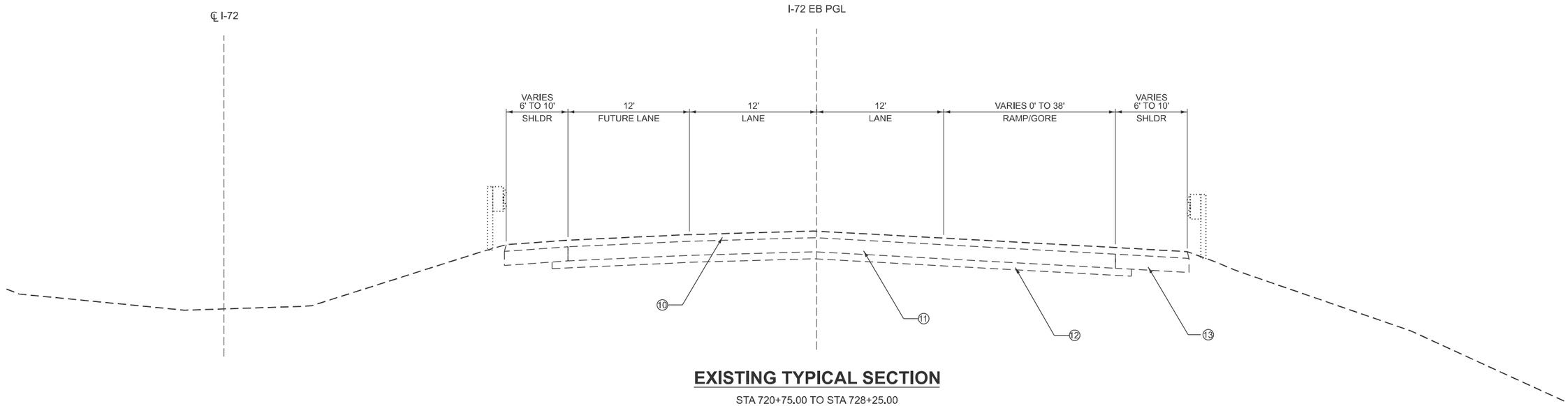

EXISTING TYPICAL SECTION

STA 720+75.00 TO STA 728+25.00

LEGEND

1. POLYMERIZED HMA SURFACE COURSE, IL-9.5, MIX "D", N90 (2")
2. POLYMERIZED HMA BINDER COURSE, IL-9.5FG, N90 (VARIABLE DEPTH)
3. HOT-MIX ASPHALT SURFACE REMOVAL, 2"
4. PCC SHOULDERS, 11 3/4"
5. HOT-MIX ASPHALT SHOULDERS, 8"
6. HOT-MIX ASPHALT SHOULDERS
7. PAVED SHOULDER REMOVAL
8. AGGREGATE SHOULDERS, TYPE B 4"
9. STEEL PLATE BEAM GUARDRAIL, TYPE A, 6' POSTS
10. 3 ¾" EXISTING HMA
11. 8" EXISTING C.R.P.C.C
12. 4" EXISTING AGGREGATE BASE
13. EXISTING STABILIZED SHOULDER

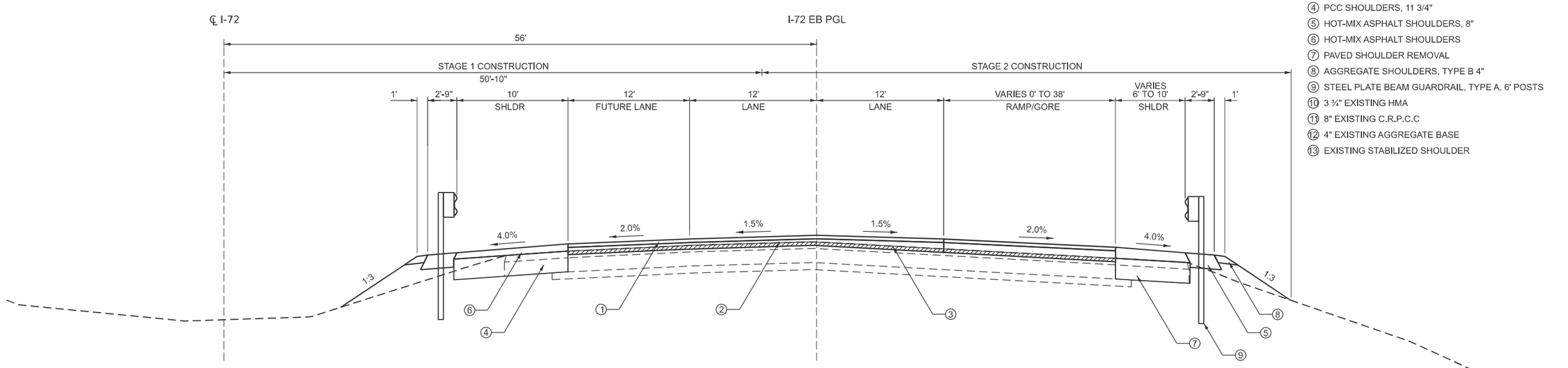

PROPOSED TYPICAL SECTION

STA 720+75.00 TO STA 728+25.00*

* PCC PAVEMENT CONNECTOR, APPROACH PAVEMENT, AND BRIDGE OMISSION STA. 722+33.29 TO STA. 725+98.10

MODEL: Typical Sections EB-1 [Sheet]
FILE NAME: P:\5XXX\52XX-53XX\5289 - PTB 201-037 D7 VV_HLR\Work Order #3\CADD Data\Sheets\D774705-sht-typical.dgn

CDI CIVIL DESIGN, INC. WBE / DBE EFFINGHAM, IL LICENSE #184.003222	USER NAME = kulrich	DESIGNED -	REVISED -	STATE OF ILLINOIS DEPARTMENT OF TRANSPORTATION	TYPICAL SECTIONS I-72 EAST BOUND	F.A.I. RTE.	SECTION	COUNTY	TOTAL SHEETS	SHEET NO.
		DRAWN -	REVISED -			72	(58-63 HVB) BR	MACON	122	8
		CHECKED -	REVISED -					CONTRACT NO. 74705		
	PLOT DATE = 8/20/2025	DATE -	REVISED -		SCALE: SHEET 1 OF 2 SHEETS STA. TO STA.		ILLINOIS	FED. AID PROJECT		

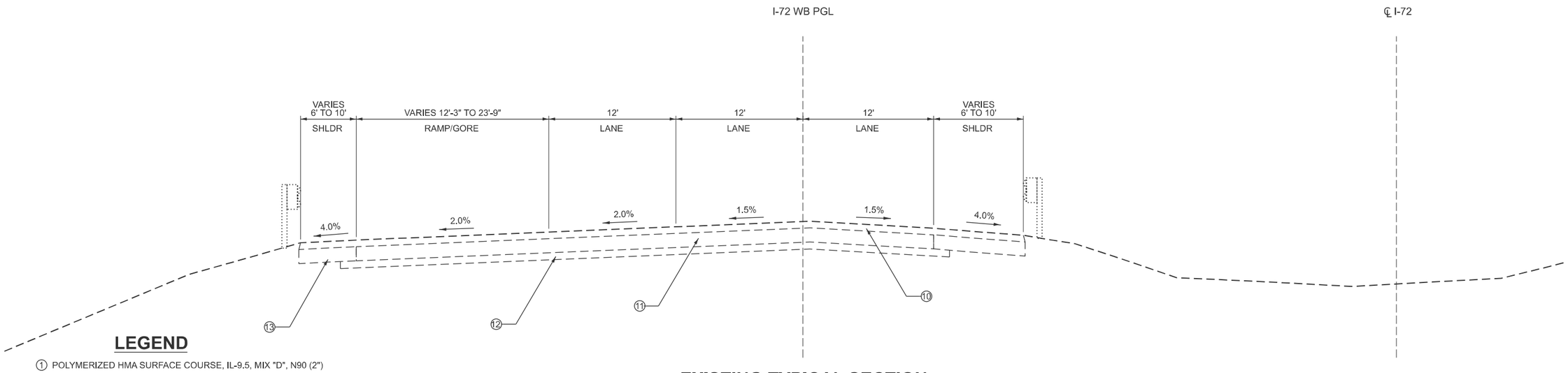

LEGEND

1. POLYMERIZED HMA SURFACE COURSE, IL-9.5, MIX "D", N90 (2")
2. POLYMERIZED HMA BINDER COURSE, IL-9.5FG, N90 (VARIABLE DEPTH)
3. HOT-MIX ASPHALT SURFACE REMOVAL, 2"
4. PCC SHOULDERS, 11 3/4"
5. HOT-MIX ASPHALT SHOULDERS, 8"
6. HOT-MIX ASPHALT SHOULDERS
7. PAVED SHOULDER REMOVAL
8. AGGREGATE SHOULDERS, TYPE B 4"
9. STEEL PLATE BEAM GUARDRAIL, TYPE A, 6' POSTS
10. 3 ¾" EXISTING HMA
11. 8" EXISTING C.R.P.C.C
12. 4" EXISTING AGGREGATE BASE
13. EXISTING STABILIZED SHOULDER

EXISTING TYPICAL SECTION

STA 721+00.00 TO STA 727+25

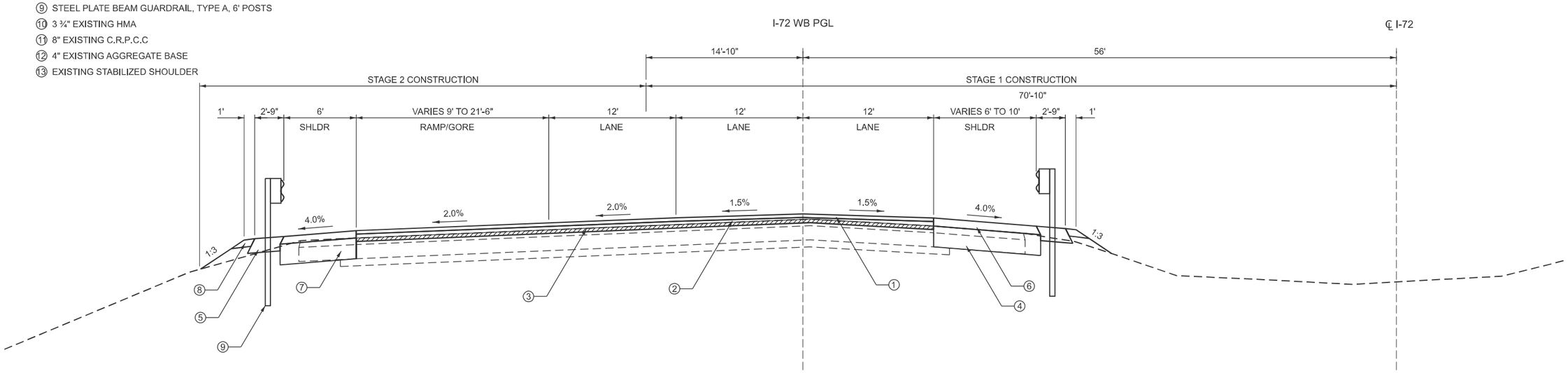

PROPOSED TYPICAL SECTION

STA 721+00.00 TO STA 727+25.00*

* PCC PAVEMENT CONNECTOR, APPROACH PAVEMENT, AND BRIDGE OMISSION STA. 722+16.95 TO STA. 725+81.64

MODEL: Typical Sections WB-1 [Sheet]
FILE NAME: P:\5XXX\52XX-53XX\5289 - PTB 201-037 D7 VV_HLR\Work Order #3\CADD Data\Sheets\D774705-sht-typical.dgn

CDI CIVIL DESIGN, INC. WBE | DBE EFFINGHAM, IL LICENSE #184.003222	USER NAME = kulrich	DESIGNED -	REVISED -	STATE OF ILLINOIS DEPARTMENT OF TRANSPORTATION	TYPICAL SECTIONS I-72 WEST BOUND	F.A.I. RTE.	SECTION	COUNTY	TOTAL SHEETS	SHEET NO.
		DRAWN -	REVISED -			72	(58-63 HVB) BR	MACON	122	9
		CHECKED -	REVISED -					CONTRACT NO. 74705		
	PLOT DATE = 8/21/2025	DATE -	REVISED -		SCALE: SHEET 2 OF 2 SHEETS STA. TO STA.		ILLINOIS	FED. AID PROJECT		

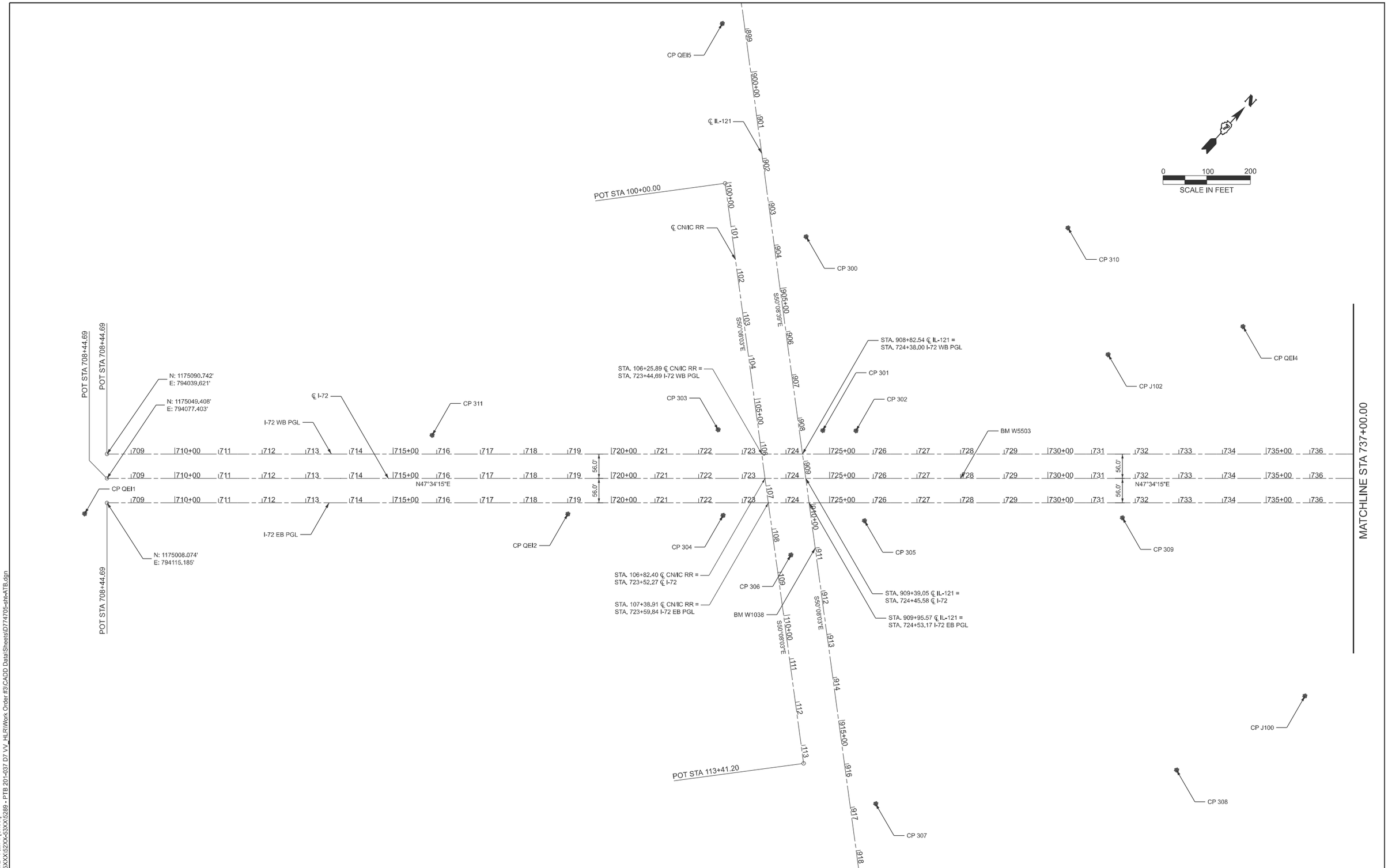

MODEL: ExCL_I72 - Plan 1 [Sheet]
FILE NAME: P:\5XXX\52XX-53XX\5289 - PTB 201-037 D7 VV_HLR\Work Order #3\CADD Data\Sheets\D774705-sht-ATB.dgn

CDI
CIVIL DESIGN, INC.
WBE | DBE
EFFINGHAM, IL
LICENSE #184.003222

USER NAME = kulrich	DESIGNED -	REVISED -
	DRAWN -	REVISED -
	CHECKED -	REVISED -
PLOT DATE = 8/20/2025	DATE -	REVISED -

STATE OF ILLINOIS
DEPARTMENT OF TRANSPORTATION

ALIGNMENT, TIES, & BENCHMARKS
I-72 ALIGNMENT

SCALE: 1"=100' | SHEET 1 OF 6 SHEETS | STA. 707+00.00 TO STA. 737+00.00

F.A.I. RTE.	SECTION	COUNTY	TOTAL SHEETS	SHEET NO.
72	(58-63 HVB) BR	MACON	122	10

CONTRACT NO. 74705

ILLINOIS | FED. AID PROJECT

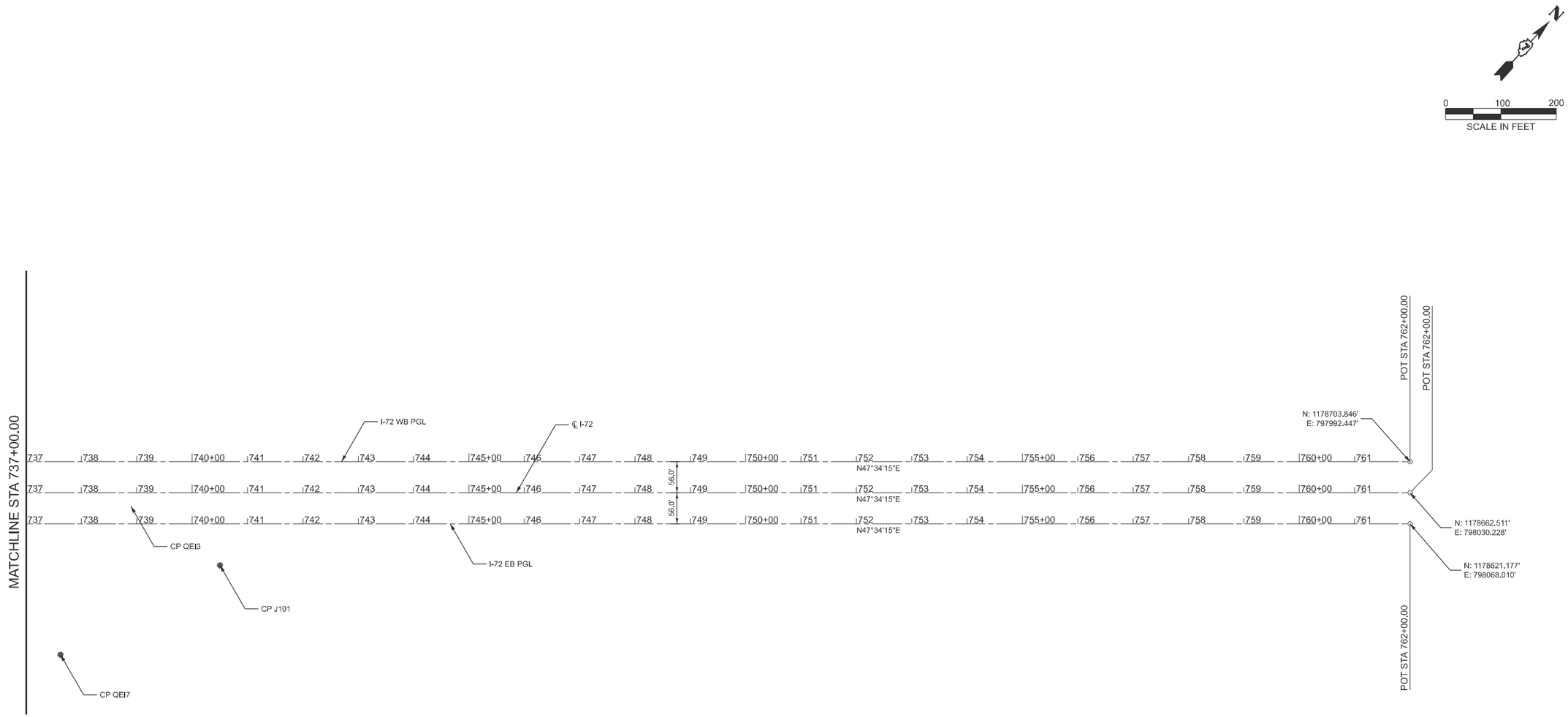

MODEL: ExCL_I72 - Plan 2 [Sheet]
FILE NAME: P:\5XXX\52XX-53XX\5289 - PTB 201-037 D7 VV_HLR\Work Order #3\CADD Data\Sheets\D774705-sht-ATB.dgn

CDI
CIVIL DESIGN, INC.
WBE | DBE
EFFINGHAM, IL
LICENSE #184.003222

USER NAME = kulrich	DESIGNED -	REVISED -	
	DRAWN -	REVISED -	
	CHECKED -	REVISED -	
PLOT DATE = 8/21/2025	DATE -	REVISED -	

STATE OF ILLINOIS
DEPARTMENT OF TRANSPORTATION

ALIGNMENT, TIES, & BENCHMARKS
I-72 ALIGNMENT

SCALE: 1"=100' | SHEET 2 OF 6 SHEETS | STA. 737+00.00 TO STA. 767+00.00

F.A.I. RTE.	SECTION	COUNTY	TOTAL SHEETS	SHEET NO.
72	(58-63 HVB) BR	MACON	122	11
		CONTRACT NO. 74705		
		ILLINOIS	FED. AID PROJECT	

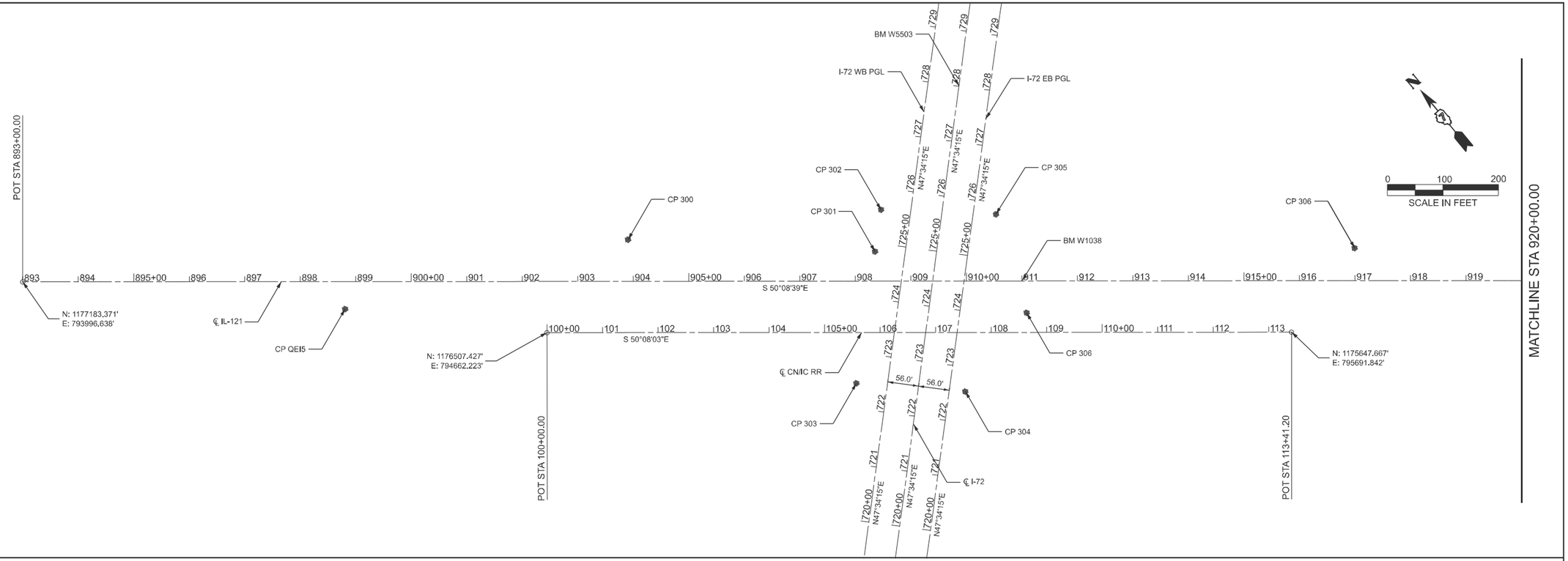

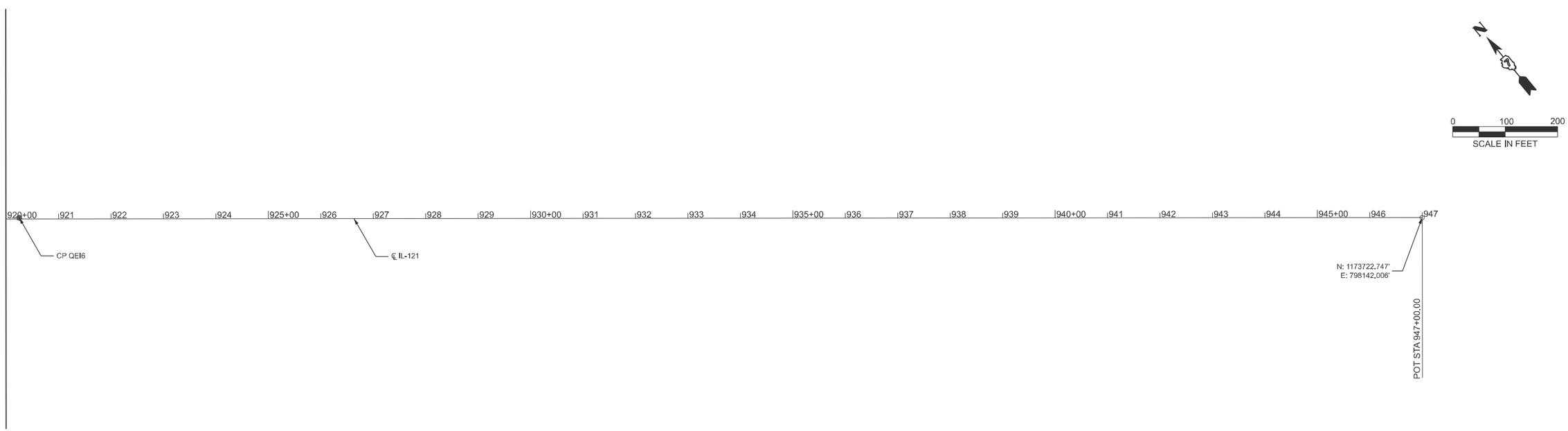

MODEL: ExCL_IL121 - Plan 1 [Sheet]
FILE NAME: P:\5XXX\52XX-53XX\5289 - PTB 201-037 D7 VV_HLR\Work Order #3\CADD Data\Sheets\D774705-sht-ATB.dgn

CDI
CIVIL DESIGN, INC.
WBE | DBE
EFFINGHAM, IL
LICENSE #184.003222

USER NAME = kulrich	DESIGNED -	REVISED -
	DRAWN -	REVISED -
	CHECKED -	REVISED -
PLOT DATE = 8/21/2025	DATE -	REVISED -

STATE OF ILLINOIS
DEPARTMENT OF TRANSPORTATION

ALIGNMENT, TIES, & BENCHMARKS
IL-121 ALIGNMENT

SCALE: 1"=100' | SHEET 3 OF 6 SHEETS | STA. 893+00.00 TO STA. 920+00.00

F.A.I. RTE.	SECTION	COUNTY	TOTAL SHEETS	SHEET NO.
72	(58-63 HVB) BR	MACON	122	12

CONTRACT NO. 74705

ILLINOIS | FED. AID PROJECT

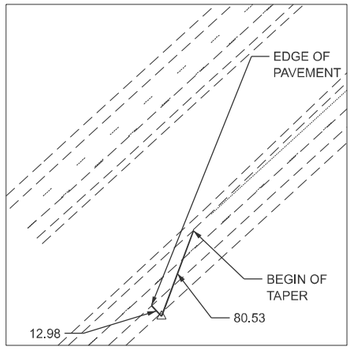

CONTROL POINT QEI1

MONUMENT TYPE
I-72 EB ALIGNMENT STA 707+93.63, 24.75' RT
N 1174955.360
E 794094.196

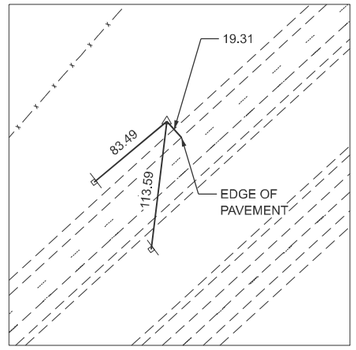

CONTROL POINT 311

MONUMENT TYPE
I-72 WB ALIGNMENT STA 715+89.70, 43.19' LT
N 1175625.262
E 794560.386

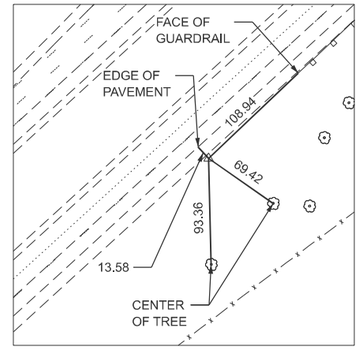

CONTROL POINT QEI2

MONUMENT TYPE
I-72 EB ALIGNMENT STA 719+00.55, 25.36' RT
N 1175701.719
E 794911.643

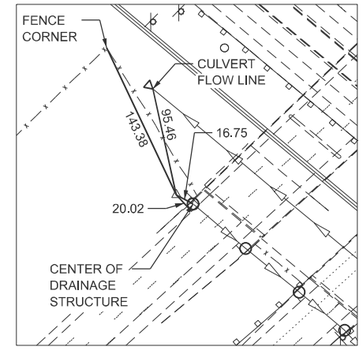

CONTROL POINT 303

MONUMENT TYPE
I-72 WB ALIGNMENT STA 722+44.82, 55.60' LT
N 1176076.416
E 795035.560

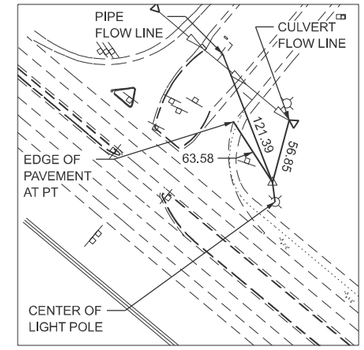

CONTROL POINT 300

MONUMENT TYPE
IL-121 ALIGNMENT STA 903+90.32, 75.14' LT
N 1176538.839
E 794885.953

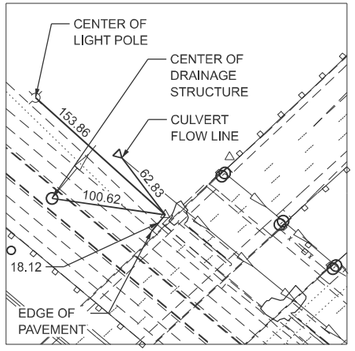

CONTROL POINT 301

MONUMENT TYPE
IL-121 ALIGNMENT STA 908+35.29, 53.38' LT
N 1176236.968
E 795213.597

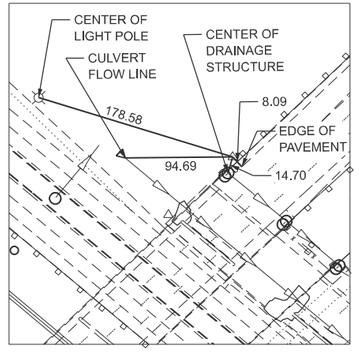

CONTROL POINT 302

MONUMENT TYPE
IL-121 STA 908+46.11, 128.71' LT
N 1176287.864
E 795270.175

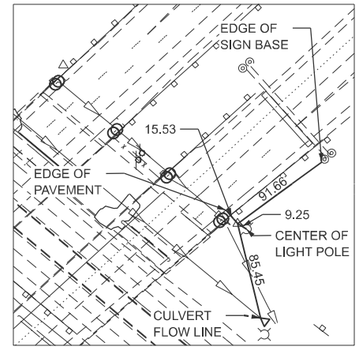

CONTROL POINT 305

MONUMENT TYPE
IL-121 ALIGNMENT STA 910+53.12, 120.13' LT
N 1176148.610
E 795423.591

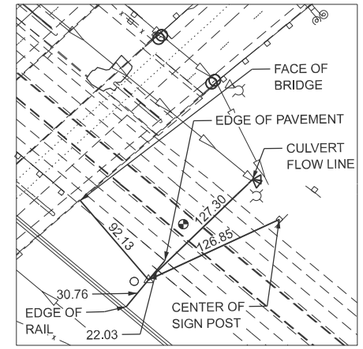

CONTROL POINT 306

MONUMENT TYPE
IL-121 ALIGNMENT STA 911+08.16, 57.26' RT
N 1175977.170
E 795352.165

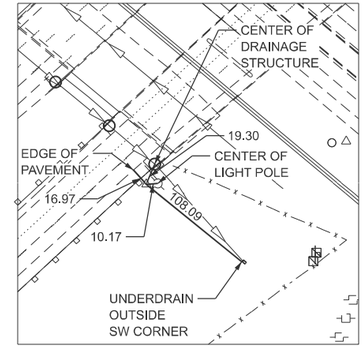

CONTROL POINT 304

MONUMENT TYPE
I-72 EB ALIGNMENT STA 722+56.19, 28.64' RT
N 1175939.241
E 795176.350

N

0 100 200
SCALE IN FEET

MODEL: TIE SHEETS [Sheet]
FILE NAME: P:\5XXX\52XX-33XX\5289 - PTB 207-037 D7 VV_HLR\Work Order #3\CADD Data\Sheets\D774705-sht-TIEPOINTS.dgn

CDI
CIVIL DESIGN, INC.
WBE | DBE
EFFINGHAM, IL
LICENSE #184.003222

USER NAME = kulrich	DESIGNED -	REVISED -	
	DRAWN -	REVISED -	
	CHECKED -	REVISED -	
PLOT DATE = 8/20/2025	DATE -	REVISED -	

STATE OF ILLINOIS
DEPARTMENT OF TRANSPORTATION

ALIGNMENT, TIES, & BENCHMARKS
CONTROL AND ALIGNMENT TIES

SCALE: 1"=100' | SHEET 4 OF 6 SHEETS | STA. | TO STA.

F.A.I. RTE.	SECTION	COUNTY	TOTAL SHEETS	SHEET NO.
72	(58-63 HVB) BR	MACON	122	13
		CONTRACT NO. 74705		
	ILLINOIS	FED. AID PROJECT		

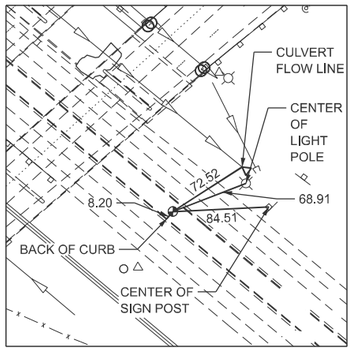

BENCHMARK W1038

MONUMENT TYPE
IL-121 ALIGNMENT STA 911+00.22, 0.09' LT
N 1176026.281
E 795382.822
ELEV. 682.920

CONTROL POINT QEI5

MONUMENT TYPE
IL-121 ALIGNMENT STA 898+80.54, 49.51' RT
N 1176769.843
E 794414.739

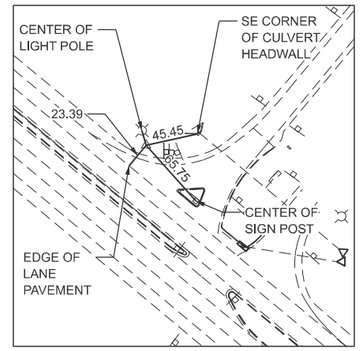

CONTROL POINT 307

MONUMENT TYPE
IL-121 ALIGNMENT STA 916+99.14, 58.83' LT
N 1175687.548
E 795880.236

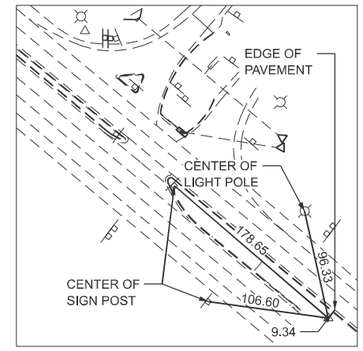

CONTROL POINT QEI6

MONUMENT TYPE
IL-121 ALIGNMENT STA 920+25.17, 2.15' LT
N 1175435.104
E 796094.190

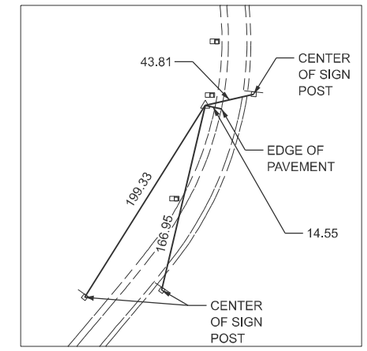

CONTROL POINT 308

MONUMENT TYPE
IL-121 ALIGNMENT STA 917+15.12, 752.18' LT
N 1176209.562
E 796336.835

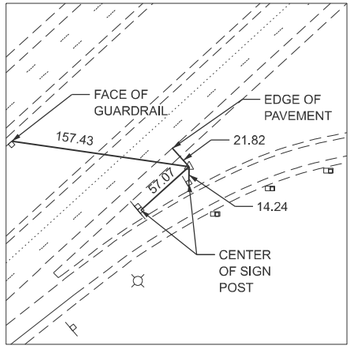

CONTROL POINT 309

MONUMENT TYPE
I-72 EB ALIGNMENT STA 731+70.82, '34.01 LT
N 1176552.358
E 795855.082

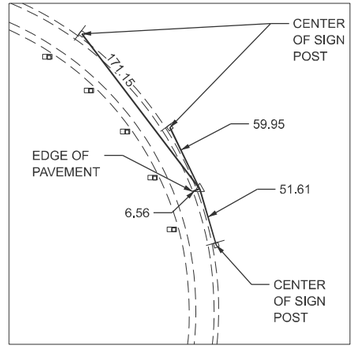

CONTROL POINT J102

MONUMENT TYPE
I-72 WB ALIGNMENT STA 731+38.11, 227.82' LT
N 1176806.217
E 795578.726

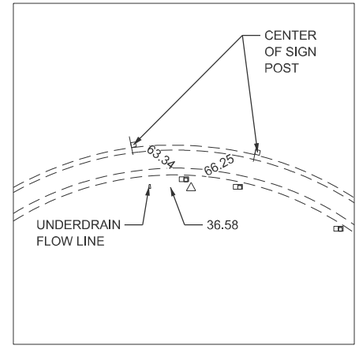

CONTROL POINT 310

MONUMENT TYPE
I-72 WB ALIGNMENT STA 730+46.11, 518.18' LT
N 1176958.463
E 795314.912

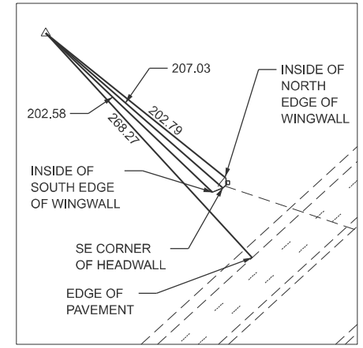

CONTROL POINT QEI4

MONUMENT TYPE
I-72 WB ALIGNMENT STA 734+46.90, 292.02' LT
N 1177061.938
E 795763.329

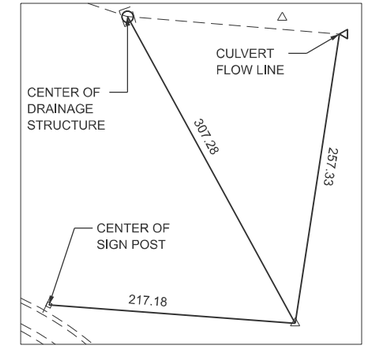

CONTROL POINT J100

MONUMENT TYPE
I-72 EB ALIGNMENT STA 735+89.04, 442.48' RT
N 1176533.024
E 796439.352

N

0 100 200
SCALE IN FEET

MODEL: TIE SHEETS-2 [Sheet]
FILE NAME: P:\5XXX\52XX-33XX\5289 - PTB 201-037 D7 VV_HLR\Work Order #3\CADD Data\Sheets\D774705-sht-TIEPOINTS.dgn

CDI
CIVIL DESIGN, INC.
WBE | DBE
EFFINGHAM, IL
LICENSE #184.003222

USER NAME = kulrich	DESIGNED -	REVISED -	
	DRAWN -	REVISED -	
	CHECKED -	REVISED -	
PLOT DATE = 8/21/2025	DATE -	REVISED -	

STATE OF ILLINOIS
DEPARTMENT OF TRANSPORTATION

ALIGNMENT, TIES, & BENCHMARKS
CONTROL AND ALIGNMENT TIES

SCALE: | SHEET 5 OF 6 SHEETS | STA. | TO STA.

F.A.I. RTE.	SECTION	COUNTY	TOTAL SHEETS	SHEET NO.
72	(58-63 HVB) BR	MACON	122	14
		CONTRACT NO. 74705		
	ILLINOIS	FED. AID PROJECT		

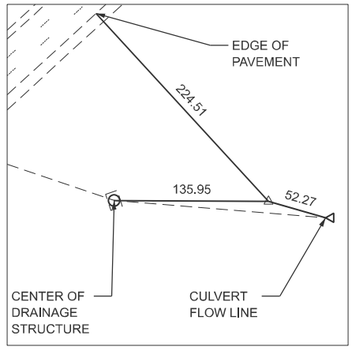

CONTROL POINT QEI7

MONUMENT TYPE
I-72 EB ALIGNMENT STA 737+62.02, 236.34' RT
N 1176801.881
E 796427.956

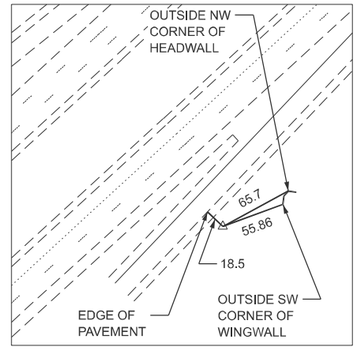

CONTROL POINT J101

MONUMENT TYPE
I-72 EB ALIGNMENT STA 740+50.04, 74.95' RT
N 1177115.329
E 796531.659

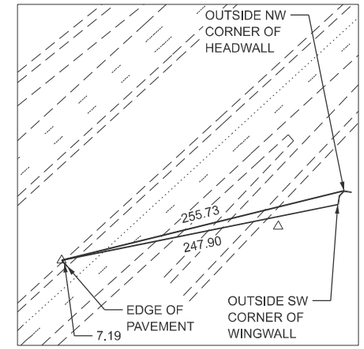

CONTROL POINT QEI3

MONUMENT TYPE
I-72 EB ALIGNMENT STA 738+89.24, 31.54' LT
N 1177085.443
E 796341.127

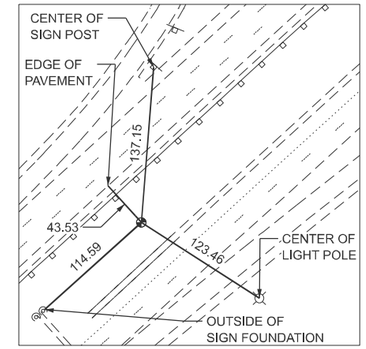

BENCHMARK W5503

MONUMENT TYPE
I-72 ℄ ALIGNMENT STA 728+00.12, 0.01' RT
N 1176368.680
E 795520.738
ELEV. 704.476

STATION EQUATIONS

ALIGNMENT	STATION	ALIGNMENT	STATION
CL CN/IC RR	106+25.89	I-72 WB PGL	723+44.69
CL CN/IC RR	106+82.40	CL I-72	723+52.27
CL CN/IC RR	107+38.91	I-72 EB PGL	723+59.84
CL IL-121	908+82.54	I-72 WB PGL	724+38.00
CL IL-121	909+39.05	CL I-72	724+45.58
CL IL-121	909+95.57	I-72 EB PGL	724+53.17

BENCHMARKS

NAME	ELEVATION	DESCRIPTION
W1038	682.920	
W5503	704.476	

ALIGNMENT COORDINATES CL I-72

	STATION	NORTHING	EASTING
POB	708+44.69	1175049.442	794077.440
POT	762+00.00	1178662.511	798030.228

ALIGNMENT COORDINATES I-72 WB PGL

	STATION	NORTHING	EASTING
POB	708+44.69	1175090.776	794039.658
POT	762+00.00	1178703.846	797992.447

ALIGNMENT COORDINATES I-72 EB PGL

	STATION	NORTHING	EASTING
POB	708+44.69	1175008.006	794115.111
POT	762+00.00	1178621.177	798068.010

ALIGNMENT COORDINATES CL IL-121

	STATION	NORTHING	EASTING
POB	892+96.22	1177182.314	793997.904
POT	947+43.70	1173691.297	798179.679

ALIGNMENT COORDINATES CL CN/IC RR

	STATION	NORTHING	EASTING
POB	100+00.00	1176503.947	794666.391
POT	113+41.20	1175644.249	795695.827

CONTROL POINT COORDINATES

NAME	NORTHING	EASTING
300	1176538.839	794885.953
301	1176236.968	795213.597
302	1176287.864	795270.175
303	1176076.416	795035.560
304	1175939.241	795178.350
305	1176148.610	795423.591
306	1175977.170	795352.165
307	1175687.548	795880.236
308	1176209.562	796338.835
309	1176552.358	795855.082
310	1176958.463	795314.912
311	1175625.262	794560.386
J100	1176533.024	796439.352
J101	1177115.329	796531.659
J102	1176806.217	795578.726
QEI1	1174955.360	794094.196
QEI2	1175701.719	794911.643
QEI3	1177085.443	796341.127
QEI4	1177061.938	795763.329
QEI5	1176769.843	794414.739
QEI6	1175435.104	796094.190
QEI7	1176801.881	796427.956

N

0 100 200
SCALE IN FEET

MODEL: TIE SHEETS-3 [Sheet]
FILE NAME: P:\5XXX\52XX-53XX\5289 - PTB 201-037 D7 VV - HLR\Work Order #3\CADD Data\Sheets\D774705-sht-TIEPOINTS.dgn

CDI CIVIL DESIGN, INC. WBE | DBE EFFINGHAM, IL LICENSE #184.003222

USER NAME = kulrich	DESIGNED -	REVISED -
	DRAWN -	REVISED -
	CHECKED -	REVISED -
PLOT DATE = 8/21/2025	DATE -	REVISED -

STATE OF ILLINOIS
DEPARTMENT OF TRANSPORTATION

ALIGNMENT, TIES, & BENCHMARKS
CONTROL AND ALIGNMENT TIES

SCALE: 1"=100' | SHEET 6 OF 6 SHEETS | STA. | TO STA.

F.A.I. RTE.	SECTION	COUNTY	TOTAL SHEETS	SHEET NO.
72	(56-63 HVB) BR	MACON	122	15

CONTRACT NO. 74705
ILLINOIS | FED. AID PROJECT

EARTHWORK SCHEDULE

20200100

LOCATION	EARTH EXC (CUT) CU YD	EARTH EXC ADJ SHRINK 25% CU YD	EMBANK (FILL) CU YD	EARTHWORK BALANCE WASTE (+) SHORTAGE (-) CU YD	EARTH EXCAVATION CU YD
I-72 EB STAGE 1					
STA. 720+75 - 722+50	21.6	16.2	14.6	1.6	21.6
STA. 726+00 - 728+25	26.3	19.8	26.9	-7.1	26.3
I-72 WB STAGE 1					
STA. 721+00 - 722+50	11.3	8.5	2.7	5.8	11.3
STA. 725+50 - 727+25	14.8	11.1	3.7	7.4	14.8
I-72 EB STAGE 2 & 3					
STA. 720+75 - 722+50	12.6	9.5	6.1	3.4	12.6
STA. 726+00 - 728+25	2.1	1.6	13.1	-11.5	2.1
I-72 WB STAGE 2 & 3					
STA. 721+00 - 722+50	2.8	2.1	2.5	-0.4	2.8
STA. 725+50 - 727+25	9.2	6.9	3.0	3.9	9.2
TOTAL	**101**	**76**	**73**	**4**	**101**

MODEL: Schedule 1 [Sheet]
FILE NAME: P:\5XXX\52XX-53XX\5289 - PTB 201-037 D7 VV_HLR\Work Order #3\CADD Data\Sheets\D774705-sht-schedule.dgn

CIVIL DESIGN, INC.
WBE | DBE
EFFINGHAM, IL
LICENSE #184.003222

USER NAME = kulrich	DESIGNED -	REVISED -	
	DRAWN -	REVISED -	
	CHECKED -	REVISED -	
PLOT DATE = 8/20/2025	DATE -	REVISED -	

STATE OF ILLINOIS
DEPARTMENT OF TRANSPORTATION

SCHEDULE OF QUANTITIES

SCALE: | SHEET 1 OF 9 SHEETS | STA. TO STA.

F.A.I. RTE.	SECTION	COUNTY	TOTAL SHEETS	SHEET NO.
72	(58-63 HVB) BR	MACON	122	16

CONTRACT NO. 74705

ILLINOIS | FED. AID PROJECT

20800150 TRENCH BACKFILL

CUYD	IL-121	OFFSET
685.3	STA 907+29.4 - 910+89.5	RT
887.5	STA 907+76.9 - 911+19.0	LT
1573	**TOTAL**	

28000250 TEMPORARY EROSION CONTROL SEEDING

POUND	I-72 EB	OFFSET
6.9	STA 719+22.0 - 722+77.1	LT, 2 APPLICATIONS
15.1	STA 719+80.0 - 723+53.7	RT, 2 APPLICATIONS
17.2	STA 725+00.3 - 728+25.0	RT, 2 APPLICATIONS
9.5	STA 725+42.3 - 728+25.0	LT, 2 APPLICATIONS
	I-72 WB	
6	STA 721+00.0 - 722+84.7	RT, 2 APPLICATIONS
13.9	STA 721+00.0 - 723+25.2	LT, 2 APPLICATIONS
13.4	STA 724+74.2 - 727+43.5	LT, 2 APPLICATIONS
9.1	STA 725+37.8 - 730+67.3	RT, 2 APPLICATIONS
	IL-121	
22.3	STA 908+06.0 - 710+37.3	RT, 2 APPLICATIONS
3.0	STA 908+39.9 - 910+31.8	LT, 2 APPLICATIONS
117	**TOTAL**	

28000305 TEMPORARY DITCH CHECKS

FOOT	I-72	OFFSET
15	STA 719+07.7	CL
11	STA 730+77.7	CL
	IL-121	
10	STA 910+98.9	RT
7	STA 911+21.9	RT
15	STA 911.57.7	LT
58	**TOTAL**	

28000400 PERIMETER EROSION BARRIER

FOOT	CL I-72 EB	OFFSET
344.6	STA 719+17.0 - 722+47.1	LT
305.6	STA 719+75.0 - 722+76.2	RT
272.1	STA 725+67.0 - 728+30.0	RT
270.9	STA 725+72.8 - 728+30.0	LT
	CL I-72 WB	
174.7	STA 720+95.0 - 722+44.8	RT
158.5	STA 720+95.0 - 722+51.2	LT
214.6	STA 725+38.7 - 727+48.5	LT
529.9	STA 725+68.8 - 730+72.3	RT
2271	**TOTAL**	

28000500 INLET AND PIPE PROTECTION

EACH	IL-121	OFFSET
1	STA 907+29.4	125.6' RT
1	STA 907+76.9	67.3' LT
2.0	**TOTAL**	

40600295 POLYMERIZED BITUMINOUS MATERIALS (TACK COAT) (1 OF 2)

POUND	I-72 EB	OFFSET
28.6	STA. 720+75.0 - 721+22.5	RT, MAINLINE
57.1	STA. 720+75.0 - 721+22.5	LT, MAINLINE
99.7	STA. 721+22.5 - 722+33.3	RT, MAINLINE
199.4	STA. 721+22.5 - 722+33.3	LT, MAINLINE
177.3	STA. 725+98.1 - 727+95.0	RT, MAINLINE
273.2	STA. 725+98.1 - 727+95.0	RT, GORE / RAMP
354.5	STA. 725+98.1 - 727+95.0	LT, MAINLINE
18.1	STA. 727+95.0 - 728+25.0	RT, MAINLINE
35.1	STA. 727+95.0 - 728+25.0	RT, GORE / RAMP
36.1	STA. 727+95.0 - 728+25.0	LT, MAINLINE
	I-72 WB	
44.3	STA. 721+00.0 - 721+73.7	RT, MAINLINE
88.5	STA. 721+00.0 - 721+73.7	LT, MAINLINE
38.7	STA. 721+00.0 - 721+73.7	LT, RAMP
39	STA. 721+73.7 - 722+17.0	RT, MAINLINE
77.9	STA. 721+73.7 - 722+17.0	LT, MAINLINE
36.1	STA. 721+73.7 - 722+17.0	LT, RAMP
101.8	STA. 725+81.6 - 726+94.7	RT, MAINLINE
203.5	STA. 725+81.6 - 726+94.7	LT, MAINLINE
163.9	STA. 725+81.6 - 726+94.7	LT, GORE / RAMP
18.3	STA. 726+94.7 - 727+25.0	RT, MAINLINE
36.5	STA. 726+94.7 - 727+25.0	LT, MAINLINE
30.7	STA. 726+94.7 - 727+25.0	LT, GORE / RAMP
	I-72 EB SHOULDERS	
16.5	STA. 720+75.0 - 721+08.0	RT, BUTT JOINT
48.9	STA. 721+08.0 - 722+05.6	RT, SURFACE OVERLAY
20.8	STA. 722+05.6 - 722+33.3	RT, SURFACE & BINDER OVERLAY
16.5	STA. 720+75.0 - 721+08.0	LT, BUTT JOINT
48.9	STA. 721+08.0 - 722+05.6	LT, SURFACE OVERLAY
20.8	STA. 722+05.6 - 722+33.3	LT, SURFACE & BINDER OVERLAY
47.3	STA. 725+98.1 - 726+95.1	RT, SURFACE & BINDER OVERLAY
39.7	STA. 726+95.1 - 728+01.0	RT, SURFACE OVERLAY
9.8	STA. 728+01.0 - 728+25.0	RT, BUTT JOINT
72.8	STA. 725+98.1 - 726+95.1	LT, SURFACE & BINDER OVERLAY
51.6	STA. 726+95.1 - 728+01.0	LT, SURFACE OVERLAY
8	STA. 728+01.0 - 728+25.0	LT, BUTT JOINT
	I-72 WB SHOULDERS	
15	STA. 721+00.0 - 721+50.0	LT, BUTT JOINT
20.2	STA. 721+50.0 - 722+17.0	LT, SURFACE OVERLAY
21.1	STA. 721+00.0 - 721+50.0	RT, BUTT JOINT
33.6	STA. 721+50.0 - 722+17.0	RT, SURFACE OVERLAY
4.4	STA. 725+81.6 - 725+91.3	LT, SURFACE & BINDER OVERLAY
32.7	STA. 725+91.3 - 727+00.0	LT, SURFACE OVERLAY
7.5	STA. 727+00.0 - 727+25.0	LT, BUTT JOINT
7.3	STA. 725+81.6 - 725+91.3	RT, SURFACE & BINDER OVERLAY
54.4	STA. 725+91.3 - 727+00.0	RT, SURFACE OVERLAY
12.5	STA. 727+00.0 - 727+25.0	RT, BUTT JOINT
2769	**SUBTOTAL**	

40600295 POLYMERIZED BITUMINOUS MATERIALS (TACK COAT) (2 OF 2)

	I-72 EB 8" SHOULDERS	
0.5	STA. 720+01.7 - 720+08.0	RT
36.2	STA. 720+08.0 - 722+70.9	RT
0.5	STA. 719+94.0 - 720+00.0	LT
36.2	STA. 720+00.0 - 722+63.1	LT
17.5	STA. 725+67.9 - 726+94.8	LT
0.4	STA. 726+94.8 - 727+00.4	RT
17.5	STA. 725+59.2 - 726+86.3	LT
0.4	STA. 726+86.3 - 726+91.8	LT
	I-72 WB 8" SHOULDERS	
60.2	STA. 725+51.6 - 729+89.3	RT
0.5	STA. 729+89.3 - 729+95.3	RT
24.4	STA. 725+42.0 - 727+19.0	LT
0.5	STA. 727+19.0 - 727+25.0	LT
195	**SUBTOTAL**	
2964	**TOTAL**	

40600370 LONGITUDINAL JOINT SEALANT

FOOT	I-72 EB	OFFSET
158.3	STA. 720+75.0 - 722+33.3	CL
158.3	STA. 720+75.0 - 722+33.3	LT
226.9	STA. 725+98.1 - 728+25.0	CL
226.9	STA. 725+98.1 - 728+25.0	LT
	I-72 WB	
117	STA. 721+00.0 - 722+17.0	CL
117	STA. 721+00.0 - 722+17.0	LT
117	STA. 721+00.0 - 722+17.0	LT
143.4	STA. 725+81.6 - 727+25.0	CL
143.4	STA. 725+81.6 - 727+25.0	LT
143.1	STA. 725+81.6 - 727+25.0	LT
1552	**TOTAL**	

40600982 HOT-MIX ASPHALT SURFACE REMOVAL - BUTT JOINT

SQ YD	I-72 EB	OFFSET
13.4	STA 720+75.0	LT/RT
13.4	STA 728+25.0	LT/RT
9.2	STA 728+25.0	RT/RAMP
	I-72 WB	
13.4	STA 721+00.0	LT/RT
13.4	STA 727+25.0	LT/RT
8.3	STA 727+25.0	LT/RAMP
72	**TOTAL**	

40600985 PORTLAND CEMENT CONCRETE SURFACE REMOVAL - BUTT JOINT

SQ YD	I-72 EB	OFFSET
3.8	STA 720+75.0	LT SHOULDER
3.8	STA 720+75.0	RT SHOULDER
2.1	STA 728+25.0	LT SHOULDER
2.8	STA 728+25.0	RT/GORE
	I-72 WB	
2.3	STA 721+00.0	LT SHOULDER
2.6	STA 721+00.0	RT SHOULDER
1.6	STA 727+25.0	LT/GORE
3.8	STA 727+25.0	RT SHOULDER
23	**TOTAL**	

40600990 TEMPORARY RAMP

SQ YD	I-72 EB, FOR STAGE 2 TRAFFIC	OFFSET
38.2	STA 722+33.3	LT
42.2	STA 725+98.1	LT
	I-72 WB, FOR STAGE 2 TRAFFIC	
29.4	STA 722+17.0	LT/RT
42.1	STA 725+81.6	LT/RT
	I-72 EB, FOR STAGE 3 TRAFFIC, ADDITIONAL WIDTH	
6.0	STA 722+33.3	LT
6.7	STA 725+98.1	LT
	I-72 WB, FOR STAGE 3 TRAFFIC, ADDITIONAL WIDTH	
3.7	STA 722+17.0	LT
5.2	STA 725+81.6	LT
	I-72 EB, AFTER MILLING	
20.8	STA 720+75.0	LT/RT
125.4	STA 722+33.3	LT/RT
158.8	STA 725+98.1	LT/RT
27.4	STA. 728+25.0	LT/RT
	I-72 WB, AFTER MILLING	
21.9	STA 721+00.0	LT/RT
104.2	STA 722+17.0	LT/RT
143.9	STA 725+81.6	LT/RT
26.9	STA 727+25.0	LT/RT
	I-72 EB, AFTER BINDER	
26.0	STA 721+22.5	LT/RT
41.5	STA 722+33.3	LT/RT
49.2	STA 725+98.1	LT/RT
34.3	STA 727+95.0	LT/RT
	I-72 WB, AFTER BINDER	
27.3	STA 721+73.7	LT/RT
47.0	STA 722+17.0	LT/RT
52.4	STA 725+81.6	LT/RT
33.6	STA 726+94.7	LT/RT
1115	**TOTAL**	

40603219 POLYMERIZED HOT-MIX ASPHALT BINDER COURSE, IL-9.5FG, N90

TON	I-72 EB	OFFSET
21.9	STA. 721+22.5 - 722+33.3	RT
43.7	STA. 721+22.5 - 722+33.3	LT
42.0	STA. 725+98.1 - 727+95.0	RT
64.8	STA. 725+98.1 - 727+95.0	RT, GORE/RAMP
84.0	STA. 725+98.1 - 727+95.0	LT
	I-72 WB	
6	STA. 721+73.7 - 722+17.0	RT
11.9	STA. 721+73.7 - 722+17.0	LT
5.6	STA. 721+73.7 - 722+17.0	LT, RAMP
20	STA. 725+81.6 - 726+94.7	RT
40	STA. 725+81.6 - 726+94.7	LT
32.3	STA. 725+81.6 - 726+94.7	LT, RAMP/GORE
373	**TOTAL**	

40604164 POLYMERIZED HOT-MIX ASPHALT SURFACE COURSE, IL-9.5, MIX "D", N90

TON	I-72 EB	OFFSET
9.4	STA. 720+75.0 - 721+22.5	RT
18.7	STA. 720+75.0 - 721+22.5	LT
16.6	STA. 721+22.5 - 722+33.3	RT
33.1	STA. 721+22.5 - 722+33.3	LT
29.5	STA. 725+98.1 - 727+95.0	RT
45.4	STA. 725+98.1 - 727+95.0	RT, GORE/RAMP
58.9	STA. 725+98.1 - 727+95.0	LT
5.9	STA. 727+95.0 - 728+25.0	RT
11.5	STA. 727+95.0 - 728+25.0	RT, GORE/RAMP
11.8	STA. 727+95.0 - 728+25.0	LT
	I-72 WB	
14.5	STA. 721+00.0 - 721+73.7	RT
28.9	STA. 721+00.0 - 721+73.7	LT
12.7	STA. 721+00.0 - 721+73.7	LT, RAMP
6.5	STA. 721+73.7 - 722+17.0	RT
13	STA. 721+73.7 - 722+17.0	LT
6	STA. 721+73.7 - 722+17.0	LT, RAMP
16.9	STA. 725+81.6 - 726+94.7	RT
33.8	STA. 725+81.6 - 726+94.7	LT
27.2	STA. 725+81.6 - 726+94.7	LT, GORE/RAMP
6	STA. 726+94.7 - 727+25.0	RT
11.9	STA. 726+94.7 - 727+25.0	LT
10.1	STA. 726+94.7 - 727+25.0	LT, GORE/RAMP
429	**TOTAL**	

42000080 PAVEMENT CONNECTOR (PCC) FOR BRIDGE APPROACH SLAB

SQ YD	I-72 EB	OFFSET
117	STA. 722+33.3 - 722+55.9	LT/RT
142.1	STA. 725+74.2 - 725+98.1	LT/RT
	I-72 WB	
137.2	STA. 722+17.0 - 722+40.7	LT/RT
154.7	STA. 725+57.1 - 725+81.6	LT/RT
551	**TOTAL**	

44000100 PAVEMENT REMOVAL

SQ YD	I-72 EB FOR STAGE 1 TRAFFIC	OFFSET
719.8	STA 716+25.0 - 722+68.1	RT SHOULDER
565.3	STA 726+68.0 - 732+00.0	RT SHOULDER / GORE
	I-72 WB FOR STAGE 1 TRAFFIC	
763.3	STA 714+44.9 - 722+46.1	LT SHOULDER
914.3	STA 726+33.6 - 735+25.0	LT SHOULDER / GORE
	I-72 EB STAGE 1 CONSTRUCTION	
158.6	STA 722+33.3 - 722+85.7	LT APPROACH
152.5	STA 725+48.4 - 725+98.1	LT APPROACH
	I-72 WB STAGE 1 CONSTRUCTION	
203.4	STA 722+17.0 - 722+74.2	LT/RT APPROACH
175.8	STA 725+36.2 - 725+81.6	LT/RT APPROACH
	I-72 EB FOR STAGE 2 TRAFFIC	
299.3	STA 717+85.0 - 722+33.3	LT SHOULDER
363.8	STA 725+98.1 - 731+90.0	LT SHOULDER
	I-72 WB FOR STAGE 2 TRAFFIC	
247.2	STA 718+75.0 - 722+17.0	RT SHOULDER
363.6	STA 725+81.6 - 730+67.3	RT SHOULDER
	I-72 EB STAGE 2 CONSTRUCTION	
158.9	STA 722+33.3 - 722+89.3	LT/RT APPROACH
171.7	STA 725+52.6 - 725+98.1	LT/RT APPROACH
	I-72 WB STAGE 2 CONSTRUCTION	
173.6	STA 722+17.0 - 722+69.6	LT APPROACH
174.5	STA 725+36.2 - 725+81.6	LT APPROACH
5606	**TOTAL**	

44000157 HOT-MIX ASPHALT SURFACE REMOVAL, 2"

SQYD	I-72 EB	OFFSET
422.2	STA 720+75.0 - 722+33.3	LT
211.1	STA 720+75.0 - 722+33.3	RT
605.1	STA 725+98.1 - 728+25.0	LT
302.6	STA 725+98.1 - 728+25.0	RT
600.1	STA 725+98.1 - 728+25.0	RT, RAMP
	I-72 WB	
312.0	STA 721+00.0 - 722+17.0	LT
156.0	STA 721+00.0 - 722+17.0	RT
139.1	STA 721+00.0 - 722+17.0	LT, RAMP
382.3	STA 725+81.6 - 727+25.0	LT
191.2	STA 725+81.6 - 727+25.0	RT
387.1	STA 725+81.6 - 727+25.0	LT, RAMP
3709	**TOTAL**	

48101498 AGGREGATE SHOULDERS, TYPE B 4"

SQYD	CL I-72 EB	OFFSET
38.2	STA. 719+80.0 - 722+70.9	RT
43.3	STA. 719+22.0 - 722+63.1	LT
30.3	STA. 725+67.8 - 728+25.0	RT
31.3	STA. 725+59.2 - 728+25.0	LT
	CL I-72 WB	
15.7	STA. 721+00.0 - 722+40.7	RT
15.6	STA. 721+00.0 - 722+32.0	LT
62.7	STA. 725+51.6 - 730+67.3	RT
27.9	STA. 725+42.0 - 727+43.5	LT
265	**TOTAL**	

48203029 HOT-MIX ASPHALT SHOULDERS, 8"

SQYD	I-72 EB	OFFSET
1.0	STA. 720+01.7 - 720+08.0	RT
80.4	STA. 720+08.0 - 722+70.9	RT
1.0	STA. 719+94.0 - 720+00.0	LT
80.4	STA. 720+00.0 - 722+63.1	LT
38.8	STA. 725+67.9 - 726+94.8	RT
0.9	STA. 726+94.8 - 727+00.4	RT
38.9	STA. 725+59.2 - 726+86.3	LT
0.9	STA. 726+86.3 - 726+91.8	LT
	I-72 WB	
133.8	STA. 725+51.6 - 729+89.3	RT
1.0	STA. 729+89.3 - 729+95.3	RT
54.1	STA. 725+42.0 - 727+19.0	LT
1.0	STA. 727+19.0 - 727+25.0	LT
433	**TOTAL**	

48203100 HOT-MIX ASPHALT SHOULDERS

TON	I-72 EB	OFFSET
2.1	STA. 720+75.0 - 721+08.0	RT, BUTT JOINT
13.3	STA. 721+08.0 - 722+05.6	RT, SURFACE OVERLAY
6.3	STA. 722+05.6 - 722+33.3	RT, SURFACE & BINDER OVERLAY
2.1	STA. 720+75.0 - 721+08.0	LT, BUTT JOINT
13.3	STA. 721+08.0 - 722+05.6	LT, SURFACE OVERLAY
6.3	STA. 722+05.6 - 722+33.3	LT, SURFACE & BINDER OVERLAY
15.2	STA. 725+98.1 - 726+95.1	RT, SURFACE & BINDER OVERLAY
11.8	STA. 726+95.1 - 728+01.0	RT, SURFACE OVERLAY
1.3	STA. 728+01.0 - 728+25.0	RT, BUTT JOINT
23.3	STA. 725+98.1 - 726+95.1	LT, SURFACE & BINDER OVERLAY
15.8	STA. 726+95.1 - 728+01.0	LT, SURFACE OVERLAY
1.0	STA. 728+01.0 - 728+25.0	LT, BUTT JOINT
	I-72 WB	
1.9	STA. 721+00.0 - 721+50.0	LT, BUTT JOINT
4.4	STA. 721+50.0 - 722+17.0	LT, SURFACE OVERLAY
2.7	STA. 721+00.0 - 721+50.0	RT, BUTT JOINT
7.3	STA. 721+50.0 - 722+17.0	RT, SURFACE OVERLAY
1.3	STA. 725+81.6 - 725+91.3	LT, SURFACE & BINDER OVERLAY
8.1	STA. 725+91.3 - 727+00.0	LT, SURFACE OVERLAY
1.0	STA. 727+00.0 - 727+25.0	LT, BUTT JOINT
2.1	STA. 725+81.6 - 725+91.3	RT, SURFACE & BINDER OVERLAY
13.4	STA. 725+91.3 - 727+00.0	RT, SURFACE OVERLAY
1.6	STA. 727+00.0 - 727+25.0	RT, BUTT JOINT
156	**TOTAL**	

48300615 PORTLAND CEMENT CONCRETE SHOULDERS 11 3/4"

SQ YD	PRIOR TO STAGE 1 TRAFFIC	OFFSET
	I-72 EB	
719.8	STA. 716+25.0 - 722+68.1	RT, 10' SHLDR
565.3	STA. 726+77.9 - 732+00.0	RT, VARIABLE GORE WIDTH, 10' SHLDR
	I-72 WB	
763.3	STA. 714+44.9 - 722+46.1	LT, 10' SHLDR
914.3	STA. 726+33.6 - 735+25.0	LT, VARIABLE GORE WIDTH, 10' SHLDR
	STAGE 1 CONSTRUCTION	
	I-72 EB	
334.8	STA. 719+22.0 - 722+33.3	LT, 10' SHLDR, VARIES TO 6'
239.8	STA. 725+98.1 - 728+25.0	LT, 10' SHLDR, VARIES TO 6'
	I-72 WB	
121.2	STA. 721+00.0 - 722+17.0	RT, 10' SHLDR, VARIES TO 6'
528.5	STA. 725+81.6 - 730+67.3	RT, 10' SHLDR, VARIES TO 6'
	PRIOR TO STAGE 2 TRAFFIC	
	I-72 EB	
92.9	STA. 717+85.0 - 719+22.0	LT, 6' SHLDR
215.2	STA. 728+25.0 - 731+90.0	LT, 6' SHLDR
	I-72 WB	
152.7	STA. 718+75.0 - 721+00.0	LT, 6' SHLDR
4648	**TOTAL**	

MODEL: Schedule 5 [Sheet]
FILE NAME: P:\5XXX\52XX-53XX\5289 - PTB 201-037 D7 VV_HLR\Work Order #3\CADD Data\Sheets\D774705-sht-schedule.dgn

CDI CIVIL DESIGN, INC. WBE | DBE EFFINGHAM, IL LICENSE #184.003222

USER NAME = kulrich	DESIGNED -	REVISED -	
	DRAWN -	REVISED -	
	CHECKED -	REVISED -	
PLOT DATE = 8/21/2025	DATE -	REVISED -	

STATE OF ILLINOIS
DEPARTMENT OF TRANSPORTATION

SCHEDULE OF QUANTITIES

SCALE: | SHEET 5 OF 9 SHEETS | STA. TO STA.

F.A.I. RTE.	SECTION	COUNTY	TOTAL SHEETS	SHEET NO.
72	(58-63 HVB) BR	MACON	122	20

CONTRACT NO. 74705

ILLINOIS | FED. AID PROJECT

50105220 PIPE CULVERT REMOVAL

FOOT	IL-121	OFFSET
365.9	STA 907+26.5 - 910+92.4	RT
347.8	STA 907+74.0 - 911+21.9	LT
714	**TOTAL**	

542A1081 PIPE CULVERTS, CLASS A, TYPE 2 36"

FOOT	IL-121	OFFSET
361	STA. 907+29.4 - 910+89.5	RT
361	**TOTAL**	

542A1921 PIPE CULVERTS, CLASS A, TYPE 3 36"

FOOT	IL-121	OFFSET
343	STA. 907+76.9 - 911+19.0	LT
343	**TOTAL**	

54213681 PRECAST REINFORCED CONCRETE FLARED END SECTIONS 36"

EACH	IL-121	OFFSET
1	STA. 907+29.4	125.6' RT
1	STA. 907+76.9	67.3' LT
1	STA. 910+89.5	124.8' RT
1	STA. 911+19.0	69.3' LT
4	**TOTAL**	

55100700 STORM SEWER REMOVAL 15"

FOOT	CL I-72	OFFSET
59.9	STA 722+50.4 - 722+58.0	95.1' LT - 35.7' LT
4.2	STA 722+58.0 - 722+62.2	35.7' LT - 35.8' LT
61.0	STA 722+58.0 - 722+66.9	35.7' LT - 24.6' RT
52.9	STA 722+66.9 - 722+73.7	24.6' RT - 77.1' RT
2.3	STA 725+45.0 - 725+47.3	101.7' LT - 101.8' LT
66.9	STA 725+47.3 - 725+57.4	101.8' LT - 35.8' LT
2.7	STA 725+53.8 - 725+56.5	35.8' LT - 35.7' LT
60.7	STA 725+57.4 - 725+65.3	35.8' LT - 24.3' RT
2.5	STA 725+62.0 - 725+64.5	24.5' RT - 24.5' RT
61.2	STA 725+65.3 - 725+73.3	24.3' RT - 85.0' RT
2.6	STA 725+69.8 - 725+72.4	84.9' RT - 85.1' RT
377	**TOTAL**	

60500060 REMOVING INLETS

EACH	I-72 EB	OFFSET
1	STA 722+66.9	31.5' LT
1	STA 722+73.7	20.4' RT
1	STA 725+61.4	31.5' LT
1	STA 725+65.3	31.8' LT
1	STA 725+69.3	29.0' RT
1	STA 725+73.1	29.0' RT
	CL I-72 WB	
1	STA 722+50.4	39.8' LT
1	STA 722+58.0	20.3' RT
1	STA 722+62.2	20.2' RT
1	STA 725+44.3	45.7' LT
1	STA 725+48.0	45.8' LT
1	STA 725+53.2	20.2' RT
1	STA 725+57.4	20.1' RT
13	**TOTAL**	

63000001 STEEL PLATE BEAM GUARDRAIL, TYPE A, 6 FOOT POSTS

FOOT	I-72 EB	OFFSET
175.0	STA 720+51.2 - 722+26.2	LT
175.0	STA 720+59.0 - 722+34.0	RT
75.0	STA 725+96.1 - 726+71.1	LT
75.0	STA 726+04.8 - 726+79.7	RT
	I-72 WB	
87.5	STA 725+78.9 - 726+66.4	LT
350.0	STA 725+88.5 - 729+38.5	RT
938	**TOTAL**	

63100045 TRAFFIC BARRIER TERMINAL, TYPE 2

EACH	I-72 EB	OFFSET
1	STA 726+71.1 - 726+85.4	LT
1	STA 726+79.7 - 726+93.9	RT
2	**TOTAL**	

63100085 TRAFFIC BARRIER TERMINAL, TYPE 6

EACH	I-72 EB	OFFSET
1	STA 722+26.2 - 722+63.1	LT
1	STA 722+34.0 - 722+70.9	RT
1	STA 725+59.2 - 725+96.1	LT
1	STA 725+67.9 - 726+04.8	RT
	I-72 WB	
1	STA 725+42.0 - 725+78.9	LT
1	STA 725+51.6 - 725+88.5	RT
6	**TOTAL**	

63100167 TRAFFIC BARRIER TERMINAL, TYPE 1 (SPECIAL) TANGENT

SQYD	I-72 EB	OFFSET
1	STA 720+01.2 - 720+51.2	LT
1	STA 720+09.0 - 720+59.0	RT
	I-72 WB	
1	STA 726+66.4 - 727+16.4	LT
1	STA 729+38.5 - 729+88.5	RT
4	**TOTAL**	

63200310 GUARDRAIL REMOVAL

FOOT	I-72 EB	OFFSET
197.1	STA 720+75.2 - 722+72.1	LT
269.9	STA 720+09.5 - 722+79.4	RT
109.9	STA 725+59.3 - 726+69.1	LT
122.4	STA 725+67.8 - 726+90.0	RT
	I-72 WB	
184.9	STA 725+42.4 - 727+26.9	LT
518.6	STA 725+52.3 - 730+70.9	RT
1403	**TOTAL**	

63300575 REMOVE AND REERECT RAIL ELEMENT OF EXISTING GUARDRAIL

FOOT	I-72 EB FOR STAGE 1 TRAFFIC	OFFSET
269.9	STA 720+09.5 - 722+79.4	RT
270	**TOTAL**	

63301210 REMOVE AND REERECT STEEL PLATE BEAM GUARDRAIL, TYPE A

FOOT	STAGE 1, I-72 EB	OFFSET
135	STA 720+75 - 722+72	LT
60	STA 725+59 - 726+69	LT
	STAGE 1, I-72 WB	
457	STA 725+52 - 730+71	RT
	STAGE 2, I-72 EB	
208	STA 720+09 - 722+79	RT
72	STA 725+68 - 726+90	RT
	STAGE 2, I-72 WB	
123	STA 725+42 - 727+27	LT
1055	**TOTAL**	

63301990 REMOVE AND REERECT TRAFFIC BARRIER TERMINALS, TYPE 1

EACH	STAGE 1, I-72 EB	OFFSET
1	STA 720+75 - 722+72	LT
	STAGE 1, I-72 WB	
1	STA 725+52 - 730+71	RT
	STAGE 2, I-72 EB	
1	STA 720+09 - 722+79	RT
	STAGE 2, I-72 WB	
1	STA 725+42 - 727+27	LT
4	**TOTAL**	

63302000 REMOVE AND REERECT TRAFFIC BARRIER TERMINALS, TYPE 2

EACH	STAGE 1, I-72 EB	OFFSET
1	STA 725+59 - 726+69	LT
	STAGE 2, I-72 EB	
1	STA 725+68 - 726+90	RT
2	**TOTAL**	

63302700 REMOVE AND REERECT TRAFFIC BARRIER TERMINALS, TYPE 6

EACH	STAGE 1, I-72 EB	OFFSET
1	STA 720+75 - 722+72	LT
1	STA 725+59 - 726+69	LT
	STAGE 1, I-72 WB	
1	STA 725+52 - 730+71	RT
	STAGE 2, I-72 EB	
1	STA 720+09 - 722+79	RT
1	STA 725+68 - 726+90	RT
	STAGE 2, I-72 WB	
1	STA 725+42 - 727+27	LT
6	**TOTAL**	

64200116 SHOULDER RUMBLE STRIPS, 16 INCH

FOOT	I-72 EB	OFFSET
158.3	STA. 720+75.0 - 722+33.3	RT
311.3	STA. 719+22.0 - 722+33.3	LT
226.9	STA. 725+98.1 - 728+25.0	LT
	I-72 WB	
117	STA. 721+00.0 - 722+17.0	RT
485.7	STA. 725+81.6 - 730+67.3	RT
1300	**TOTAL**	

70400100 TEMPORARY CONCRETE BARRIER

FOOT	I-72 EB, STAGE 1	OFFSET
200	STA 718+50 - 720+50	LT
562.5	STA 720+50 - 726+12.5	LT
	I-72 WB, STAGE 1	
550	STA 722+00 - 727+50	LT
287.5	STA 727+50 - 730+36.5	LT/RT
1600	**TOTAL**	

70400200 RELOCATE TEMPORARY CONCRETE BARRIER

FOOT	I-72 EB, STAGE 2	OFFSET
200	STA 720+00.7 - 722+00	LT/RT
412.5	STA 722+00 - 716+12.5	LT
	I-72 WB, STAGE 2	
412.5	STA 722+02.5 - 726+15	LT
37.5	STA 726+15 - 726+48.6	LT
1063	**TOTAL**	

70600250 IMPACT ATTENUATORS, TEMPORARY (NON- REDIRECTIVE), TEST LEVEL 3

EACH	I-72 EB, STAGE 1	OFFSET
1	STA 718+50.7	LT
	I-72 WB, STAGE 1	
1	STA 730+36.5	RT
2	**TOTAL**	

70600350 IMPACT ATTENUATORS, RELOCATE (NON- REDIRECTIVE), TEST LEVEL 3

EACH	I-72 EB, STAGE 2	OFFSET
1	STA 720+00.7	
	I-72 WB, STAGE 2	
1	STA 726+48.6	
2	**TOTAL**	

72501000 TERMINAL MARKER - DIRECT APPLIED

EACH	I-72 EB	OFFSET
1	STA 720+01.2	LT
1	STA 720+09.0	RT
	I-72 WB	
1	STA 727+16.4	LT
1	STA 729+88.5	RT
4	**TOTAL**	

78100100 RAISED REFLECTIVE PAVEMENT MARKER

EACH	I-72 EB	OFFSET
2	STA 720+75.0 - 722+33.3	CL
3	STA 725+98.1 - 725+25.0	CL
	I-72 EB RAMP EOP	
12	STA 725+98.1 - 725+25.0	RT
	I-72 EB GORE	
4	STA 726+68.0 - 728+25.0	RT
4	STA 726+68.0 - 728+25.0	RT
	I-72 WB	
2	STA 721+00.0 - 722+17.0	CL
2	STA 721+00.0 - 722+17.0	LT
2	STA 725+81.6 - 727+25.0	CL
2	STA 725+81.6 - 727+25.0	LT
33	**TOTAL**	

Note: Raised Reflective Pavement Markers shall not be placed on new bridge deck or approach pavements.

78200005 GUARDRAIL REFLECTORS, TYPE A

EACH	I-72 EB	OFFSET
3	STA 720+01.2 - 722+63.1	LT
3	STA 720+09.0 - 722+70.9	RT
2	STA 725+59.2 - 726+85.4	LT
2	STA 725+67.9 - 726+93.9	RT
	I-72 WB	
3	STA 725+42.0 - 727+16.4	LT
6	STA 725+51.6 - 729+88.5	RT
19	**TOTAL**	

78200011 BARRIER WALL REFLECTORS, TYPE C

EACH	I-72 EB STAGE 1	OFFSET
9	STA 718+50.7 - 726+12.5	LT
	I-72 WB STAGE 1	
10	STA 722+00.0 - 730+36.5	LT/RT
	I-72 EB STAGE 2	
8	STA 720+00.7 - 726+12.5	LT/RT
	I-72 WB STAGE 2	
5	STA 722+02.5 - 726+48.6	LT
32	**TOTAL**	

78300200 RAISED REFLECTIVE PAVEMENT MARKER REMOVAL

EACH	I-72 EB, RAMP EOP	OFFSET
14	STA 725+56.5 - 728+25.0	RT, 20' SPACING
4	STA 726+77.9 - 728+25.0	RT, 40' SPACING
4	STA 726+77.9 - 728+25.0	RT, 40' SPACING
22	**TOTAL**	

X2501000 SEEDING, CLASS 2 (SPECIAL)

ACRE	I-72 EB	OFFSET
0.04	STA 719+22.0 - 722+77.1	LT
0.08	STA 719+80.0 - 723+53.7	RT
0.09	STA 725+00.3 - 728+25.0	RT
0.05	STA 725+42.3 - 728+25.0	LT
	I-72 WB	
0.03	STA 721+00.0 - 722+84.7	RT
0.07	STA 721+00.0 - 723+25.2	LT
0.07	STA 724+74.2 - 727+43.5	LT
0.05	STA 725+37.8 - 730+67.3	RT
	IL-121	
0.12	STA 908+06.3 - 910+37.3	RT
0.02	STA 908+39.9 - 910+31.8	LT
0.75	**TOTAL**	

X4400110 TEMPORARY PAVEMENT REMOVAL

SQ YD	I-72 EB	
65.7	STA. 727+75.0 - 729+97.5	LT, VARIES 2' - 4.4'
	I-72 WB	
50.8	STA. 720+19.4 - 722+46.1	LT, 2' WIDE
153.5	STA. 727+75.0 - 729+97.5	LT, VARIES 2' - 9'
270	**TOTAL**	

X6050208 FILLING EXISTING CULVERTS

CU YD	I-72 EB	OFFSET
5.3	STA 722+73.7 - 722+73.5	21.1' RT - 136.2' RT
4.7	STA 725+73.3 - 725+46.0	29.0' RT - 128.7' RT
10	**TOTAL**	

X7830050 RAISED REFLECTIVE PAVEMENT MARKER, REFLECTOR REMOVAL

EACH	I-72 EB	OFFSET
3	STA 722+87.5 - 725+49.7	CL, BRIDGE, 80' SPACING
9	STA 726+77.9 - 730+20.4	RT, GORE, 40' SPACING
9	STA 726+77.9 - 730+20.4	RT, GORE, 40' SPACING
21	**TOTAL**	

Z0049799 PROTECTING OR RESETTING SURVEY MARKERS

PT. #	Station	Offset	North	East	Description	Quantity (Each)
Dec Maint Az	725+63.54	6.17' Lt	1176213.63	795341.94	National Geodetic Survey (NGS) Monument - disk set in concrete	1
701	728+00	0	1176368.722	795520.703	IDOT centerline monument - disk set in concrete	1
					TOTAL	**2**

Z0062456 TEMPORARY PAVEMENT

SQ YD	PRIOR TO STAGE 1 TRAFFIC	OFFSET
	I-72 WB	
50.8	STA. 720+19.4 - 722+46.1	LT, 2' WIDE
153.5	STA. 728+84.6 - 731+89.7	LT, VARIES 2' - 9'
	I-72 EB	
65.7	STA. 727+75.0 - 729+97.5	LT, VARIES 2' - 4.4'
270	**TOTAL**	

PAVEMENT MARKING SCHEDULE

LOCATION	LENGTH	70107005 PAVEMENT MARKING BLACKOUT TAPE 5" FOOT	70107007 PAVEMENT MARKING BLACKOUT TAPE 7" FOOT	70107009 PAVEMENT MARKING BLACKOUT TAPE 9" FOOT	70300100 SHORT TERM PAVEMENT MARKING WHITE FOOT	70300100 SHORT TERM PAVEMENT MARKING YELLOW FOOT	70300150 SHORT TERM PAVEMENT MARKING REMOVAL SQ FT	70300221 TEMPORARY PAVEMENT MARKING LINE 4" - PAINT WHITE FOOT	70300221 TEMPORARY PAVEMENT MARKING LINE 4" - PAINT YELLOW FOOT	70300241 TEMP. PAVEMENT MARKING LINE 6" - PAINT WHITE FOOT	70300251 TEMP. PAVEMENT MARKING LINE 8" - PAINT WHITE FOOT	78004630 PREFORMED PLASTIC PAVEMENT MARKING, TYPE D - STANDARD LINE 6" WHITE FOOT	78004630 PREFORMED PLASTIC PAVEMENT MARKING, TYPE D - STANDARD LINE 6" YELLOW FOOT	78004640 PREFORMED PLASTIC PAVEMENT MARKING, TYPE D - STANDARD LINE 8" WHITE FOOT	78011035 GROOVING FOR RECESSED PAVEMENT MARKING, 7" FOOT	78011045 GROOVING FOR RECESSED PAVEMENT MARKING, 9" FOOT	78300202 PAVEMENT MARKING REMOVAL WATER BLASTING SQ FT	X7810400 TEMPORARY RAISED PAVEMENT MARKER EACH
I-72 EB (EXISTING)																		
STA. 716+50 - 720+75	425	425.0	110.0															
STA. 720+75 - 728+25	750																479.0	
STA. 728+25 - 730+00	175	175.0	40.0	176.0														
STA. 730+00 - 731+75	175	175.0	40.0	21.0														
I-72 WB (EXISTING)																		
STA. 714+70 - 715+00	30	30.0	10.0															
STA. 715+00 - 721+00	600	600.2	172.0															
STA. 721+00 - 727+25	625																397.4	
STA. 727+25 - 730+00	275	185.8		309.3														
STA. 730+00 - 738+00	800	500.0	180.0															
I-72 EB (STAGE 1)																		
STA. 716+50 - 730+00	1350						469.5	2625.3	1350.0								1325.1	69
STA. 730+00 - 731+75	175						112.0	370.6	175.0								181.9	21
I-72 WB (STAGE 1)																		
STA. 714+70 - 715+00	30						18.3	60.0	30.0								30.0	3
STA. 715+00 - 730+00	1500						659.9	3066.0	1500.0								1522.0	90
STA. 730+00 - 744+00	1400						313.3	1000.0	1400.0								800.0	63
I-72 EB (STAGE 2)																		
STA. 713+75 - 715+00	125	125.0	30.0				69.6	250.0	125.0								125.0	15
STA. 715+00 - 730+00	1500	750.0	150.0	265.9			599.4	3448.7	1500.0								1649.6	105
STA. 730+00 - 735+75	575	575.0	110.0				303.8	1192.5	575.0								589.2	72
I-72 WB (STAGE 2)																		
STA. 719+00 - 730+00	1100	475.0	120.0	208.3			424.1	2550.2	1100.0								1216.8	60
STA. 730+00 - 730+50	50	50.0	10.0				26.7	100.0	50.0								50.0	6
I-72 EB (STAGE 3)																		
STA. 713+75 - 715+00	125	125.0	30.0				69.6	250.0	125.0								125.0	15
STA. 715+00 - 730+00	1500	750.0	180.0				417.5	3000.0	1500.0								1500.0	90
STA. 730+00 - 735+00	500	500.0	130.0				284.2	1000.0	500.0								500.0	63
I-72 WB (STAGE 3)																		
STA. 718+09 - 730+00	1191							1351.0	625.0								658.7	
STA. 730+00 - 740+00	1000							1000.0									333.4	
I-72 EB																		
STA. 720+75 - 721+50	75				32.0		8.0	75.0	75.0	20.0		95.0	75.0		170.0		60.0	
STA. 721+50 - 727+50	600				592.0	48.0	160.0	696.5	600.0	150.0	164.1	846.5	600.0	164.1	1446.5	164.1	616.5	
STA. 727+50 - 728+25	75				80.0		20.0	75.1	75.0	20.0	150.1	95.1	75.0	150.1	170.1	150.1	160.1	
I-72 WB																		
STA. 721+00 - 721+50	50				80.0		20.0	62.0	50.0	20.0		82.0	50.0		132.0		47.3	
STA. 721+50 - 727+25	575				864.0	48.0	228.0	699.1	575.0	280.0	164.9	980.0	575.0	164.9	1555.0	164.9	674.6	
TOTAL		**5441**	**1312**	**981**	**1648**	**96**	**4204**	**22872**	**11930**	**490**	**480**	**2099**	**1375**	**480**	**3474**	**480**	**13042**	**672**

MODEL: Schedule 9 [Sheet]
FILE NAME: P:\5XXX\52XX-53XX\5289 - PTB 201-037 D7 VV_HLR\Work Order #3\CADD Data\Sheets\D774705-sht-schedule.dgn

CDI CIVIL DESIGN, INC. WBE | DBE EFFINGHAM, IL LICENSE #184.003222

USER NAME = kulrich	DESIGNED -	REVISED -
	DRAWN -	REVISED -
	CHECKED -	REVISED -
PLOT DATE = 8/21/2025	DATE -	REVISED -

STATE OF ILLINOIS
DEPARTMENT OF TRANSPORTATION

SCHEDULE OF QUANTITIES

SCALE: | SHEET 9 OF 9 SHEETS | STA. TO STA.

F.A.I. RTE.	SECTION	COUNTY	TOTAL SHEETS	SHEET NO.
72	(58-63 HVB) BR	MACON	122	24

CONTRACT NO. 74705

ILLINOIS | FED. AID PROJECT

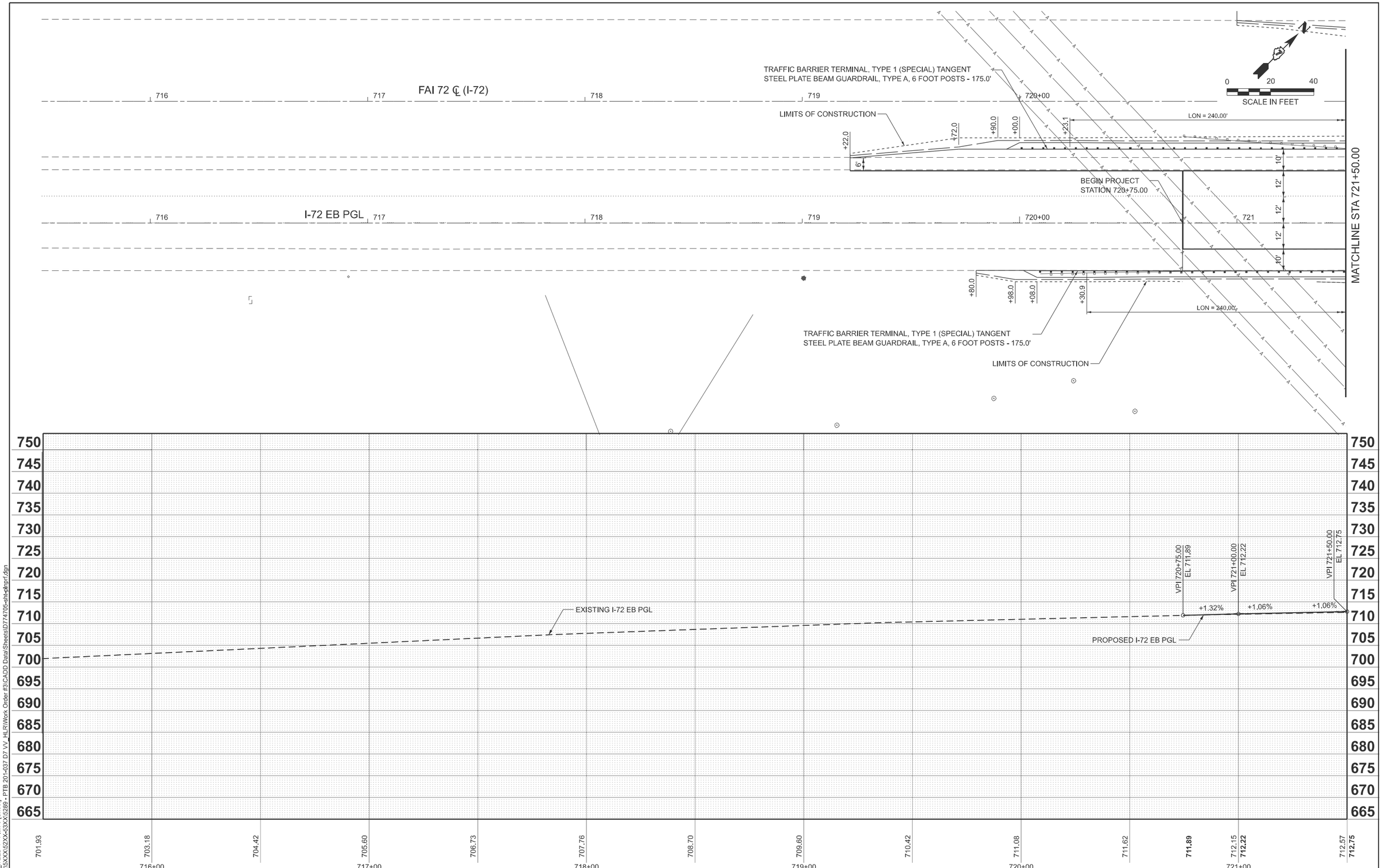

MODEL: ExCL_I72EB-1 - Plan 0 [Sheet]
FILE NAME: P:\5XXX\52XX-53XX\5289 - PTB 201-037 D7 VV_HLR\Work Order #3\CADD Data\Sheets\D774705-sht-plnprf.dgn

CDI
CIVIL DESIGN, INC.
WBE | DBE
EFFINGHAM, IL
LICENSE #184.003222

USER NAME = kulrich	DESIGNED -	REVISED -
	DRAWN -	REVISED -
	CHECKED -	REVISED -
PLOT DATE = 8/21/2025	DATE -	REVISED -

STATE OF ILLINOIS
DEPARTMENT OF TRANSPORTATION

PLAN & PROFILE
I-72 EAST BOUND

SCALE: 1"=20' | SHEET 1 OF 5 SHEETS | STA. 715+50.00 TO STA. 721+50.00

F.A.I. RTE.	SECTION	COUNTY	TOTAL SHEETS	SHEET NO.
72	(58-63 HVB) BR	MACON	122	25

CONTRACT NO. 74705

ILLINOIS | FED. AID PROJECT

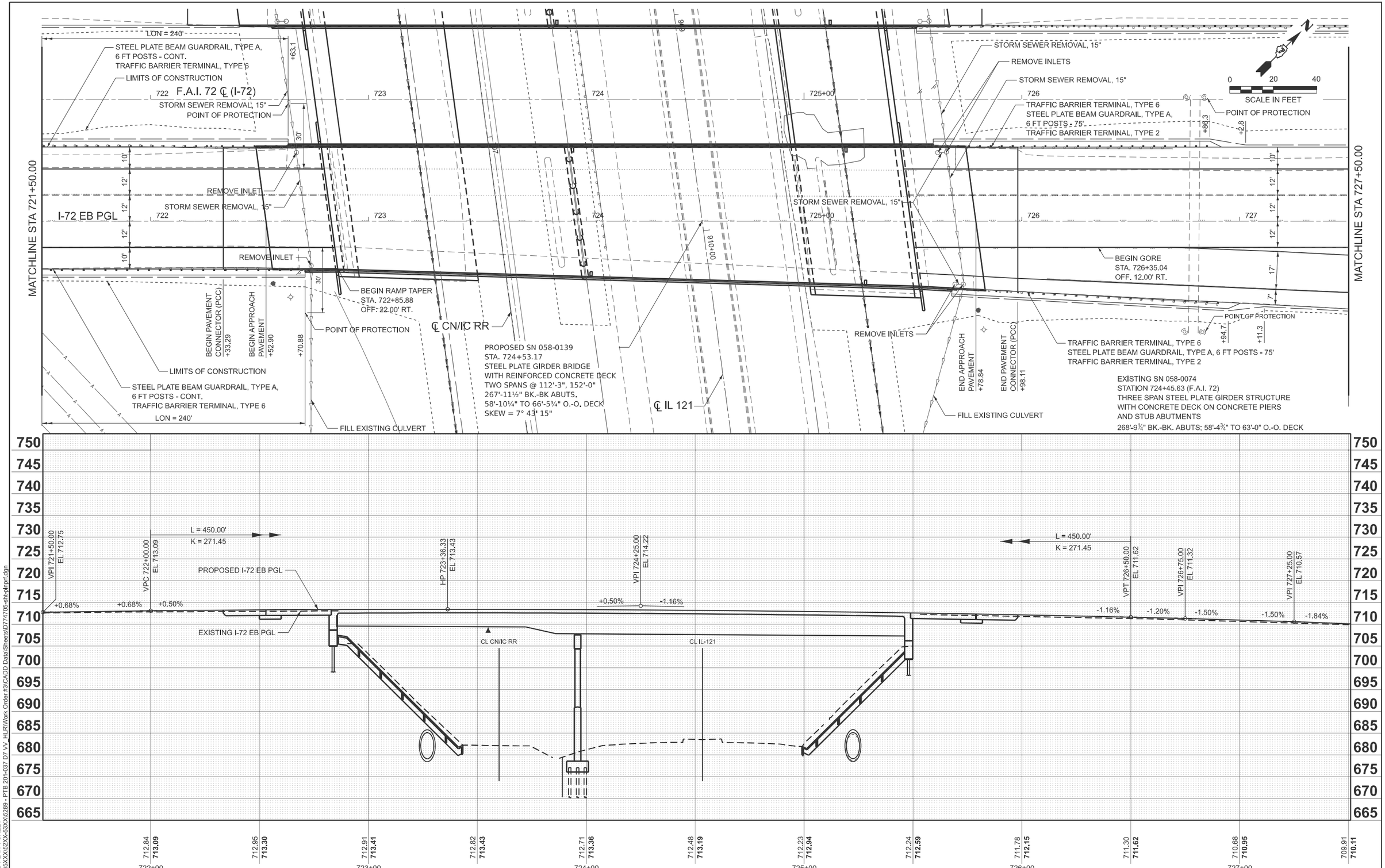

MODEL: I 72 EB PLAN 1 SHEET
FILE NAME: P:\5XXX\52XX-53XX\5289 - PTB 201-037 D7 VV_HLR\Work Order #3\CADD Data\Sheets\D774705-sht-pnprf.dgn

CDI CIVIL DESIGN, INC. WBE | DBE EFFINGHAM, IL LICENSE #184.003222

USER NAME = kulrich	DESIGNED -	REVISED -
	DRAWN -	REVISED -
	CHECKED -	REVISED -
PLOT DATE = 8/21/2025	DATE -	REVISED -

STATE OF ILLINOIS
DEPARTMENT OF TRANSPORTATION

PLAN & PROFILE
I-72 EAST BOUND

SCALE:1"=20' | SHEET 2 OF 5 SHEETS | STA. 721+50.00 TO STA. 727+50.00

F.A.I. RTE.	SECTION	COUNTY	TOTAL SHEETS	SHEET NO.
72	(58-63 HVB) BR	MACON	122	26

CONTRACT NO. 74705

ILLINOIS | FED. AID PROJECT

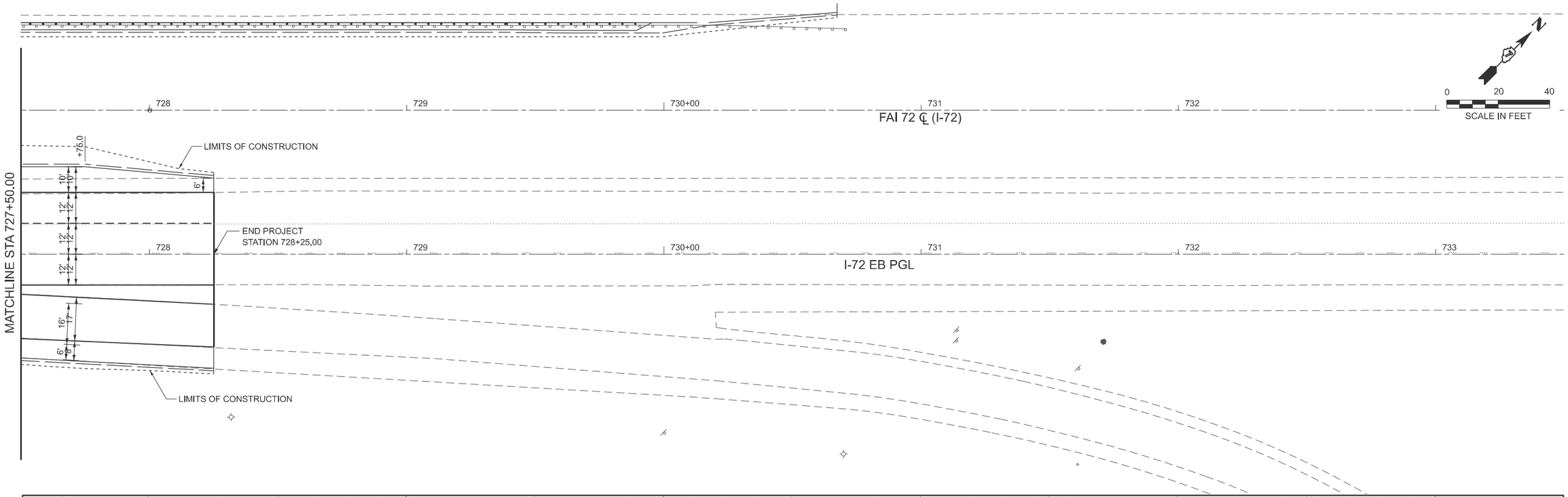

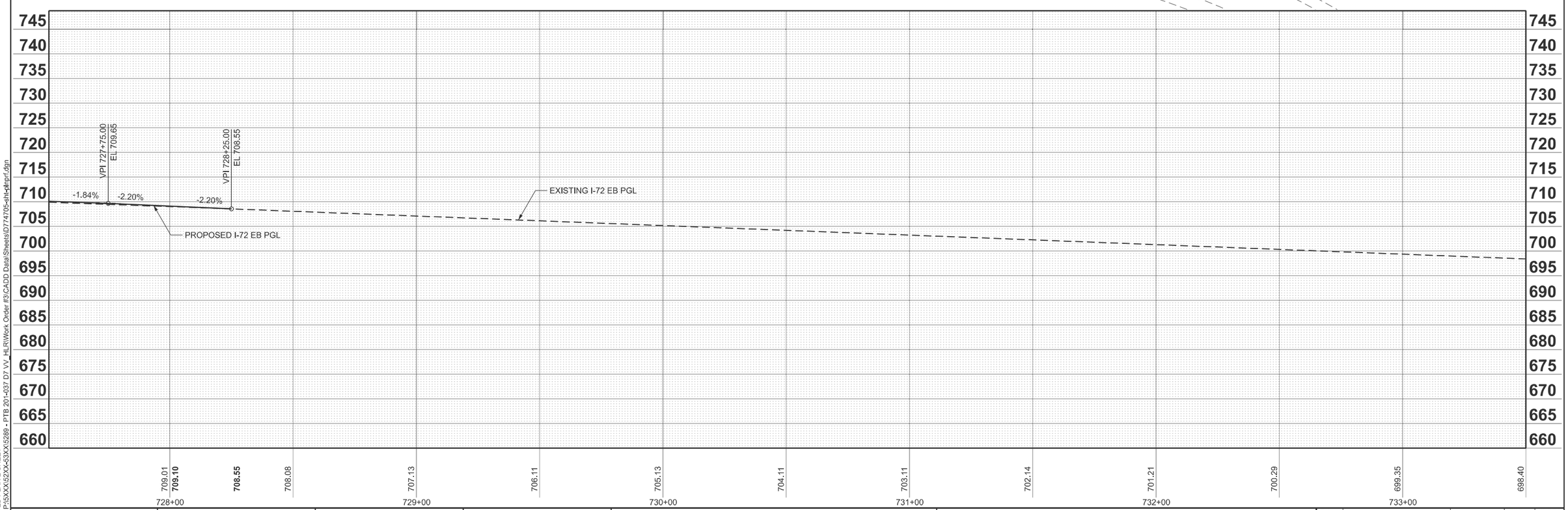

MODEL: I 72 EB PLAN 2 SHEET
FILE NAME: P:\5XXX\52XX-53XX\5289 - PTB 201-037 D7 VV_HLR\Work Order #3\CADD Data\Sheets\D774705-sht-pfnprf.dgn

CIVIL DESIGN, INC.
WBE | DBE
EFFINGHAM, IL
LICENSE #184.003222

USER NAME = kulrich	DESIGNED -	REVISED -
	DRAWN -	REVISED -
	CHECKED -	REVISED -
PLOT DATE = 8/21/2025	DATE -	REVISED -

STATE OF ILLINOIS
DEPARTMENT OF TRANSPORTATION

PLAN & PROFILE
I-72 EAST BOUND

SCALE:1"=20' | SHEET 3 OF 5 SHEETS | STA. 727+50.00 TO STA. 733+50.00

F.A.I. RTE.	SECTION	COUNTY	TOTAL SHEETS	SHEET NO.
72	(58-63 HVB) BR	MACON	122	27
		CONTRACT NO. 74705		
		ILLINOIS	FED. AID PROJECT	

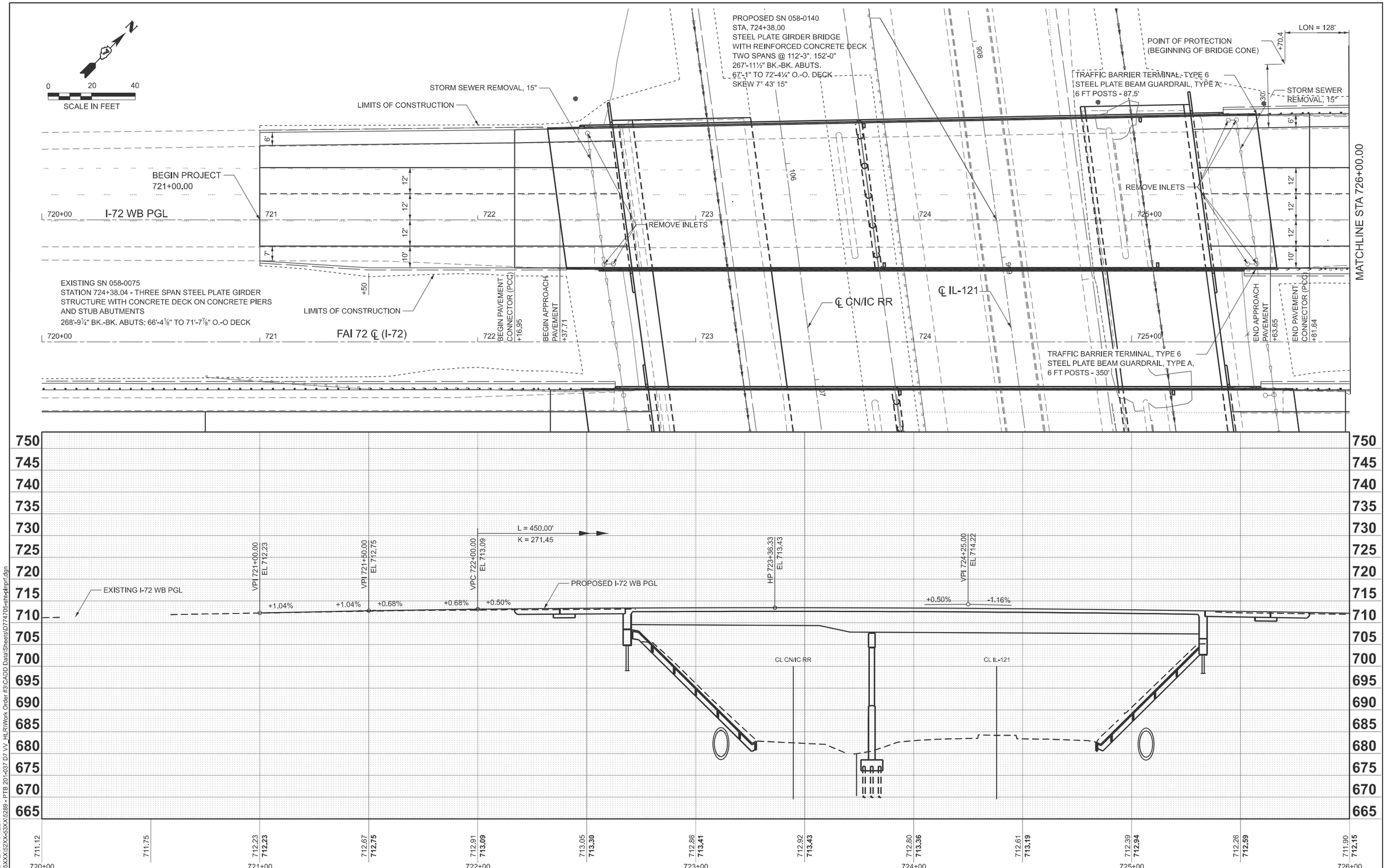

MODEL: I72 WB PLAN 1 SHEET
FILE NAME: P:\5XXX\52XX-53XX\5289 - PTB 201-037 D7 VV_HLR\Work Order #3\CADD Data\Sheets\D774705-sht-pltnprf.dgn

CDI CIVIL DESIGN, INC. WBE | DBE EFFINGHAM, IL LICENSE #184.003222

USER NAME = kulrich	DESIGNED -	REVISED -	
	DRAWN -	REVISED -	
	CHECKED -	REVISED -	
PLOT DATE = 8/21/2025	DATE -	REVISED -	

STATE OF ILLINOIS
DEPARTMENT OF TRANSPORTATION

PLAN & PROFILE
I-72 WEST BOUND

SCALE:1"=20' | SHEET 4 OF 5 SHEETS | STA. 720+00.00 TO STA. 726+00.00

F.A.I. RTE.	SECTION	COUNTY	TOTAL SHEETS	SHEET NO.
72	(58-63 HVB) BR	MACON	122	28
		CONTRACT NO. 74705		
		ILLINOIS	FED. AID PROJECT	

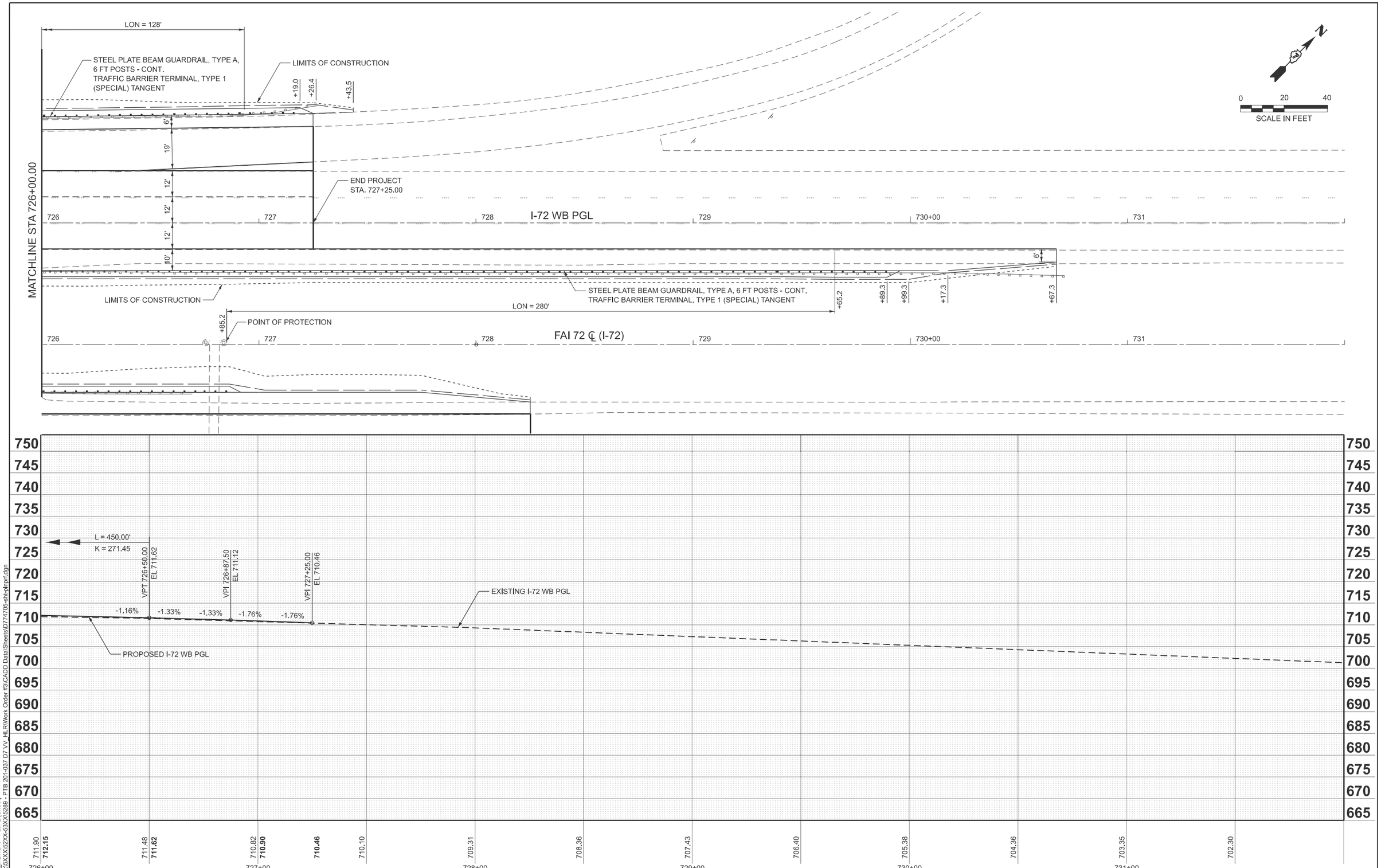

MODEL: ExCL_I72WB-1 - Plan 2 [Sheet]
FILE NAME: P:\5XXX\52XX-53XX\5289 - PTB 201-037 D7 VV_HLR\Work Order #3\CADD Data\Sheets\D774705-sht-pfnprf.dgn

CDI
CIVIL DESIGN, INC.
WBE | DBE
EFFINGHAM, IL
LICENSE #184.003222

USER NAME = kulrich	DESIGNED -	REVISED -	
	DRAWN -	REVISED -	
	CHECKED -	REVISED -	
PLOT DATE = 8/21/2025	DATE -	REVISED -	

STATE OF ILLINOIS
DEPARTMENT OF TRANSPORTATION

PLAN & PROFILE
I-72 WEST BOUND

SCALE: 1"=20' | SHEET 5 OF 5 SHEETS | STA. 726+00.00 TO STA. 732+00.00

F.A.I. RTE.	SECTION	COUNTY	TOTAL SHEETS	SHEET NO.
72	(58-63 HVB) BR	MACON	122	29

CONTRACT NO. 74705

ILLINOIS | FED. AID PROJECT

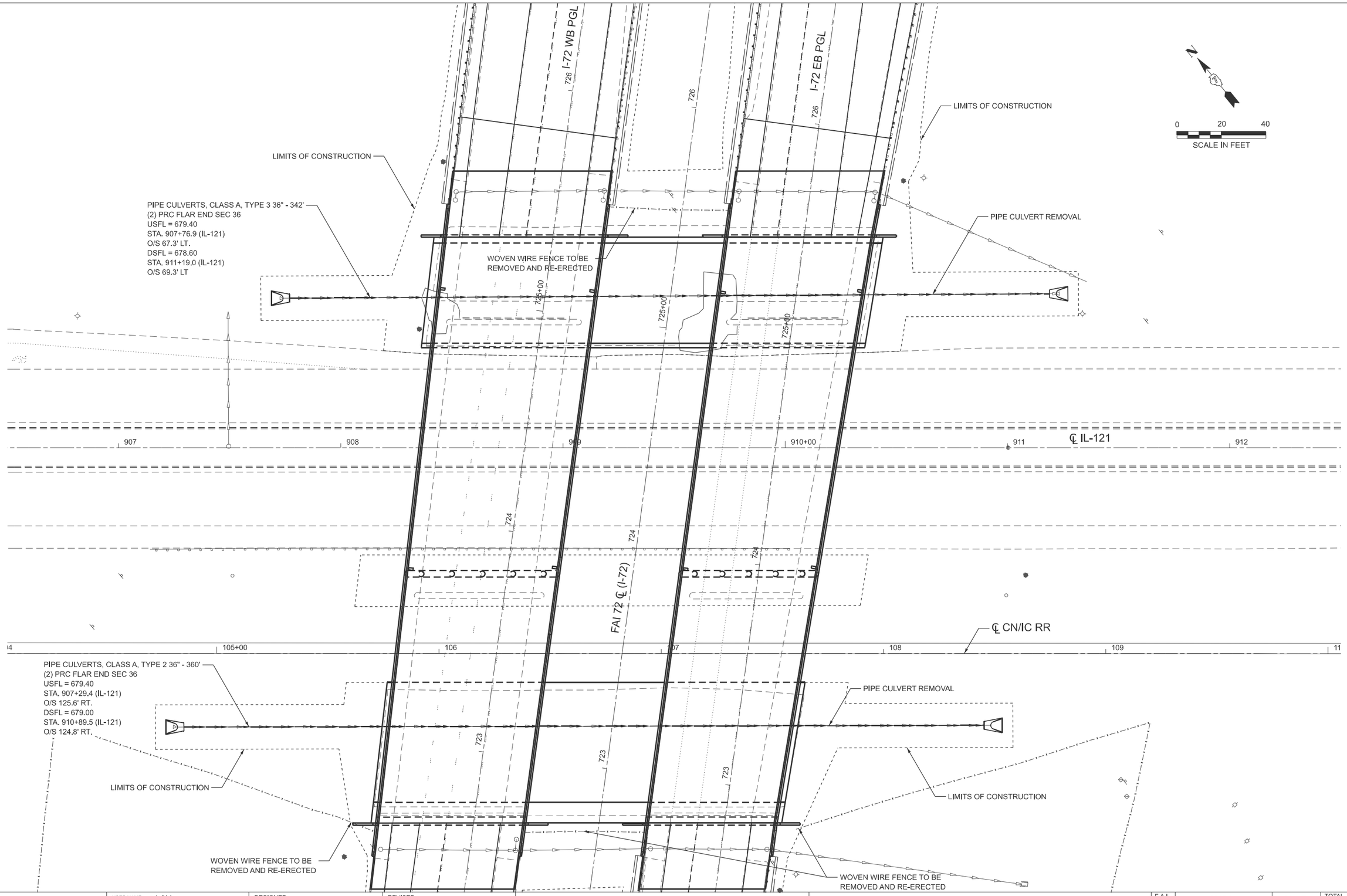

MODEL: ExCL_IL121 - culvert plnprf [Sheet]
FILE NAME: P:\5XXX\52XX-53XX\5289 - PTB 201-037 D7 VV_HLR\Work Order #3\CADD Data\Sheets\D774705-sht-plnprf-culverts.dgn

CDI
CIVIL DESIGN, INC.
WBE | DBE
EFFINGHAM, IL
LICENSE #184.003222

USER NAME = kulrich	DESIGNED -	REVISED -	
	DRAWN -	REVISED -	
	CHECKED -	REVISED -	
PLOT DATE = 8/20/2025	DATE -	REVISED -	

STATE OF ILLINOIS
DEPARTMENT OF TRANSPORTATION

DRAINAGE PLAN
CULVERT REPLACEMENT

SCALE: 1"=20' | SHEET 1 OF 1 SHEETS | STA. 906+50.00 TO STA. 912+50.00

F.A.I. RTE.	SECTION	COUNTY	TOTAL SHEETS	SHEET NO.
72	(58-63 HVB) BR	MACON	122	30
		CONTRACT NO. 74705		
		ILLINOIS	FED. AID PROJECT	

SUGGESTED STAGE I CONSTRUCTION:

1. CONSTRUCT PCC SHOULDERS AND TEMPORARY PAVEMENT AT SHOULDER AND GORE LOCATIONS AS SHOWN ON STAGE 1 PLANS. REMOVE AND RE-ERECT RAIL ELEMENT OF EXISTING GUARDRAIL AS NECESSARY TO CONSTRUCT PCC SHOULDERS. UTILIZE TRAFFIC CONTROL AND PROTECTION STANDARD 701401.

2. PLACE TEMPORARY TRAFFIC CONTROL AND TEMPORARY CONCRETE BARRIER AS SHOWN ON STAGE I PLANS AND ADVANCED SIGNING DETAILS.

3. CONSTRUCT THE INSIDE EASTBOUND AND INSIDE WESTBOUND PCC SHOULDERS AND TEMPORARY PAVEMENT, APPROACH AND CONNECTOR PAVEMENTS, AND BRIDGE STRUCTURES. REMOVE AND RE-ERECT EXISTING GUARDRAILAS NECESSARY TO CONSTRUCT PCC SHOULDERS.

SUGGESTED STAGE I NOTES:

1. MAINTAIN TWO LANES OF TRAFFIC FOR EASTBOUND AND WESTBOUND TRAFFIC ON I-72 AT ALL TIMES.

2. EMERGENCY ACCESS SHALL BE PROVIDED AT ALL TIMES.

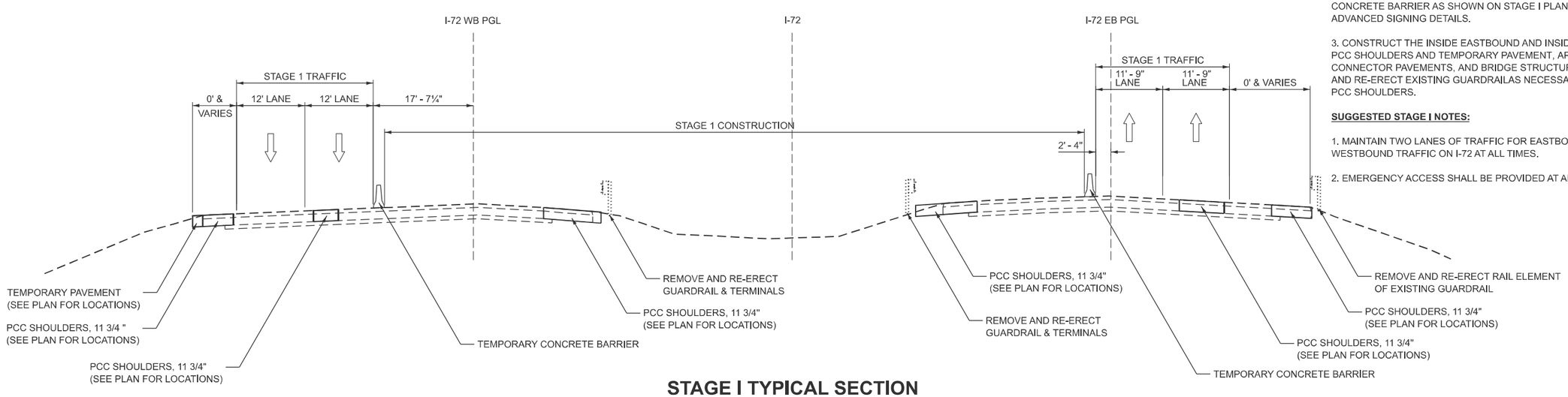

STAGE I TYPICAL SECTION

SUGGESTED STAGE II CONSTRUCTION:

1. PLACE TEMPORARY TRAFFIC CONTROL AND TEMPORARY CONCRETE BARRIER AS SHOWN ON STAGE II PLANS AND ADVANCED SIGNING DETAILS.

2. CONSTRUCT THE OUTSIDE EASTBOUND AND OUTSIDE WESTBOUND APPROACH AND CONNECTOR PAVEMENTS AND BRIDGE STRUCTURES. REMOVE AND RE-ERECT EXISTING GUARDRAIL AS NECESSARY.

SUGGESTED STAGE II NOTES:

1. MAINTAIN TWO LANES OF TRAFFIC FOR EASTBOUND AND WESTBOUND TRAFFIC ON I-72 AT ALL TIMES.

2. EMERGENCY ACCESS SHALL BE PROVIDED AT ALL TIMES.

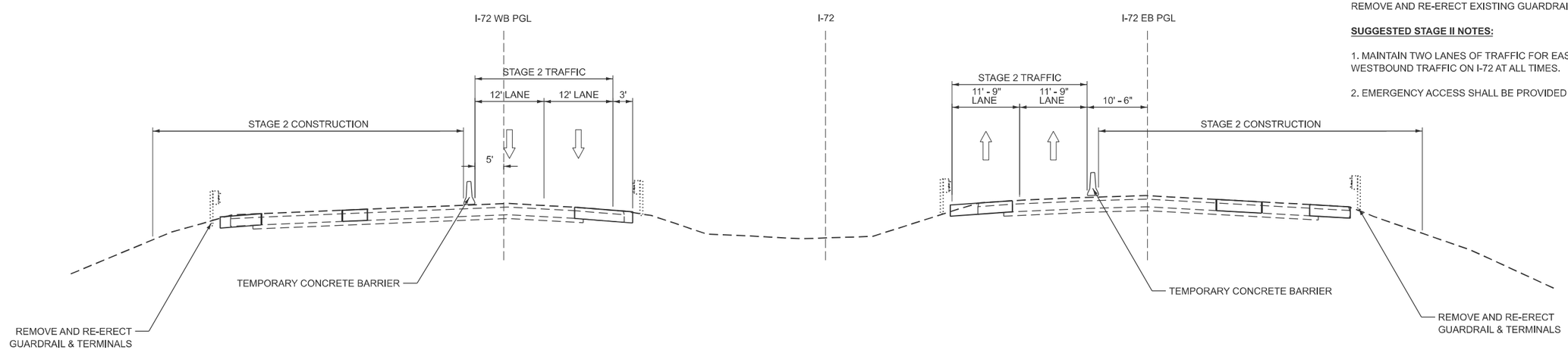

STAGE II TYPICAL SECTION

MODEL: Typical Sections EB-1 [Sheet]
FILE NAME: P:\5XXX\52XX-53XX\5289 - PTB 201-037 D7 VV_HLR\Work Order #3\CADD Data\Sheets\D774705-sht-staging_typicals.dgn

CDI CIVIL DESIGN, INC. WBE | DBE EFFINGHAM, IL LICENSE #184.003222	USER NAME = kulrich	DESIGNED -	REVISED -	STATE OF ILLINOIS DEPARTMENT OF TRANSPORTATION	STAGING PLAN TYPICAL SECTIONS	F.A.I. RTE.	SECTION	COUNTY	TOTAL SHEETS / SHEET NO.
		DRAWN -	REVISED -			72	(58-63 HVB) BR	MACON	122 / 31
		CHECKED -	REVISED -					CONTRACT NO. 74705	
	PLOT DATE = 8/20/2025	DATE -	REVISED -		SCALE: SHEET 1 OF 6 SHEETS STA. TO STA.		ILLINOIS	FED. AID PROJECT	

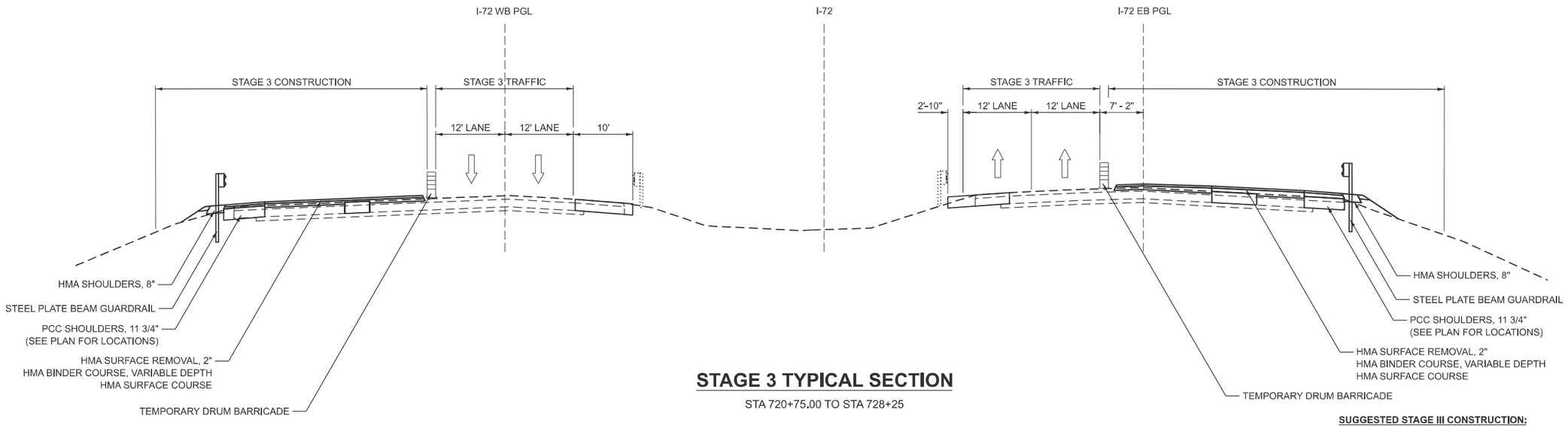

STAGE 3 TYPICAL SECTION

STA 720+75.00 TO STA 728+25

SUGGESTED STAGE III CONSTRUCTION:

1. CLOSE EASTBOUND EXIT RAMP AND WESTBOUND ENTRANCE RAMP, SIGNING PER ENTRANCE RAMP CLOSURE STD 701451.

2. REMOVE TEMPORARY CONCRETE BARRIER FROM STAGE 2 AND PLACE BARRELS ALONG RAMP LANE.

3. MILL AND OVERLAY OUTSIDE EASTBOUND PAVEMENT AND SHOULDERS. REMOVE EXISTING GUARDRAIL, CONSTRUCT SHOULDER STABILIZATION FOR GUARDRAIL, AND INSTALL NEW GUARDRAIL AND TERMINALS.

4. MILL AND OVERLAY OUTSIDE WESTBOUND PAVEMENT AND SHOULDERS. REMOVE EXISTING GUARDRAIL, CONSTRUCT SHOULDER STABILIZATION FOR GUARDRAIL, AND INSTALL NEW GUARDRAIL AND TERMINALS.

5. UNDER CORRESPONDING TRAFFIC CONTROL STANDARDS, MILL AND OVERLAY INSIDE PAVEMENT AND SHOULDERS, REMOVE EXISTING GUARDRAIL, CONSTRUCT SHOULDER STABILIZATION FOR GUARDRAIL, AND INSTALL NEW GUARDRAIL AND TERMINALS.

SUGGESTED STAGE III NOTES:

1. MAINTAIN TWO LANES OF TRAFFIC FOR EASTBOUND AND WESTBOUND TRAFFIC ON I-72 AT ALL TIMES.

2. EMERGENCY ACCESS SHALL BE PROVIDED AT ALL TIMES.

WESTBOUND ADVANCED SIGNING

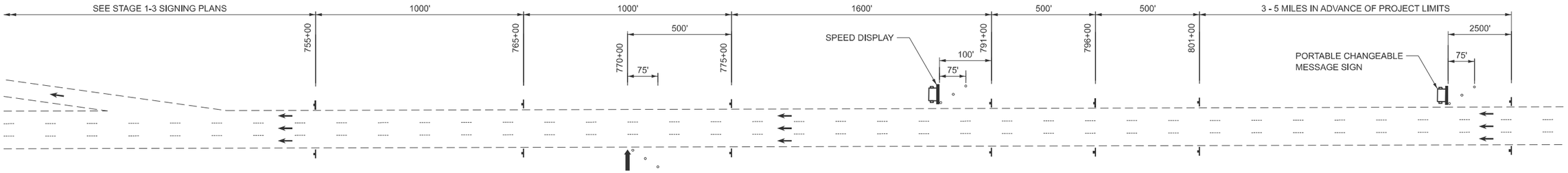

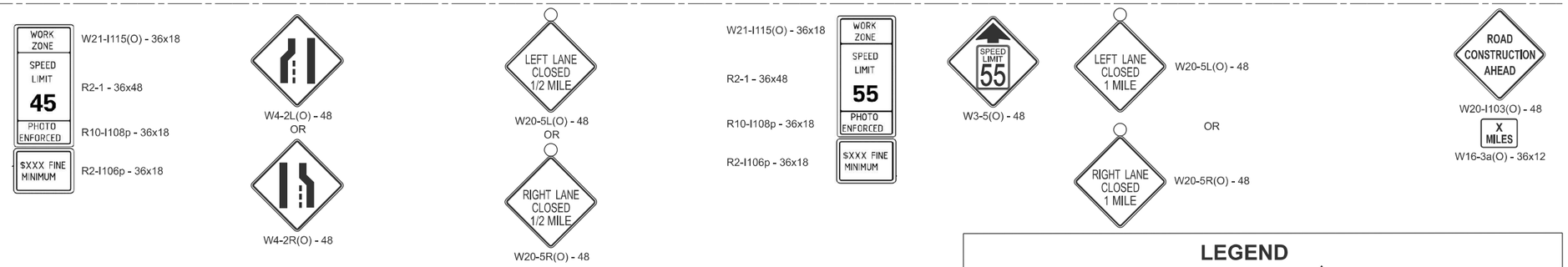

LEGEND

	TEMPORARY DRUM BARRICADE		ARROW BOARD
OR	TEMPORARY PAVEMENT MARKING		IMPACT ATTENUATOR
	TEMPORARY CONCRETE BARRIER		DIRECTION OF TRAFFIC
	WORK ZONE		TRAILER MOUNTED SIGN
	TEMPORARY PAVEMENT		

EASTBOUND ADVANCED SIGNING

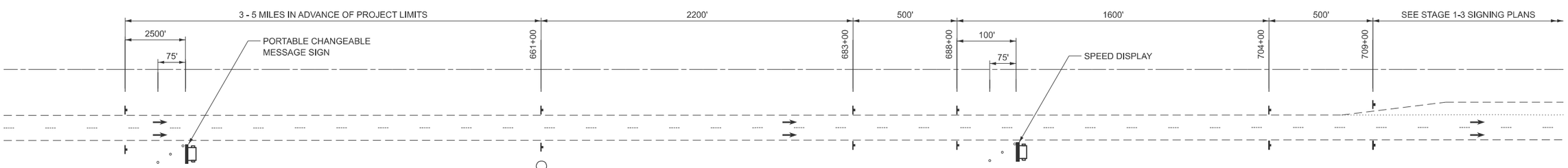

MODEL: Advanced Signing Detail [Sheet]
FILE NAME: P:\5XXX\52XX-53XX\5289 - PTB 201-037 D7 VV_HLR\Work Order #3\CADD Data\Sheets\D774705-sht-staging-advsigning.dgn

CDI CIVIL DESIGN, INC. WBE | DBE EFFINGHAM, IL LICENSE #184.003222

USER NAME = kulrich	DESIGNED -	REVISED -
	DRAWN -	REVISED -
	CHECKED -	REVISED -
PLOT DATE = 8/20/2025	DATE -	REVISED -

STATE OF ILLINOIS
DEPARTMENT OF TRANSPORTATION

STAGING PLAN
ADVANCED SIGNING

SCALE: | SHEET 3 OF 6 SHEETS | STA. | TO STA.

F.A.I. RTE.	SECTION	COUNTY	TOTAL SHEETS	SHEET NO.
72	(58-63 HVB) BR	MACON	122	33

CONTRACT NO. 74705

ILLINOIS | FED. AID PROJECT

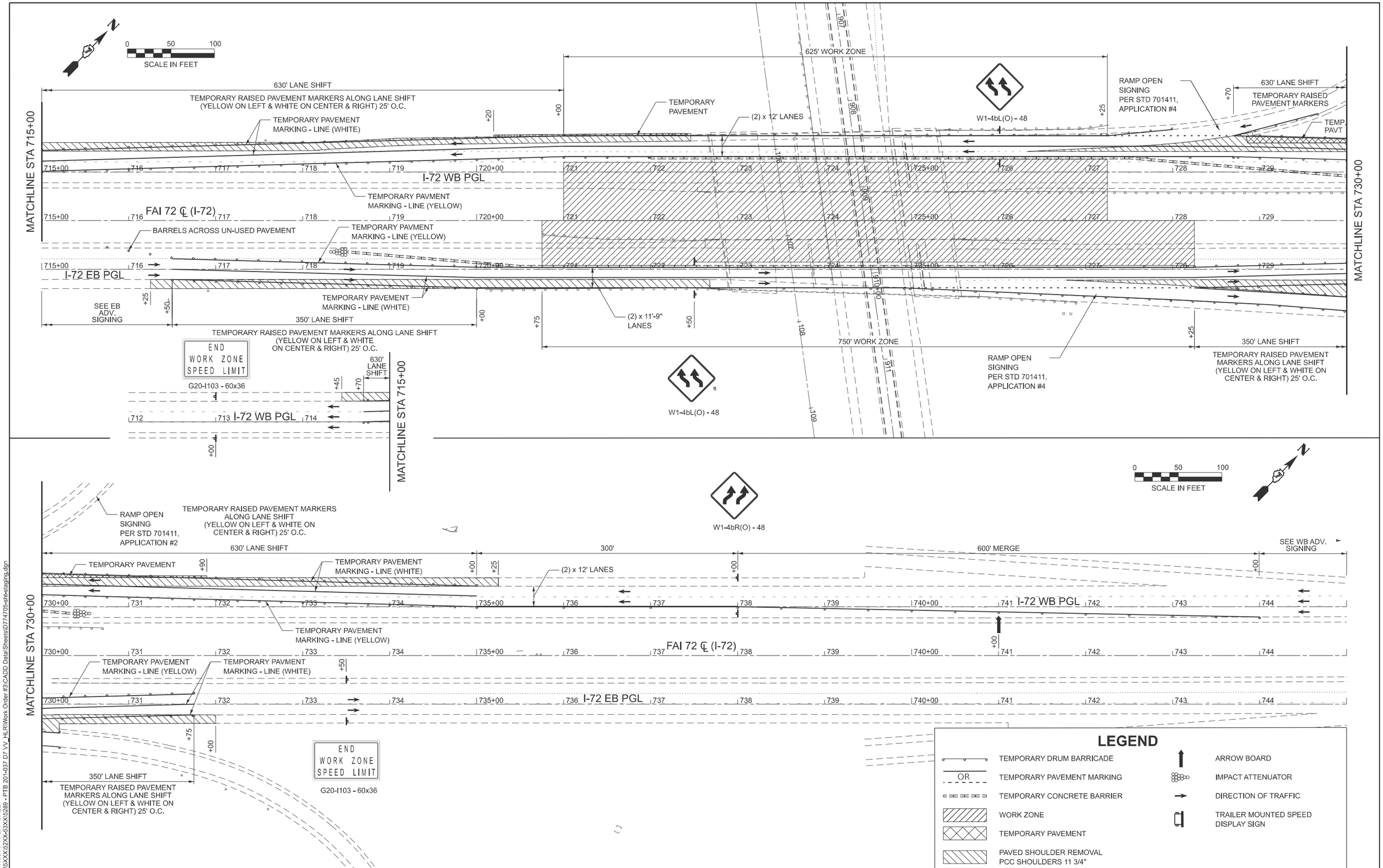

MODEL: I 72 STAGING 1 PLAN SHEET
FILE NAME: P:\5XXX\52XX-53XX\5289 - PTB 201-037 D7 VV_HLR\Work Order #3\CADD Data\Sheets\D774705-sht-staging.dgn

CDI CIVIL DESIGN, INC. WBE | DBE EFFINGHAM, IL LICENSE #184.003222

USER NAME = kulrich	DESIGNED -	REVISED -
	DRAWN -	REVISED -
	CHECKED -	REVISED -
PLOT DATE = 8/20/2025	DATE -	REVISED -

STATE OF ILLINOIS
DEPARTMENT OF TRANSPORTATION

STAGING PLAN
STAGE 1 TRAFFIC

SCALE: 1"=50' | SHEET 4 OF 6 SHEETS | STA. 715+00.00 TO STA. 745+00.00

F.A.I. RTE.	SECTION	COUNTY	TOTAL SHEETS	SHEET NO.
72	(58-63 HVB) BR	MACON	122	34

CONTRACT NO. 74705

ILLINOIS | FED. AID PROJECT

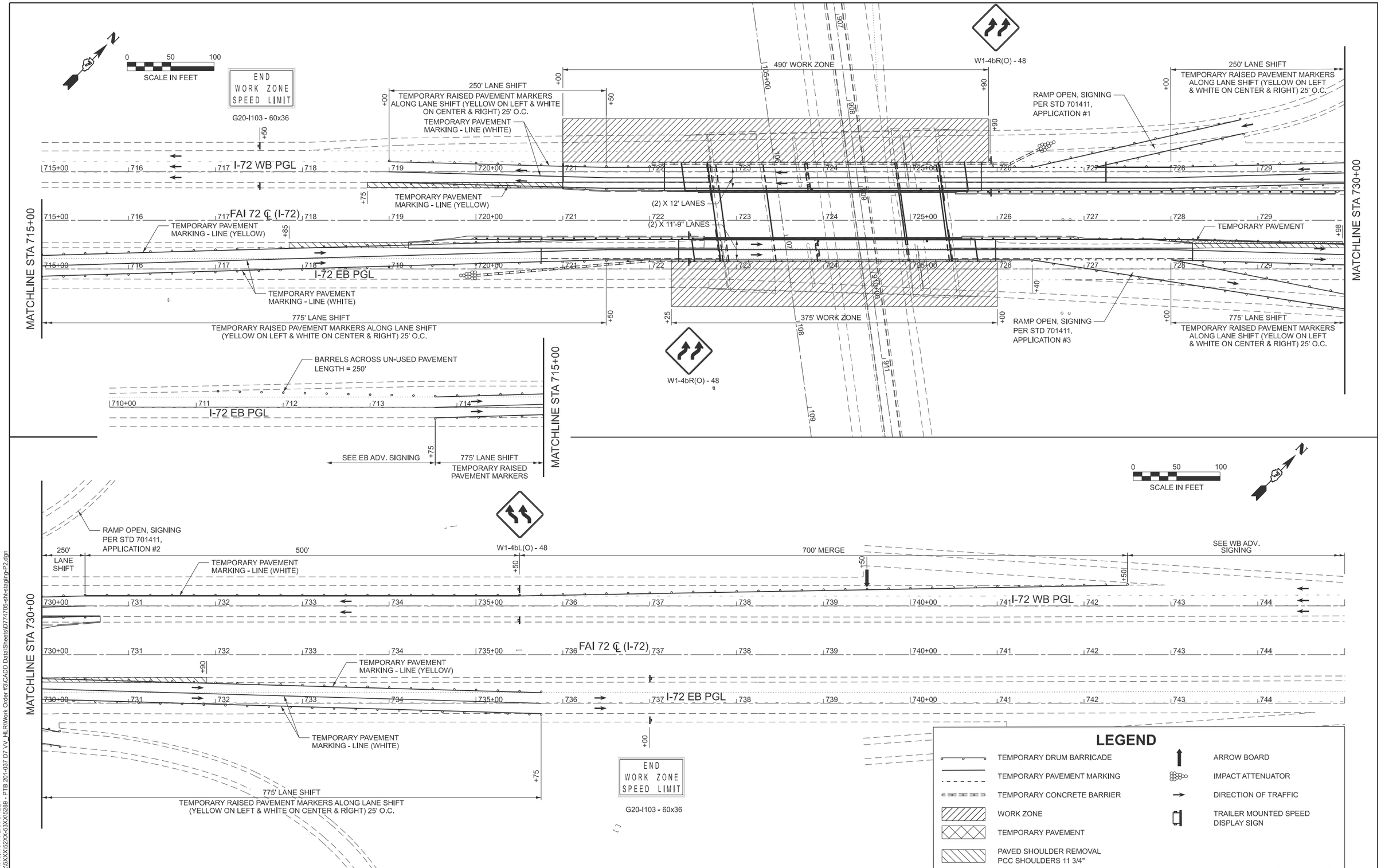

MODEL: I72 STAGING 1 PLAN SHEET
FILE NAME: P:\5XXX\52XX-53XX\5289 - PTB 201-037 D7 VV_HLR\Work Order #3\CADD Data\Sheets\D774705-sht-staging-P2.dgn

CDI — CIVIL DESIGN, INC. WBE | DBE — EFFINGHAM, IL — LICENSE #184.003222

USER NAME = kulrich	DESIGNED -	REVISED -
	DRAWN -	REVISED -
	CHECKED -	REVISED -
PLOT DATE = 8/20/2025	DATE -	REVISED -

STATE OF ILLINOIS
DEPARTMENT OF TRANSPORTATION

STAGING PLAN
STAGE 2 TRAFFIC

SCALE: 1"=50' | SHEET 5 OF 6 SHEETS | STA. 715+00.00 TO STA. 745+00.00

F.A.I. RTE.	SECTION	COUNTY	TOTAL SHEETS	SHEET NO.
72	(58-63 HVB) BR	MACON	122	35

CONTRACT NO. 74705

ILLINOIS | FED. AID PROJECT

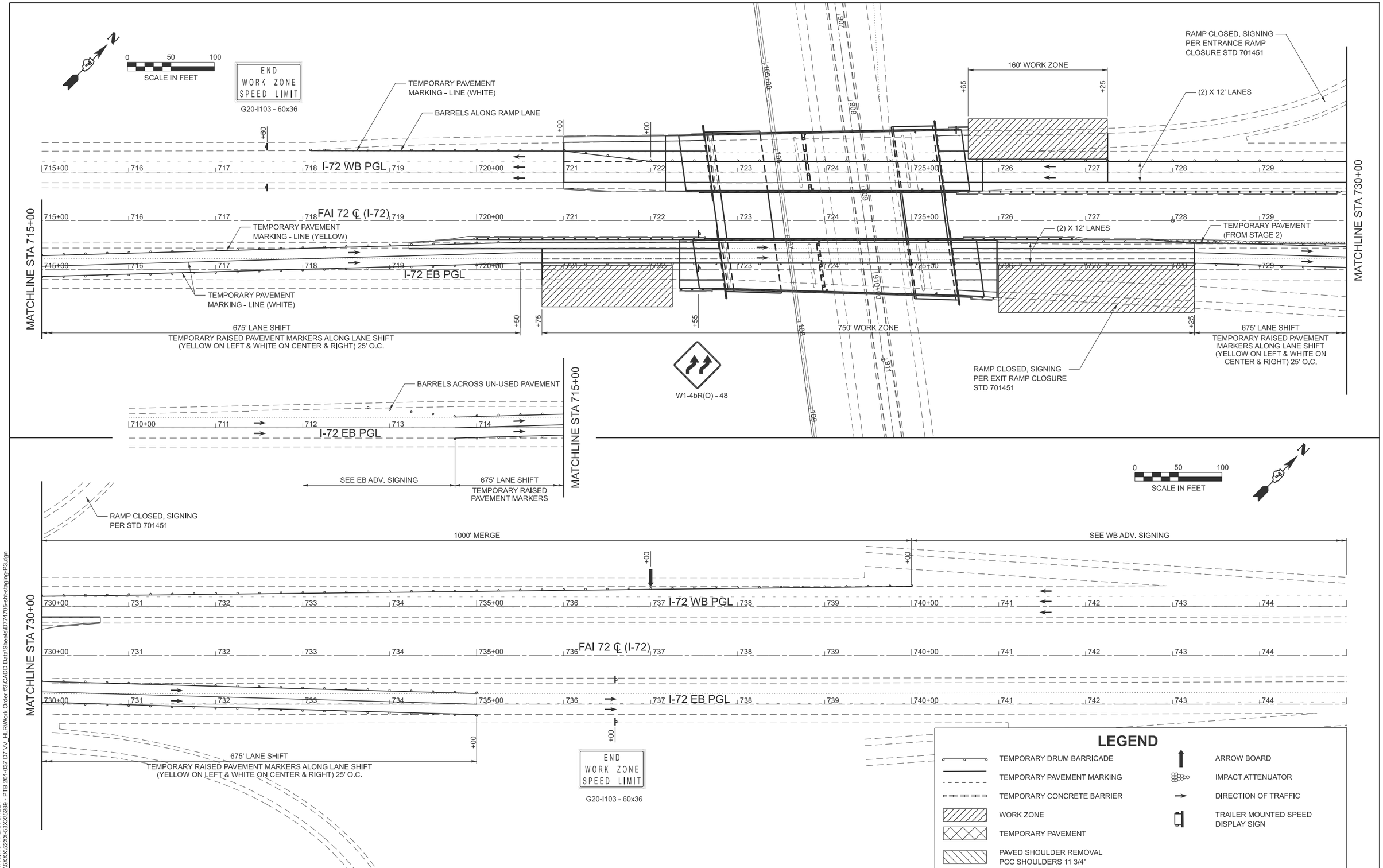

MODEL: I 72 STAGING 1 PLAN SHEET
FILE NAME: P:\5XXX\52XX-53XX\5289 - PTB 201-037 D7 VV_HLR\Work Order #3\CADD Data\Sheets\D774705-sht-staging-P3.dgn

CDI CIVIL DESIGN, INC. WBE | DBE EFFINGHAM, IL LICENSE #184.003222

USER NAME = kulrich	DESIGNED -	REVISED -
	DRAWN -	REVISED -
	CHECKED -	REVISED -
PLOT DATE = 8/20/2025	DATE -	REVISED -

STATE OF ILLINOIS
DEPARTMENT OF TRANSPORTATION

STAGING PLAN
STAGE 3 TRAFFIC

SCALE: 1"=50' | SHEET 6 OF 6 SHEETS | STA. 715+00.00 TO STA. 745+00.00

F.A.I. RTE.	SECTION	COUNTY	TOTAL SHEETS	SHEET NO.
72	(58-63 HVB) BR	MACON	122	36

CONTRACT NO. 74705

ILLINOIS | FED. AID PROJECT

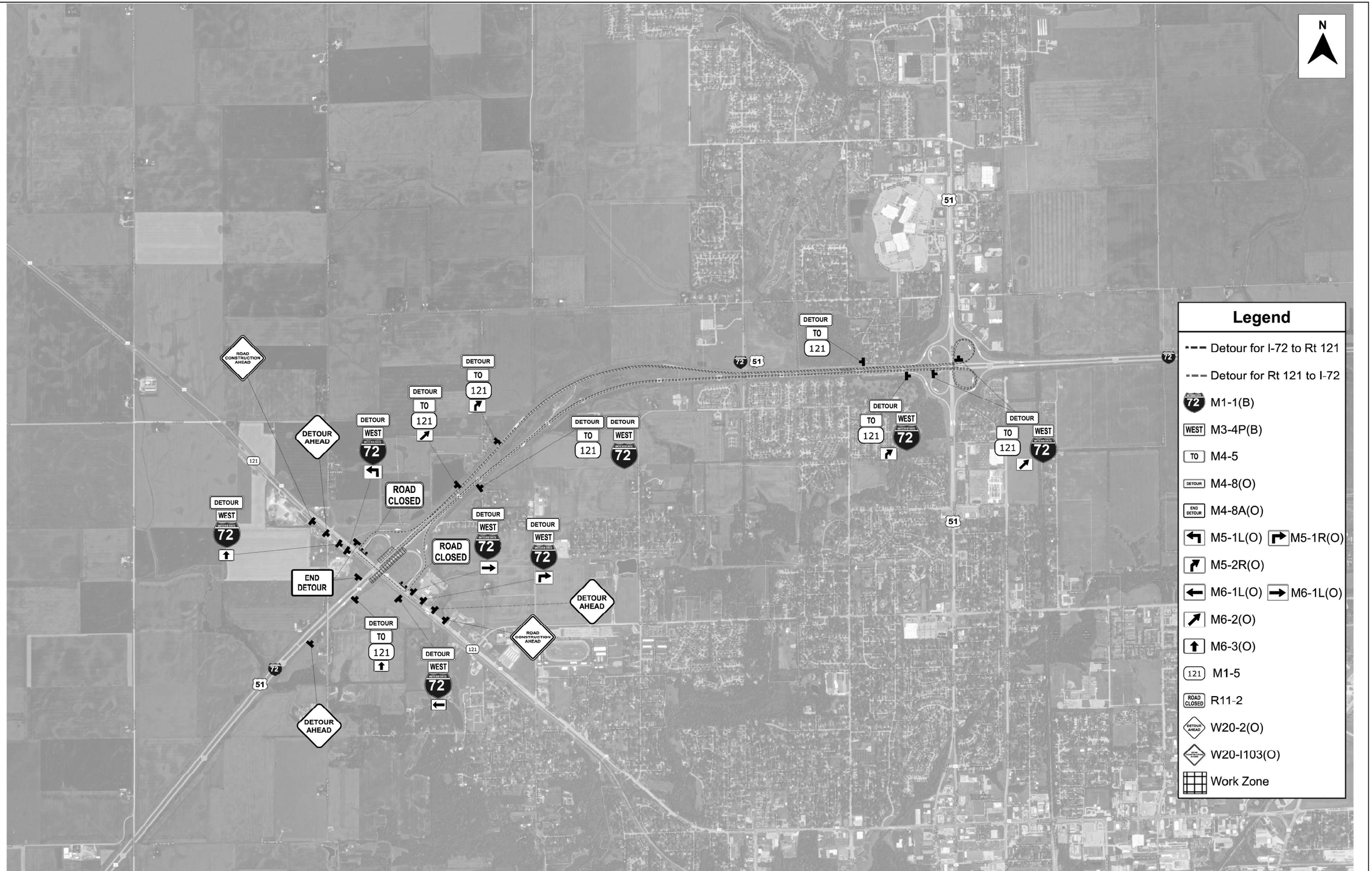

MODEL: Detour1 [Sheet]
FILE NAME: P:\5XXX\52XX-53XX\5289 - PTB 201-037 D7 VV_HLR\Work Order #3\CADD Data\Sheets\D774705-sht-staging-P3.dgn

CDI CIVIL DESIGN, INC. WBE | DBE EFFINGHAM, IL LICENSE #184.003222	USER NAME = kulrich	DESIGNED -	REVISED -	STATE OF ILLINOIS DEPARTMENT OF TRANSPORTATION	DETOUR PLAN STAGE 3	F.A.I. RTE.	SECTION	COUNTY	TOTAL SHEETS / SHEET NO.
		DRAWN -	REVISED -			72	(58-63 HVB) BR	MACON	122 / 37
		CHECKED -	REVISED -					CONTRACT NO. 74705	
	PLOT DATE = 8/21/2025	DATE -	REVISED -		SCALE: SHEET 1 OF 3 SHEETS STA. TO STA.			ILLINOIS FED. AID PROJECT	

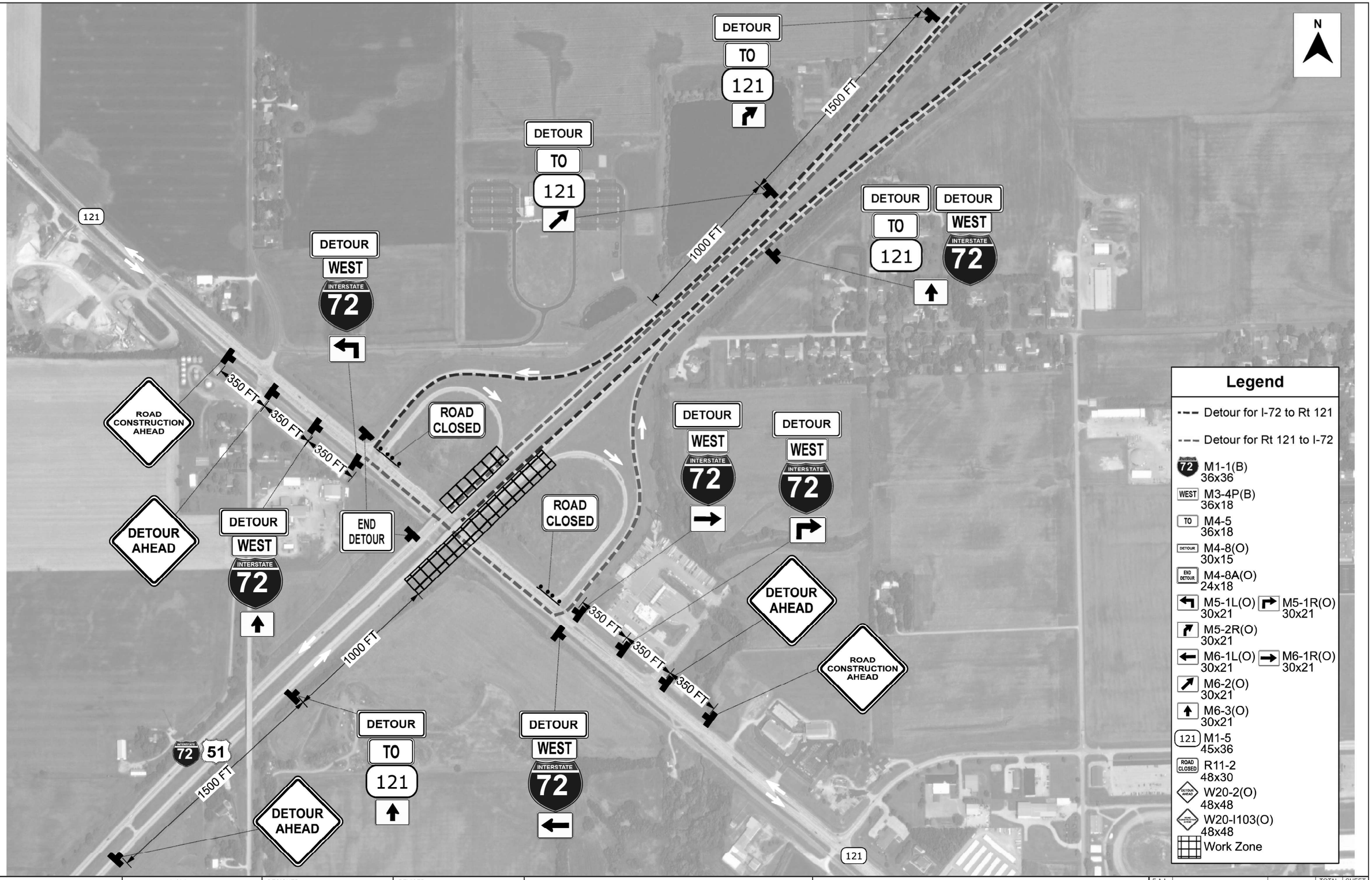

MODEL: Detour2 [Sheet]
FILE NAME: P:\5XXX\52XX-53XX\5289 - PTB 201-037 D7 VV_HLR\Work Order #3\CADD Data\Sheets\D774705-sht-staging-P3.dgn

CDI
CIVIL DESIGN, INC.
WBE | DBE
EFFINGHAM, IL
LICENSE #184.003222

USER NAME = kulrich	DESIGNED -	REVISED -	
	DRAWN -	REVISED -	
	CHECKED -	REVISED -	
PLOT DATE = 8/21/2025	DATE -	REVISED -	

STATE OF ILLINOIS
DEPARTMENT OF TRANSPORTATION

DETOUR PLAN
STAGE 3

SCALE: | SHEET 2 OF 3 SHEETS | STA. | TO STA.

F.A.I. RTE.	SECTION	COUNTY	TOTAL SHEETS	SHEET NO.
72	(58-63 HVB) BR	MACON	122	38
		CONTRACT NO. 74705		
		ILLINOIS	FED. AID PROJECT	

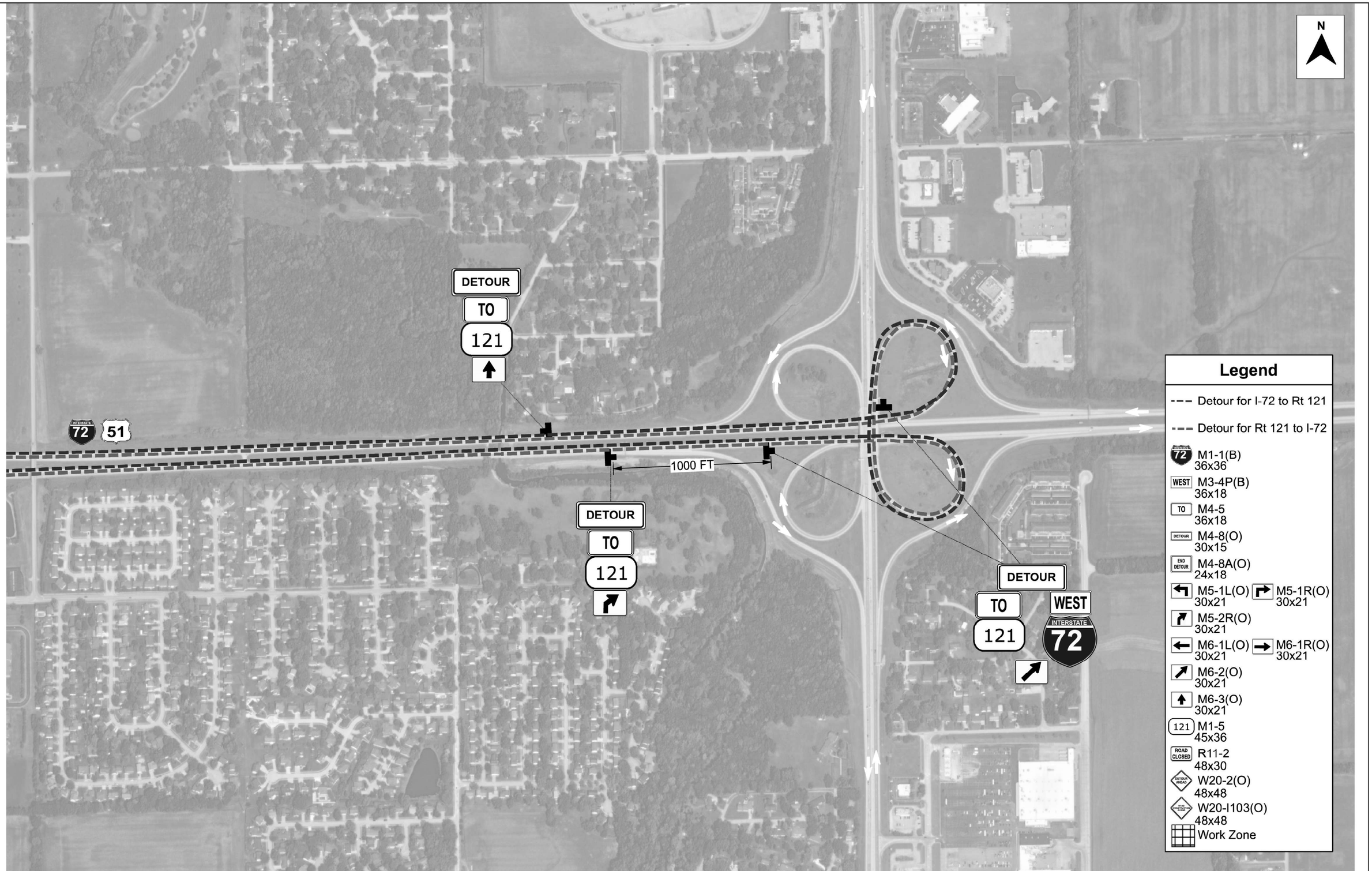

MODEL: Detour3 [Sheet]
FILE NAME: P:\5XXX\52XX-53XX\5289 - PTB 201-037 D7 VV_HLR\Work Order #3\CADD Data\Sheets\D774705-sht-staging-P3.dgn

CDI
CIVIL DESIGN, INC.
WBE | DBE
EFFINGHAM, IL
LICENSE #184.003222

USER NAME = kulrich	DESIGNED -	REVISED -
	DRAWN -	REVISED -
	CHECKED -	REVISED -
PLOT DATE = 8/21/2025	DATE -	REVISED -

STATE OF ILLINOIS
DEPARTMENT OF TRANSPORTATION

DETOUR PLAN
STAGE 3

SCALE: | SHEET 3 OF 3 SHEETS | STA. | TO STA.

F.A.I. RTE.	SECTION	COUNTY	TOTAL SHEETS	SHEET NO.
72	(58-63 HVB) BR	MACON	122	39
		CONTRACT NO. 74705		
		ILLINOIS FED. AID PROJECT		

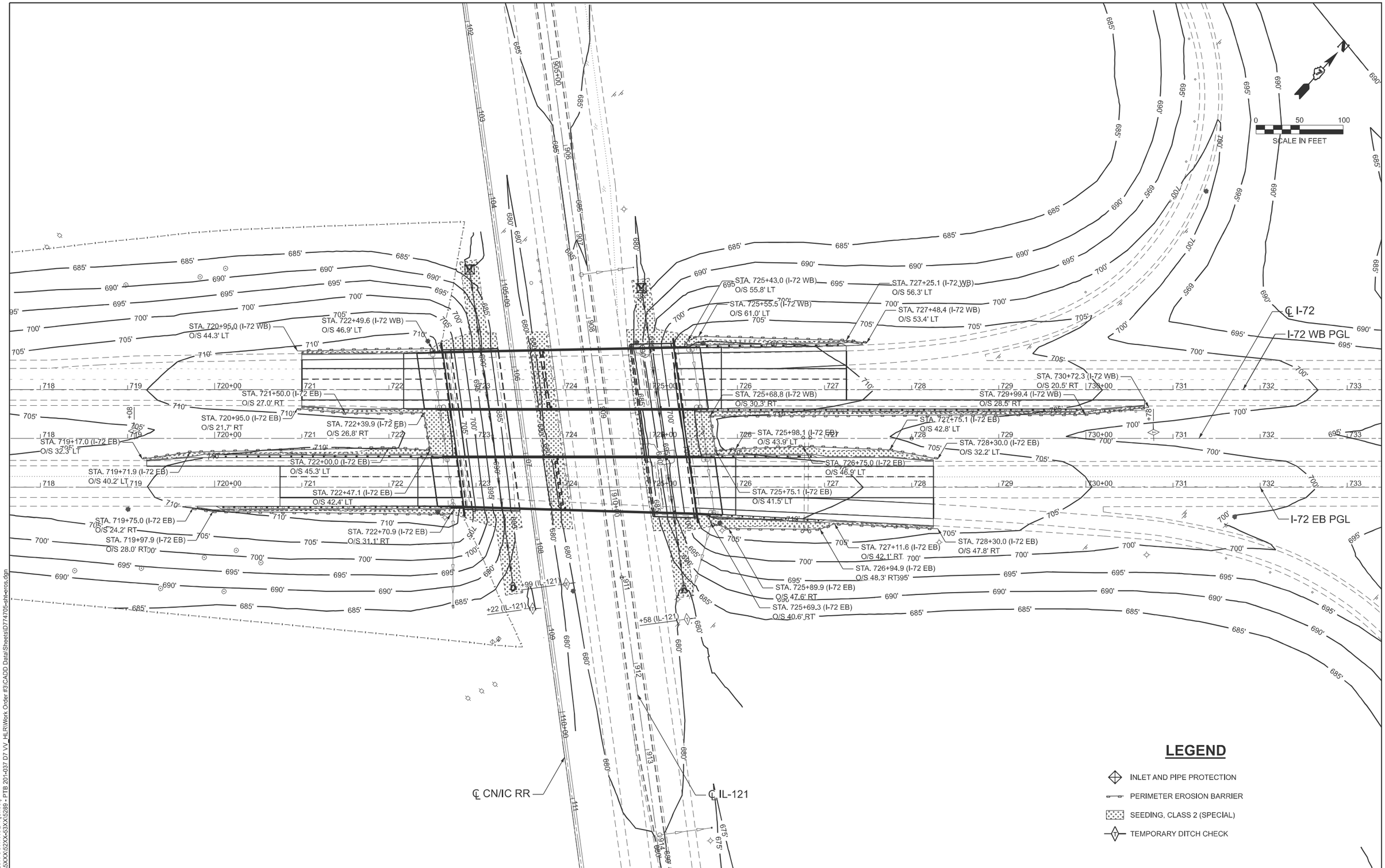

MODEL: EROSION CONTROL-1 [Sheet]
FILE NAME: P:\5XXX\52XX-53XX\5289 - PTB 201-037 D7 VV_HLR\Work Order #3\CADD Data\Sheets\D774705-sht-eros.dgn

CDI
CIVIL DESIGN, INC.
WBE | DBE
EFFINGHAM, IL
LICENSE #184.003222

USER NAME = kulrich	DESIGNED -	REVISED -	
	DRAWN -	REVISED -	
	CHECKED -	REVISED -	
PLOT DATE = 8/20/2025	DATE -	REVISED -	

STATE OF ILLINOIS
DEPARTMENT OF TRANSPORTATION

EROSION CONTROL PLAN

SCALE: 1" = 50' | SHEET 1 OF 1 SHEETS | STA. TO STA.

F.A.I RTE.	SECTION	COUNTY	TOTAL SHEETS	SHEET NO.
72	(56-63 HVB) BR	MACON	122	40
		CONTRACT NO. 74705		
		ILLINOIS FED. AID PROJECT		

BENCHMARK: DEC MAINT AZ – Brass disk set in concrete, 14.55' Lt., Sta. 725+59.66, Elev. 712.91.

EXISTING STRUCTURES: 58-63 HVB – S.N. 058-0074 (EB) S.N. 058-0075 (WB), Sta. 724+45.63 (F.A.I. 72) and Sta. 909+38.59 (IL. RTE. 121). The existing Dual structures were originally built in 1976. The structures consist of steel plate girders with a pin & link detail located on span 3, carrying a partially composite concrete deck. The superstructures are supported by multi-column piers and stub abutments, all founded on precast concrete piles. The back to back of abutment length is 268'-9¼". 58'-4¾" to 66'-3" o.-o. deck Eastbound.; 66'-4⅛" to 71'-7⅞" o.-o. deck Westbound.
Structures are to be removed and replaced. Traffic to be maintained utilizing stage construction.

No Salvage.

INDEX OF STRUCTURE SHEETS

1. General Plan and Elevation
2-4. General Details
5. Footing Layout
6-7. Stage Construction Details
8. Temporary Concrete Barrier
9-18. Top of Slab Elevations
19-22. Top of Approach Slab Elevations
23-24. Superstructure
25. Superstructure Cross Sections
26-27. Superstructure Details
28. Drainage Scuppers, DS-11
29-32. Diaphragm Details
33-48. Precast Bridge Approach Slab Details
49. Preformed Joint Strip Seal
50. Structural Steel
51-54. Structural Steel Details
55. Bearing Details
56. South Abutment (W.B.)
57. North Abutment (W.B.)
58. South Abutment (E.B.)
59. North Abutment (E.B.)
60. Abutment Details
61-64. Pier
65. Metal Shell Pile Details
66. Bar Splicer Assembly and Mechanical Splicer Details
67-70. Borings

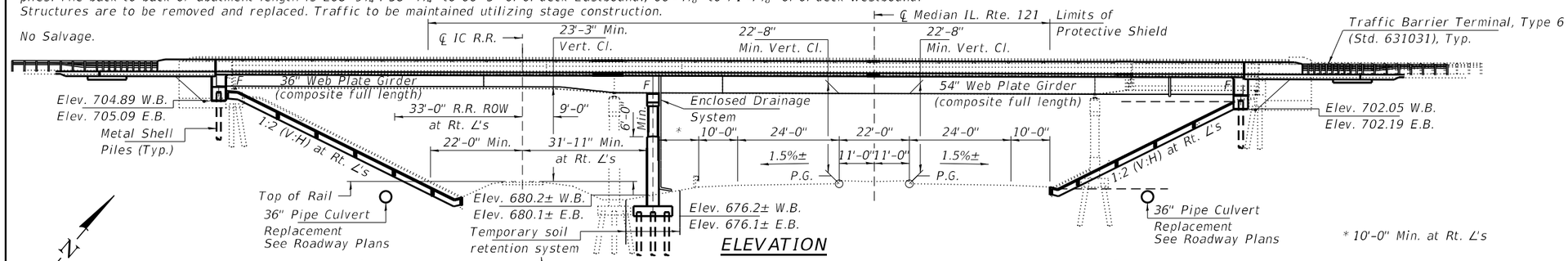

ELEVATION

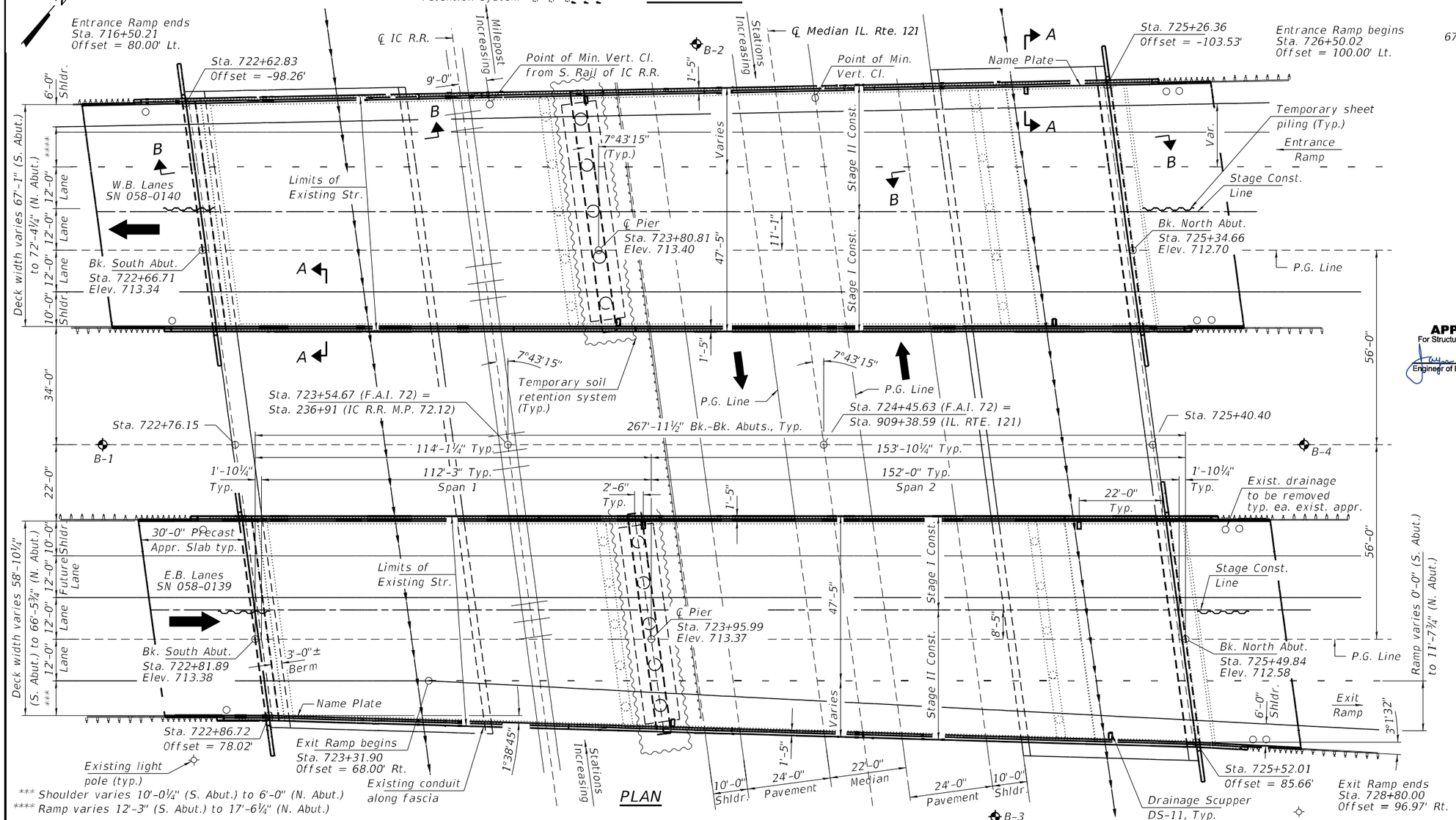

PLAN

LICENSED STRUCTURAL ENGINEER STEVEN W. MEGGINSON 081-6064 SPRINGFIELD, IL STATE OF ILLINOIS

Expires 11-30-2026

Steven W. Megginson 08/20/2025
ILLINOIS STRUCTURAL NO. 081-6064
For sheets 1 to 60 & 65 to 70.
Piers not included

APPROVED
For Structural Adequacy Only
Engineer of Bridges & Structures

LICENSED STRUCTURAL ENGINEER KASHIF ALI NAYYER SYED 081-7659 SPRINGFIELD, IL STATE OF ILLINOIS

Expires 11-30-2026

Kashif Ali N. Syed 08/20/2025
ILLINOIS STRUCTURAL NO. 081-7659
For sheets 61 to 64

GENERAL PLAN & ELEVATION
I-72 OVER IL. 121 & IC R.R.
F.A.I. 72 SECTION (58-63HVB)BR
MACON COUNTY
STATION 724+45.63
STRUCTURE NO. 058-0139 (E.B.)
STRUCTURE NO. 058-0140 (W.B.)

FILE NAME = 190501-sht-bridge.dgn	USER NAME = rhosick	DESIGNED - S.M.S.	REVISED -
HAMPTON, LENZINI AND RENWICK, INC. 3085 STEVENSON DRIVE, SUITE 201 SPRINGFIELD, ILLINOIS 62703 ILLINOIS PROFESSIONAL DESIGN FIRM LS / PE / SE CORP. 184.000959	PLOT SCALE =	CHECKED - S.W.M.	REVISED -
	PLOT DATE = 8/21/2025	DRAWN - R.D.H.	REVISED -
		CHECKED - S.M.S.	REVISED -

STATE OF ILLINOIS
DEPARTMENT OF TRANSPORTATION

GENERAL PLAN AND ELEVATION
SN 058-0139(E.B.) & 058-0140(W.B.)

SHEET NO. 1 OF 70 SHEETS

F.A.I.	SECTION	COUNTY	TOTAL SHEETS	SHEET NO.
72	(58-63HVB)BR	MACON	122	41
		CONTRACT NO. 74705		
		ILLINOIS FED. AID PROJECT		

GENERAL NOTES

Fasteners shall be ASTM F 3125 Grade A325 Type 1, hot dip galvanized bolts in metallized areas. Bolts 7/8 in. diameter, holes 15/16 in. diameter, unless otherwise noted. See special provision for "Metallizing of Structural Steel".

Calculated weight of Structural Steel – SN 058-0139 = 1,124,960 lbs. – SN 058-0140 = 1,249,300 lbs.

All structural steel shall be AASHTO M270 Grade 50 and shall be metallized. See Special Provision for "Metallizing of Structural Steel."

No field welding is permitted except as specified in the contract documents.

Reinforcement bars designated (E) shall be epoxy coated.

Slipforming of the parapets is not allowed.

Bearing seat surfaces shall be constructed or adjusted to the designated elevations within a tolerance of 1/8 in. (0.01 ft.). Adjustment shall be made either by grinding the surface or by shimming the bearings.

A film forming Concrete Sealer shall be applied to the designated areas of the Pier.

The existing structural steel coating contains lead. The Contractor shall take appropriate precautions to address the presence of lead on this project.

If the Contractor elects to use cantilever forming brackets on the exterior beams or girders, the brackets shall be placed at the same locations as required for the hardwood blocks in Article 503.06(b) of the Standard Specifications. If additional cantilever forming brackets are required, hardwood blocking shall be wedged between the exterior and first interior beam at each of these additional bracket locations.

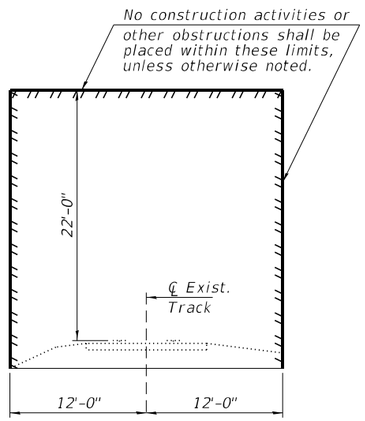

CONSTRUCTION CLEARANCE DIAGRAM

(Horiz. dim. at Rt. L's to ℄ track)

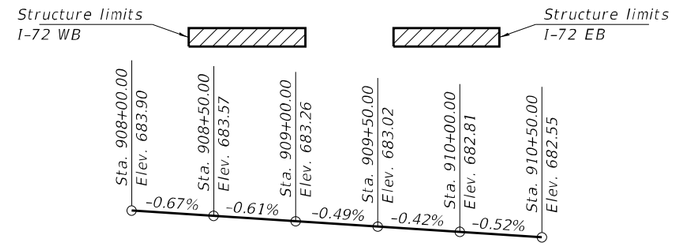

EXISTING PROFILE GRADE

ILL. Rte. 121 NB

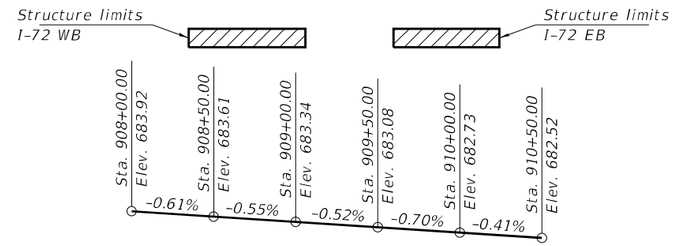

EXISTING PROFILE GRADE

ILL. Rte. 121 SB

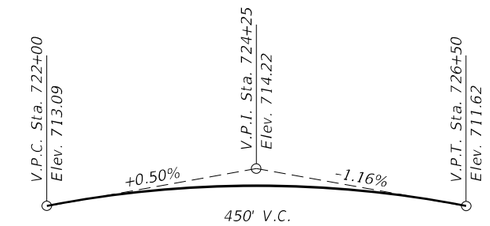

PROFILE GRADE

F.A. I-72 (Along I-72 EB/WB PGLS)

Note: Up to 1/4 inch to be ground off the bridge deck and the bridge approach slabs. The Profile Grade shows the final grade after grinding.

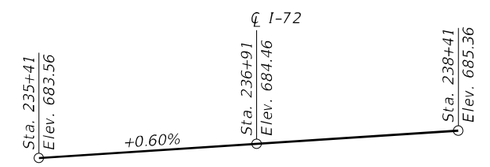

PROFILE GRADE

EXISTING IC RR.
Sta. 723+54.67 I-72 =
Sta. 236+91.00 IC R.R.

TOTAL BILL OF MATERIAL

ITEM	UNIT	SN 058-0139 (E.B.)		SN 058-0140 (W.B.)		TOTAL
		SUPER	SUB	SUPER	SUB	
Removal of Existing Structures No. 1	Each					1
Removal of Existing Structures No. 2	Each					1
Slope Wall Removal	Sq. Yd.					2,980
Protective Shield	Sq. Yd.	1,145		1,270		2,415
Structure Excavation	Cu. Yd.		390		435	825
Concrete Structures	Cu. Yd.		411.4		439.9	851.3
Concrete Superstructure	Cu. Yd.	610.4		667.0		1,277.4
Protective Coat	Sq. Yd.	2,463		2,714		5,177
Furnishing and Erecting Structural Steel	L. Sum	0.5		0.5		1
Stud Shear Connectors	Each	10,710		11,900		22,610
Reinforcement Bars, Epoxy Coated	Pound	164,600	60,580	176,440	65,990	467,610
Bar Splicers	Each	1,010	197	1,008	197	2,412
Mechanical Splicers	Each		242		242	484
Slope Wall 4 Inch	Sq. Yd.		1,242		1,526	2,768
Furnishing Metal Shell Piles 14"x0.312"	Foot		2,870		2,961	5,831
Furnishing Metal Shell Piles 16"x0.375"	Foot		1,320		1,485	2,805
Driving Piles	Foot		4,190		4,446	8,636
Test Pile Metal Shells	Each		3		3	6
Name Plates	Each	1		1		2
Preformed Joint Strip Seal	Foot	125		138		263
Anchor Bolts, 1"	Each	36		40		76
Anchor Bolts, 1 1/4"	Each	18		20		38
Temporary Sheet Piling	Sq. Ft.		1,340		1,340	2,680
Temporary Soil Retention System	Sq. Ft.		896		980	1,876
Drainage System for Structures	L. Sum	0.5		0.5		1
Granular Backfill for Structures	Cu. Yd.		280		320	600
Concrete Sealer	Sq. Ft.		878		970	1,848
Geocomposite Wall Drain	Sq. Yd.		140		150	290
Pipe Underdrains for Structures 4"	Foot		204		220	424
Bridge Deck Grooving (Longitudinal)	Sq. Yd.	1,487		1,842		3,329
Concrete Wearing Surface, 5"	Sq. Yd.	414		459		873
Precast Bridge Approach Slab	Sq. Ft.	3,571		3,960		7,531
Bar Terminators	Each		590		656	1,246
Drainage Scuppers, DS-11	Each	4		4		8
Diamond Grinding (Bridge Section)	Sq. Yd.	2,025		2,276		4,301
Temporary Support System	Each		2		2	4

STA. 724+45.63
BUILT 202_ BY
STATE OF ILLINOIS
F.A.I. RT. 72 SEC. (58-63HVB)BR
LOADING HL-93
STR. NO. 058-0139

NAME PLATE

See Std. 515001

STA. 724+45.63
BUILT 202_ BY
STATE OF ILLINOIS
F.A.I. RT. 72 SEC. (58-63HVB)BR
LOADING HL-93
STR. NO. 058-0140

NAME PLATE

See Std. 515001

SEISMIC DATA

Seismic Performance Zone (SPZ) = 1
Design Spectral Acceleration at 1.0 sec. (S_{D1}) = 0.149g
Design Spectral Acceleration at 0.2 sec. (S_{DS}) = 0.280g
Soil Site Class = D

DESIGN SPECIFICATIONS

2020 AASHTO LRFD Bridge Design Specifications, 9th Edition.

LOADING HL-93

Allow 50#/sq. ft. for future wearing surface.

DESIGN STRESSES

FIELD UNITS

f'c = 4,000 psi (Superstructure)
f'c = 3,500 psi (Substructure)
fy = 60,000 psi (Reinf.)
fy = 50,000 psi (M270 Grade 50)
All Structural Steel shall be metallized.

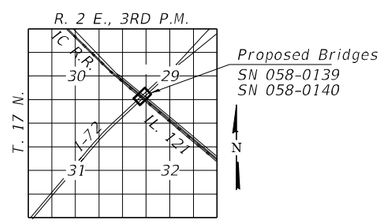

LOCATION SKETCH

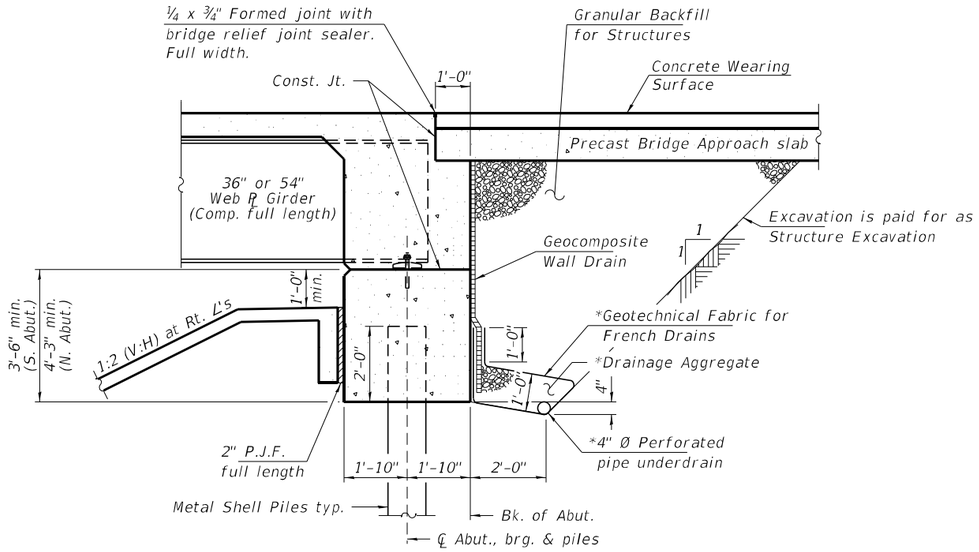

SECTION THRU INTEGRAL ABUTMENT

(Horiz. dim. at Rt. L's)

*Included in the cost of Pipe Underdrains for Structures.

Note:
All drainage system components and Granular Backfill for Structures shall extend from the ℄ F.A.I. 74 to 2'-0" from the end of each wingwall extension except an outlet pipe shall extend until intersecting with the side slopes. The pipes shall drain into concrete headwalls. (See Article 601.05 of the Standard Specifications and Highway Standard 601101).

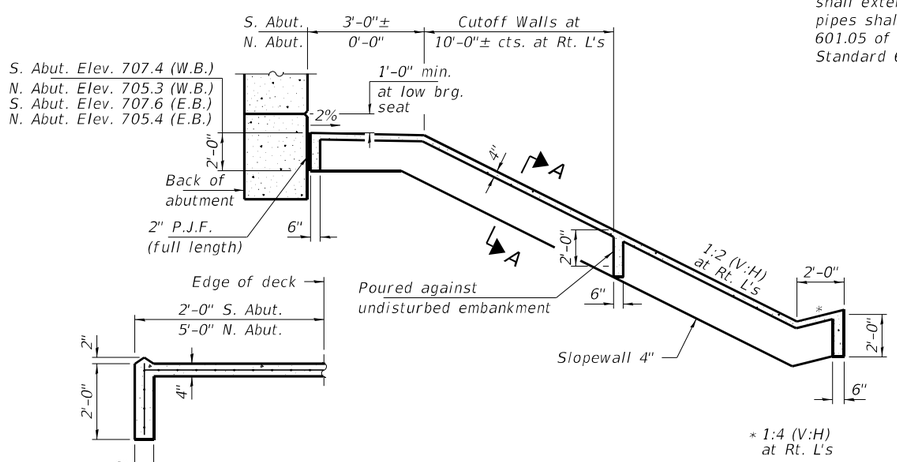

SECTION A-A

SECTION B-B
CONCRETE SLOPEWALL

Slope wall shall be reinforced with welded wire fabric, 6 in. x 6 in. - W4.0 x W4.0, weighing 58 lbs. per 100 sq. ft.

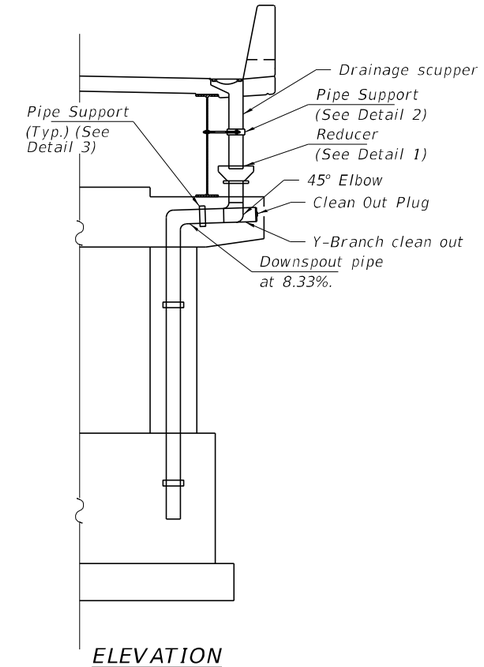

ELEVATION

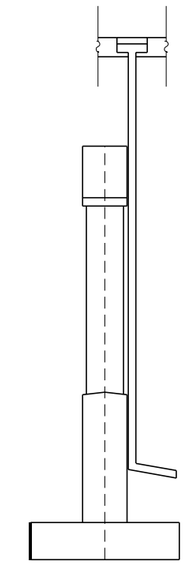

END VIEW

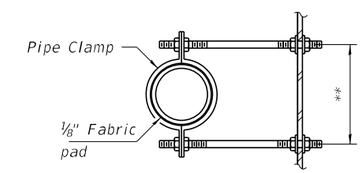

SECTION C-C

**Dimension as required by pipe clamp

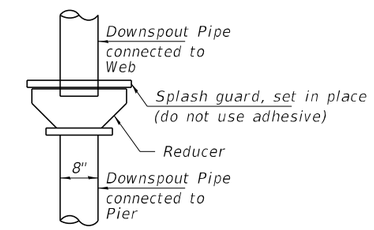

DETAIL 1

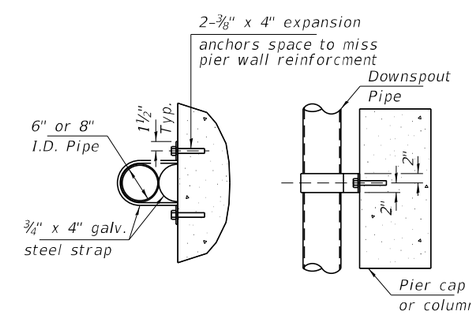

PLAN

ELEVATION

DETAIL 3

(Pipe connection to Pier)

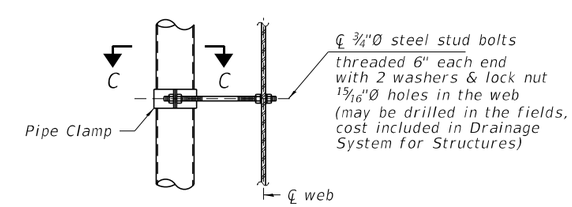

DETAIL 2

Elevation pipe connection to web

Notes:

Bolts, expansion anchors, washers, nuts, pipe clamp, etc. shall conform to the requirements of ASTM A 307 and shall be galvanized according to AASHTO M 232.

As an alternate, bolts, anchor studs, washers and nuts may be stainless steel according to Article 1006.29(d) of the Standard Specifications.

Cost of Hangars, Pipe, Tees, Elbows, Cleanouts, Wyes, Splash blocks and all appurtenances required for the installation of the drainage collection system, except scuppers, shall be included in and paid for at the contract lump sum price for Drainage System for Structures.

Structural steel scupper frames and downspouts, when utilized, shall be galvanized according to AASHTO M111.

ENCLOSED DRAINAGE SYSTEM

FILE NAME = 190501-sht-bridge.dgn	USER NAME = rhosick	DESIGNED - S.M.S.	REVISED -	STATE OF ILLINOIS DEPARTMENT OF TRANSPORTATION	GENERAL DETAILS SN 058-0139(E.B.) & 058-0140(W.B.)	F.A.I.	SECTION	COUNTY	TOTAL SHEETS / SHEET NO.
HAMPTON, LENZINI AND RENWICK, INC. 3045 STEVENSON DRIVE, SUITE 201 SPRINGFIELD, ILLINOIS 62703		CHECKED - S.W.M.	REVISED -			72	(58-63HVB)BR	MACON	122 / 43
	PLOT SCALE =	DRAWN - R.D.H.	REVISED -					CONTRACT NO. 74705	
ILLINOIS PROFESSIONAL DESIGN FIRM LS / PE / SE CORP. 184.000959	PLOT DATE = 8/21/2025	CHECKED - S.M.S.	REVISED -		SHEET NO. 3 OF 70 SHEETS			ILLINOIS FED. AID PROJECT	

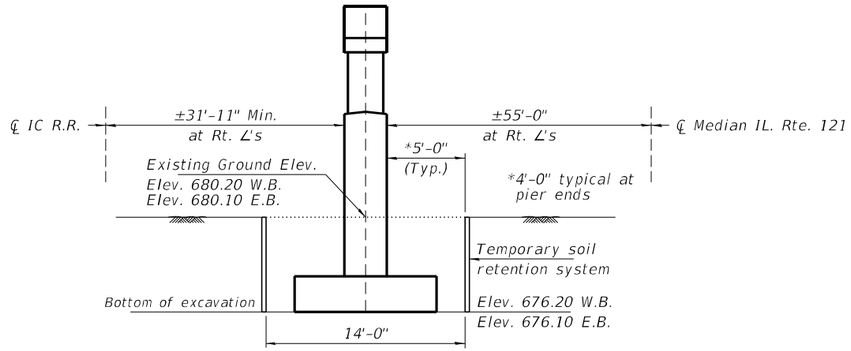

TEMPORARY SOIL RETENTION SYSTEM - ELEVATION

(Looking West)

Note:
A cantilevered sheet piling design does not appear feasible and additional members or other retention systems may be necessary. The Contractor shall submit a temporary soil retention system design including plan details and calculations for review and acceptance by the Engineer.

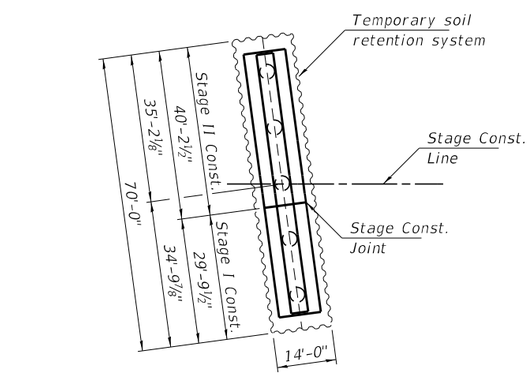

W.B. 058-0140

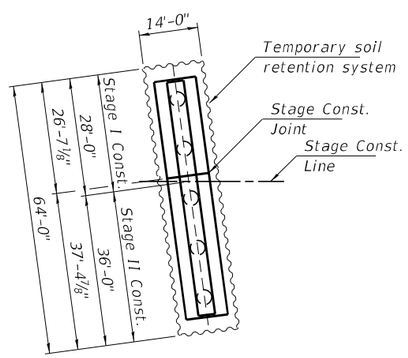

E.B. 058-0139

TEMPORARY SOIL RETENTION SYSTEM - PLAN

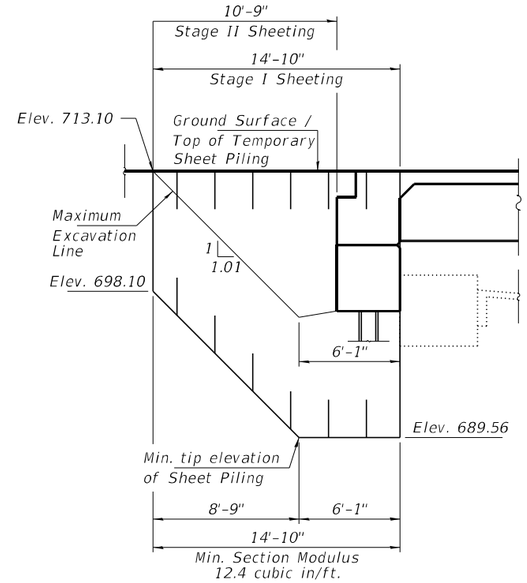

SOUTH ABUTMENT
(E.B. 058-0139)

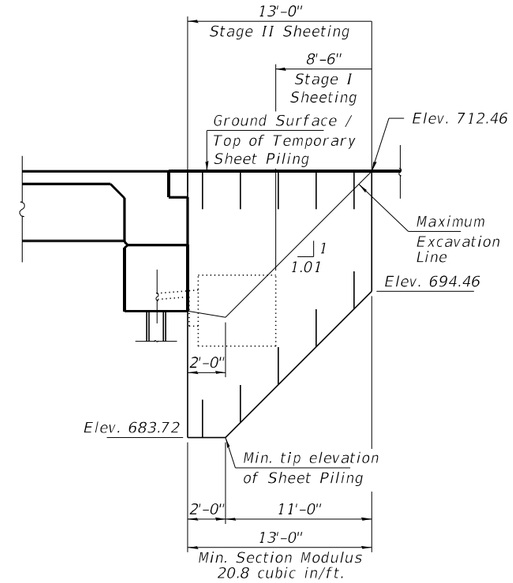

NORTH ABUTMENT
(E.B. 058-0139)

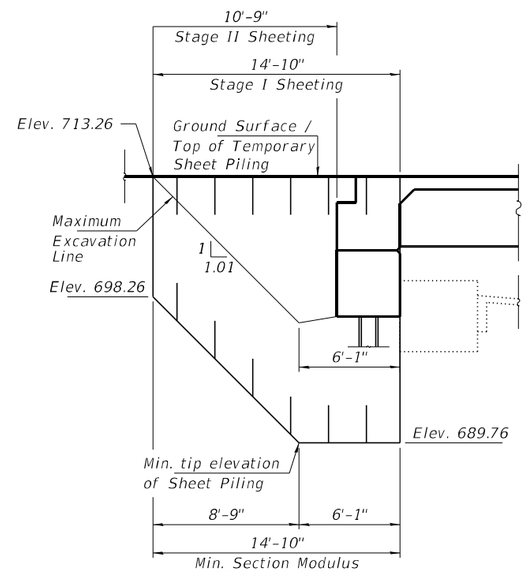

SOUTH ABUTMENT
(E.B. 058-0140)

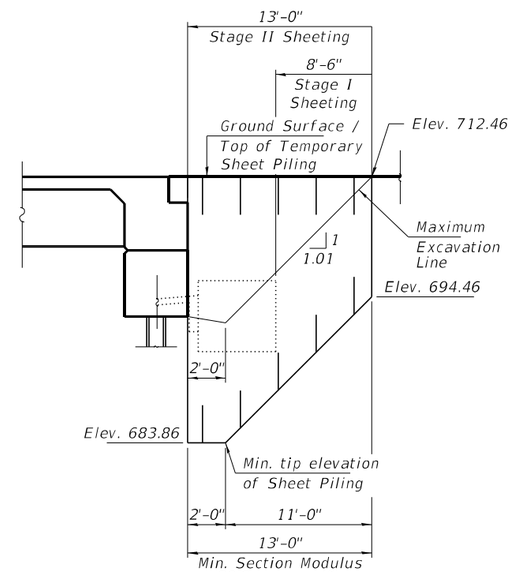

NORTH ABUTMENT
(E.B. 058-0140)

TEMPORARY SHEET PILING AT ABUTMENTS

Notes:
If the Contractor chooses to alter the temporary cantilevered sheet piling design requirements shown on the plans, a design submittal including plan details and calculations will be required for review and acceptance by the Engineer.

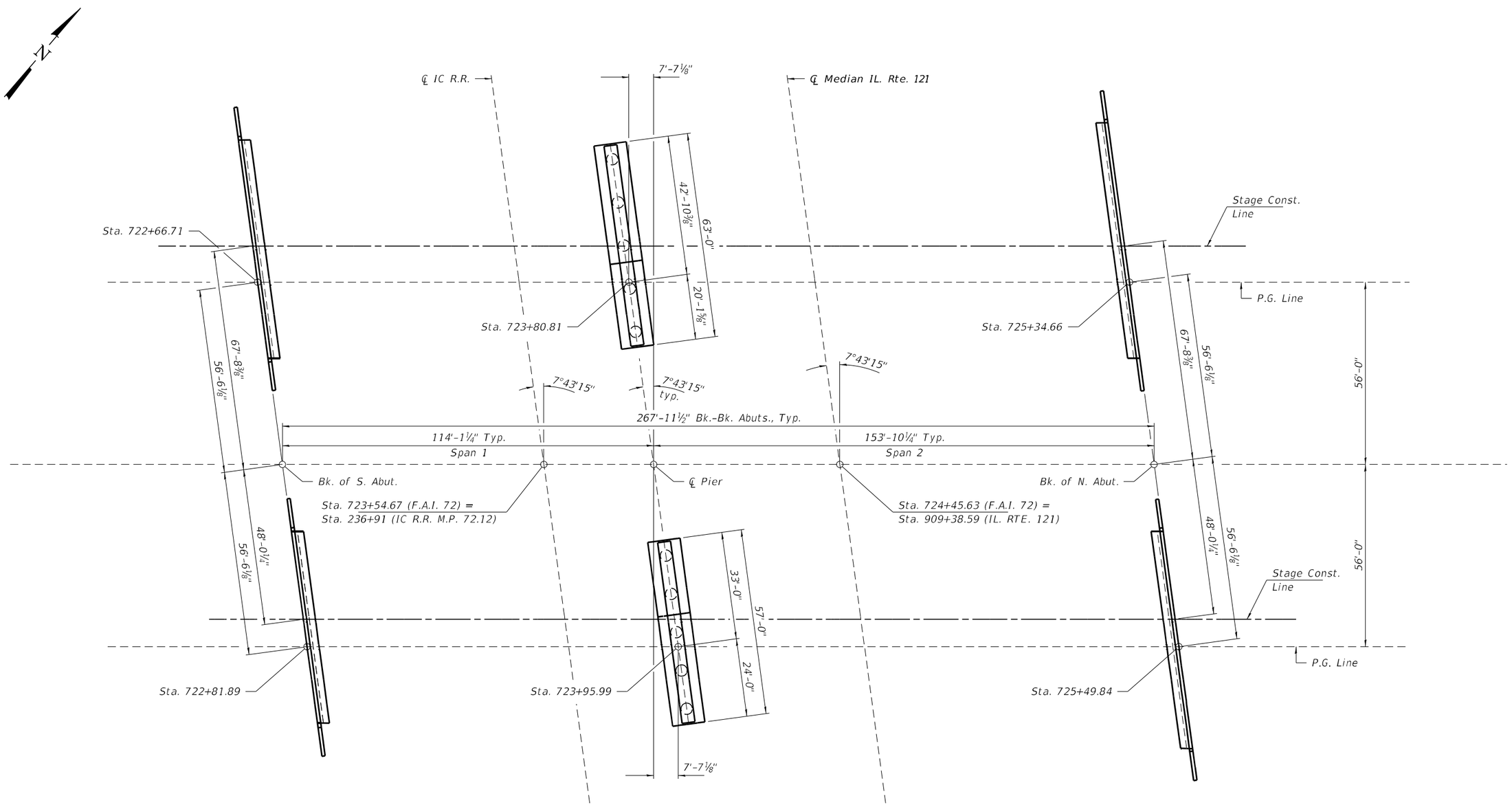

FOOTING LAYOUT

FILE NAME = 190501-sht-bridge.dgn	USER NAME = rhosick	DESIGNED - S.M.S.	REVISED -	STATE OF ILLINOIS DEPARTMENT OF TRANSPORTATION	FOOTING LAYOUT SN 058-0139(E.B.) & 058-0140(W.B.)	F.A.I.	SECTION	COUNTY	TOTAL SHEETS / SHEET NO.
HAMPTON, LENZINI AND RENWICK, INC. 3305 STEVENSON DRIVE, SUITE 201 SPRINGFIELD, ILLINOIS 62703 ILLINOIS PROFESSIONAL DESIGN FIRM LS / PE / SE CORP. 184.000959		CHECKED - S.W.M.	REVISED -			72	(58-63HVB)BR	MACON	122 / 45
	PLOT SCALE =	DRAWN - R.D.H.	REVISED -					CONTRACT NO. 74705	
	PLOT DATE = 8/21/2025	CHECKED - S.M.S.	REVISED -		SHEET NO. 5 OF 70 SHEETS			ILLINOIS FED. AID PROJECT	

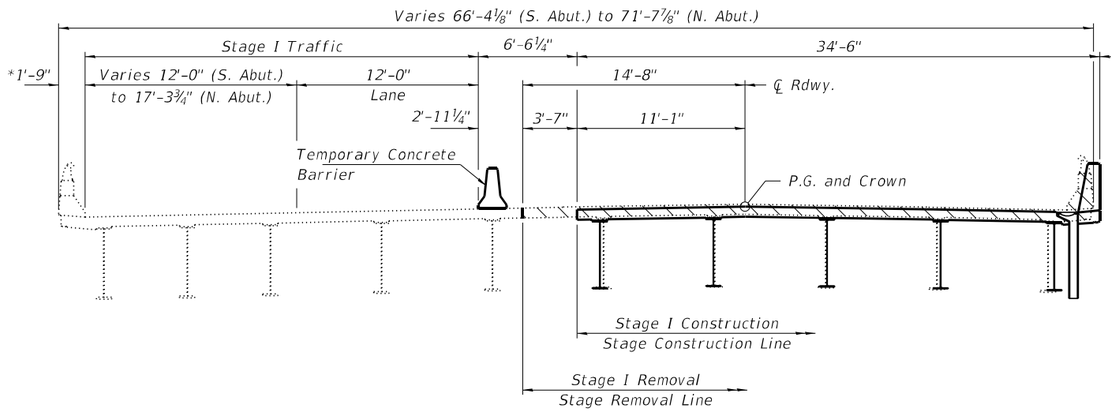

STAGE I REMOVAL AND CONSTRUCTION (WEST BOUND LANES)

(Looking North, dimensions measured perpendicular to ℄ I-72)

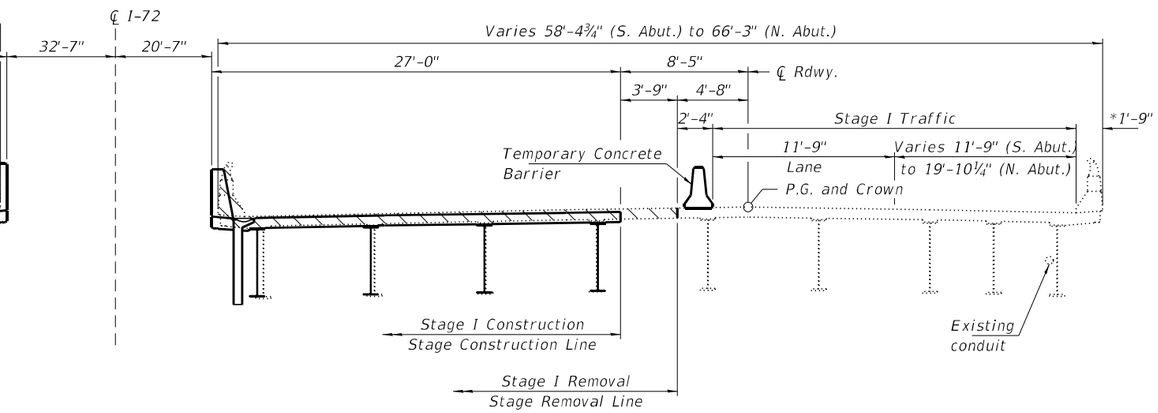

STAGE I REMOVAL AND CONSTRUCTION (EAST BOUND LANES)

(Looking North, dimensions measured perpendicular to ℄ I-72)

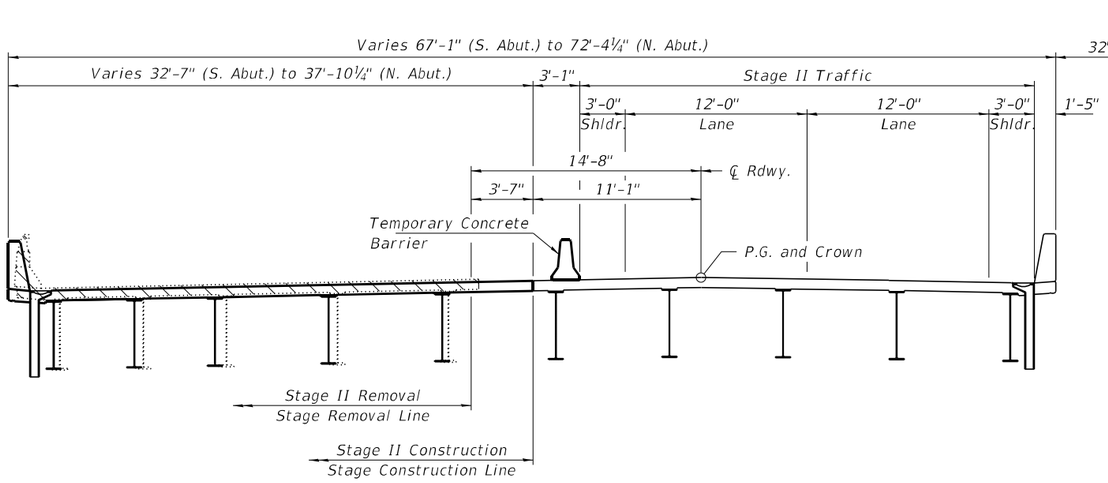

STAGE II REMOVAL AND CONSTRUCTION (WEST BOUND LANES)

(Looking North, dimensions measured perpendicular to ℄ I-72)

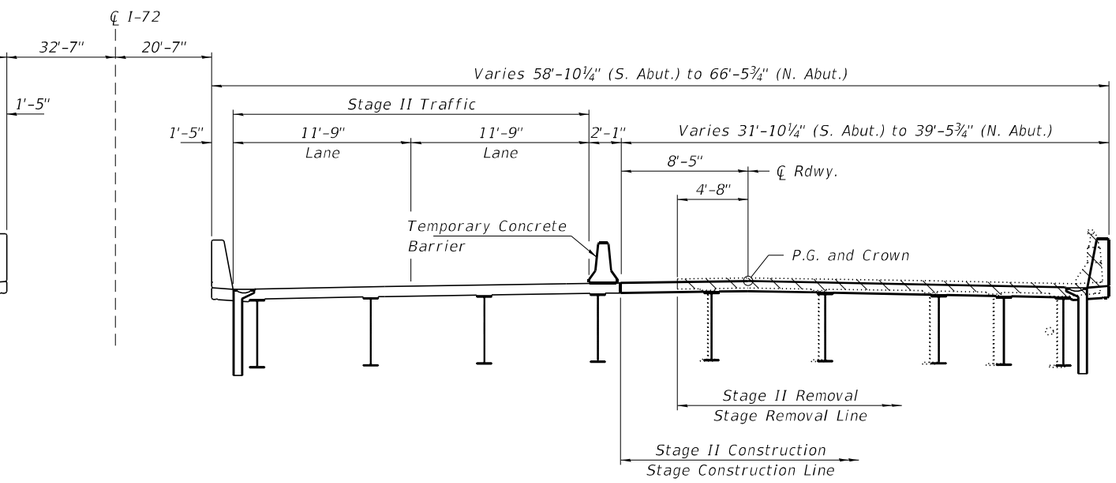

STAGE II REMOVAL AND CONSTRUCTION (EAST BOUND LANES)

(Looking North, dimensions measured perpendicular to ℄ I-72)

NOTES:
For Temporary Concrete Barrier, see sheet 8 of 70.
For quantity of Temporary Concrete Barrier, see roadway plans.
Indicates Removal of Existing Structures No. 1
Indicates Removal of Existing Structures No. 2

* Measured perpendicular to the edge of deck.

FILE NAME = 190501-shl-bridge.dgn	USER NAME = rhosick	DESIGNED - S.M.S.	REVISED -	STATE OF ILLINOIS DEPARTMENT OF TRANSPORTATION	STAGE CONSTRUCTION DETAILS SN 058-0139(E.B.) & 058-0140(W.B.)	F.A.I.	SECTION	COUNTY	TOTAL SHEETS / SHEET NO.
HAMPTON, LENZINI AND RENWICK, INC. 3305 STEVENSON DRIVE, SUITE 201 SPRINGFIELD, ILLINOIS 62703 ILLINOIS PROFESSIONAL DESIGN FIRM LS / PE / SE CORP. 184.000959		CHECKED - S.W.M.	REVISED -			72	(58-63HVB)BR	MACON	122 / 46
	PLOT SCALE =	DRAWN - R.D.H.	REVISED -			CONTRACT NO. 74705			
	PLOT DATE = 8/21/2025	CHECKED - S.M.S.	REVISED -		SHEET NO. 6 OF 70 SHEETS	ILLINOIS	FED. AID PROJECT		

- Indicates Limits of Removal of Existing Structure

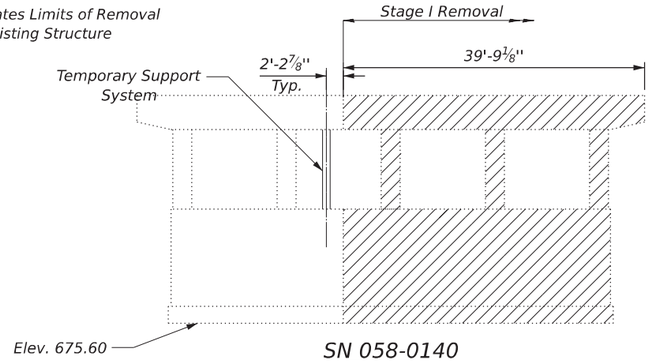

SN 058-0140

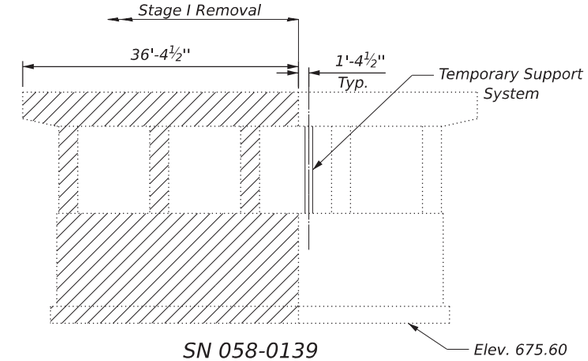

SN 058-0139

STAGE I REMOVAL

(Looking North)
(Horizontal Dimensions shown along ℄ of Pier)

Note:
Partial removal of existing Pier 2 is shown in all sections. Existing Pier 1 are similar.A Temporary Support System will be required to support each existing pier cap as shown in the Eastbound Structure (SN 058-0139) during Stage I Construction. The temporary support system must be in place before the piers are cu. Prior to Stage I removal, piers and abutments shall be saw cut full depth at substructure stage removal line. See Special Provisions.
The Temporary Support System shall be capable of supporting a design service vertical Dead Load of 158 kips and a Vertical Live Load of 163 kips.

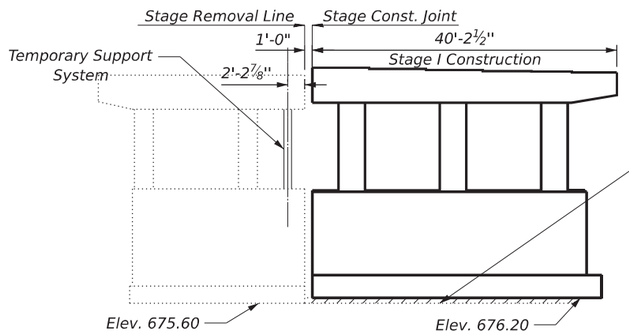

Backfill per Art. 502.10 of the Standard Specifications. Cost included with Structure Excavation

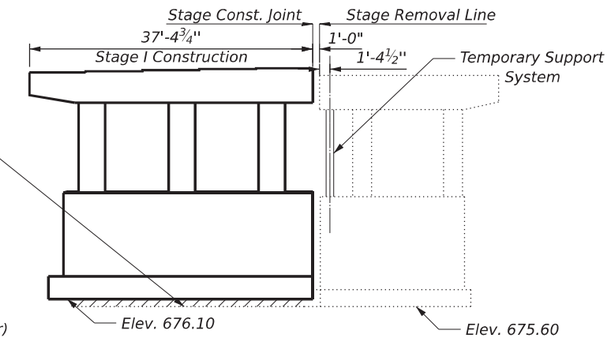

STAGE I CONSTRUCTION

(Looking North)
(Horizontal Dimensions shown along ℄ of Pier)

STAGE CONSTRUCTION SEQUENCE FOR PIER ON EAST BOUND STRUCTURE (SN 058-0139)

1. Install Temporary Support System at each existing pier.
2. Complete Stage I Removal.
3. Backfill to Elevation 676.10.
4. Drive piles beginning at Elevation 676.10 and complete Stage I Pier Construction.
5. Repeat 2 thru 4 for Stage II.

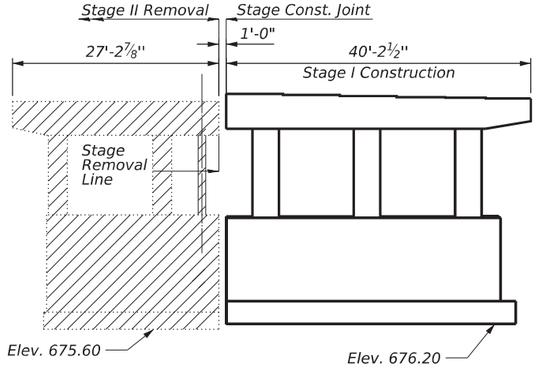

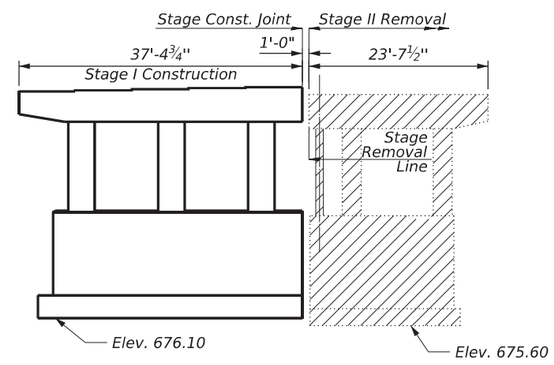

STAGE II REMOVAL

(Looking North)
(Horizontal Dimensions shown along ℄ of Pier)

STAGE CONSTRUCTION SEQUENCE FOR PIER ON WEST BOUND STRUCTURE (SN 058-0140)

1. Install Temporary Support System at each existing pier.
2. Complete Stage I Removal.
3. Backfill to Elevation 676.20.
4. Drive piles beginning at Elevation 676.20 and complete Stage I Pier Construction.
5. Repeat 2 thru 4 for Stage II.

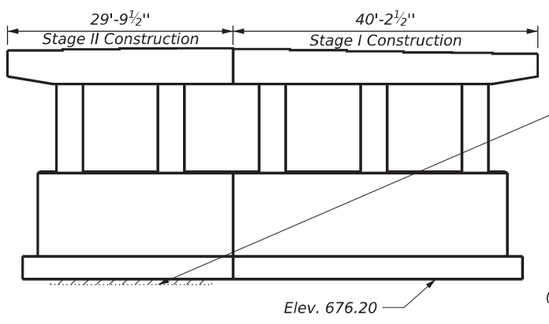

Backfill per Art. 502.10 of the Standard Specifications. Cost included with Structure Excavation

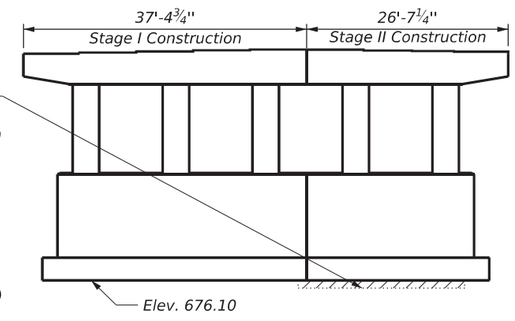

STAGE II CONSTRUCTION

(Looking North)
(Horizontal Dimensions shown along ℄ of Pier)

BILL OF MATERIAL

Item	Unit	Total
Temporary Support System	Each	4

MODEL: 07-Pier Staging Details
FILE NAME: C:\OneDrive\Greene & Bradford Inc\G&B - Projects\2021\2102.01 WO# 3 74705 PTB 201-037 Sub to HLR Effingham Phase I & II D"\IDOT\Structures\SN 058-0140 SquareCap 08-05.dgn

GREENE & BRADFORD, INC.
OF SPRINGFIELD
CONSULTING ENGINEERS
3501 CONSTITUTION DRIVE
SPRINGFIELD, ILLINOIS 62711
PROFESSIONAL DESIGN FIRM NO. 184-001179
PROFESSIONAL LAND SURVEYING FIRM NO. 0484000068
(217) 753-8894, FIX-4227 (F)

USER NAME = KashifSyed	DESIGNED - MAC	REVISED -	
	CHECKED - KAS	REVISED -	
PLOT SCALE =	DRAWN - SKC	REVISED -	
PLOT DATE = 9/2/2025	CHECKED - KAS	REVISED -	

STATE OF ILLINOIS
DEPARTMENT OF TRANSPORTATION

STAGE CONSTRUCTION DETAILS
S.N. 058-0139 & 058-0140

SHEET 7 OF 70 SHEETS

F.A.I. RTE.	SECTION	COUNTY	TOTAL SHEETS	SHEET NO.
72	(58-63HVB)BR	MACON	122	47

CONTRACT NO. 74705

ILLINOIS | FED. AID PROJECT

9/2/2025 12:05:03 PM

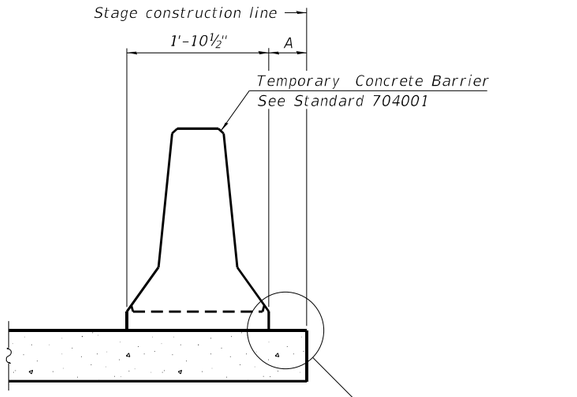

When "A" is 3'-1" or less, the temporary concrete barrier shall be restrained to the new slab according to Detail I, II or III. No restraint is required when "A" is greater than 3'-1".

NEW SLAB OR NEW DECK BEAM

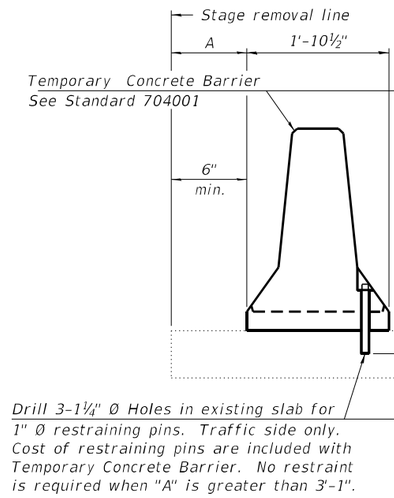

EXISTING SLAB

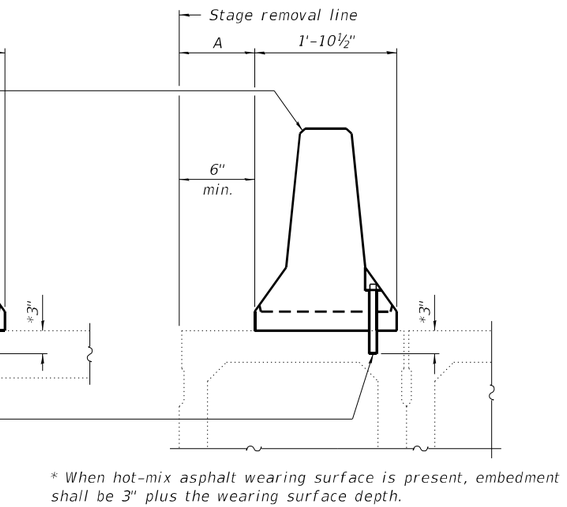

EXISTING DECK BEAM

SECTIONS THRU SLAB OR DECK BEAM

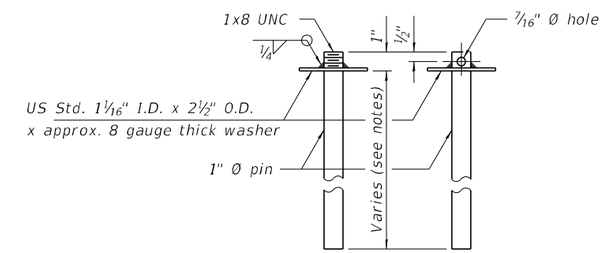

RESTRAINING PIN

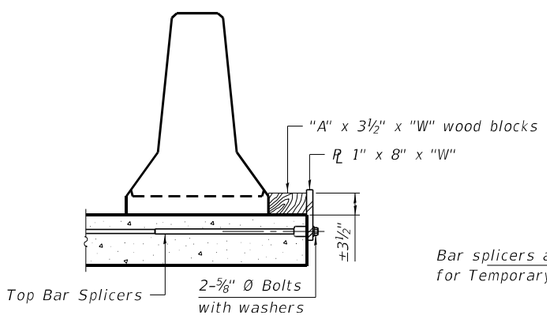

DETAIL I

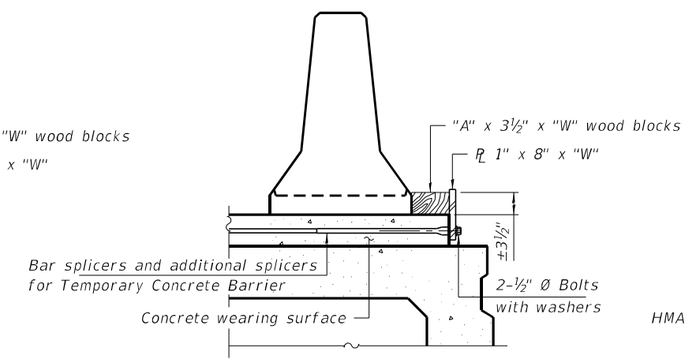

DETAIL II

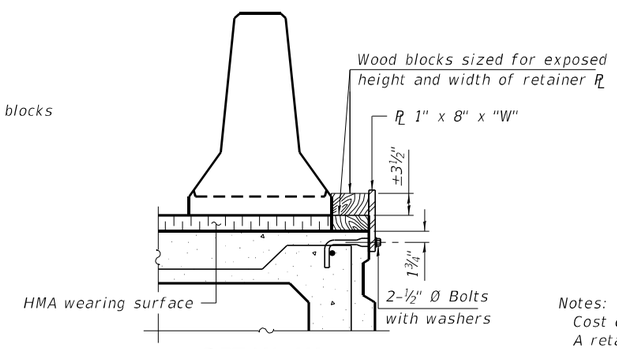

DETAIL III

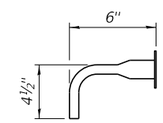

BAR SPLICER FOR #4 BAR - DETAIL III

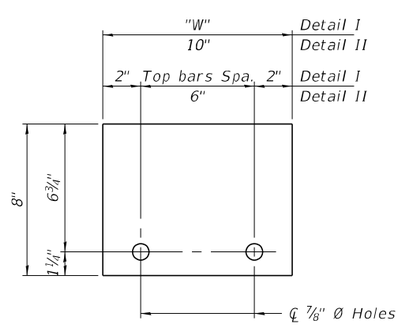

STEEL RETAINER PL 1" x 8" x "W"

(Detail I and II)

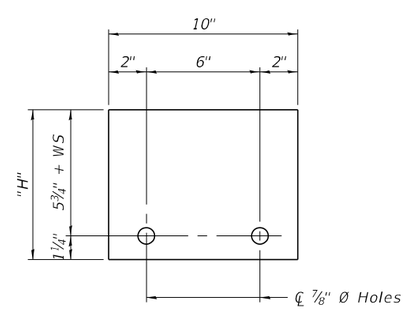

STEEL RETAINER PL 1" x "H" x 10"

(Detail III)

Notes:

Cost of retainer assembly is included with Temporary Concrete Barrier.

A retainer assembly shall be located at the approximate ℄ of each temporary concrete barrier.

The retainer plate shall not be removed until the concrete on the adjacent stage is ready to be poured. For Detail III applications the retainer plate shall not be removed until just prior to placing the adjacent beam.

When the 'A' dimension is less than 1½", the wood block shall be omitted and the barrier shall be placed in direct contact with the steel retainer plate. For deck beam applications the minimum required 'A' distance is 6" to accommodate the shear key clamping device.

Detail I - Installation for a new bridge deck or bridge slab.

Detail II - Installation for a new deck beam with an initial concrete wearing surface. Additional bar splicers shall be provided at 6'-0" centers and paired with the bar splicers of the concrete wearing surface reinforcement to accommodate the installation of the retainer assemblies. The cost of the additional bar splicers is included with the concrete wearing surface.

Detail III - Installation for a new deck beam with no initial wearing surface or with an initial hot-mix asphalt (HMA) wearing surface present. The deck beam directly beneath the temporary concrete barrier shall be fabricated with bar splicer inserts in the side of the beam, as detailed, to accommodate the installation of the retainer assemblies. A pair of bar splicers, 6" apart, shall be placed at 6'-0" centers along the length of the beam. The cost of the bar splicers is included with the deck beam.

RAILING CRITERIA

NCHRP 350 Test Level	3
Railing Weight (plf)	440

R-27

5-15-2023

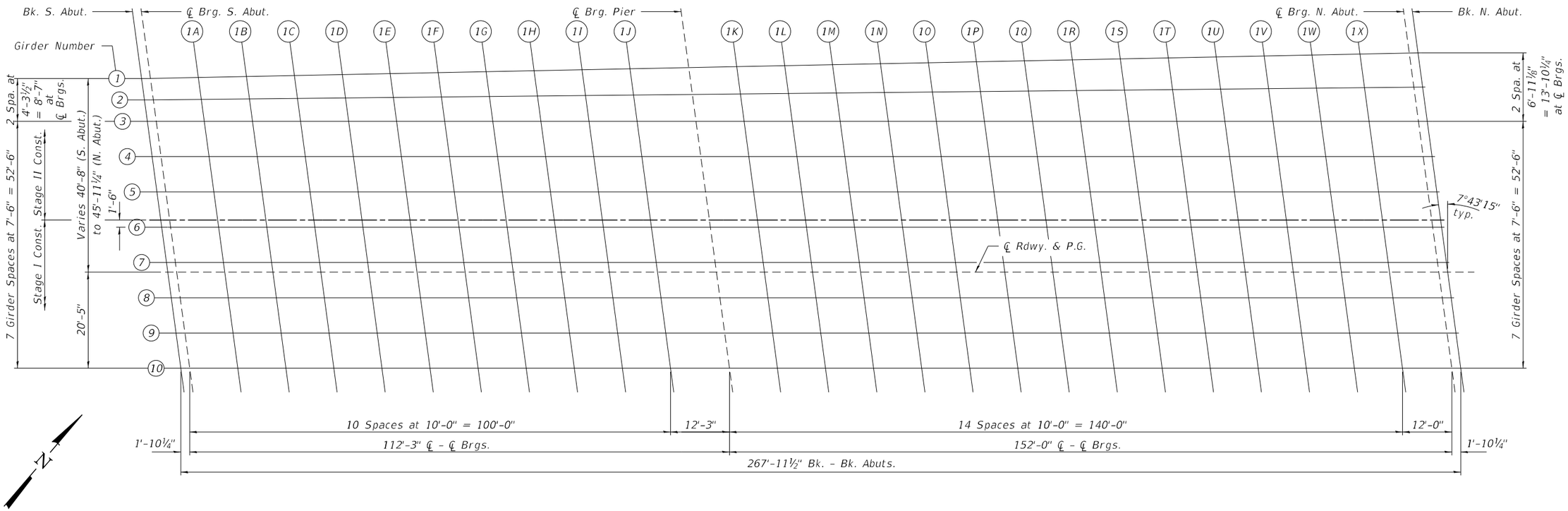

PLAN

(SN 058-0140 W.B.)

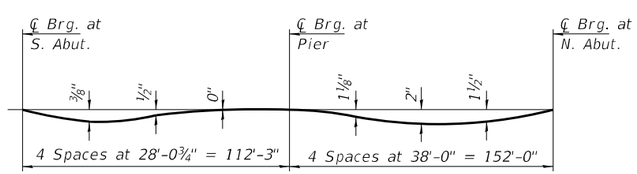

DEAD LOAD DEFLECTION DIAGRAM
GIRDERS 1 AND 2

(Includes weight of concrete only.)

Note:
The above deflections are not to be used in the field if the engineer is working from the grade elevations adjusted for dead load deflections and grinding as shown on sheets 11 thru 14 of 70.

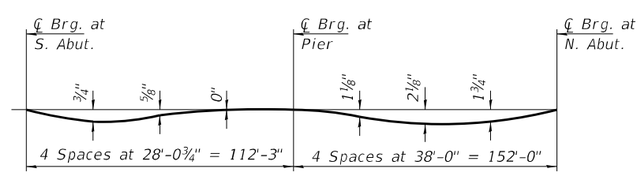

DEAD LOAD DEFLECTION DIAGRAM
GIRDERS 3 THRU 10

(Includes weight of concrete only.)

Note:
The above deflections are not to be used in the field if the engineer is working from the grade elevations adjusted for dead load deflections and grinding as shown on sheets 11 thru 14 of 70.

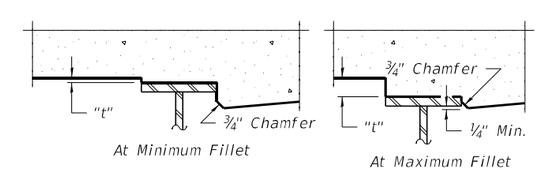

To determine "t": After all structural steel has been erected, elevations of the top flanges of the beams shall be taken at intervals shown above. These elevations subtracted from the "Theoretical Grade Elevations Adjusted for Dead Load Deflection and Grinding" shown on sheets 11 thru 14 of 70 minus 8¼" deck thickness, equals the fillet heights "t" above top flange of beams.

The slab is to be ground after curing to achieve smoothness but the slab is not to be ground to elevations below the "Theoretical Grade Elevations" shown on sheets 11 thru 14 of 70. For grinding the deck, see Special Provisions.

FILLET HEIGHTS

FILE NAME = 190501-sht-bridge.dgn	USER NAME = rhosick	DESIGNED - S.M.S.	REVISED -	STATE OF ILLINOIS DEPARTMENT OF TRANSPORTATION	TOP OF SLAB ELEVATIONS - W.B. SN 058-0139(E.B.) & 058-0140(W.B.)	F.A.I.	SECTION	COUNTY	TOTAL SHEETS / SHEET NO.
HAMPTON, LENZINI AND RENWICK, INC. 3085 STEVENSON DRIVE, SUITE 201 SPRINGFIELD, ILLINOIS 62703		CHECKED - S.W.M.	REVISED -			72	(58-63HVB)BR	MACON	122 / 49
ILLINOIS PROFESSIONAL DESIGN FIRM LS / PE / SE CORP. 184.000959	PLOT SCALE =	DRAWN - R.D.H.	REVISED -					CONTRACT NO. 74705	
	PLOT DATE = 8/21/2025	CHECKED - S.M.S.	REVISED -		SHEET NO. 9 OF 70 SHEETS			ILLINOIS FED. AID PROJECT	

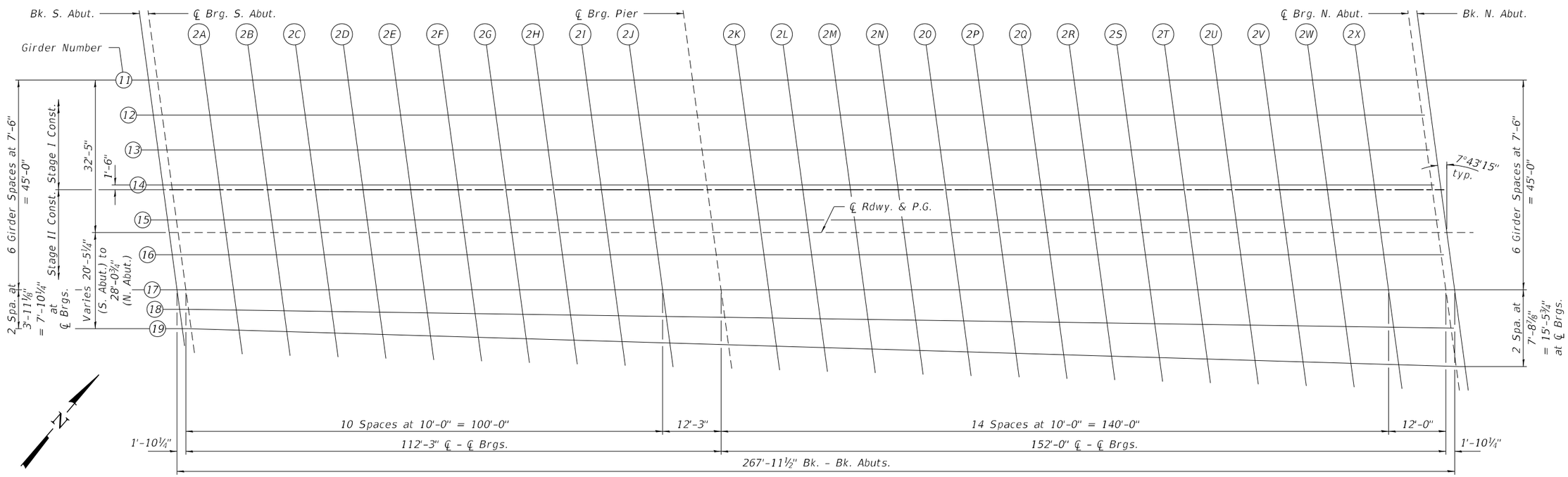

PLAN

(SN 058-0139 E.B.)

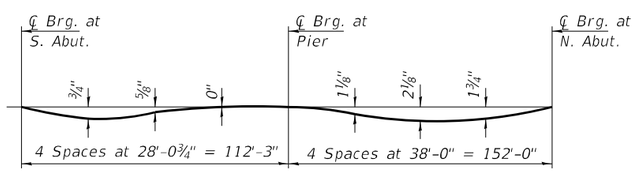

DEAD LOAD DEFLECTION DIAGRAM
GIRDERS 11 THRU 17

(Includes weight of concrete only.)

Note:
The above deflections are not to be used in the field if the engineer is working from the grade elevations adjusted for dead load deflections and grinding as shown on sheets 15 thru 18 of 70.

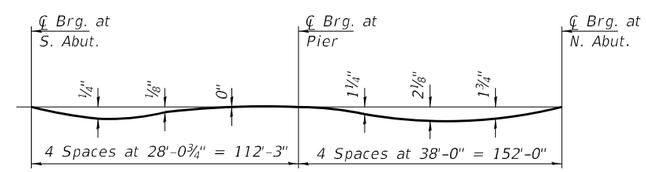

DEAD LOAD DEFLECTION DIAGRAM
GIRDERS 18 AND 19

(Includes weight of concrete only.)

Note:
The above deflections are not to be used in the field if the engineer is working from the grade elevations adjusted for dead load deflections and grinding as shown on sheets 15 thru 18 of 70.

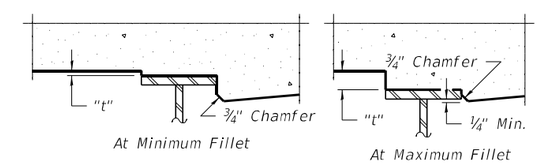

To determine "t": After all structural steel has been erected, elevations of the top flanges of the beams shall be taken at intervals shown above. These elevations subtracted from the "Theoretical Grade Elevations Adjusted for Dead Load Deflection and Grinding" shown on sheets 15 thru 18 of 70 minus 8¼" deck thickness, equals the fillet heights "t" above top flange of beams.

The slab is to be ground after curing to achieve smoothness but the slab is not to be ground to elevations below the "Theoretical Grade Elevations" shown on sheets 15 thru 18 of 70. For grinding the deck, see Special Provisions.

FILLET HEIGHTS

FILE NAME = 190501-sht-bridge.dgn	USER NAME = rhosick	DESIGNED - S.M.S.	REVISED -	STATE OF ILLINOIS DEPARTMENT OF TRANSPORTATION	TOP OF SLAB ELEVATIONS - EB SN 058-0139(E.B.) & 058-0140(W.B.)	F.A.I.	SECTION	COUNTY	TOTAL SHEETS	SHEET NO.
HAMPTON, LENZINI AND RENWICK, INC. 3045 STEVENSON DRIVE, SUITE 201 SPRINGFIELD, ILLINOIS 62703		CHECKED - S.W.M.	REVISED -			72	(58-63HVB)BR	MACON	122	50
	PLOT SCALE =	DRAWN - R.D.H.	REVISED -					CONTRACT NO. 74705		
ILLINOIS PROFESSIONAL DESIGN FIRM LS / PE / SE CORP. 184.000959	PLOT DATE = 8/21/2025	CHECKED - S.M.S.	REVISED -		SHEET NO. 10 OF 70 SHEETS			ILLINOIS FED. AID PROJECT		

GIRDER 1

Location	Station	Offset	Theoretical Grade Elevations	Theoretical Grade Elevations Adjusted For Dead Load Deflection And Grinding
Bk. S. Abut.	722+61.20	-40.63	712.58	712.60
℄ Brg. S. Abut.	722+63.05	-40.67	712.58	712.60
1A	722+73.02	-40.87	712.60	712.64
1B	722+82.99	-41.07	712.62	712.67
1C	722+92.96	-41.27	712.63	712.69
1D	723+02.94	-41.46	712.64	712.70
1E	723+12.91	-41.66	712.65	712.70
1F	723+22.88	-41.86	712.65	712.69
1G	723+32.86	-42.06	712.65	712.68
1H	723+42.83	-42.26	712.65	712.66
1I	723+52.80	-42.46	712.64	712.64
1J	723+62.77	-42.66	712.63	712.63
℄ Brg. Pier	723+74.99	-42.91	712.61	712.63
1K	723+84.96	-43.11	712.59	712.63
1L	723+94.94	-43.31	712.56	712.63
1M	724+04.91	-43.50	712.54	712.63
1N	724+14.88	-43.70	712.50	712.63
1O	724+24.85	-43.90	712.47	712.62
1P	724+34.83	-44.10	712.43	712.60
1Q	724+44.80	-44.30	712.39	712.58
1R	724+54.77	-44.50	712.34	712.54
1S	724+64.74	-44.70	712.29	712.49
1T	724+74.72	-44.90	712.24	712.42
1U	724+84.69	-45.10	712.18	712.35
1V	724+94.66	-45.30	712.12	712.26
1W	725+04.64	-45.50	712.06	712.17
1X	725+14.61	-45.70	711.99	712.06
℄ Brg. N. Abut.	725+26.58	-45.94	711.91	711.93
Bk. N. Abut.	725+28.42	-45.98	711.89	711.91

GIRDER 2

Location	Station	Offset	Theoretical Grade Elevations	Theoretical Grade Elevations Adjusted For Dead Load Deflection And Grinding
Bk. S. Abut.	722+61.78	-36.36	712.66	712.68
℄ Brg. S. Abut.	722+63.63	-36.38	712.67	712.69
1A	722+73.61	-36.47	712.69	712.73
1B	722+83.60	-36.57	712.71	712.76
1C	722+93.59	-36.67	712.73	712.78
1D	723+03.57	-36.77	712.74	712.79
1E	723+13.56	-36.87	712.75	712.80
1F	723+23.55	-36.97	712.75	712.79
1G	723+33.53	-37.07	712.75	712.78
1H	723+43.52	-37.17	712.75	712.76
1I	723+53.51	-37.27	712.74	712.75
1J	723+63.49	-37.37	712.73	712.74
℄ Brg. Pier	723+75.73	-37.49	712.71	712.73
1K	723+85.71	-37.59	712.70	712.74
1L	723+95.70	-37.69	712.67	712.74
1M	724+05.68	-37.79	712.65	712.74
1N	724+15.67	-37.89	712.62	712.74
1O	724+25.66	-37.99	712.59	712.74
1P	724+35.64	-38.09	712.55	712.72
1Q	724+45.63	-38.19	712.51	712.69
1R	724+55.62	-38.29	712.46	712.66
1S	724+65.60	-38.39	712.42	712.61
1T	724+75.59	-38.49	712.37	712.55
1U	724+85.58	-38.59	712.31	712.47
1V	724+95.56	-38.69	712.25	712.39
1W	725+05.55	-38.79	712.19	712.30
1X	725+15.53	-38.89	712.12	712.19
℄ Brg. N. Abut.	725+27.52	-39.01	712.04	712.06
Bk. N. Abut.	725+29.37	-39.03	712.03	712.05

GIRDER 3

Location	Station	Offset	Theoretical Grade Elevations	Theoretical Grade Elevations Adjusted For Dead Load Deflection And Grinding
Bk. S. Abut.	722+62.36	-32.08	712.75	712.77
℄ Brg. S. Abut.	722+64.21	-32.08	712.75	712.78
1A	722+74.21	-32.08	712.78	712.83
1B	722+84.21	-32.08	712.80	712.88
1C	722+94.21	-32.08	712.82	712.91
1D	723+04.21	-32.08	712.83	712.93
1E	723+14.21	-32.08	712.84	712.93
1F	723+24.21	-32.08	712.85	712.92
1G	723+34.21	-32.08	712.85	712.90
1H	723+44.21	-32.08	712.85	712.88
1I	723+54.21	-32.08	712.84	712.86
1J	723+64.21	-32.08	712.84	712.85
℄ Brg. Pier	723+76.46	-32.08	712.82	712.84
1K	723+86.46	-32.08	712.80	712.85
1L	723+96.46	-32.08	712.78	712.85
1M	724+06.46	-32.08	712.76	712.86
1N	724+16.46	-32.08	712.73	712.86
1O	724+26.46	-32.08	712.70	712.86
1P	724+36.46	-32.08	712.67	712.85
1Q	724+46.46	-32.08	712.63	712.82
1R	724+56.46	-32.08	712.58	712.79
1S	724+66.46	-32.08	712.54	712.74
1T	724+76.46	-32.08	712.49	712.68
1U	724+86.46	-32.08	712.44	712.61
1V	724+96.46	-32.08	712.38	712.53
1W	725+06.46	-32.08	712.32	712.43
1X	725+16.46	-32.08	712.25	712.33
℄ Brg. N. Abut.	725+28.46	-32.08	712.17	712.19
Bk. N. Abut.	725+30.31	-32.08	712.16	712.18

F.A.I.	SECTION	COUNTY	TOTAL SHEETS	SHEET NO.
72	(58-63HVB)BR	MACON	122	51

CONTRACT NO. 74705

ILLINOIS FED. AID PROJECT

GIRDER 4

Location	Station	Offset	Theoretical Grade Elevations	Theoretical Grade Elevations Adjusted For Dead Load Deflection And Grinding
Bk. S. Abut.	722+63.37	-24.58	712.90	712.92
℄ Brg. S. Abut.	722+65.22	-24.58	712.91	712.93
1A	722+75.22	-24.58	712.93	712.98
1B	722+85.22	-24.58	712.95	713.03
1C	722+95.22	-24.58	712.97	713.06
1D	723+05.22	-24.58	712.98	713.08
1E	723+15.22	-24.58	712.99	713.08
1F	723+25.22	-24.58	713.00	713.07
1G	723+35.22	-24.58	713.00	713.05
1H	723+45.22	-24.58	713.00	713.03
1I	723+55.22	-24.58	712.99	713.01
1J	723+65.22	-24.58	712.99	713.00
℄ Brg. Pier	723+77.47	-24.58	712.97	712.99
1K	723+87.47	-24.58	712.95	712.99
1L	723+97.47	-24.58	712.93	713.00
1M	724+07.47	-24.58	712.91	713.01
1N	724+17.47	-24.58	712.88	713.01
1O	724+27.47	-24.58	712.85	713.01
1P	724+37.47	-24.58	712.81	712.99
1Q	724+47.47	-24.58	712.77	712.97
1R	724+57.47	-24.58	712.73	712.94
1S	724+67.47	-24.58	712.68	712.89
1T	724+77.47	-24.58	712.63	712.83
1U	724+87.47	-24.58	712.58	712.76
1V	724+97.47	-24.58	712.52	712.67
1W	725+07.47	-24.58	712.46	712.57
1X	725+17.47	-24.58	712.40	712.47
℄ Brg. N. Abut.	725+29.47	-24.58	712.31	712.33
Bk. N. Abut.	725+31.32	-24.58	712.30	712.32

GIRDER 5

Location	Station	Offset	Theoretical Grade Elevations	Theoretical Grade Elevations Adjusted For Dead Load Deflection And Grinding
Bk. S. Abut.	722+64.39	-17.08	713.06	713.08
℄ Brg. S. Abut.	722+66.24	-17.08	713.06	713.08
1A	722+76.24	-17.08	713.08	713.13
1B	722+86.24	-17.08	713.10	713.18
1C	722+96.24	-17.08	713.12	713.21
1D	723+06.24	-17.08	713.13	713.23
1E	723+16.24	-17.08	713.14	713.23
1F	723+26.24	-17.08	713.15	713.22
1G	723+36.24	-17.08	713.15	713.20
1H	723+46.24	-17.08	713.15	713.18
1I	723+56.24	-17.08	713.14	713.16
1J	723+66.24	-17.08	713.13	713.15
℄ Brg. Pier	723+78.49	-17.08	713.12	713.14
1K	723+88.49	-17.08	713.10	713.14
1L	723+98.49	-17.08	713.08	713.15
1M	724+08.49	-17.08	713.05	713.15
1N	724+18.49	-17.08	713.03	713.15
1O	724+28.49	-17.08	712.99	713.15
1P	724+38.49	-17.08	712.96	713.14
1Q	724+48.49	-17.08	712.92	713.12
1R	724+58.49	-17.08	712.88	713.08
1S	724+68.49	-17.08	712.83	713.03
1T	724+78.49	-17.08	712.78	712.97
1U	724+88.49	-17.08	712.72	712.90
1V	724+98.49	-17.08	712.67	712.82
1W	725+08.49	-17.08	712.60	712.72
1X	725+18.49	-17.08	712.54	712.61
℄ Brg. N. Abut.	725+30.49	-17.08	712.46	712.48
Bk. N. Abut.	725+32.34	-17.08	712.44	712.46

STAGE CONSTRUCTION LINE

Location	Station	Offset	Theoretical Grade Elevations	Theoretical Grade Elevations Adjusted For Dead Load Deflection And Grinding
Bk. S. Abut.	722+65.21	-11.08	713.17	713.19
℄ Brg. S. Abut.	722+67.06	-11.08	713.18	713.20
1A	722+77.06	-11.08	713.20	713.25
1B	722+87.06	-11.08	713.22	713.30
1C	722+97.06	-11.08	713.24	713.33
1D	723+07.06	-11.08	713.25	713.35
1E	723+17.06	-11.08	713.26	713.35
1F	723+27.06	-11.08	713.26	713.34
1G	723+37.06	-11.08	713.27	713.32
1H	723+47.06	-11.08	713.26	713.30
1I	723+57.06	-11.08	713.26	713.28
1J	723+67.06	-11.08	713.25	713.26
℄ Brg. Pier	723+79.31	-11.08	713.23	713.25
1K	723+89.31	-11.08	713.21	713.26
1L	723+99.31	-11.08	713.19	713.26
1M	724+09.31	-11.08	713.17	713.27
1N	724+19.31	-11.08	713.14	713.27
1O	724+29.31	-11.08	713.11	713.26
1P	724+39.31	-11.08	713.07	713.25
1Q	724+49.31	-11.08	713.03	713.23
1R	724+59.31	-11.08	712.99	713.19
1S	724+69.31	-11.08	712.94	713.15
1T	724+79.31	-11.08	712.89	713.08
1U	724+89.31	-11.08	712.84	713.01
1V	724+99.31	-11.08	712.78	712.93
1W	725+09.31	-11.08	712.71	712.83
1X	725+19.31	-11.08	712.65	712.72
℄ Brg. N. Abut.	725+31.31	-11.08	712.57	712.59
Bk. N. Abut.	725+33.16	-11.08	712.55	712.57

F.A.I.	SECTION	COUNTY	TOTAL SHEETS	SHEET NO.
72	(58-63HVB)BR	MACON	122	52

GIRDER 6

Location	Station	Offset	Theoretical Grade Elevations	Theoretical Grade Elevations Adjusted For Dead Load Deflection And Grinding
Bk. S. Abut.	722+65.41	-9.58	713.20	713.22
℄ Brg. S. Abut.	722+67.26	-9.58	713.20	713.22
1A	722+77.26	-9.58	713.22	713.28
1B	722+87.26	-9.58	713.24	713.32
1C	722+97.26	-9.58	713.26	713.35
1D	723+07.26	-9.58	713.27	713.37
1E	723+17.26	-9.58	713.28	713.37
1F	723+27.26	-9.58	713.29	713.36
1G	723+37.26	-9.58	713.29	713.34
1H	723+47.26	-9.58	713.29	713.32
1I	723+57.26	-9.58	713.28	713.30
1J	723+67.26	-9.58	713.27	713.28
℄ Brg. Pier	723+79.51	-9.58	713.25	713.28
1K	723+89.51	-9.58	713.24	713.28
1L	723+99.51	-9.58	713.22	713.28
1M	724+09.51	-9.58	713.19	713.29
1N	724+19.51	-9.58	713.16	713.29
1O	724+29.51	-9.58	713.13	713.29
1P	724+39.51	-9.58	713.09	713.27
1Q	724+49.51	-9.58	713.05	713.25
1R	724+59.51	-9.58	713.01	713.22
1S	724+69.51	-9.58	712.96	713.17
1T	724+79.51	-9.58	712.91	713.11
1U	724+89.51	-9.58	712.86	713.03
1V	724+99.51	-9.58	712.80	712.95
1W	725+09.51	-9.58	712.74	712.85
1X	725+19.51	-9.58	712.67	712.74
℄ Brg. N. Abut.	725+31.51	-9.58	712.59	712.61
Bk. N. Abut.	725+33.36	-9.58	712.57	712.59

GIRDER 7

Location	Station	Offset	Theoretical Grade Elevations	Theoretical Grade Elevations Adjusted For Dead Load Deflection And Grinding
Bk. S. Abut.	722+66.43	-2.08	713.31	713.33
℄ Brg. S. Abut.	722+68.28	-2.08	713.32	713.34
1A	722+78.28	-2.08	713.34	713.39
1B	722+88.28	-2.08	713.36	713.43
1C	722+98.28	-2.08	713.37	713.46
1D	723+08.28	-2.08	713.39	713.48
1E	723+18.28	-2.08	713.40	713.48
1F	723+28.28	-2.08	713.40	713.47
1G	723+38.28	-2.08	713.40	713.46
1H	723+48.28	-2.08	713.40	713.43
1I	723+58.28	-2.08	713.39	713.41
1J	723+68.28	-2.08	713.38	713.39
℄ Brg. Pier	723+80.53	-2.08	713.37	713.39
1K	723+90.53	-2.08	713.35	713.39
1L	724+00.53	-2.08	713.33	713.39
1M	724+10.53	-2.08	713.30	713.40
1N	724+20.53	-2.08	713.27	713.40
1O	724+30.53	-2.08	713.24	713.40
1P	724+40.53	-2.08	713.20	713.38
1Q	724+50.53	-2.08	713.16	713.36
1R	724+60.53	-2.08	713.12	713.32
1S	724+70.53	-2.08	713.07	713.27
1T	724+80.53	-2.08	713.02	713.21
1U	724+90.53	-2.08	712.96	713.14
1V	725+00.53	-2.08	712.90	713.05
1W	725+10.53	-2.08	712.84	712.96
1X	725+20.53	-2.08	712.78	712.85
℄ Brg. N. Abut.	725+32.53	-2.08	712.69	712.71
Bk. N. Abut.	725+34.38	-2.08	712.68	712.70

℄ ROADWAY & P.G.L.

Location	Station	Offset	Theoretical Grade Elevations	Theoretical Grade Elevations Adjusted For Dead Load Deflection And Grinding
Bk. S. Abut.	722+66.71	0.00	713.34	713.36
℄ Brg. S. Abut.	722+68.56	0.00	713.35	713.37
1A	722+78.56	0.00	713.37	713.42
1B	722+88.56	0.00	713.39	713.46
1C	722+98.56	0.00	713.41	713.50
1D	723+08.56	0.00	713.42	713.51
1E	723+18.56	0.00	713.43	713.52
1F	723+28.56	0.00	713.43	713.51
1G	723+38.56	0.00	713.43	713.49
1H	723+48.56	0.00	713.43	713.46
1I	723+58.56	0.00	713.42	713.44
1J	723+68.56	0.00	713.41	713.43
℄ Brg. Pier	723+80.81	0.00	713.40	713.42
1K	723+90.81	0.00	713.38	713.42
1L	724+00.81	0.00	713.36	713.42
1M	724+10.81	0.00	713.33	713.43
1N	724+20.81	0.00	713.30	713.43
1O	724+30.81	0.00	713.27	713.43
1P	724+40.81	0.00	713.23	713.41
1Q	724+50.81	0.00	713.19	713.39
1R	724+60.81	0.00	713.15	713.35
1S	724+70.81	0.00	713.10	713.30
1T	724+80.81	0.00	713.05	713.24
1U	724+90.81	0.00	712.99	713.17
1V	725+00.81	0.00	712.93	713.08
1W	725+10.81	0.00	712.87	712.99
1X	725+20.81	0.00	712.81	712.88
℄ Brg. N. Abut.	725+32.81	0.00	712.72	712.74
Bk. N. Abut.	725+34.66	0.00	712.71	712.73

GIRDER 8

Location	Station	Offset	Theoretical Grade Elevations	Theoretical Grade Elevations Adjusted For Dead Load Deflection And Grinding
Bk. S. Abut.	722+67.44	5.42	713.26	713.28
℄ Brg. S. Abut.	722+69.29	5.42	713.27	713.29
1A	722+79.29	5.42	713.29	713.34
1B	722+89.29	5.42	713.31	713.38
1C	722+99.29	5.42	713.33	713.42
1D	723+09.29	5.42	713.34	713.43
1E	723+19.29	5.42	713.35	713.43
1F	723+29.29	5.42	713.35	713.42
1G	723+39.29	5.42	713.35	713.41
1H	723+49.29	5.42	713.35	713.38
1I	723+59.29	5.42	713.34	713.36
1J	723+69.29	5.42	713.33	713.34
℄ Brg. Pier	723+81.54	5.42	713.31	713.33
1K	723+91.54	5.42	713.29	713.34
1L	724+01.54	5.42	713.27	713.34
1M	724+11.54	5.42	713.25	713.34
1N	724+21.54	5.42	713.22	713.35
1O	724+31.54	5.42	713.18	713.34
1P	724+41.54	5.42	713.15	713.33
1Q	724+51.54	5.42	713.11	713.30
1R	724+61.54	5.42	713.06	713.27
1S	724+71.54	5.42	713.01	713.22
1T	724+81.54	5.42	712.96	713.16
1U	724+91.54	5.42	712.91	713.08
1V	725+01.54	5.42	712.85	713.00
1W	725+11.54	5.42	712.79	712.90
1X	725+21.54	5.42	712.72	712.79
℄ Brg. N. Abut.	725+33.54	5.42	712.63	712.66
Bk. N. Abut.	725+35.39	5.42	712.62	712.64

GIRDER 9

Location	Station	Offset	Theoretical Grade Elevations	Theoretical Grade Elevations Adjusted For Dead Load Deflection And Grinding
Bk. S. Abut.	722+68.46	12.92	713.15	713.17
℄ Brg. S. Abut.	722+70.31	12.92	713.15	713.17
1A	722+80.31	12.92	713.18	713.23
1B	722+90.31	12.92	713.19	713.27
1C	723+00.31	12.92	713.21	713.30
1D	723+10.31	12.92	713.22	713.32
1E	723+20.31	12.92	713.23	713.32
1F	723+30.31	12.92	713.23	713.31
1G	723+40.31	12.92	713.23	713.29
1H	723+50.31	12.92	713.23	713.26
1I	723+60.31	12.92	713.22	713.24
1J	723+70.31	12.92	713.21	713.22
℄ Brg. Pier	723+82.56	12.92	713.19	713.22
1K	723+92.56	12.92	713.18	713.22
1L	724+02.56	12.92	713.15	713.22
1M	724+12.56	12.92	713.13	713.22
1N	724+22.56	12.92	713.10	713.23
1O	724+32.56	12.92	713.06	713.22
1P	724+42.56	12.92	713.03	713.21
1Q	724+52.56	12.92	712.99	713.18
1R	724+62.56	12.92	712.94	713.15
1S	724+72.56	12.92	712.89	713.10
1T	724+82.56	12.92	712.84	713.04
1U	724+92.56	12.92	712.78	712.96
1V	725+02.56	12.92	712.73	712.87
1W	725+12.56	12.92	712.66	712.78
1X	725+22.56	12.92	712.60	712.67
℄ Brg. N. Abut.	725+34.56	12.92	712.51	712.53
Bk. N. Abut.	725+36.41	12.92	712.50	712.52

GIRDER 10

Location	Station	Offset	Theoretical Grade Elevations	Theoretical Grade Elevations Adjusted For Dead Load Deflection And Grinding
Bk. S. Abut.	722+69.48	20.42	713.00	713.02
℄ Brg. S. Abut.	722+71.33	20.42	713.01	713.03
1A	722+81.33	20.42	713.03	713.08
1B	722+91.33	20.42	713.05	713.12
1C	723+01.33	20.42	713.06	713.15
1D	723+11.33	20.42	713.07	713.17
1E	723+21.33	20.42	713.08	713.17
1F	723+31.33	20.42	713.08	713.16
1G	723+41.33	20.42	713.08	713.14
1H	723+51.33	20.42	713.08	713.11
1I	723+61.33	20.42	713.07	713.09
1J	723+71.33	20.42	713.06	713.07
℄ Brg. Pier	723+83.58	20.42	713.04	713.06
1K	723+93.58	20.42	713.02	713.06
1L	724+03.58	20.42	713.00	713.07
1M	724+13.58	20.42	712.97	713.07
1N	724+23.58	20.42	712.94	713.07
1O	724+33.58	20.42	712.91	713.07
1P	724+43.58	20.42	712.87	713.05
1Q	724+53.58	20.42	712.83	713.03
1R	724+63.58	20.42	712.79	712.99
1S	724+73.58	20.42	712.74	712.94
1T	724+83.58	20.42	712.68	712.88
1U	724+93.58	20.42	712.63	712.80
1V	725+03.58	20.42	712.57	712.72
1W	725+13.58	20.42	712.51	712.62
1X	725+23.58	20.42	712.44	712.51
℄ Brg. N. Abut.	725+35.58	20.42	712.35	712.37
Bk. N. Abut.	725+37.43	20.42	712.34	712.36

F.A.I.	SECTION	COUNTY	TOTAL SHEETS	SHEET NO.
72	(58-63HVB)BR	MACON	122	54

CONTRACT NO. 74705

ILLINOIS FED. AID PROJECT

GIRDER 11

Location	Station	Offset	Theoretical Grade Elevations	Theoretical Grade Elevations Adjusted For Dead Load Deflection And Grinding
Bk. S. Abut.	722+77.50	-32.42	712.78	712.80
℄ Brg. S. Abut.	722+79.35	-32.42	712.78	712.81
2A	722+89.35	-32.42	712.80	712.85
2B	722+99.35	-32.42	712.82	712.89
2C	723+09.35	-32.42	712.83	712.92
2D	723+19.35	-32.42	712.84	712.93
2E	723+29.35	-32.42	712.84	712.93
2F	723+39.35	-32.42	712.84	712.92
2G	723+49.35	-32.42	712.84	712.89
2H	723+59.35	-32.42	712.83	712.87
2I	723+69.35	-32.42	712.82	712.84
2J	723+79.35	-32.42	712.81	712.82
℄ Brg. Pier	723+91.60	-32.42	712.79	712.81
2K	724+01.60	-32.42	712.77	712.81
2L	724+11.60	-32.42	712.74	712.81
2M	724+21.60	-32.42	712.71	712.81
2N	724+31.60	-32.42	712.68	712.81
2O	724+41.60	-32.42	712.64	712.80
2P	724+51.60	-32.42	712.60	712.78
2Q	724+61.60	-32.42	712.55	712.75
2R	724+71.60	-32.42	712.51	712.71
2S	724+81.60	-32.42	712.46	712.66
2T	724+91.60	-32.42	712.40	712.60
2U	725+01.60	-32.42	712.34	712.52
2V	725+11.60	-32.42	712.28	712.43
2W	725+21.60	-32.42	712.21	712.33
2X	725+31.60	-32.42	712.14	712.22
℄ Brg. N. Abut.	725+43.60	-32.42	712.05	712.07
Bk. N. Abut.	725+45.45	-32.42	712.04	712.06

GIRDER 12

Location	Station	Offset	Theoretical Grade Elevations	Theoretical Grade Elevations Adjusted For Dead Load Deflection And Grinding
Bk. S. Abut.	722+78.51	-24.92	712.93	712.95
℄ Brg. S. Abut.	722+80.36	-24.92	712.94	712.96
2A	722+90.36	-24.92	712.96	713.01
2B	723+00.36	-24.92	712.97	713.04
2C	723+10.36	-24.92	712.98	713.07
2D	723+20.36	-24.92	712.99	713.08
2E	723+30.36	-24.92	712.99	713.08
2F	723+40.36	-24.92	712.99	713.07
2G	723+50.36	-24.92	712.99	713.04
2H	723+60.36	-24.92	712.98	713.02
2I	723+70.36	-24.92	712.97	712.99
2J	723+80.36	-24.92	712.96	712.97
℄ Brg. Pier	723+92.61	-24.92	712.94	712.96
2K	724+02.61	-24.92	712.91	712.95
2L	724+12.61	-24.92	712.89	712.95
2M	724+22.61	-24.92	712.86	712.95
2N	724+32.61	-24.92	712.82	712.95
2O	724+42.61	-24.92	712.79	712.94
2P	724+52.61	-24.92	712.74	712.93
2Q	724+62.61	-24.92	712.70	712.90
2R	724+72.61	-24.92	712.65	712.86
2S	724+82.61	-24.92	712.60	712.81
2T	724+92.61	-24.92	712.54	712.74
2U	725+02.61	-24.92	712.48	712.66
2V	725+12.61	-24.92	712.42	712.57
2W	725+22.61	-24.92	712.35	712.47
2X	725+32.61	-24.92	712.28	712.36
℄ Brg. N. Abut.	725+44.61	-24.92	712.19	712.22
Bk. N. Abut.	725+46.46	-24.92	712.18	712.20

GIRDER 13

Location	Station	Offset	Theoretical Grade Elevations	Theoretical Grade Elevations Adjusted For Dead Load Deflection And Grinding
Bk. S. Abut.	722+79.53	-17.42	713.08	713.11
℄ Brg. S. Abut.	722+81.38	-17.42	713.09	713.11
2A	722+91.38	-17.42	713.11	713.16
2B	723+01.38	-17.42	713.12	713.20
2C	723+11.38	-17.42	713.13	713.22
2D	723+21.38	-17.42	713.14	713.23
2E	723+31.38	-17.42	713.14	713.23
2F	723+41.38	-17.42	713.14	713.22
2G	723+51.38	-17.42	713.14	713.19
2H	723+61.38	-17.42	713.13	713.17
2I	723+71.38	-17.42	713.12	713.14
2J	723+81.38	-17.42	713.11	713.12
℄ Brg. Pier	723+93.63	-17.42	713.08	713.10
2K	724+03.63	-17.42	713.06	713.10
2L	724+13.63	-17.42	713.03	713.10
2M	724+23.63	-17.42	713.00	713.10
2N	724+33.63	-17.42	712.97	713.10
2O	724+43.63	-17.42	712.93	713.09
2P	724+53.63	-17.42	712.89	713.07
2Q	724+63.63	-17.42	712.85	713.04
2R	724+73.63	-17.42	712.80	713.00
2S	724+83.63	-17.42	712.74	712.95
2T	724+93.63	-17.42	712.69	712.88
2U	725+03.63	-17.42	712.63	712.80
2V	725+13.63	-17.42	712.56	712.71
2W	725+23.63	-17.42	712.50	712.61
2X	725+33.63	-17.42	712.43	712.50
℄ Brg. N. Abut.	725+45.63	-17.42	712.34	712.36
Bk. N. Abut.	725+47.48	-17.42	712.32	712.34

GIRDER 14

Location	Station	Offset	Theoretical Grade Elevations	Theoretical Grade Elevations Adjusted For Dead Load Deflection And Grinding
Bk. S. Abut.	722+80.55	-9.92	713.23	713.25
℄ Brg. S. Abut.	722+82.40	-9.92	713.23	713.25
2A	722+92.40	-9.92	713.25	713.30
2B	723+02.40	-9.92	713.26	713.34
2C	723+12.40	-9.92	713.27	713.36
2D	723+22.40	-9.92	713.28	713.37
2E	723+32.40	-9.92	713.28	713.37
2F	723+42.40	-9.92	713.28	713.36
2G	723+52.40	-9.92	713.28	713.33
2H	723+62.40	-9.92	713.27	713.30
2I	723+72.40	-9.92	713.26	713.28
2J	723+82.40	-9.92	713.24	713.26
℄ Brg. Pier	723+94.65	-9.92	713.22	713.24
2K	724+04.65	-9.92	713.20	713.24
2L	724+14.65	-9.92	713.17	713.24
2M	724+24.65	-9.92	713.14	713.24
2N	724+34.65	-9.92	713.11	713.23
2O	724+44.65	-9.92	713.07	713.22
2P	724+54.65	-9.92	713.03	713.21
2Q	724+64.65	-9.92	712.98	713.18
2R	724+74.65	-9.92	712.93	713.14
2S	724+84.65	-9.92	712.88	713.08
2T	724+94.65	-9.92	712.82	713.02
2U	725+04.65	-9.92	712.76	712.94
2V	725+14.65	-9.92	712.70	712.85
2W	725+24.65	-9.92	712.63	712.74
2X	725+34.65	-9.92	712.56	712.63
℄ Brg. N. Abut.	725+46.65	-9.92	712.47	712.49
Bk. N. Abut.	725+48.50	-9.92	712.45	712.48

STAGE CONSTRUCTION LINE

Location	Station	Offset	Theoretical Grade Elevations	Theoretical Grade Elevations Adjusted For Dead Load Deflection And Grinding
Bk. S. Abut.	722+80.75	-8.42	713.25	713.27
℄ Brg. S. Abut.	722+82.60	-8.42	713.25	713.27
2A	722+92.60	-8.42	713.27	713.32
2B	723+02.60	-8.42	713.29	713.36
2C	723+12.60	-8.42	713.30	713.39
2D	723+22.60	-8.42	713.30	713.40
2E	723+32.60	-8.42	713.31	713.39
2F	723+42.60	-8.42	713.31	713.38
2G	723+52.60	-8.42	713.30	713.36
2H	723+62.60	-8.42	713.29	713.33
2I	723+72.60	-8.42	713.28	713.30
2J	723+82.60	-8.42	713.27	713.28
℄ Brg. Pier	723+94.85	-8.42	713.24	713.26
2K	724+04.85	-8.42	713.22	713.26
2L	724+14.85	-8.42	713.19	713.26
2M	724+24.85	-8.42	713.16	713.26
2N	724+34.85	-8.42	713.13	713.26
2O	724+44.85	-8.42	713.09	713.25
2P	724+54.85	-8.42	713.05	713.23
2Q	724+64.85	-8.42	713.00	713.20
2R	724+74.85	-8.42	712.95	713.16
2S	724+84.85	-8.42	712.90	713.11
2T	724+94.85	-8.42	712.84	713.04
2U	725+04.85	-8.42	712.78	712.96
2V	725+14.85	-8.42	712.72	712.87
2W	725+24.85	-8.42	712.65	712.77
2X	725+34.85	-8.42	712.58	712.65
℄ Brg. N. Abut.	725+46.85	-8.42	712.49	712.51
Bk. N. Abut.	725+48.70	-8.42	712.48	712.50

GIRDER 15

Location	Station	Offset	Theoretical Grade Elevations	Theoretical Grade Elevations Adjusted For Dead Load Deflection And Grinding
Bk. S. Abut.	722+81.56	-2.42	713.34	713.36
℄ Brg. S. Abut.	722+83.41	-2.42	713.34	713.37
2A	722+93.41	-2.42	713.36	713.41
2B	723+03.41	-2.42	713.38	713.45
2C	723+13.41	-2.42	713.39	713.48
2D	723+23.41	-2.42	713.39	713.49
2E	723+33.41	-2.42	713.40	713.48
2F	723+43.41	-2.42	713.40	713.47
2G	723+53.41	-2.42	713.39	713.44
2H	723+63.41	-2.42	713.38	713.42
2I	723+73.41	-2.42	713.37	713.39
2J	723+83.41	-2.42	713.36	713.37
℄ Brg. Pier	723+95.66	-2.42	713.33	713.35
2K	724+05.66	-2.42	713.31	713.35
2L	724+15.66	-2.42	713.28	713.35
2M	724+25.66	-2.42	713.25	713.35
2N	724+35.66	-2.42	713.21	713.34
2O	724+45.66	-2.42	713.18	713.33
2P	724+55.66	-2.42	713.13	713.31
2Q	724+65.66	-2.42	713.09	713.29
2R	724+75.66	-2.42	713.04	713.24
2S	724+85.66	-2.42	712.99	713.19
2T	724+95.66	-2.42	712.93	713.12
2U	725+05.66	-2.42	712.87	713.04
2V	725+15.66	-2.42	712.80	712.95
2W	725+25.66	-2.42	712.74	712.85
2X	725+35.66	-2.42	712.66	712.74
℄ Brg. N. Abut.	725+47.66	-2.42	712.57	712.59
Bk. N. Abut.	725+49.51	-2.42	712.56	712.58

℄ ROADWAY & P.G.L.

Location	Station	Offset	Theoretical Grade Elevations	Theoretical Grade Elevations Adjusted For Dead Load Deflection And Grinding
Bk. S. Abut.	722+81.89	0.00	713.38	713.40
℄ Brg. S. Abut.	722+83.74	0.00	713.38	713.40
2A	722+93.74	0.00	713.40	713.45
2B	723+03.74	0.00	713.41	713.49
2C	723+13.74	0.00	713.42	713.51
2D	723+23.74	0.00	713.43	713.52
2E	723+33.74	0.00	713.43	713.52
2F	723+43.74	0.00	713.43	713.51
2G	723+53.74	0.00	713.43	713.48
2H	723+63.74	0.00	713.42	713.45
2I	723+73.74	0.00	713.41	713.42
2J	723+83.74	0.00	713.39	713.40
℄ Brg. Pier	723+95.99	0.00	713.37	713.39
2K	724+05.99	0.00	713.34	713.38
2L	724+15.99	0.00	713.32	713.38
2M	724+25.99	0.00	713.28	713.38
2N	724+35.99	0.00	713.25	713.38
2O	724+45.99	0.00	713.21	713.37
2P	724+55.99	0.00	713.17	713.35
2Q	724+65.99	0.00	713.12	713.32
2R	724+75.99	0.00	713.07	713.28
2S	724+85.99	0.00	713.02	713.23
2T	724+95.99	0.00	712.96	713.16
2U	725+05.99	0.00	712.90	713.08
2V	725+15.99	0.00	712.84	712.99
2W	725+25.99	0.00	712.77	712.88
2X	725+35.99	0.00	712.70	712.77
℄ Brg. N. Abut.	725+47.99	0.00	712.61	712.63
Bk. N. Abut.	725+49.84	0.00	712.59	712.61

GIRDER 16

Location	Station	Offset	Theoretical Grade Elevations	Theoretical Grade Elevations Adjusted For Dead Load Deflection And Grinding
Bk. S. Abut.	722+82.58	5.08	713.30	713.32
℄ Brg. S. Abut.	722+84.43	5.08	713.31	713.33
2A	722+94.43	5.08	713.32	713.37
2B	723+04.43	5.08	713.34	713.41
2C	723+14.43	5.08	713.35	713.44
2D	723+24.43	5.08	713.35	713.45
2E	723+34.43	5.08	713.36	713.44
2F	723+44.43	5.08	713.35	713.43
2G	723+54.43	5.08	713.35	713.40
2H	723+64.43	5.08	713.34	713.37
2I	723+74.43	5.08	713.33	713.35
2J	723+84.43	5.08	713.31	713.33
℄ Brg. Pier	723+96.68	5.08	713.29	713.31
2K	724+06.68	5.08	713.26	713.31
2L	724+16.68	5.08	713.24	713.30
2M	724+26.68	5.08	713.21	713.30
2N	724+36.68	5.08	713.17	713.30
2O	724+46.68	5.08	713.13	713.29
2P	724+56.68	5.08	713.09	713.27
2Q	724+66.68	5.08	713.04	713.24
2R	724+76.68	5.08	712.99	713.20
2S	724+86.68	5.08	712.94	713.15
2T	724+96.68	5.08	712.88	713.08
2U	725+06.68	5.08	712.82	713.00
2V	725+16.68	5.08	712.76	712.91
2W	725+26.68	5.08	712.69	712.80
2X	725+36.68	5.08	712.62	712.69
℄ Brg. N. Abut.	725+48.68	5.08	712.53	712.55
Bk. N. Abut.	725+50.53	5.08	712.51	712.53

GIRDER 17

Location	Station	Offset	Theoretical Grade Elevations	Theoretical Grade Elevations Adjusted For Dead Load Deflection And Grinding
Bk. S. Abut.	722+83.60	12.58	713.19	713.21
℄ Brg. S. Abut.	722+85.45	12.58	713.19	713.21
2A	722+95.45	12.58	713.21	713.26
2B	723+05.45	12.58	713.22	713.30
2C	723+15.45	12.58	713.23	713.32
2D	723+25.45	12.58	713.24	713.33
2E	723+35.45	12.58	713.24	713.33
2F	723+45.45	12.58	713.24	713.31
2G	723+55.45	12.58	713.23	713.29
2H	723+65.45	12.58	713.23	713.26
2I	723+75.45	12.58	713.21	713.23
2J	723+85.45	12.58	713.20	713.21
℄ Brg. Pier	723+97.70	12.58	713.17	713.19
2K	724+07.70	12.58	713.15	713.19
2L	724+17.70	12.58	713.12	713.19
2M	724+27.70	12.58	713.09	713.18
2N	724+37.70	12.58	713.05	713.18
2O	724+47.70	12.58	713.01	713.17
2P	724+57.70	12.58	712.97	713.15
2Q	724+67.70	12.58	712.92	713.12
2R	724+77.70	12.58	712.87	713.08
2S	724+87.70	12.58	712.82	713.02
2T	724+97.70	12.58	712.76	712.96
2U	725+07.70	12.58	712.70	712.88
2V	725+17.70	12.58	712.63	712.78
2W	725+27.70	12.58	712.57	712.68
2X	725+37.70	12.58	712.49	712.57
℄ Brg. N. Abut.	725+49.70	12.58	712.40	712.42
Bk. N. Abut.	725+51.55	12.58	712.39	712.41

GIRDER 18

Location	Station	Offset	Theoretical Grade Elevations	Theoretical Grade Elevations Adjusted For Dead Load Deflection And Grinding
Bk. S. Abut.	722+84.13	16.49	713.11	713.13
℄ Brg. S. Abut.	722+85.98	16.52	713.12	713.14
2A	722+96.00	16.66	713.13	713.16
2B	723+06.02	16.81	713.14	713.18
2C	723+16.04	16.95	713.15	713.20
2D	723+26.06	17.09	713.15	713.20
2E	723+36.08	17.24	713.15	713.19
2F	723+46.10	17.38	713.14	713.17
2G	723+56.12	17.53	713.13	713.15
2H	723+66.14	17.67	713.12	713.13
2I	723+76.16	17.81	713.11	713.11
2J	723+86.17	17.96	713.09	713.09
℄ Brg. Pier	723+98.45	18.13	713.06	713.08
2K	724+08.47	18.28	713.03	713.08
2L	724+18.49	18.42	713.00	713.07
2M	724+28.51	18.57	712.96	713.07
2N	724+38.53	18.71	712.93	713.06
2O	724+48.55	18.85	712.88	713.05
2P	724+58.57	19.00	712.84	713.02
2Q	724+68.59	19.14	712.79	712.99
2R	724+78.60	19.29	712.73	712.94
2S	724+88.62	19.43	712.68	712.88
2T	724+98.64	19.57	712.62	712.81
2U	725+08.66	19.72	712.55	712.73
2V	725+18.68	19.86	712.48	712.63
2W	725+28.70	20.01	712.41	712.52
2X	725+38.72	20.15	712.33	712.41
℄ Brg. N. Abut.	725+50.75	20.32	712.24	712.26
Bk. N. Abut.	725+52.60	20.35	712.22	712.24

GIRDER 19

Location	Station	Offset	Theoretical Grade Elevations	Theoretical Grade Elevations Adjusted For Dead Load Deflection And Grinding
Bk. S. Abut.	722+84.66	20.41	713.03	713.06
℄ Brg. S. Abut.	722+86.51	20.46	713.04	713.06
2A	722+96.55	20.75	713.05	713.08
2B	723+06.59	21.04	713.06	713.10
2C	723+16.63	21.32	713.06	713.11
2D	723+26.67	21.61	713.06	713.11
2E	723+36.71	21.90	713.05	713.10
2F	723+46.75	22.19	713.05	713.08
2G	723+56.79	22.48	713.04	713.05
2H	723+66.83	22.76	713.02	713.03
2I	723+76.87	23.05	713.00	713.00
2J	723+86.90	23.34	712.98	712.98
℄ Brg. Pier	723+99.20	23.69	712.95	712.97
2K	724+09.24	23.98	712.91	712.96
2L	724+19.28	24.27	712.88	712.95
2M	724+29.32	24.56	712.84	712.95
2N	724+39.36	24.84	712.80	712.94
2O	724+49.40	25.13	712.75	712.92
2P	724+59.44	25.42	712.70	712.89
2Q	724+69.48	25.71	712.65	712.85
2R	724+79.51	25.99	712.59	712.80
2S	724+89.55	26.28	712.53	712.74
2T	724+99.59	26.57	712.47	712.67
2U	725+09.63	26.86	712.40	712.58
2V	725+19.67	27.15	712.33	712.48
2W	725+29.71	27.43	712.25	712.37
2X	725+39.75	27.72	712.18	712.25
℄ Brg. N. Abut.	725+51.80	28.07	712.08	712.10
Bk. N. Abut.	725+53.65	28.12	712.06	712.08

F.A.I.	SECTION	COUNTY	TOTAL SHEETS	SHEET NO.
72	(58-63HVB)BR	MACON	122	58

WEST EDGE OF SHOULDER

Location	Station	Offset	Theoretical Grade Elevations	Theoretical Grade Elevations Adjusted for Grinding
S. End S. Appr. Slab	722+32.07	-41.64	712.46	712.48
1A	722+42.05	-41.84	712.49	712.51
1B	722+52.02	-42.04	712.52	712.54
N. End S. Appr. Slab	722+61.99	-42.24	712.55	712.57

WEST EDGE OF PAVEMENT

Location	Station	Offset	Theoretical Grade Elevations	Theoretical Grade Elevations Adjusted for Grinding
S. End S. Appr. Slab	722+32.89	-35.66	712.58	712.60
1A	722+42.86	-35.86	712.61	712.64
1B	722+52.83	-36.05	712.64	712.66
N. End S. Appr. Slab	722+62.80	-36.25	712.67	712.69

WEST EDGE OF CENTER LANE

Location	Station	Offset	Theoretical Grade Elevations	Theoretical Grade Elevations Adjusted for Grinding
S. End S. Appr. Slab	722+36.09	-12.00	713.07	713.09
1A	722+46.09	-12.00	713.10	713.12
1B	722+56.09	-12.00	713.13	713.15
N. End S. Appr. Slab	722+66.09	-12.00	713.16	713.18

STAGE CONSTRUCTION LINE

Location	Station	Offset	Theoretical Grade Elevations	Theoretical Grade Elevations Adjusted for Grinding
S. End S. Appr. Slab	722+36.21	-11.08	713.08	713.10
1A	722+46.21	-11.08	713.12	713.14
1B	722+56.21	-11.08	713.15	713.17
N. End S. Appr. Slab	722+66.21	-11.08	713.18	713.20

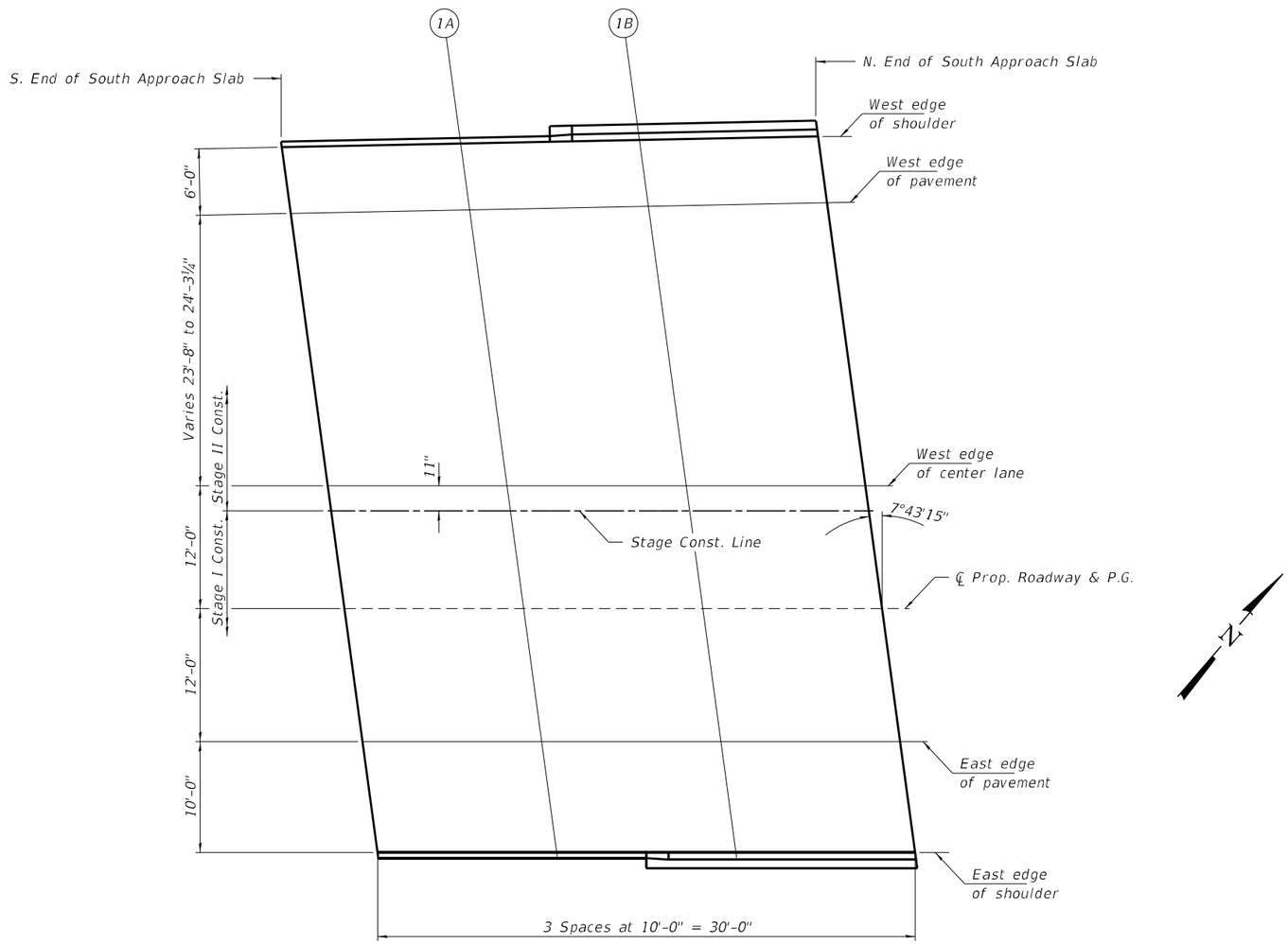

W.B. SOUTH APPROACH SLAB - PLAN

℄ PROPOSED ROADWAY & P.G.L.

Location	Station	Offset	Theoretical Grade Elevations	Theoretical Grade Elevations Adjusted for Grinding
S. End S. Appr. Slab	722+37.72	0.00	713.25	713.27
1A	722+47.72	0.00	713.29	713.31
1B	722+57.72	0.00	713.32	713.34
N. End S. Appr. Slab	722+67.72	0.00	713.35	713.37

EAST EDGE OF PAVEMENT

Location	Station	Offset	Theoretical Grade Elevations	Theoretical Grade Elevations Adjusted for Grinding
S. End S. Appr. Slab	722+39.34	12.00	713.08	713.10
1A	722+49.34	12.00	713.11	713.13
1B	722+59.34	12.00	713.14	713.16
N. End S. Appr. Slab	722+69.34	12.00	713.17	713.19

EAST EDGE OF SHOULDER

Location	Station	Offset	Theoretical Grade Elevations	Theoretical Grade Elevations Adjusted for Grinding
S. End S. Appr. Slab	722+40.70	22.00	712.88	712.90
1A	722+50.70	22.00	712.92	712.94
1B	722+60.70	22.00	712.95	712.97
N. End S. Appr. Slab	722+70.70	22.00	712.97	712.99

WEST EDGE OF SHOULDER

Location	Station	Offset	Theoretical Grade Elevations	Theoretical Grade Elevations Adjusted for Grinding
S. End N. Appr. Slab	725+27.20	-47.55	711.87	711.89
1C	725+37.18	-47.75	711.79	711.82
1D	725+47.15	-47.95	711.71	711.74
N. End N. Appr. Slab	725+57.12	-48.15	711.63	711.65

WEST EDGE OF PAVEMENT

Location	Station	Offset	Theoretical Grade Elevations	Theoretical Grade Elevations Adjusted for Grinding
S. End N. Appr. Slab	725+28.02	-41.56	711.98	712.01
1C	725+37.99	-41.76	711.91	711.93
1D	725+47.96	-41.96	711.83	711.85
N. End N. Appr. Slab	725+57.94	-42.16	711.74	711.77

WEST EDGE OF CENTER LANE

Location	Station	Offset	Theoretical Grade Elevations	Theoretical Grade Elevations Adjusted for Grinding
S. End N. Appr. Slab	725+32.02	-12.00	712.55	712.57
1C	725+42.02	-12.00	712.47	712.49
1D	725+52.02	-12.00	712.40	712.42
N. End N. Appr. Slab	725+62.02	-12.00	712.31	712.33

STAGE CONSTRUCTION LINE

Location	Station	Offset	Theoretical Grade Elevations	Theoretical Grade Elevations Adjusted for Grinding
S. End N. Appr. Slab	725+32.15	-11.08	712.56	712.58
1C	725+42.15	-11.08	712.49	712.51
1D	725+52.15	-11.08	712.41	712.43
N. End N. Appr. Slab	725+62.15	-11.08	712.33	712.35

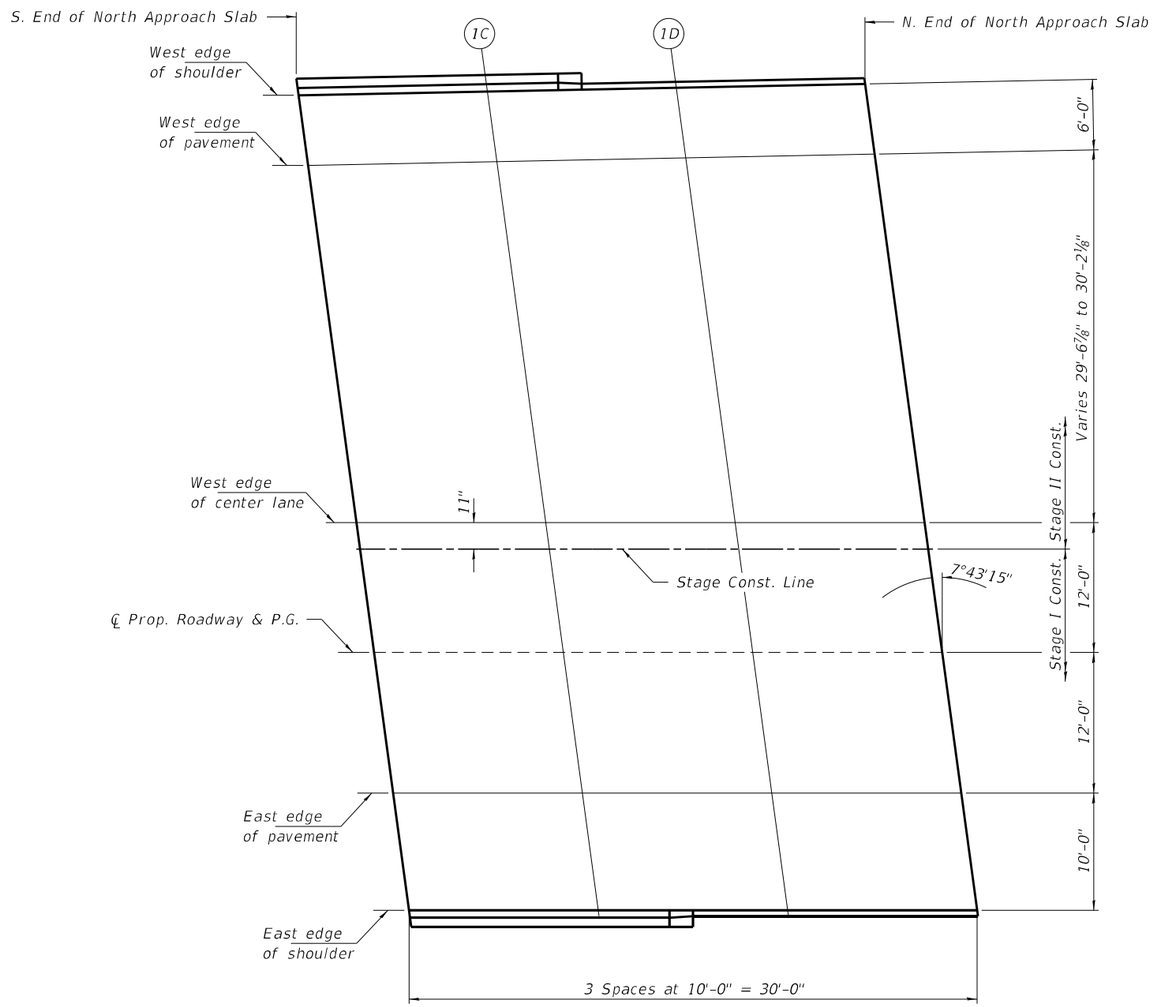

W.B. NORTH APPROACH SLAB - PLAN

℄ PROPOSED ROADWAY & P.G.L.

Location	Station	Offset	Theoretical Grade Elevations	Theoretical Grade Elevations Adjusted for Grinding
S. End N. Appr. Slab	725+33.65	0.00	712.72	712.74
1C	725+43.65	0.00	712.64	712.66
1D	725+53.65	0.00	712.56	712.58
N. End N. Appr. Slab	725+63.65	0.00	712.48	712.50

EAST EDGE OF PAVEMENT

Location	Station	Offset	Theoretical Grade Elevations	Theoretical Grade Elevations Adjusted for Grinding
S. End N. Appr. Slab	725+35.28	12.00	712.52	712.54
1C	725+45.28	12.00	712.45	712.47
1D	725+55.28	12.00	712.37	712.39
N. End N. Appr. Slab	725+65.28	12.00	712.29	712.31

EAST EDGE OF SHOULDER

Location	Station	Offset	Theoretical Grade Elevations	Theoretical Grade Elevations Adjusted for Grinding
S. End N. Appr. Slab	725+36.63	22.00	712.31	712.33
1C	725+46.63	22.00	712.24	712.26
1D	725+56.63	22.00	712.16	712.18
N. End N. Appr. Slab	725+66.63	22.00	712.08	712.10

WEST EDGE OF SHOULDER

Location	Station	Offset	Theoretical Grade Elevations	Theoretical Grade Elevations Adjusted for Grinding
S. End S. Appr. Slab	722+48.29	-34.00	712.67	712.69
2A	722+58.29	-34.00	712.70	712.72
2B	722+68.29	-34.00	712.73	712.75
N. End S. Appr. Slab	722+78.29	-34.00	712.75	712.77

WEST EDGE OF PAVEMENT

Location	Station	Offset	Theoretical Grade Elevations	Theoretical Grade Elevations Adjusted for Grinding
S. End S. Appr. Slab	722+49.65	-24.00	712.87	712.89
2A	722+59.65	-24.00	712.90	712.92
2B	722+69.65	-24.00	712.93	712.95
N. End S. Appr. Slab	722+79.65	-24.00	712.95	712.97

WEST EDGE OF CENTER LANE

Location	Station	Offset	Theoretical Grade Elevations	Theoretical Grade Elevations Adjusted for Grinding
S. End S. Appr. Slab	722+51.27	-12.00	713.12	713.14
2A	722+61.27	-12.00	713.15	713.17
2B	722+71.27	-12.00	713.17	713.20
N. End S. Appr. Slab	722+81.27	-12.00	713.20	713.22

STAGE CONSTRUCTION LINE

Location	Station	Offset	Theoretical Grade Elevations	Theoretical Grade Elevations Adjusted for Grinding
S. End S. Appr. Slab	722+51.76	-8.42	713.17	713.20
2A	722+61.76	-8.42	713.20	713.22
2B	722+71.76	-8.42	713.23	713.25
N. End S. Appr. Slab	722+81.76	-8.42	713.25	713.27

℄ PROPOSED ROADWAY & P.G.L.

Location	Station	Offset	Theoretical Grade Elevations	Theoretical Grade Elevations Adjusted for Grinding
S. End S. Appr. Slab	722+52.90	0.00	713.30	713.32
2A	722+62.90	0.00	713.33	713.35
2B	722+72.90	0.00	713.36	713.38
N. End S. Appr. Slab	722+82.90	0.00	713.38	713.40

EAST EDGE OF PAVEMENT

Location	Station	Offset	Theoretical Grade Elevations	Theoretical Grade Elevations Adjusted for Grinding
S. End S. Appr. Slab	722+54.53	12.00	713.13	713.15
2A	722+64.53	12.00	713.16	713.18
2B	722+74.53	12.00	713.18	713.20
N. End S. Appr. Slab	722+84.53	12.00	713.20	713.22

EAST EDGE OF SHOULDER

Location	Station	Offset	Theoretical Grade Elevations	Theoretical Grade Elevations Adjusted for Grinding
S. End S. Appr. Slab	722+55.88	22.00	712.91	712.94
2A	722+65.88	22.00	712.94	712.97
2B	722+75.88	22.00	712.97	712.99
N. End S. Appr. Slab	722+85.88	22.00	712.99	713.01

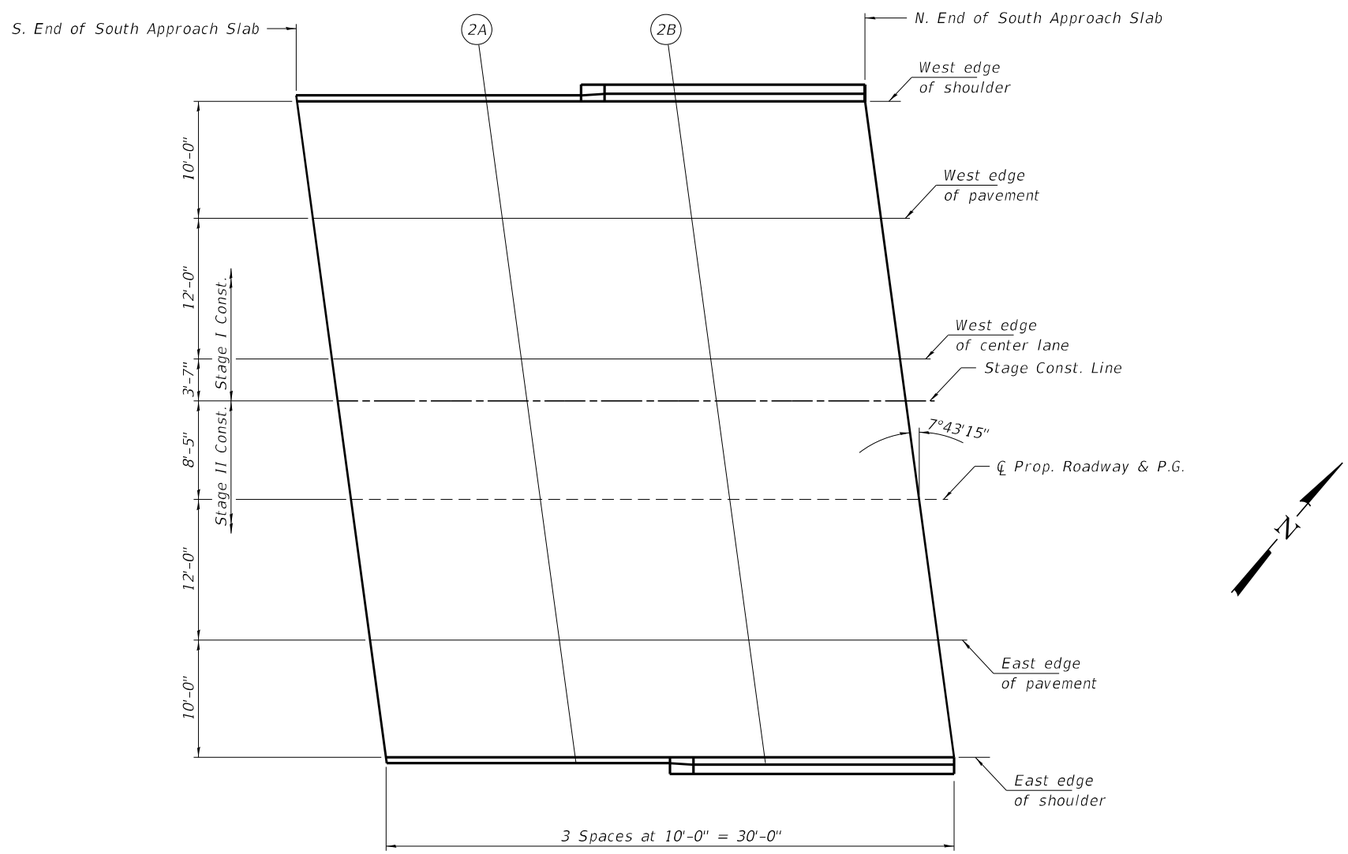

E.B. SOUTH APPROACH SLAB - PLAN

FILE NAME = 190501-sht-bridge.dgn	USER NAME = rhosick	DESIGNED - S.M.S.	REVISED -
HAMPTON, LENZINI AND RENWICK, INC. 3085 STEVENSON DRIVE, SUITE 201 SPRINGFIELD, ILLINOIS 62703 ILLINOIS PROFESSIONAL DESIGN FIRM LS / PC / SE CORP. 184.000959		CHECKED - S.W.M.	REVISED -
	PLOT SCALE =	DRAWN - R.D.H.	REVISED -
	PLOT DATE = 8/21/2025	CHECKED - S.M.S.	REVISED -

STATE OF ILLINOIS
DEPARTMENT OF TRANSPORTATION

TOP OF SOUTH APPROACH SLAB ELEVATIONS (E.B.)
SN 058-0139(E.B.) & 058-0140(W.B.)

SHEET NO. 21 OF 70 SHEETS

F.A.I.	SECTION	COUNTY	TOTAL SHEETS	SHEET NO.
72	(58-63HVB)BR	MACON	122	61
		CONTRACT NO. 74705		
		ILLINOIS	FED. AID PROJECT	

WEST EDGE OF SHOULDER

Location	Station	Offset	Theoretical Grade Elevations	Theoretical Grade Elevations Adjusted for Grinding
S. End N. Appr. Slab	725+44.22	-34.00	712.02	712.04
2C	725+54.22	-34.00	711.94	711.96
2D	725+64.22	-34.00	711.86	711.88
N. End N. Appr. Slab	725+74.22	-34.00	711.77	711.79

WEST EDGE OF PAVEMENT

Location	Station	Offset	Theoretical Grade Elevations	Theoretical Grade Elevations Adjusted for Grinding
S. End N. Appr. Slab	725+45.58	-24.00	712.21	712.23
2C	725+55.58	-24.00	712.13	712.15
2D	725+65.58	-24.00	712.04	712.07
N. End N. Appr. Slab	725+75.58	-24.00	711.96	711.98

WEST EDGE OF CENTER LANE

Location	Station	Offset	Theoretical Grade Elevations	Theoretical Grade Elevations Adjusted for Grinding
S. End N. Appr. Slab	725+47.21	-12.00	712.43	712.45
2C	725+57.21	-12.00	712.35	712.37
2D	725+67.21	-12.00	712.27	712.29
N. End N. Appr. Slab	725+77.21	-12.00	712.18	712.20

STAGE CONSTRUCTION LINE

Location	Station	Offset	Theoretical Grade Elevations	Theoretical Grade Elevations Adjusted for Grinding
S. End N. Appr. Slab	725+47.69	-8.42	712.48	712.50
2C	725+57.69	-8.42	712.40	712.42
2D	725+67.69	-8.42	712.32	712.34
N. End N. Appr. Slab	725+77.69	-8.42	712.23	712.25

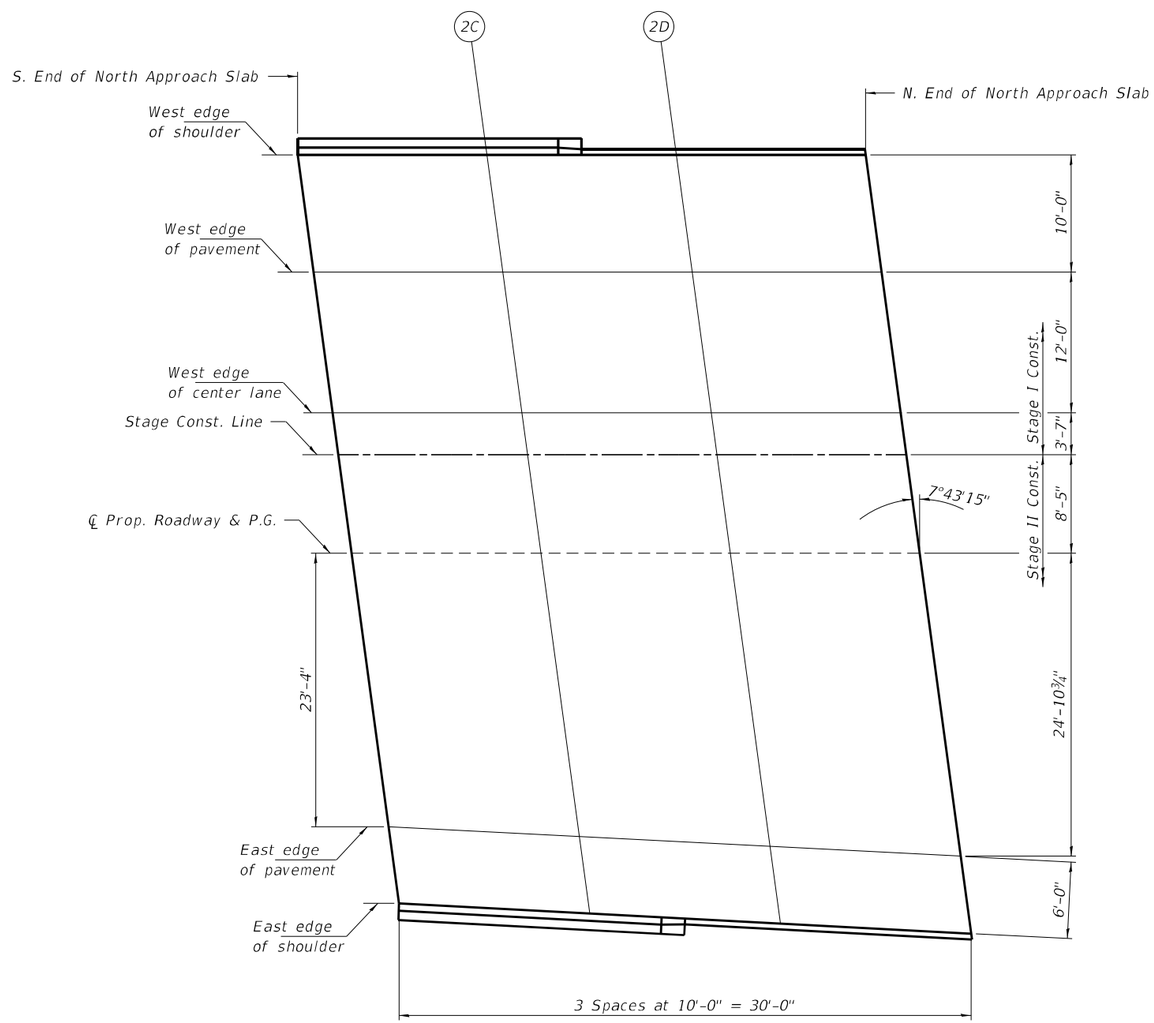

E.B. NORTH APPROACH SLAB - PLAN

℄ PROPOSED ROADWAY & P.G.L.

Location	Station	Offset	Theoretical Grade Elevations	Theoretical Grade Elevations Adjusted for Grinding
S. End N. Appr. Slab	725+48.83	0.00	712.60	712.62
2C	725+58.83	0.00	712.52	712.54
2D	725+68.83	0.00	712.44	712.46
N. End N. Appr. Slab	725+78.83	0.00	712.35	712.37

EAST EDGE OF PAVEMENT

Location	Station	Offset	Theoretical Grade Elevations	Theoretical Grade Elevations Adjusted for Grinding
S. End N. Appr. Slab	725+52.04	23.64	712.16	712.18
2C	725+62.11	24.17	712.07	712.09
2D	725+72.18	24.70	711.97	711.99
N. End N. Appr. Slab	725+82.25	25.23	711.87	711.89

EAST EDGE OF SHOULDER

Location	Station	Offset	Theoretical Grade Elevations	Theoretical Grade Elevations Adjusted for Grinding
S. End N. Appr. Slab	725+52.85	29.68	712.04	712.06
2C	725+62.93	30.21	711.94	711.96
2D	725+73.00	30.74	711.85	711.87
N. End N. Appr. Slab	725+83.07	31.28	711.75	711.77

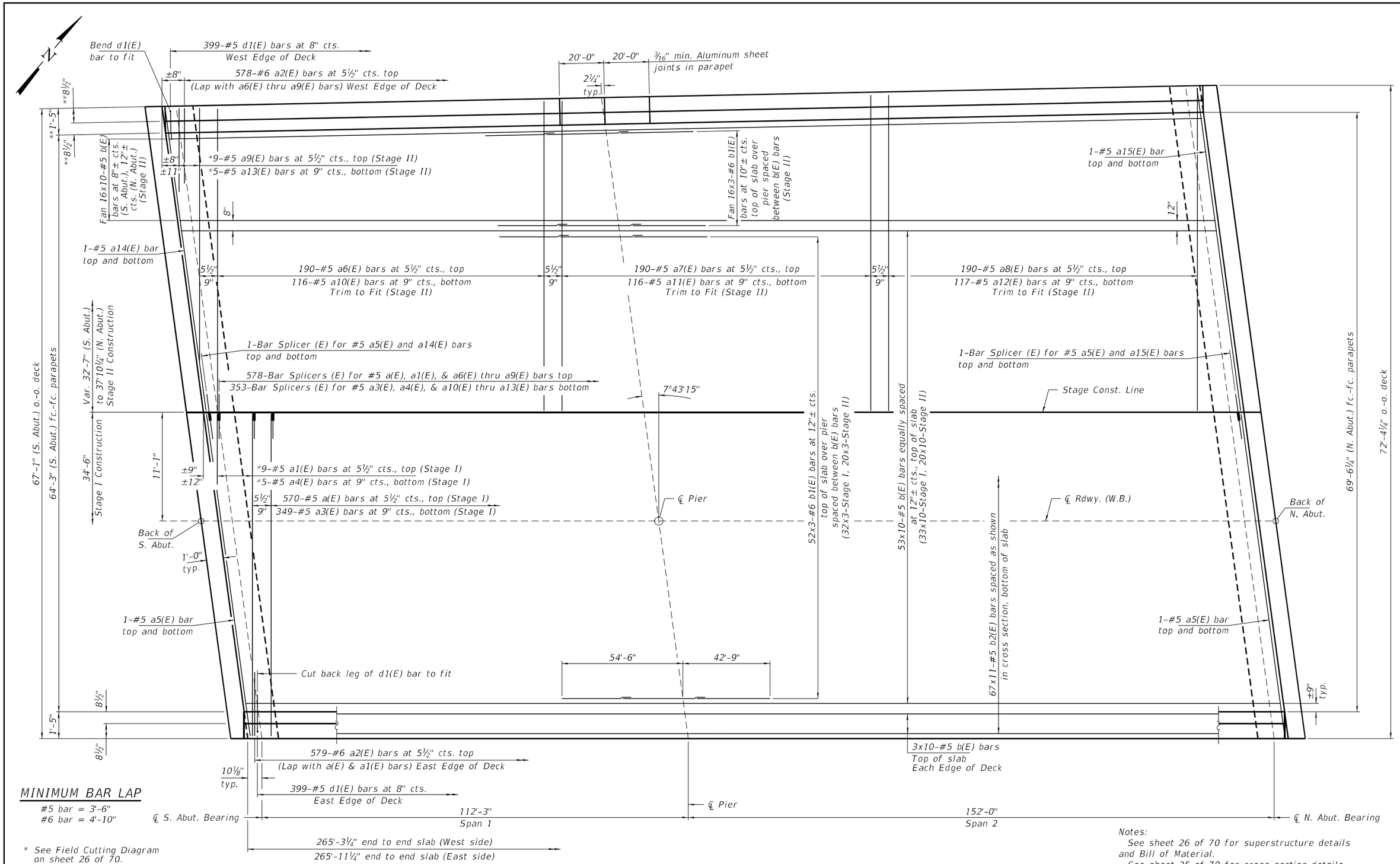

MINIMUM BAR LAP

#5 bar = 3'-6"
#6 bar = 4'-10"

* See Field Cutting Diagram on sheet 26 of 70.

** Measured perpendicular to the edge of deck.

PLAN - WEST BOUND LANES

Notes:
See sheet 26 of 70 for superstructure details and Bill of Material.
See sheet 25 of 70 for cross section details.
Bars indicated thus 52 x 3-#5 etc. indicates 52 lines of bars with 3 lengths per line.

FILE NAME = 190501-sht-bridge.dgn	USER NAME = rhosick	DESIGNED - S.M.S.	REVISED -	STATE OF ILLINOIS DEPARTMENT OF TRANSPORTATION	SUPERSTRUCTURE (W.B.) SN 058-0139(E.B.) & 058-0140(W.B.)	F.A.I.	SECTION	COUNTY	TOTAL SHEETS / SHEET NO.
HAMPTON, LENZINI AND RENWICK, INC. 3085 STEVENSON DRIVE, SUITE 201 SPRINGFIELD, ILLINOIS 62703		CHECKED - S.W.M.	REVISED -			72	(58-63HVB)BR	MACON	122 / 63
ILLINOIS PROFESSIONAL DESIGN FIRM LS / PE / SE CORP. 184.000959	PLOT SCALE =	DRAWN - R.D.H.	REVISED -					CONTRACT NO. 74705	
	PLOT DATE = 8/21/2025	CHECKED - S.M.S.	REVISED -		SHEET NO. 23 OF 70 SHEETS			ILLINOIS FED. AID PROJECT	

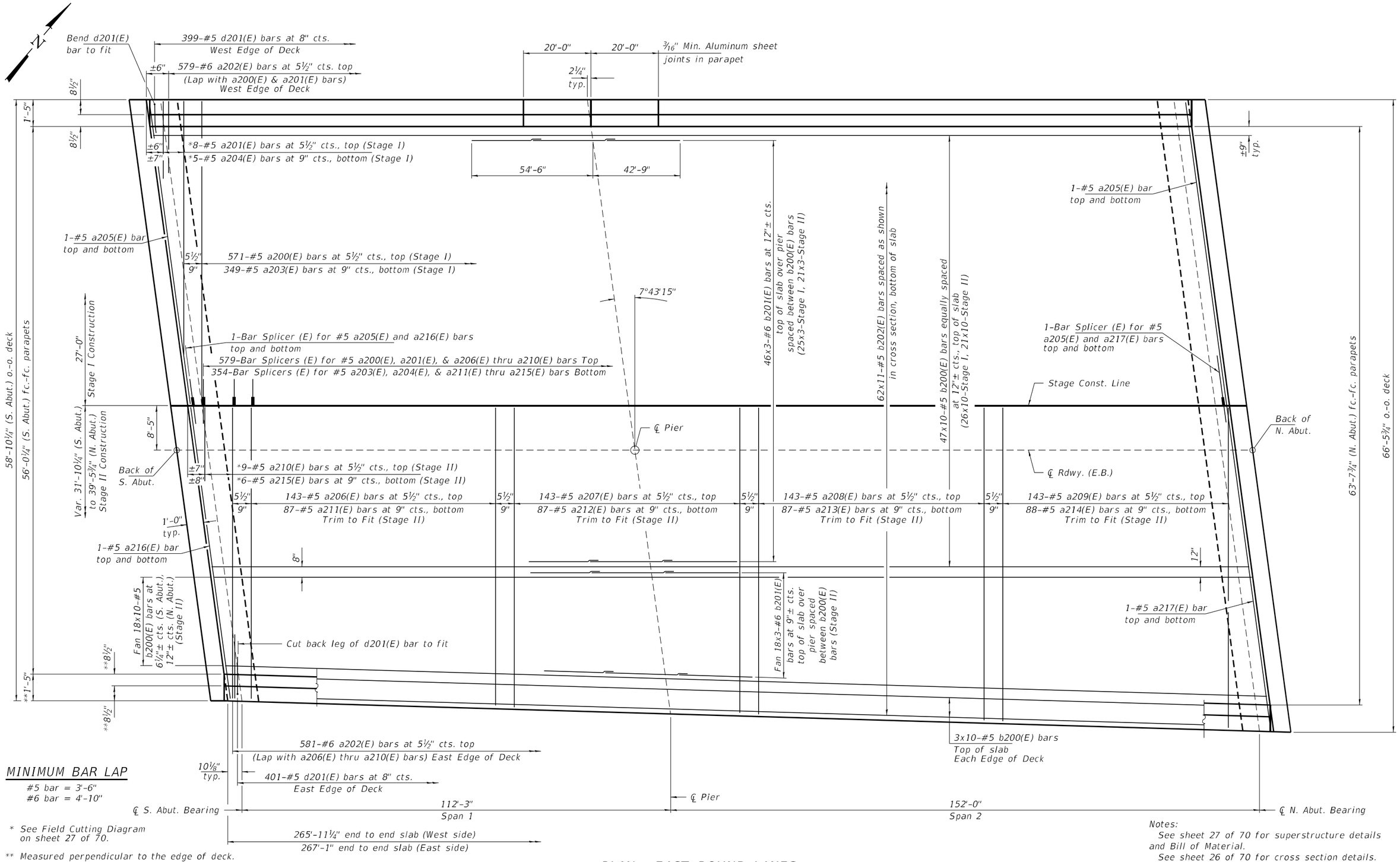

MINIMUM BAR LAP

#5 bar = 3'-6"
#6 bar = 4'-10"

* See Field Cutting Diagram on sheet 27 of 70.

** Measured perpendicular to the edge of deck.

PLAN - EAST BOUND LANES

Notes:
See sheet 27 of 70 for superstructure details and Bill of Material.
See sheet 26 of 70 for cross section details.
Bars indicated thus 46 x 3-#6 etc. indicates 46 lines of bars with 3 lengths per line.

FILE NAME = 190501-sht-bridge.dgn	USER NAME = rhosick	DESIGNED - S.M.S.	REVISED -
HAMPTON, LENZINI AND RENWICK, INC. 3085 STEVENSON DRIVE, SUITE 201 SPRINGFIELD, ILLINOIS 62703		CHECKED - S.W.M.	REVISED -
ILLINOIS PROFESSIONAL DESIGN FIRM LS / PE / SE CORP. 184.000959	PLOT SCALE =	DRAWN - R.D.H.	REVISED -
	PLOT DATE = 8/21/2025	CHECKED - S.M.S.	REVISED -

STATE OF ILLINOIS
DEPARTMENT OF TRANSPORTATION

SUPERSTRUCTURE (E.B.)
SN 058-0139(E.B.) & 058-0140(W.B.)

SHEET NO. 24 OF 70 SHEETS

F.A.I.	SECTION	COUNTY	TOTAL SHEETS	SHEET NO.
72	(58-63HVB)BR	MACON	122	64
		CONTRACT NO. 74705		
		ILLINOIS	FED. AID PROJECT	

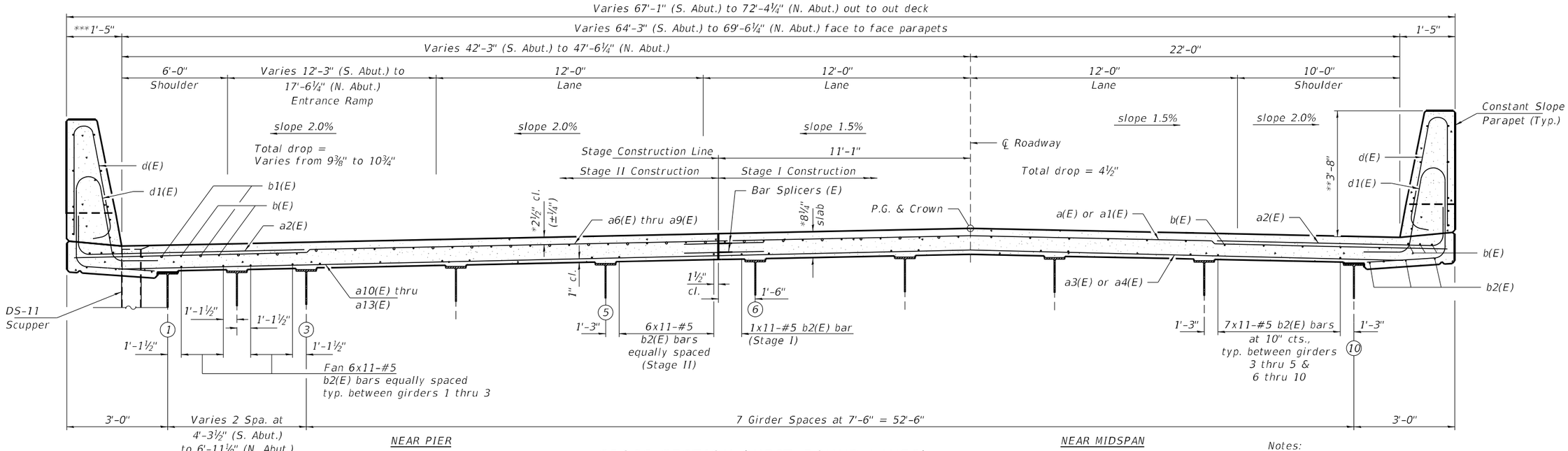

CROSS SECTION (WEST BOUND LANES)

(Looking North, dimensions measured perpendicular to ℄ I-72)

* Prior to Grinding
** After Grinding
*** Measured perpendicular to the edge of deck.
**** Exit Ramp varies 0'-0" (S. Abut.) to 11'-7¾" (N. Abut.)
***** Shoulder varies 10'-0¼" (S. Abut.) to 6'-0" (N. Abut.)

Notes:
See sheet 26 of 70 for superstructure details and bill of material (W.B.)
See sheet 23 of 70 for Superstructure Plans (W.B.)
See sheet 27 of 70 for superstructure details and bill of material (E.B.)
See sheet 24 of 70 for Superstructure Plans (E.B.)
See sheet 1 and 28 of 70 for Drainage Scupper details and locations.

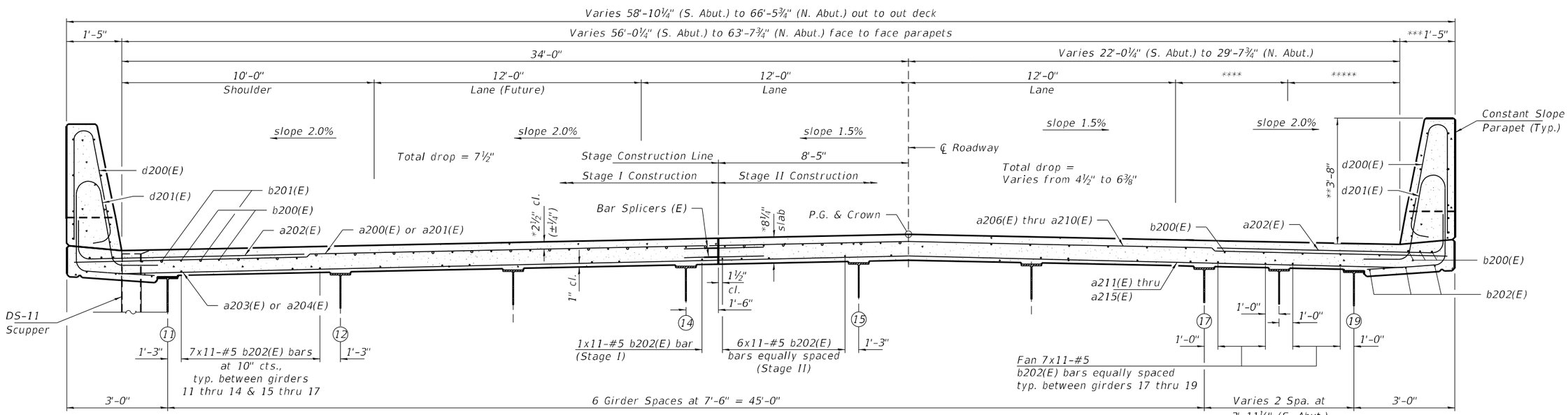

CROSS SECTION (EAST BOUND LANES)

(Looking North, dimensions measured perpendicular to ℄ I-72)

FILE NAME = 190501-sht-bridge.dgn	USER NAME = rhosick	DESIGNED - S.M.S.	REVISED -	STATE OF ILLINOIS DEPARTMENT OF TRANSPORTATION	SUPERSTRUCTURE CROSS SECTIONS SN 058-0139(E.B.) & 058-0140(W.B.)	F.A.I.	SECTION	COUNTY	TOTAL SHEETS	SHEET NO.
HAMPTON, LENZINI AND RENWICK, INC. 3085 STEVENSON DRIVE, SUITE 201 SPRINGFIELD, ILLINOIS 62703		CHECKED - S.W.M.	REVISED -			72	(58-63HVB)BR	MACON	122	65
ILLINOIS PROFESSIONAL DESIGN FIRM LS / PE / SE CORP. 184.000959	PLOT SCALE =	DRAWN - R.D.H.	REVISED -		SHEET NO. 25 OF 70 SHEETS			CONTRACT NO. 74705		
	PLOT DATE = 8/21/2025	CHECKED - S.M.S.	REVISED -				ILLINOIS	FED. AID PROJECT		

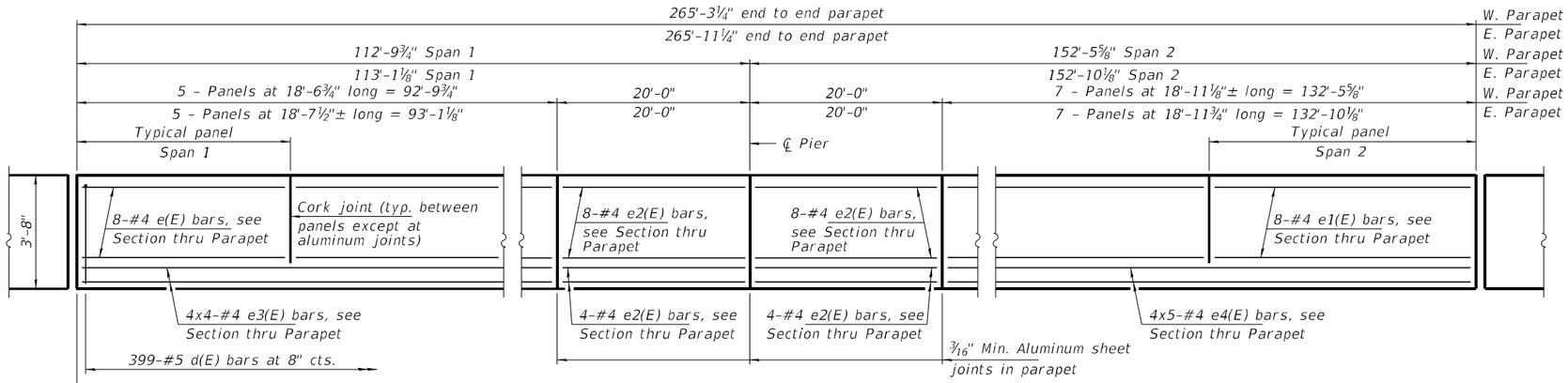

INSIDE ELEVATION OF PARAPET (W.B.)

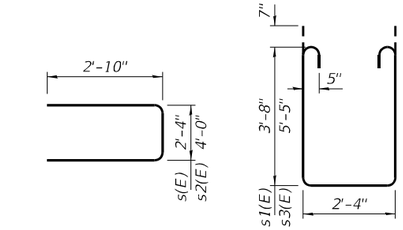

BAR s(E) & s2(E) BAR s1(E) & s3(E)

MINIMUM BAR LAP

#4 bar = 2'-5"

* Prior to Grinding
** After Grinding

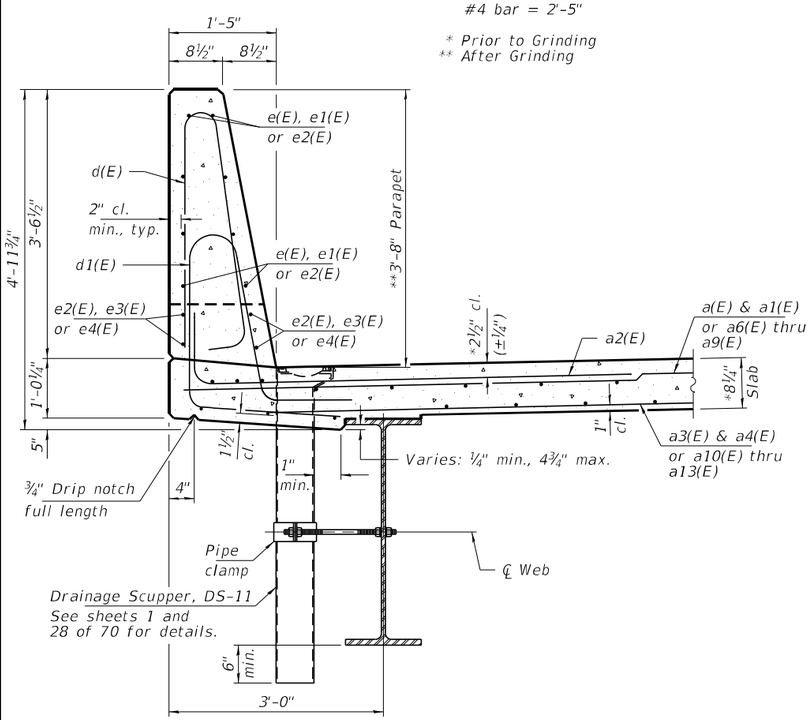

SECTION THRU PARAPET

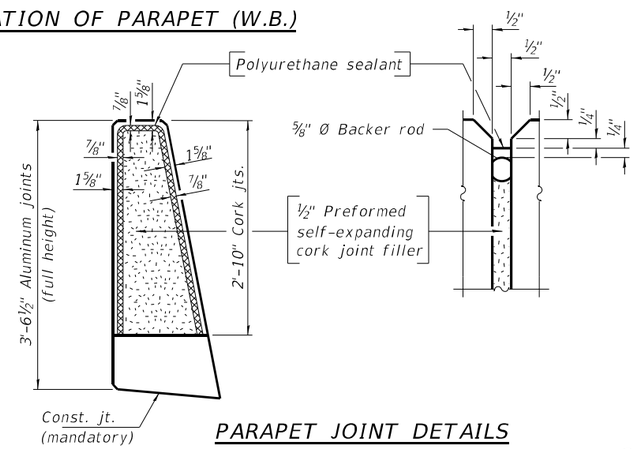

PARAPET JOINT DETAILS

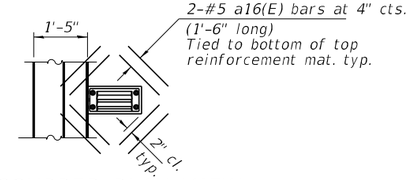

SCUPPER PLAN VIEW

Note:
Cut longitudinal reinforcement to clear drainage scuppers.

Notes:
The clamping device shall be galvanized according to AASHTO M 232. Cost of clamping device included with Drainage Scupper, DS-11.
The 3/16" aluminum sheet shall be ASTM B 209 alloy 3003-H14 and coated with 5 mils of either bitumen paint or epoxy paint to minimize reaction with wet concrete. Cost included with Concrete Superstructure.
The Polyurethane sealant shall be according to Article 1050.04 of the Std. Spec. and the color shall be gray.

SUPERSTRUCTURE BILL OF MATERIAL (W.B.)

BAR	NO.	SIZE	LENGTH	SHAPE
a(E)	570	#5	34'-3"	
a1(E)	9	#5	36'-6"	
a2(E)	1,157	#6	8'-4"	
a3(E)	349	#5	33'-9"	
a4(E)	5	#5	35'-7"	
a5(E)	4	#5	34'-8"	
a6(E)	190	#5	34'-2"	
a7(E)	190	#5	35'-11"	
a8(E)	190	#5	37'-7"	
a9(E)	9	#5	34'-7"	
a10(E)	116	#5	33'-8"	
a11(E)	116	#5	35'-4"	
a12(E)	117	#5	37'-1"	
a13(E)	5	#5	33'-10"	
a14(E)	2	#5	32'-8"	
a15(E)	2	#5	38'-0"	
a16(E)	32	#5	1'-6"	
b(E)	750	#5	29'-10"	
b1(E)	204	#6	35'-8"	
b2(E)	737	#5	27'-6"	
d(E)	798	#5	7'-0"	
d1(E)	798	#5	8'-5"	
e(E)	80	#4	18'-2"	
e1(E)	112	#4	18'-7"	
e2(E)	48	#4	19'-8"	
e3(E)	32	#4	25'-0"	
e4(E)	40	#4	28'-6"	
m(E)	11	#6	34'-7"	
m1(E)	5	#6	32'-7"	
m2(E)	8	#6	4'-0"	
m3(E)	54	#6	7'-2"	
m4(E)	18	#6	2'-8"	
m5(E)	9	#6	5'-8"	
m6(E)	9	#6	1'-2"	
m7(E)	6	#6	38'-0"	
m8(E)	10	#6	6'-8"	
s(E)	54	#5	8'-0"	
s1(E)	54	#5	10'-10"	
s2(E)	60	#5	9'-8"	
s3(E)	60	#5	14'-4"	
Concrete Superstructure			Cu. Yd.	658.6
Protective Coat			Sq. Yd.	2,234
Reinf. Bars, Epoxy Coated			Pound	159,850
Bridge Deck Grooving (Longitudinal)			Sq. Yd.	1,503
Diamond Grinding (Bridge Section)			Sq. Yd.	1,857

Bars indicated thus 4x4-#4 etc. indicates 4 lines of bars with 4 lengths per line.

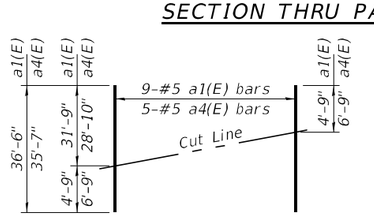

FIELD CUTTING DIAGRAM

Order a1(E) and a4(E) full length. Cut as shown and use remainder of bars in opposite end of deck.

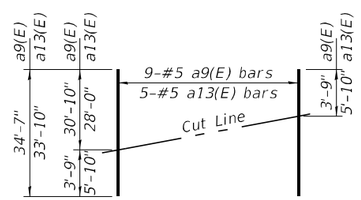

FIELD CUTTING DIAGRAM

Order a9(E) and a13(E) full length. Cut as shown and use remainder of bars in opposite end of deck.

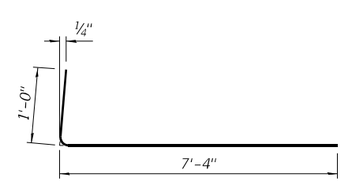

BAR a2(E)

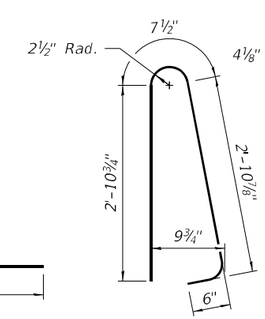

BAR d(E)

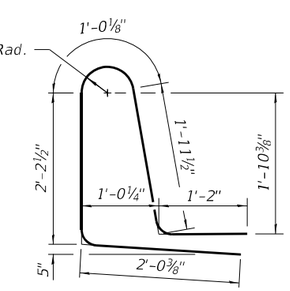

BAR d1(E)

FILE NAME = 190501-sht-bridge.dgn	USER NAME = rhosick	DESIGNED - S.M.S.	REVISED -
HAMPTON, LENZINI AND RENWICK, INC. 3305 STEVENSON DRIVE, SUITE 201 SPRINGFIELD, ILLINOIS 62703		CHECKED - S.W.M.	REVISED -
ILLINOIS PROFESSIONAL DESIGN FIRM LS / PE / SE CORP. 184.000959	PLOT SCALE =	DRAWN - R.D.H.	REVISED -
	PLOT DATE = 8/21/2025	CHECKED - S.M.S.	REVISED -

STATE OF ILLINOIS
DEPARTMENT OF TRANSPORTATION

SUPERSTRUCTURE DETAILS (W.B.)
SN 058-0139(E.B.) & 058-0140(W.B.)

SHEET NO. 26 OF 70 SHEETS

F.A.I.	SECTION	COUNTY	TOTAL SHEETS	SHEET NO.
72	(58-63HVB)BR	MACON	122	66

CONTRACT NO. 74705

ILLINOIS FED. AID PROJECT

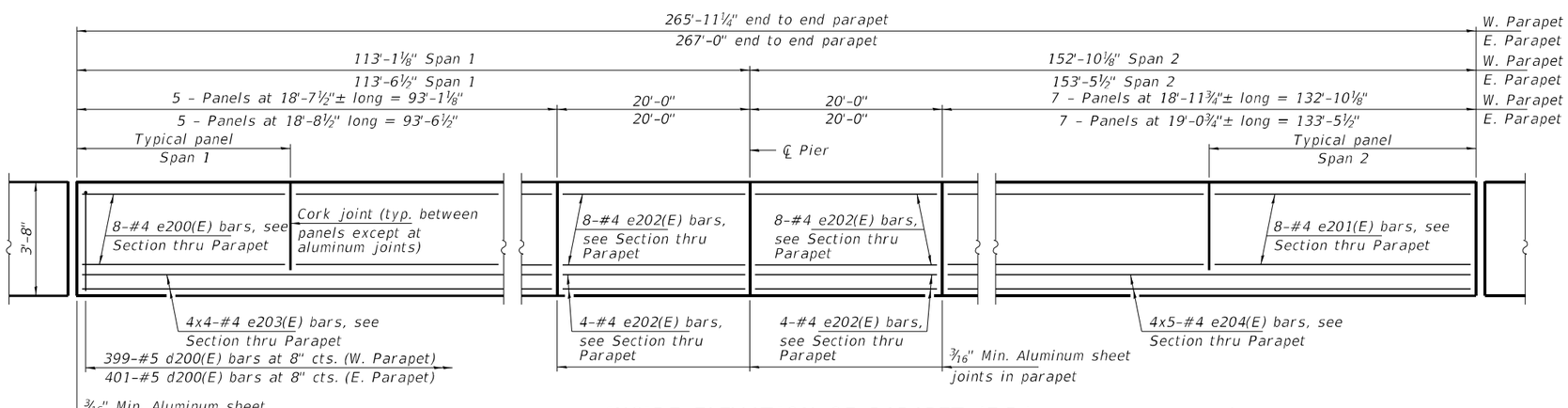

INSIDE ELEVATION OF PARAPET (E.B.)

MINIMUM BAR LAP

#4 bar = 2'-5"

* Prior to Grinding
** After Grinding

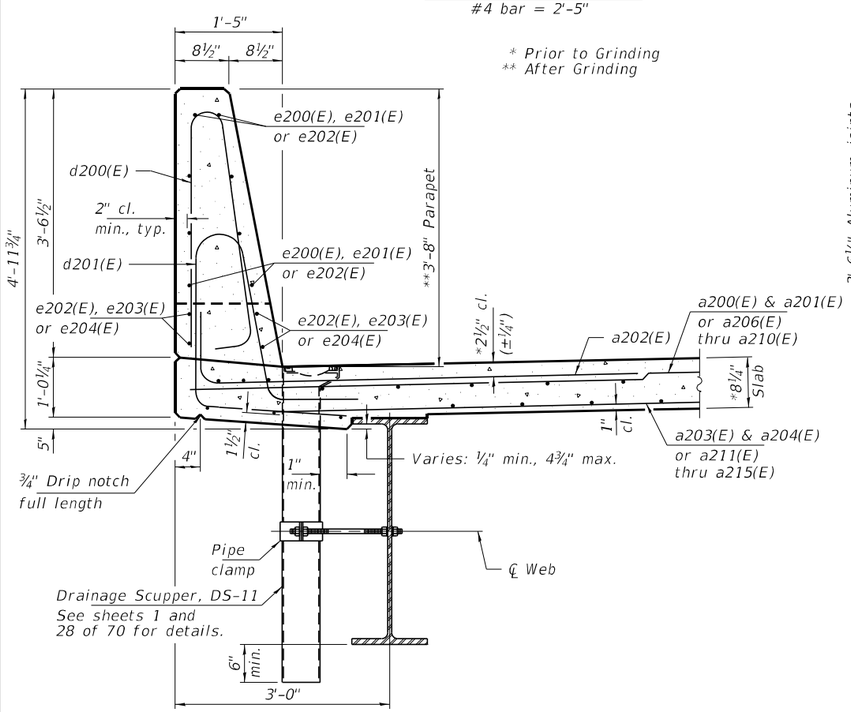

SECTION THRU PARAPET

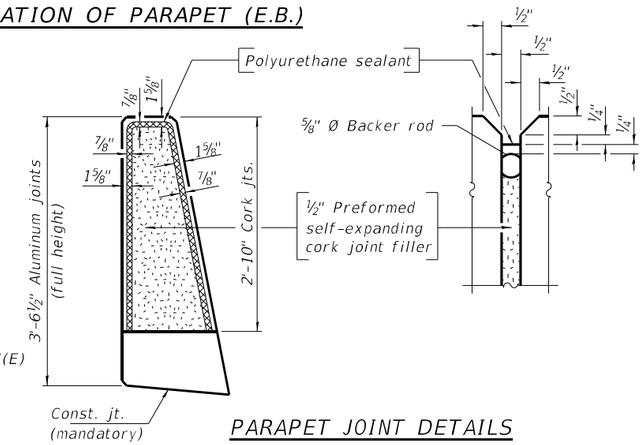

PARAPET JOINT DETAILS

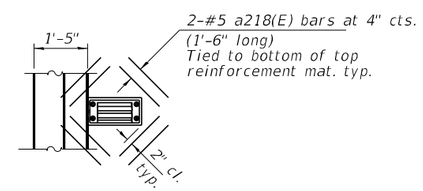

SCUPPER PLAN VIEW

Note:
Cut longitudinal reinforcement to clear drainage scuppers.

Notes:
The clamping device shall be galvanized according to AASHTO M 232. Cost of clamping device included with Drainage Scupper, DS-11.
The 3/16" aluminum sheet shall be ASTM B 209 alloy 3003-H14 and coated with 5 mils of either bitumen paint or epoxy paint to minimize reaction with wet concrete. Cost included with Concrete Superstructure.
The Polyurethane sealant shall be according to Article 1050.04 of the Std. Spec. and the color shall be gray.

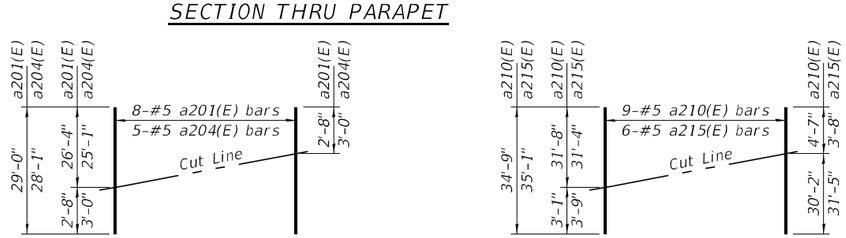

FIELD CUTTING DIAGRAM

Order a201(E) and a204(E) full length. Cut as shown and use remainder of bars in opposite end of deck.

FIELD CUTTING DIAGRAM

Order a210(E) and a215(E) full length. Cut as shown and use remainder of bars in opposite end of deck.

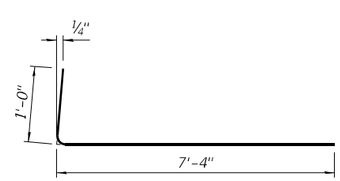

BAR a202(E)

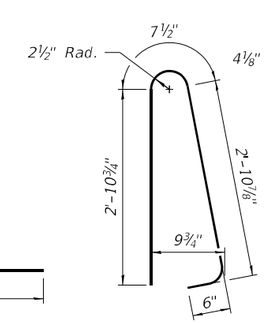

BAR d200(E)

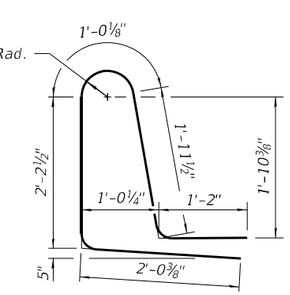

BAR d201(E)

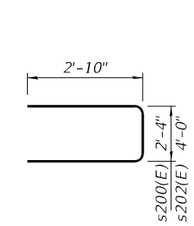

BAR s200(E) & s202(E)

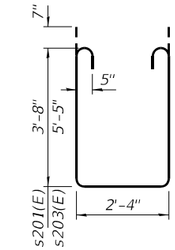

BAR s201(E) & s203(E)

SUPERSTRUCTURE BILL OF MATERIAL (E.B.)

BAR	NO.	SIZE	LENGTH	SHAPE
a200(E)	571	#5	26'-9"	
a201(E)	8	#5	29'-0"	
a202(E)	1,160	#6	8'-4"	
a203(E)	349	#5	26'-3"	
a204(E)	5	#5	28'-1"	
a205(E)	4	#5	27'-0"	
a206(E)	143	#5	33'-6"	
a207(E)	143	#5	35'-6"	
a208(E)	143	#5	37'-3"	
a209(E)	143	#5	39'-2"	
a210(E)	9	#5	34'-9"	
a211(E)	87	#5	33'-0"	
a212(E)	87	#5	34'-10"	
a213(E)	87	#5	36'-9"	
a214(E)	88	#5	38'-9"	
a215(E)	6	#5	35'-1"	
a216(E)	2	#5	31'-11"	
a217(E)	2	#5	39'-8"	
a218(E)	32	#5	1'-6"	
b200(E)	710	#5	29'-11"	
b201(E)	192	#6	35'-8"	
b202(E)	602	#5	27'-6"	
d200(E)	800	#5	7'-0"	
d201(E)	800	#5	8'-5"	
e200(E)	80	#4	18'-4"	
e201(E)	112	#4	18'-8"	
e202(E)	48	#4	19'-8"	
e203(E)	32	#4	25'-2"	
e204(E)	40	#4	28'-8"	
m200(E)	11	#6	26'-11"	
m201(E)	5	#6	31'-9"	
m202(E)	8	#6	3'-7"	
m203(E)	45	#6	7'-2"	
m204(E)	18	#6	2'-8"	
m205(E)	9	#6	5'-8"	
m206(E)	9	#6	1'-2"	
m207(E)	6	#6	39'-7"	
m208(E)	10	#6	7'-4"	
s200(E)	48	#5	8'-0"	
s201(E)	48	#5	10'-10"	
s202(E)	54	#5	9'-8"	
s203(E)	54	#5	14'-4"	
Concrete Superstructure			Cu. Yd.	602.0
Protective Coat			Sq. Yd.	2,027
Reinf. Bars, Epoxy Coated			Pound	149,300
Bridge Deck Grooving (Longitudinal)			Sq. Yd.	1,205
Diamond Grinding (Bridge Section)			Sq. Yd.	1,650

Bars indicated thus 4x4-#4 etc. indicates 4 lines of bars with 4 lengths per line.

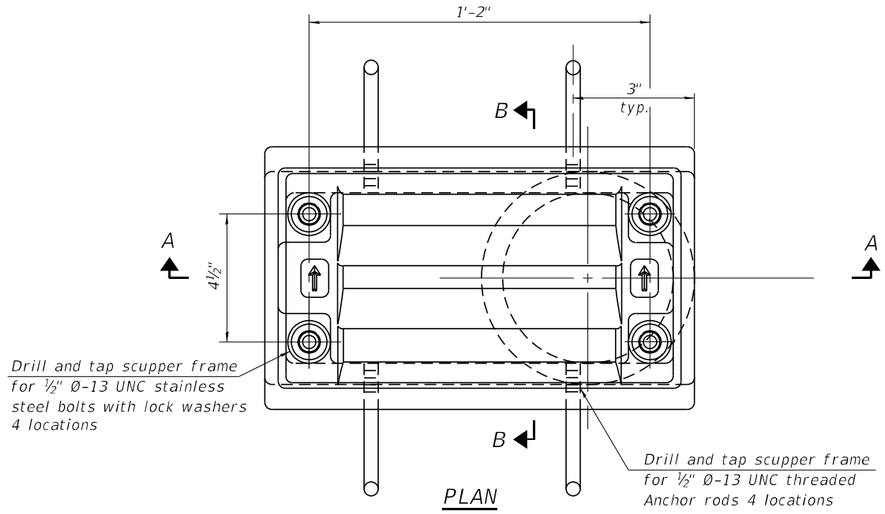

PLAN

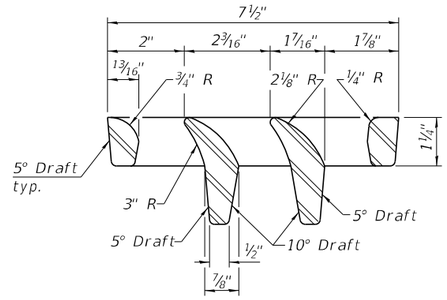

VANE GRATE DETAIL

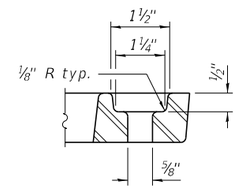

GRATE BOLT HOLE DETAIL

Notes:

All cast iron parts shall be gray iron conforming to the requirements of AASHTO M105, Class 35B and AASHTO M306.

Bolts, anchor rods, nuts and washers shall be according to ASTM A307 and shall be galvanized according to AASHTO M232. As an alternate stainless steel may be used.

Stainless steel hardware shall be according to Article 1006.29(d) of the Standard Specifications.

Structural steel weldments of equal sections and of the same configuration may be substituted for the cast iron scupper frames and downspouts; however, the scupper grates shall remain cast iron. Fillet or full penetration welds shall be used for the weldments. Details shall be submitted to the Engineer for approval.

Structural steel scupper frames and downspouts, when utilized, shall be galvanized according to AASHTO M111.

As an alternate, fiberglass may be used for downspouts according to ASTM D2996 with a short-time rupture strength hoop tensile stress of 30,000 psi min. in lieu of the cast iron or structural steel.

Exterior surfaces of downspouts and exterior exposed surfaces of the scupper frame below deck shall be treated as specified on sheet 3 of 70.

The Contractor shall take appropriate measures to assure that Protective Coat is not applied to the scupper.

Cost of the grate, frame, downspout, anchor rods, nuts and washers including complete installation of the scupper shall be paid for at the contract unit price for Drainage Scuppers, DS-11.

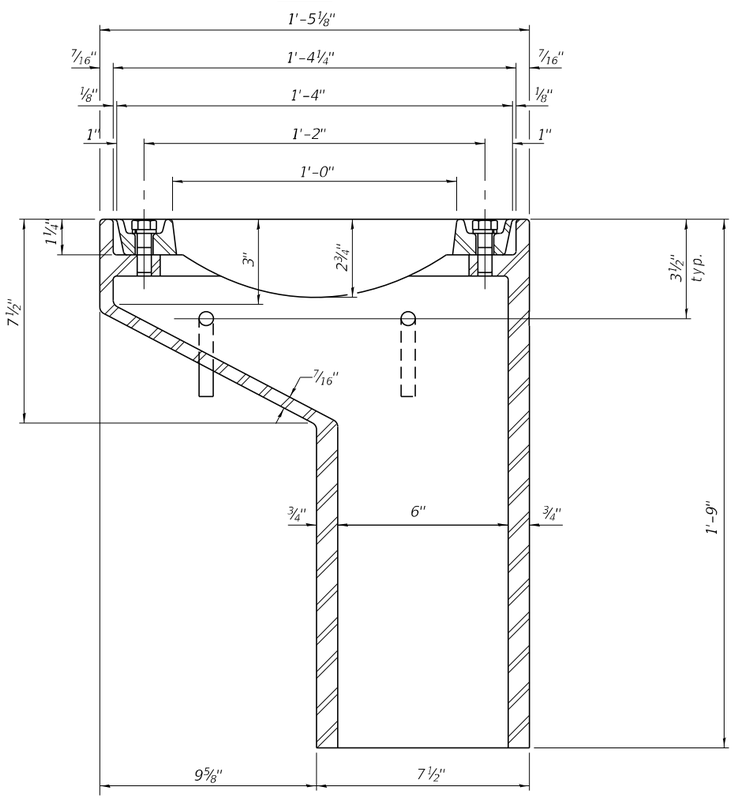

SECTION A-A

See sheets 26 & 27 of 70 for scupper location relative to parapet.

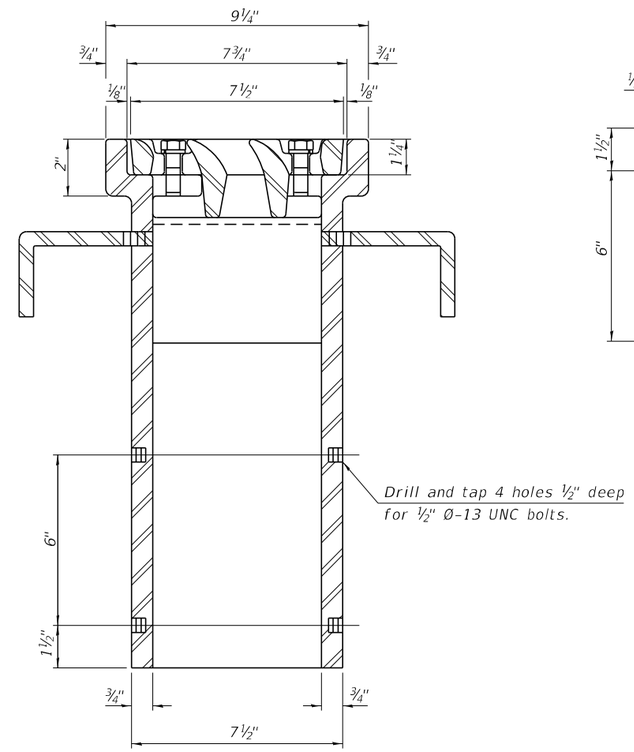

SECTION B-B

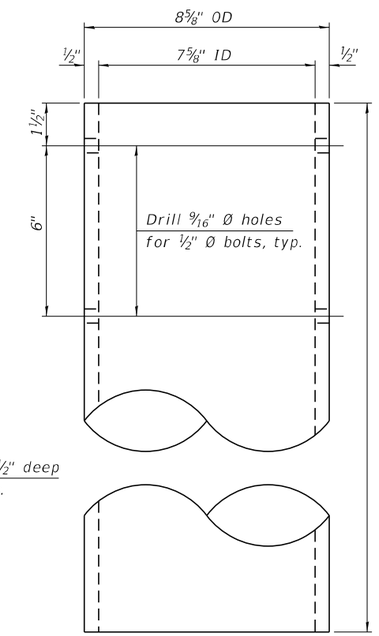

DOWNSPOUT

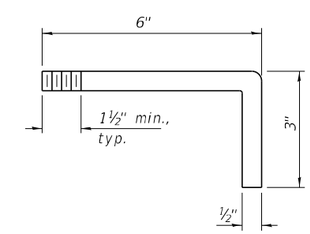

ANCHOR ROD DETAIL

SN 058-0139 (E.B.)
BILL OF MATERIAL

ITEM	UNIT	QUANTITY
Drainage Scuppers, DS-11	Each	4

SN 058-0140 (W.B.)
BILL OF MATERIAL

ITEM	UNIT	QUANTITY
Drainage Scuppers, DS-11	Each	4

DS-11 4-4-2025

FILE NAME = 190501-sht-bridge.dgn	USER NAME = rhosick	DESIGNED - S.M.S.	REVISED -	STATE OF ILLINOIS DEPARTMENT OF TRANSPORTATION	DRAINAGE SCUPPERS, DS-11 SN 058-0139(E.B.) & 058-0140(W.B.)	F.A.I.	SECTION	COUNTY	TOTAL SHEETS	SHEET NO.
HAMPTON, LENZINI AND RENWICK, INC. 3085 STEVENSON DRIVE, SUITE 201 SPRINGFIELD, ILLINOIS 62703		CHECKED - S.W.M.	REVISED -			72	(58-63HVB)BR	MACON	122	68
ILLINOIS PROFESSIONAL DESIGN FIRM LS / PE / SE CORP. 184.000959	PLOT SCALE =	DRAWN - R.D.H.	REVISED -		SHEET NO. 28 OF 70 SHEETS			CONTRACT NO. 74705		
	PLOT DATE = 8/21/2025	CHECKED - S.M.S.	REVISED -					ILLINOIS FED. AID PROJECT		

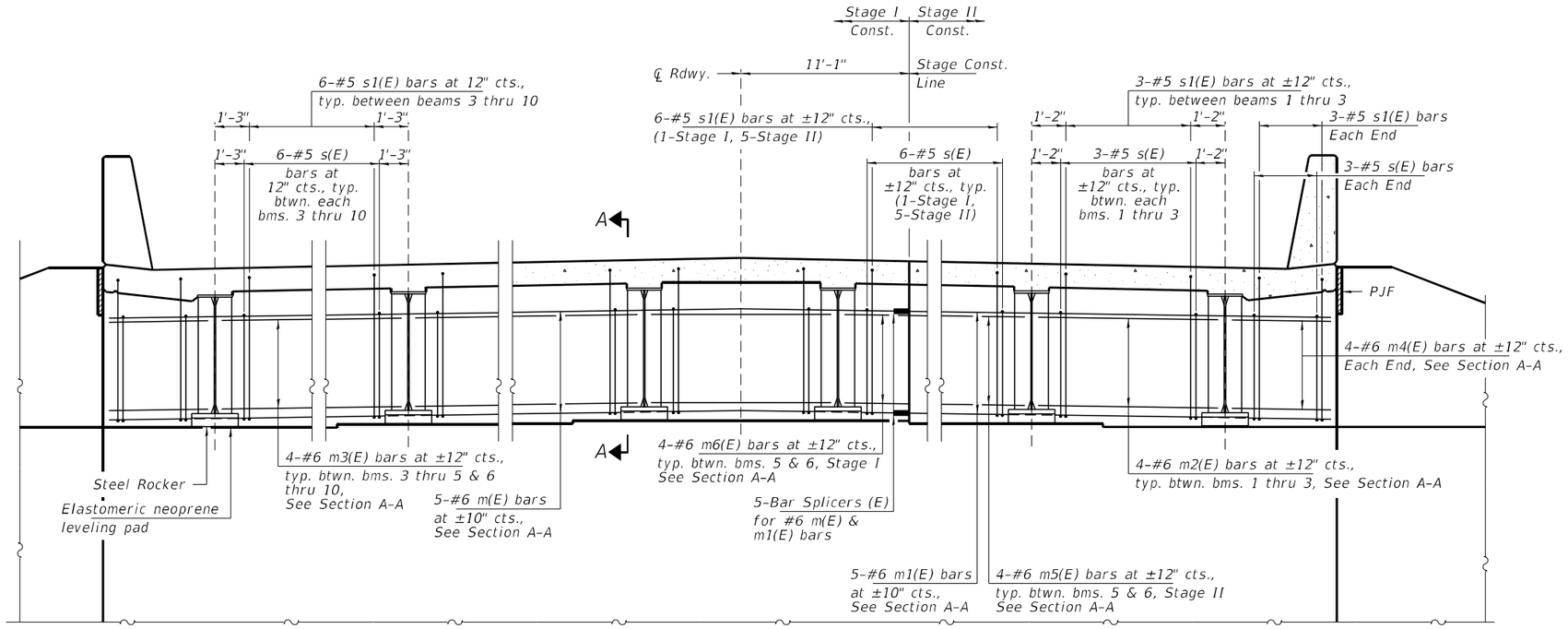

DIAPHRAGM AT SOUTH ABUTMENT

(Looking South)

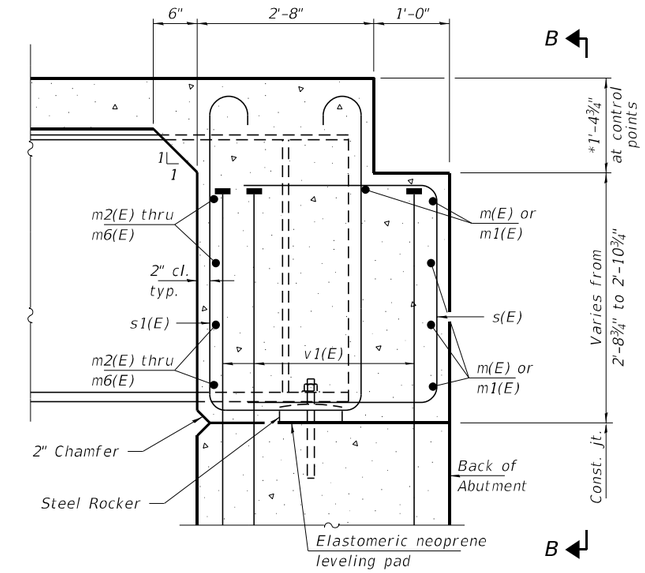

SECTION A-A

(at Rt. ∠'s)

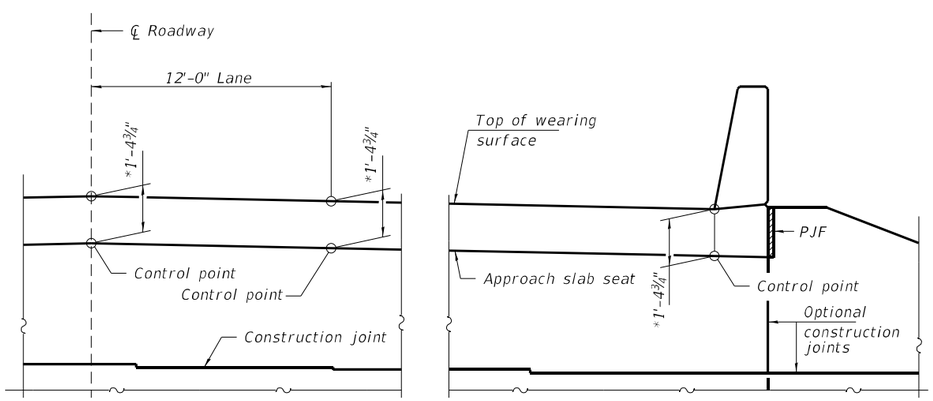

VIEW B-B

*Prior to grinding.

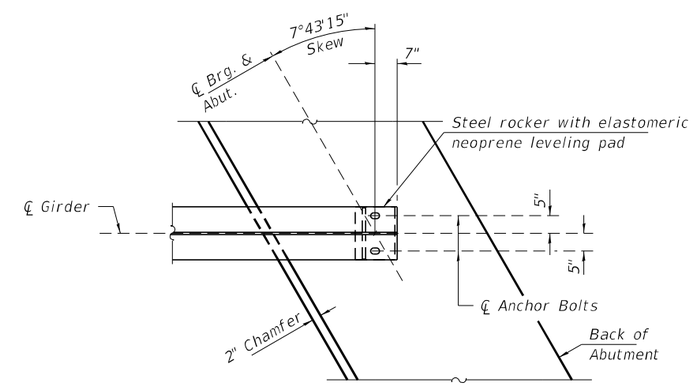

PLAN AT ABUTMENT

(Showing bottom flange of beam)

Notes:
See sheet 26 of 70 for superstructure details and Bill of Material.
See sheet 34 of 70 for PJF details.
The s(E) and s1(E) bars shall be placed parallel to the beams. Spacing for these bars shall be at right angles to the beams.
The approach slab seat shall have a constant slope determined from the control points shown.

DIA-SB-R 4-4-2025

FILE NAME = 190501-sht-bridge.dgn	USER NAME = rhosick	DESIGNED - S.M.S.	REVISED -	STATE OF ILLINOIS DEPARTMENT OF TRANSPORTATION	DIAPHRAGM DETAILS (S. ABUT.) (W.B.) SN 058-0139(E.B.) & 058-0140(W.B.)	F.A.I.	SECTION	COUNTY	TOTAL SHEETS / SHEET NO.
HAMPTON, LENZINI AND RENWICK, INC. 3085 STEVENSON DRIVE, SUITE 201 SPRINGFIELD, ILLINOIS 62703		CHECKED - S.W.M.	REVISED -			72	(58-63HVB)BR	MACON	122 / 69
ILLINOIS PROFESSIONAL DESIGN FIRM LS / PE / SE CORP. 184.000959	PLOT SCALE =	DRAWN - R.D.H.	REVISED -					CONTRACT NO. 74705	
	PLOT DATE = 8/21/2025	CHECKED - S.M.S.	REVISED -		SHEET NO. 29 OF 70 SHEETS			ILLINOIS FED. AID PROJECT	

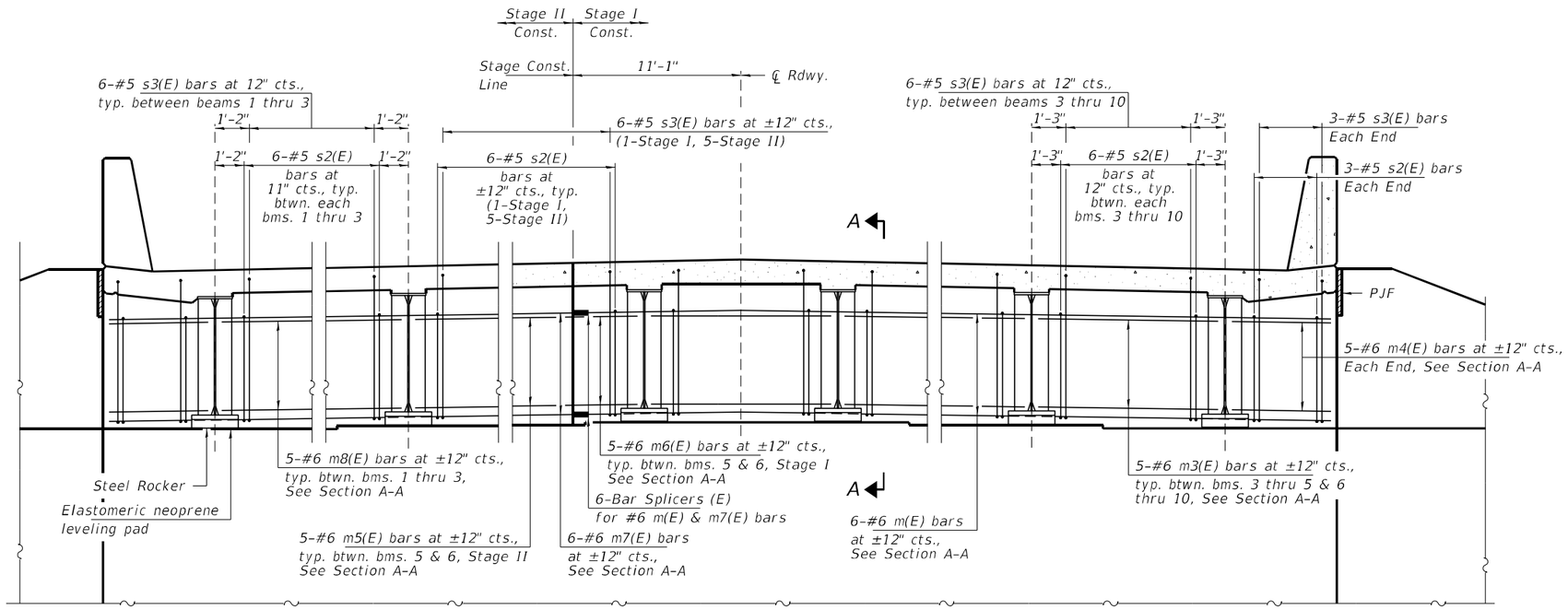

DIAPHRAGM AT NORTH ABUTMENT

(Looking North)

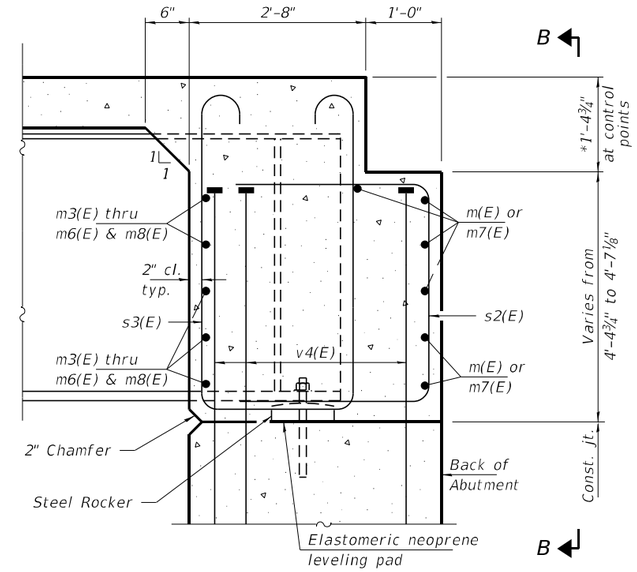

SECTION A-A

(at Rt. ∠'s)

*Prior to grinding.

Notes:

See sheet 26 of 70 for superstructure details and Bill of Material.

See sheet 38 of 70 for PJF details.

The s2(E) and s3(E) bars shall be placed parallel to the beams. Spacing for these bars shall be at right angles to the beams.

The approach slab seat shall have a constant slope determined from the control points shown.

See sheet 29 of 70 for Plan at abutment & View B-B.

DIA-SB-R 4-4-2025

FILE NAME = 190501-sht-bridge.dgn	USER NAME = rhosick	DESIGNED - S.M.S.	REVISED -	STATE OF ILLINOIS DEPARTMENT OF TRANSPORTATION	DIAPHRAGM DETAILS (N. ABUT.) (W.B.) SN 058-0139(E.B.) & 058-0140(W.B.)	F.A.I.	SECTION	COUNTY	TOTAL SHEETS / SHEET NO.
HAMPTON, LENZINI AND RENWICK, INC. 3085 STEVENSON DRIVE, SUITE 201 SPRINGFIELD, ILLINOIS 62703 ILLINOIS PROFESSIONAL DESIGN FIRM LS / PE / SE CORP. 184.000959		CHECKED - S.W.M.	REVISED -			72	(58-63HVB)BR	MACON	122 / 70
	PLOT SCALE =	DRAWN - R.D.H.	REVISED -					CONTRACT NO. 74705	
	PLOT DATE = 8/21/2025	CHECKED - S.M.S.	REVISED -		SHEET NO. 30 OF 70 SHEETS		ILLINOIS	FED. AID PROJECT	

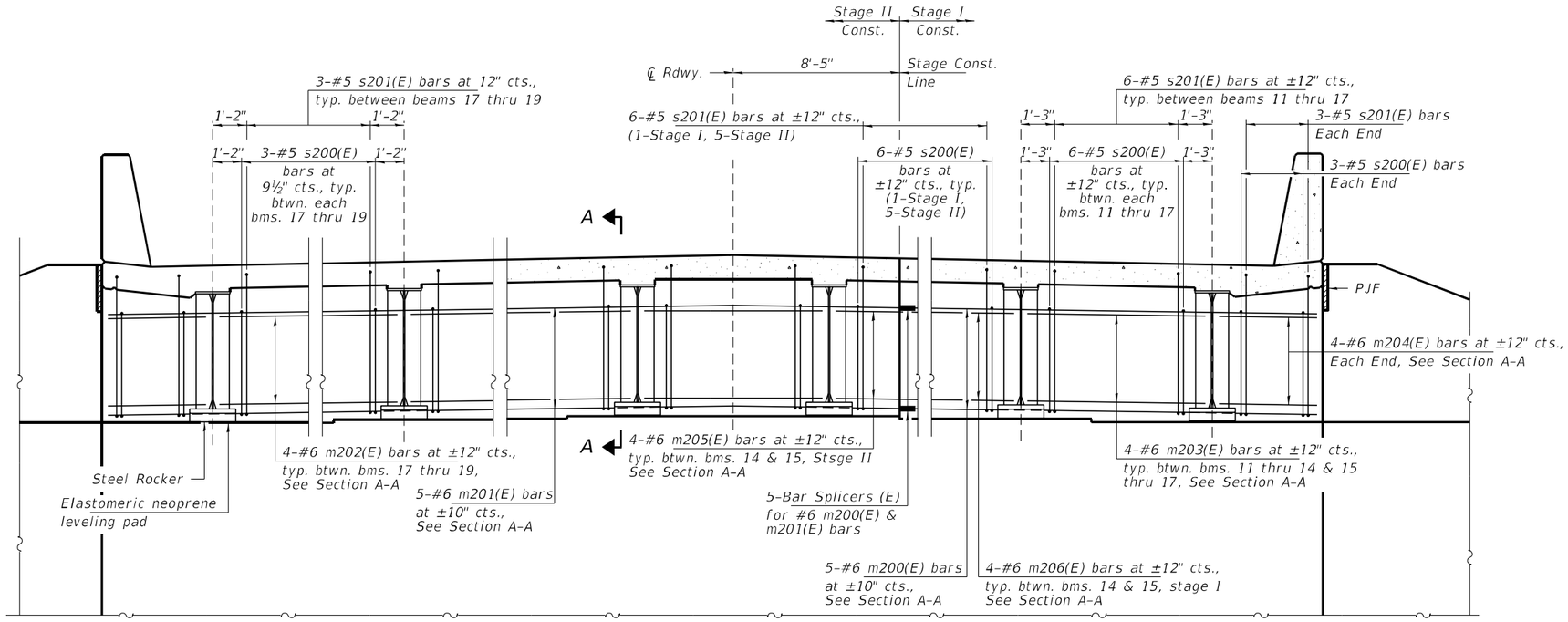

DIAPHRAGM AT SOUTH ABUTMENT

(Looking South)

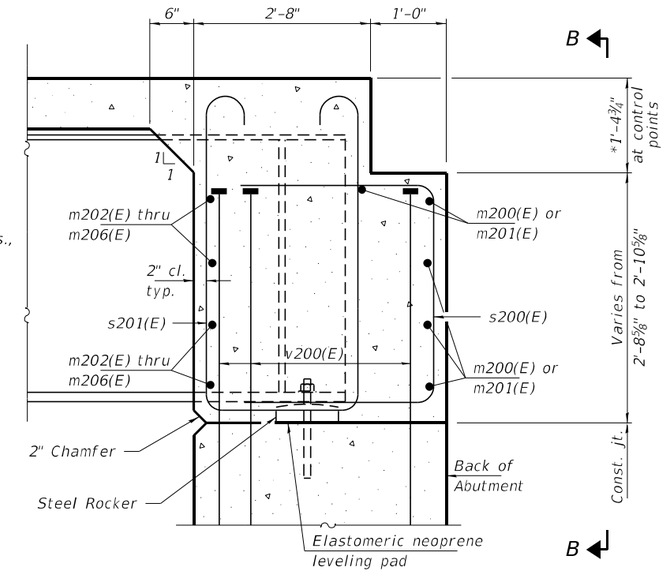

SECTION A-A

(at Rt. ℄'s)

*Prior to grinding.

Notes:

See sheet 27 of 70 for superstructure details and Bill of Material.

See sheet 42 of 70 for PJF details.

The s200(E) and s201(E) bars shall be placed parallel to the beams. Spacing for these bars shall be at right angles to the beams.

The approach slab seat shall have a constant slope determined from the control points shown.

See sheet 29 of 70 for Plan at abutment & View B-B.

DIA-SB-R 4-4-2025

FILE NAME = 190501-sht-bridge.dgn	USER NAME = rhosick	DESIGNED - S.M.S.	REVISED -	STATE OF ILLINOIS DEPARTMENT OF TRANSPORTATION	DIAPHRAGM DETAILS (S. ABUT.) (E.B.) SN 058-0139(E.B.) & 058-0140(W.B.)	F.A.I.	SECTION	COUNTY	TOTAL SHEETS / SHEET NO.
HAMPTON, LENZINI AND RENWICK, INC. 3085 STEVENSON DRIVE, SUITE 201 SPRINGFIELD, ILLINOIS 62703 ILLINOIS PROFESSIONAL DESIGN FIRM LS / PE / SE CORP. 184.000959		CHECKED - S.W.M.	REVISED -			72	(58-63HVB)BR	MACON	122 / 71
	PLOT SCALE =	DRAWN - R.D.H.	REVISED -					CONTRACT NO. 74705	
	PLOT DATE = 8/21/2025	CHECKED - S.M.S.	REVISED -		SHEET NO. 31 OF 70 SHEETS		ILLINOIS	FED. AID PROJECT	

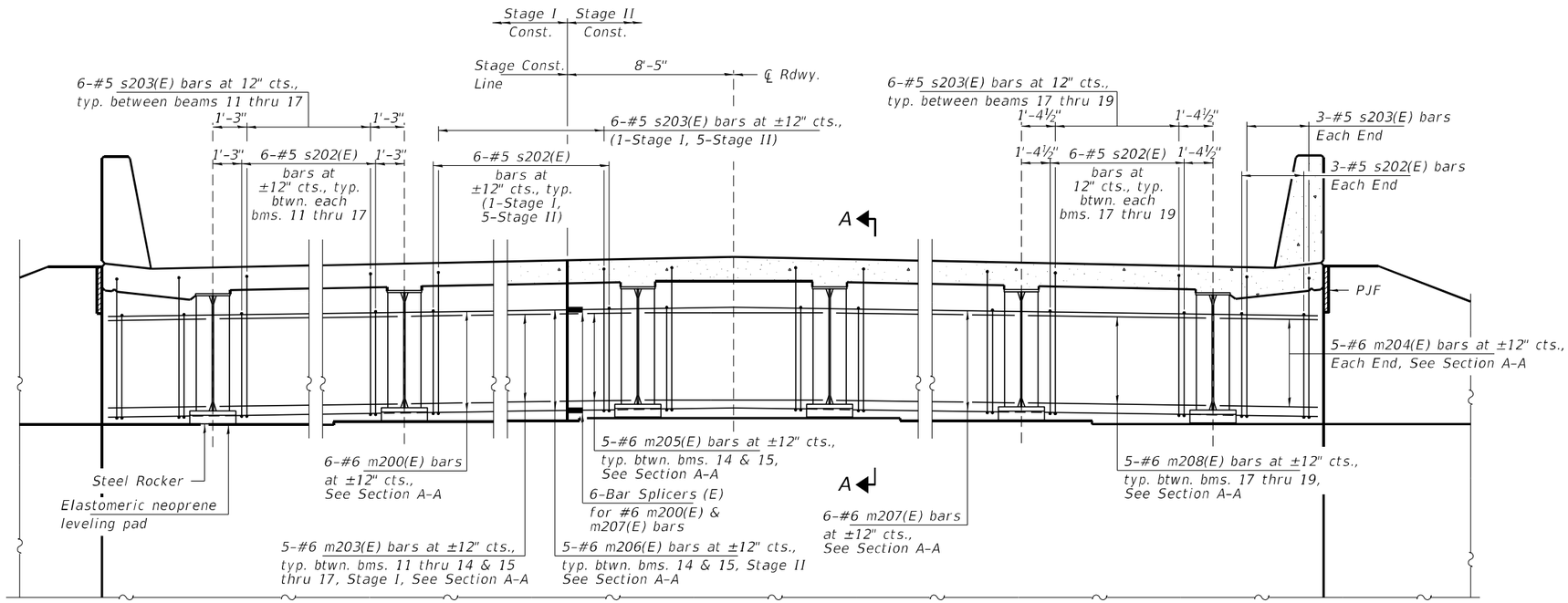

DIAPHRAGM AT NORTH ABUTMENT

(Looking North)

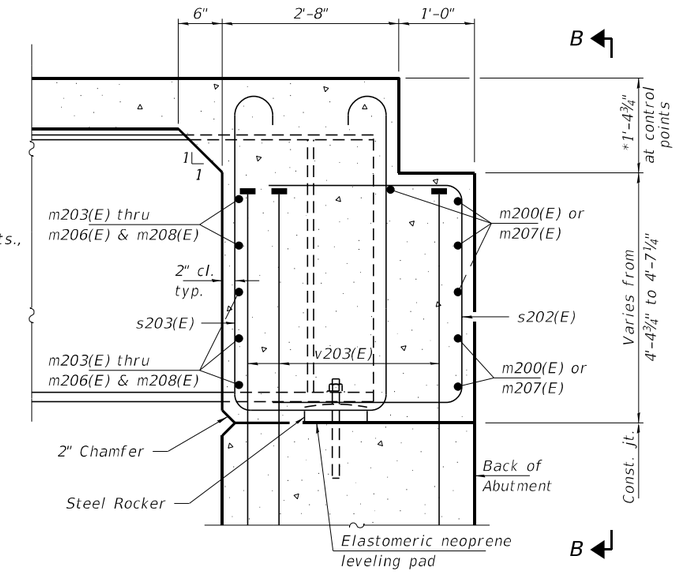

SECTION A-A

(at Rt. ∠'s)

*Prior to grinding.

Notes:

See sheet 27 of 70 for superstructure details and Bill of Material.

See sheet 46 of 70 for PJF details.

The s202(E) and s203(E) bars shall be placed parallel to the beams. Spacing for these bars shall be at right angles to the beams.

The approach slab seat shall have a constant slope determined from the control points shown.

See sheet 29 of 70 for Plan at abutment & View B-B.

DIA-SB-R 4-4-2025

FILE NAME = 190501-sht-bridge.dgn	USER NAME = rhosick	DESIGNED - S.M.S.	REVISED -	STATE OF ILLINOIS DEPARTMENT OF TRANSPORTATION	DIAPHRAGM DETAILS (N. ABUT.) (E.B.) SN 058-0139(E.B.) & 058-0140(W.B.)	F.A.I.	SECTION	COUNTY	TOTAL SHEETS / SHEET NO.
HAMPTON, LENZINI AND RENWICK, INC. 3085 STEVENSON DRIVE, SUITE 201 SPRINGFIELD, ILLINOIS 62703 ILLINOIS PROFESSIONAL DESIGN FIRM LS / PE / SE CORP. 184.000959		CHECKED - S.W.M.	REVISED -			72	(58-63HVB)BR	MACON	122 / 72
	PLOT SCALE =	DRAWN - R.D.H.	REVISED -					CONTRACT NO. 74705	
	PLOT DATE = 8/21/2025	CHECKED - S.M.S.	REVISED -		SHEET NO. 32 OF 70 SHEETS		ILLINOIS	FED. AID PROJECT	

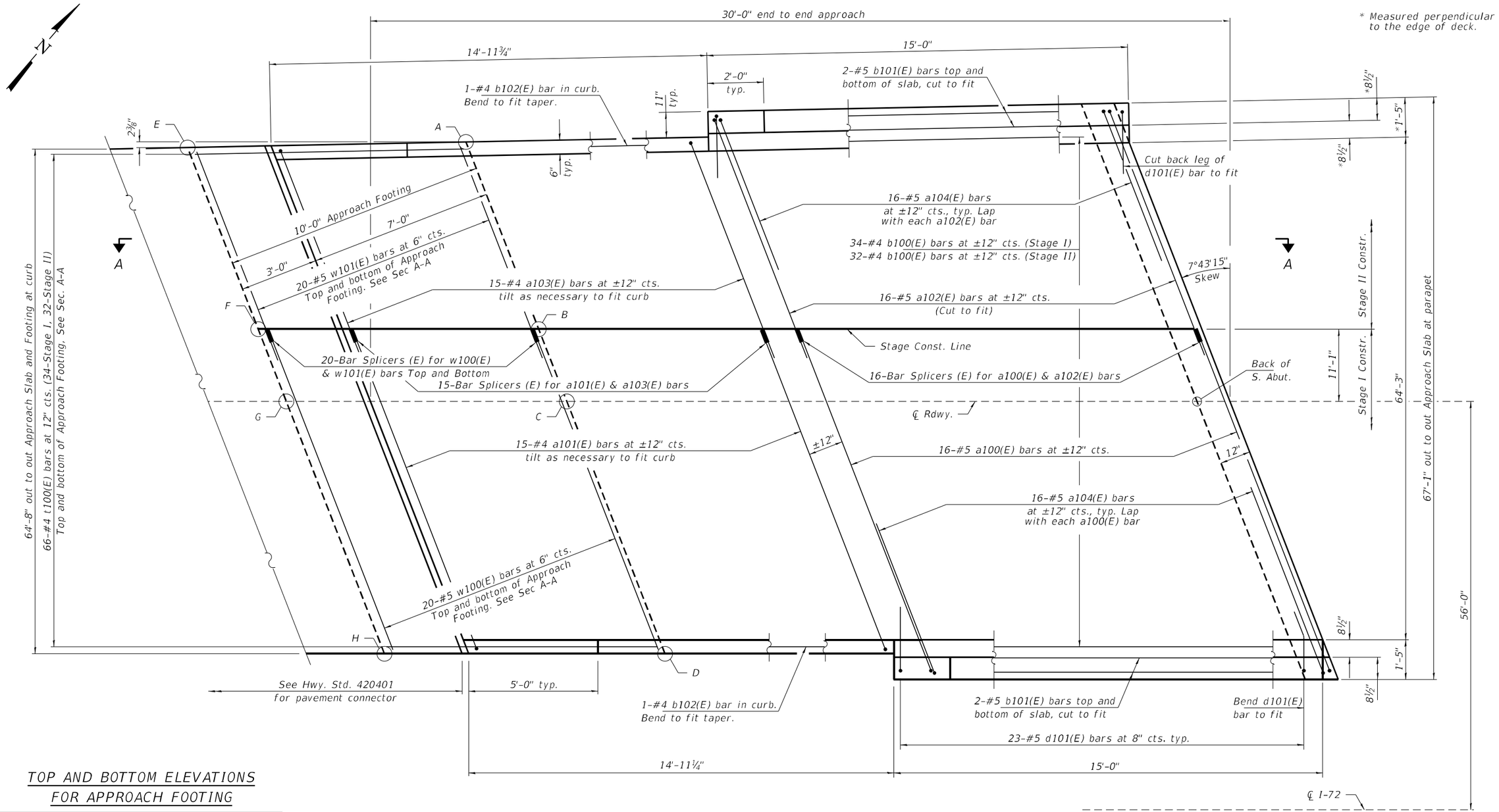

PLAN - SOUTH APPROACH SLAB

TOP AND BOTTOM ELEVATIONS FOR APPROACH FOOTING

South Approach (W.B.)				
Point/ Location	Station	Offset	Top	Bottom
A - NW	722+39.05	-42.28	711.10	710.26
B - N. SCL	722+43.28	-11.08	711.73	710.90
C - N. CL	722+44.78	0.00	711.90	711.07
D - NE	722+47.83	22.50	711.52	710.69
E - SW	722+28.99	-42.08	711.06	710.23
F - S. SCL	722+33.19	-11.08	711.70	710.86
G - S. CL	722+34.69	0.00	711.87	711.03
H - SE	722+37.74	22.50	711.49	710.65

Notes: See Sec. A-A on sheet 36 of 70.

For cross section of approach slab, see sheet 34 of 70.

(Sheet 1 of 4)

FILE NAME = 190501-sht-bridge.dgn	USER NAME = rhosick	DESIGNED - S.M.S.	REVISED -	STATE OF ILLINOIS DEPARTMENT OF TRANSPORTATION	PRECAST BRIDGE APPROACH SLAB (S. APPR.) (W.B.) SN 058-0139(E.B.) & 058-0140(W.B.)	F.A.I.	SECTION	COUNTY	TOTAL SHEETS / SHEET NO.
HAMPTON, LENZINI AND RENWICK, INC. 3085 STEVENSON DRIVE, SUITE 201 SPRINGFIELD, ILLINOIS 62703 ILLINOIS PROFESSIONAL DESIGN FIRM LS / PE / SE CORP. 184.000959		CHECKED - S.W.M.	REVISED -			72	(58-63HVB)BR	MACON	122 / 73
	PLOT SCALE =	DRAWN - R.D.H.	REVISED -					CONTRACT NO. 74705	
	PLOT DATE = 8/21/2025	CHECKED - S.M.S.	REVISED -		SHEET NO. 33 OF 70 SHEETS		ILLINOIS FED. AID PROJECT		

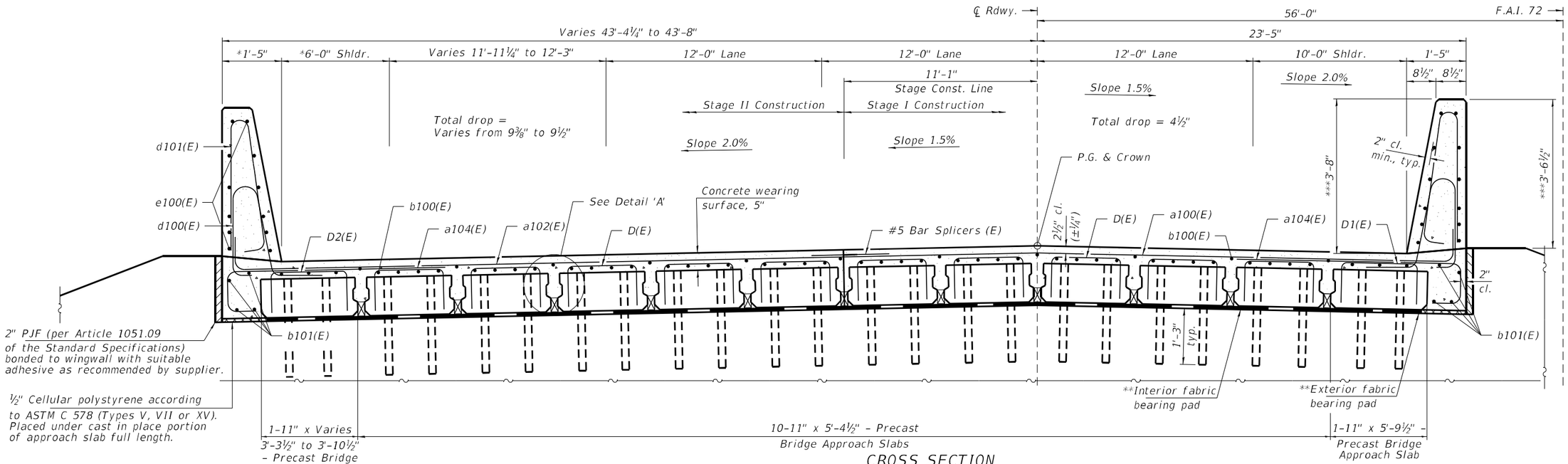

CROSS SECTION

Near Abutment
(Looking North)

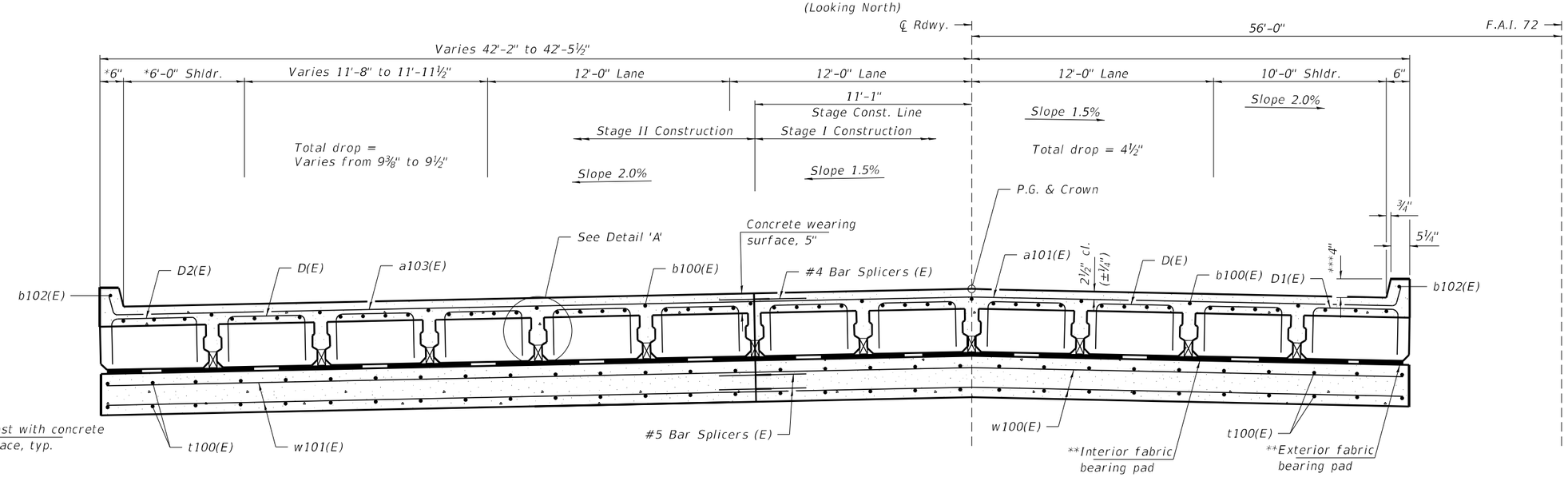

CROSS SECTION

at approach footing
(Looking North)

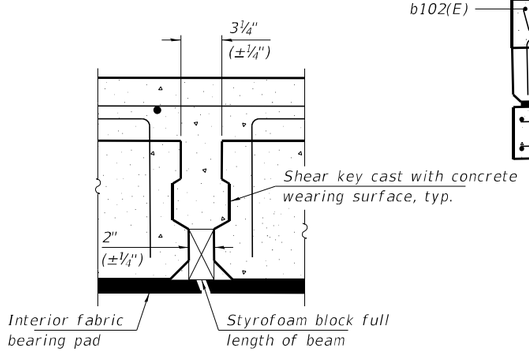

DETAIL 'A'

* Measured perpendicular to the edge of deck.

** Fabric bearing pads at the expansion end shall be recessed ¼" into the approach footing and bonded. Adjusting shims, when required, shall be bonded to the top of the fabric bearing pads.

*** After Grinding

(Sheet 2 of 4)

FILE NAME = 190501-sht-bridge.dgn	USER NAME = rhosick	DESIGNED - S.M.S.	REVISED -	STATE OF ILLINOIS DEPARTMENT OF TRANSPORTATION	PRECAST BRIDGE APPROACH SLAB (S. APPR.) (W.B.) SN 058-0139(E.B.) & 058-0140(W.B.)	F.A.I.	SECTION	COUNTY	TOTAL SHEETS / SHEET NO.
HAMPTON, LENZINI AND RENWICK, INC. 3345 STEVENSON DRIVE, SUITE 201 SPRINGFIELD, ILLINOIS 62703		CHECKED - S.W.M.	REVISED -			72	(58-63HVB)BR	MACON	122 / 74
ILLINOIS PROFESSIONAL DESIGN FIRM LS / PE / SE CORP. 184-000959	PLOT SCALE =	DRAWN - R.D.H.	REVISED -					CONTRACT NO. 74705	
	PLOT DATE = 8/21/2025	CHECKED - S.M.S.	REVISED -		SHEET NO. 34 OF 70 SHEETS		ILLINOIS FED. AID PROJECT		

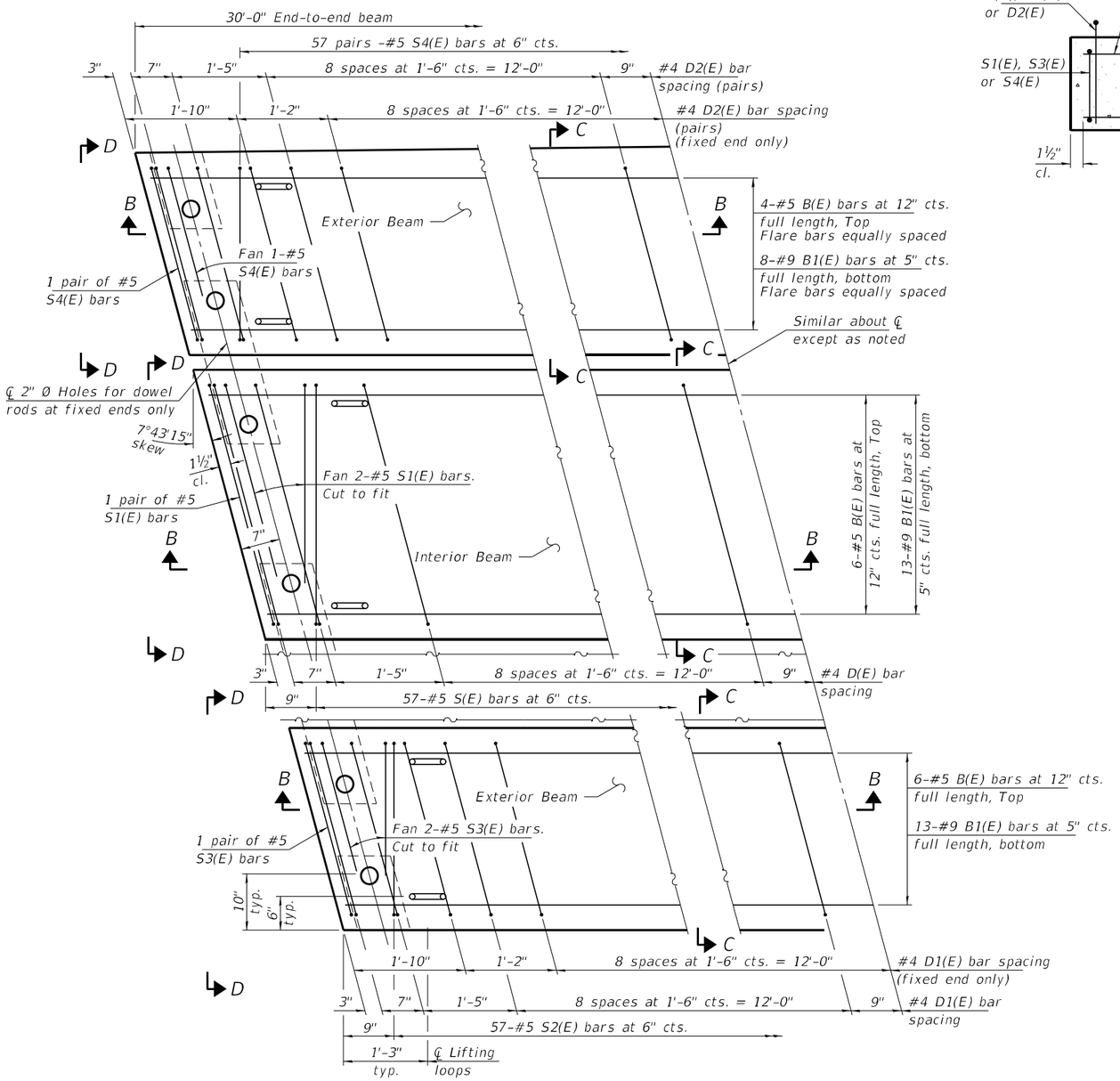

PLAN VIEW

(showing precast bridge approach beams)
(Spacing of D(E), D1(E) and D2(E) bars may be adjusted up to 3" to miss the dowel rod holes and the lifting loops at the beam ends)

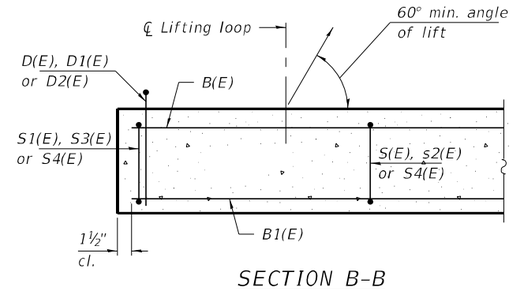

SECTION B-B

Notes:

The precast bridge approach slab shall be according to Section 504 of the Standard Specifications and shall be paid for at the contract unit price per square foot for Precast Bridge Approach Slab.

Cast-in-place substitution of Precast Bridge Approach Slab is not allowed.

The top surface of precast bridge approach slabs shall be finished similar to precast prestressed deck beams with concrete wearing surface as specified in the IDOT "Manual for Fabrication of Precast Prestressed Concrete Products."

Two ⅛" fabric adjusting shims of the dimensions of the exterior bearing pad shall be provided for each bearing pad location. Cost included with Precast Bridge Approach Slab.

A minimum 2 ½" Ø lifting pins shall be used to engage the lifting loops during handling.

Compressive strength of precast concrete, f'c shall be 6,000 psi.

Compressive strength of precast concrete during initial lifting, f'ci shall be 5,000 psi.

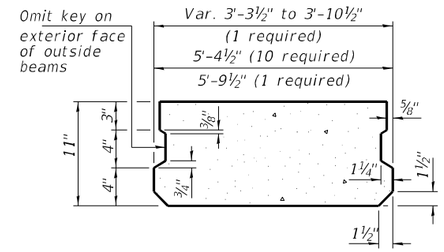

SECTION C-C

(Showing dimensions)

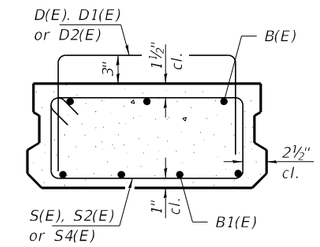

SECTION C-C

(Showing reinforcement)

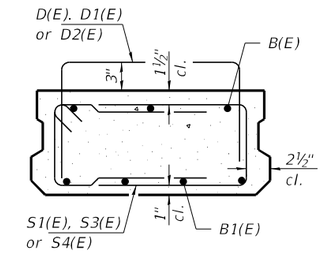

SECTION D-D

(Showing reinforcement)

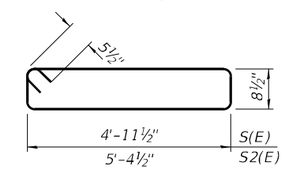

BARS S(E) & S2(E)

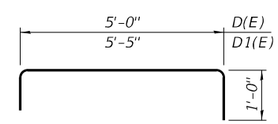

BARS D(E) & D1(E)

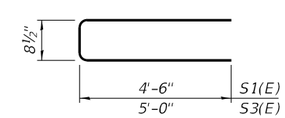

BARS S1(E) & S3(E)

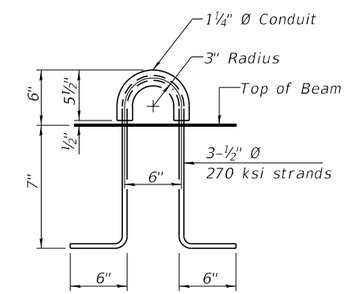

LIFTING LOOP DETAIL

(An alternate lifting loop with a proof load of 25,000 lbs. and utilized according to the manufacturer's recommendations may be used)

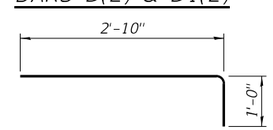

BAR D2(E)

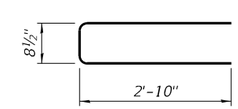

BAR S4(E)

BAR LIST
11" X 3'-3½" TO 3'-10½" EXTERIOR BEAM

(For information only)

Bar	No.	Size	Length	Shape
B(E)	4	#5	29'-8"	—
B1(E)	8	#9	29'-8"	—
D2(E)	64	#4	3'-10"	⌐
S4(E)	120	#5	6'-5"	⊏

BAR LIST
11" X 5'-4½" INTERIOR BEAM

(For information only)

Bar	No.	Size	Length	Shape
B(E)	6	#5	29'-8"	—
B1(E)	13	#9	29'-8"	—
D(E)	22	#4	7'-0"	⌐
S(E)	57	#5	12'-3"	⊏
S1(E)	8	#5	9'-9"	⊏

BAR LIST
11" X 5'-9½" EXTERIOR BEAM

(For information only)

Bar	No.	Size	Length	Shape
B(E)	6	#5	29'-8"	—
B1(E)	13	#9	29'-8"	—
D1(E)	32	#4	7'-5"	⌐
S2(E)	57	#5	13'-1"	⊏
S3(E)	8	#5	10'-9"	⊏

(Sheet 3 of 4)

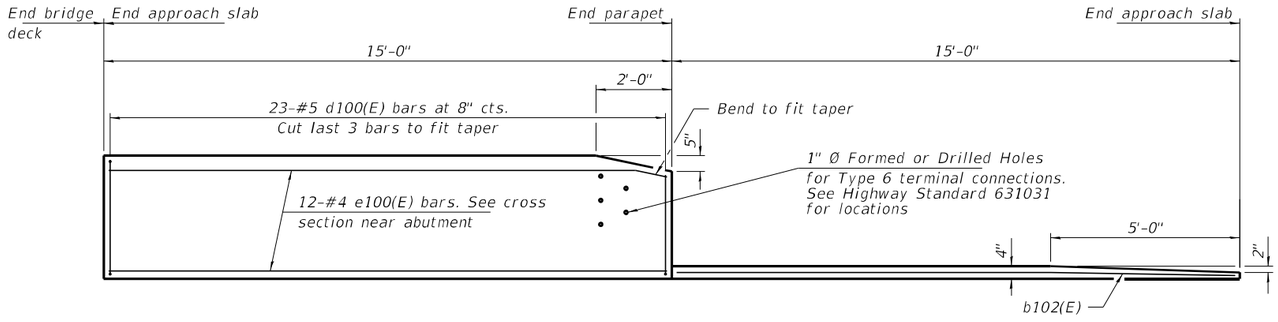

INSIDE ELEVATION OF PARAPET AND CURB

Notes:

The joint opening shall be adjusted for temperature per Article 520.04 of the Standard Specifications. However, since this detail is for jointless structures, the length of bridge used to calculate the adjustment shall be equal to half the total bridge length plus the length of the bridge approach slab.

After precast bridge approach slabs have been erected, holes shall be drilled into abutment and anchor dowels placed. Dowel holes shall be filled with non-shrink grout to top of precast slab and cured according to Article 1020.13(a)(3) or 1020.13(a)(5) of the Standard Specifications for a minimum of 24 hours before casting the shear keys and wearing surface.

Any concrete poured monolithically with the wearing surface, such as curbs, shall not be paid for separately, but will be included in the cost of Concrete Wearing Surface, 5".

The strip seal shall extend 6" beyond the edge of the approach slab on each end.

Parapet concrete shall be paid for as Concrete Superstructure.

Approach footing concrete shall be paid for as Concrete Structures.

The approach footing maximum applied service bearing pressure (Qmax) = 2.0 ksf.

Cost of excavation for approach footing included with Concrete Structures.

For Granular Backfill for Structures and drainage treatment details, see sheet 2 of 70.

Cost of cellular polystyrene is included with Concrete Superstructure.

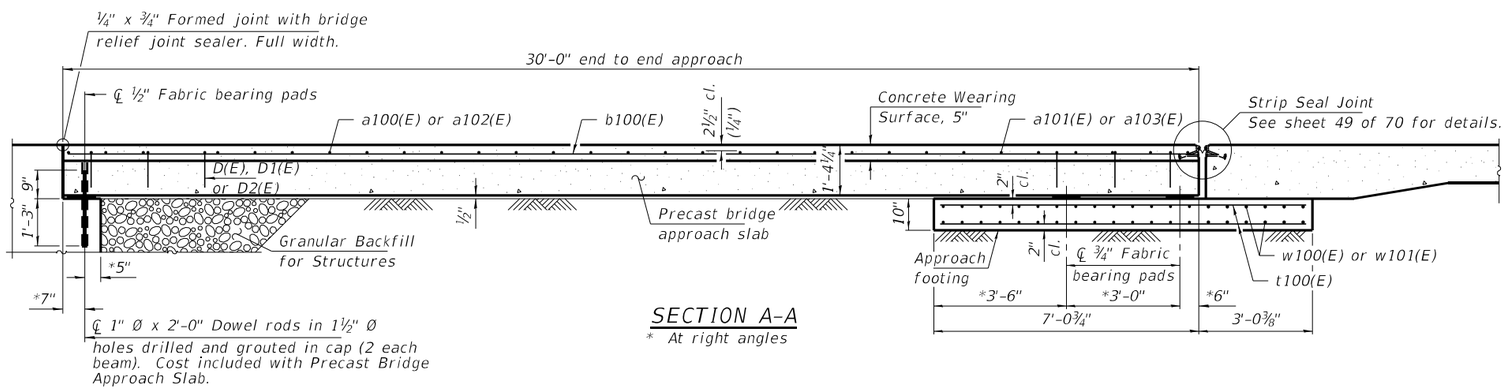

SECTION A-A

* At right angles

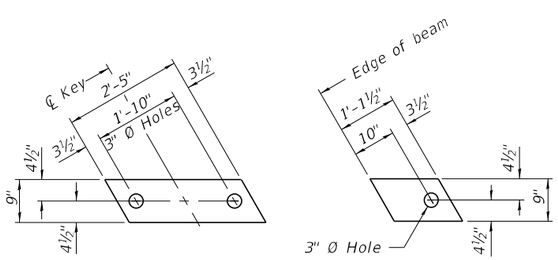

FABRIC BEARING PAD

Notes:

Bearing pads at fixed end shall be ½" thick and bearing pads at expansion end shall be ¾" thick.

Omit holes for fabric bearing pads at approach slab footing end of beams.

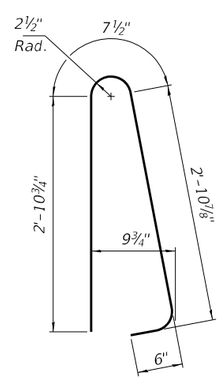

BAR d100(E)

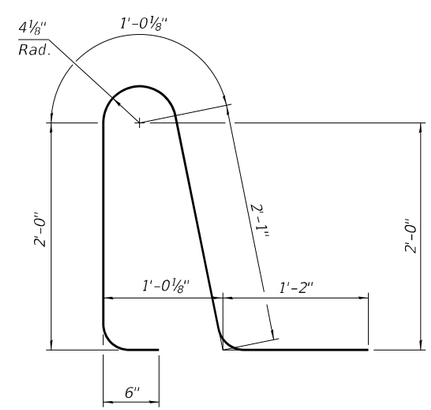

BAR d101(E)

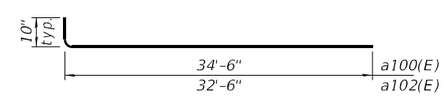

BAR a100(E) or a102(E)

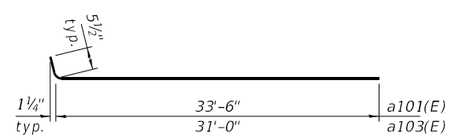

BAR a101(E) or a103(E)

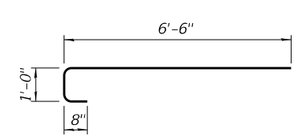

BAR a104(E)

SOUTH APPROACH (W.B.)
BILL OF MATERIAL

Bar	No.	Size	Length	Shape
a100(E)	16	#5	35'-4"	
a101(E)	15	#4	34'-0"	
a102(E)	16	#5	33'-4"	
a103(E)	15	#4	31'-6"	
a104(E)	32	#5	8'-2"	
b100(E)	66	#4	29'-8"	
b101(E)	8	#5	14'-8"	
b102(E)	2	#4	14'-7"	
d100(E)	46	#5	7'-0"	
d101(E)	46	#5	6'-10"	
e100(E)	24	#4	14'-8"	
t100(E)	132	#4	9'-9"	
w100(E)	40	#5	33'-7"	
w101(E)	40	#5	31'-0"	
Concrete Structures			Cu. Yd.	20.2
Concrete Superstructure			Cu. Yd.	4.2
Reinforcement Bars, Epoxy Coated			Pound	7,980
Protective Coat			Sq. Yd.	230
Bridge Deck Grooving (Longtudinal)			Sq. Yd.	160
Concrete Wearing Surface, 5"			Sq. Yd.	220
Precast Bridge Approach Slab			Sq. Ft.	1,894
Diamond Grinding (Bridge Section)			Sq. Yd.	200

(Sheet 4 of 4)

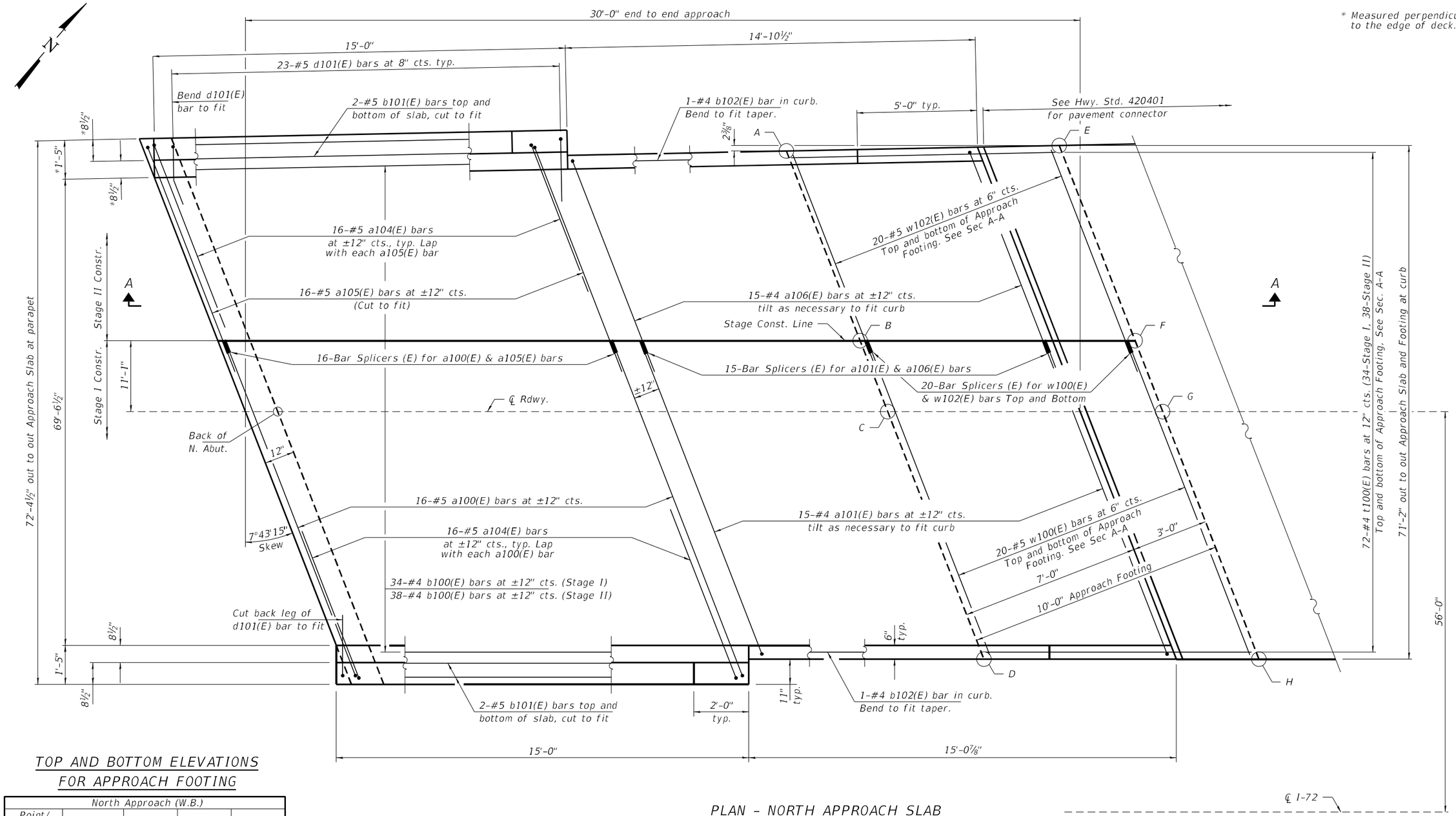

TOP AND BOTTOM ELEVATIONS FOR APPROACH FOOTING

North Approach (W.B.)				
Point/ Location	Station	Offset	Top	Bottom
A - SW	725+50.01	-48.50	710.31	709.47
B - S. SCL	725+55.08	-11.08	711.01	710.18
C - S. CL	725+56.59	0.00	711.16	710.33
D - SE	725+59.64	22.50	710.75	709.92
E - NW	725+60.08	-48.70	710.22	709.39
F - N. SCL	725+65.18	-11.08	710.93	710.09
G - N. CL	725+66.68	0.00	711.08	710.25
H - NE	725+69.73	22.50	710.66	709.83

PLAN - NORTH APPROACH SLAB

See Sec. A-A on sheet 40 of 70.

For cross section of approach slab, see sheet 38 of 70.

(Sheet 1 of 4)

FILE NAME = 190501-sht-bridge.dgn	USER NAME = rhosick	DESIGNED - S.M.S.	REVISED -
HAMPTON, LENZINI AND RENWICK, INC. 3345 STEVENSON DRIVE, SUITE 201 SPRINGFIELD, ILLINOIS 62703		CHECKED - S.W.M.	REVISED -
ILLINOIS PROFESSIONAL DESIGN FIRM LS / PE / SE CORP. 184.002959	PLOT SCALE =	DRAWN - R.D.H.	REVISED -
	PLOT DATE = 8/21/2025	CHECKED - S.M.S.	REVISED -

STATE OF ILLINOIS
DEPARTMENT OF TRANSPORTATION

PRECAST BRIDGE APPROACH SLAB (N. APPR.) (W.B.)
SN 058-0139(E.B.) & 058-0140(W.B.)

SHEET NO. 37 OF 70 SHEETS

F.A.I.	SECTION	COUNTY	TOTAL SHEETS	SHEET NO.
72	(58-63HVB)BR	MACON	122	77

CONTRACT NO. 74705

ILLINOIS | FED. AID PROJECT

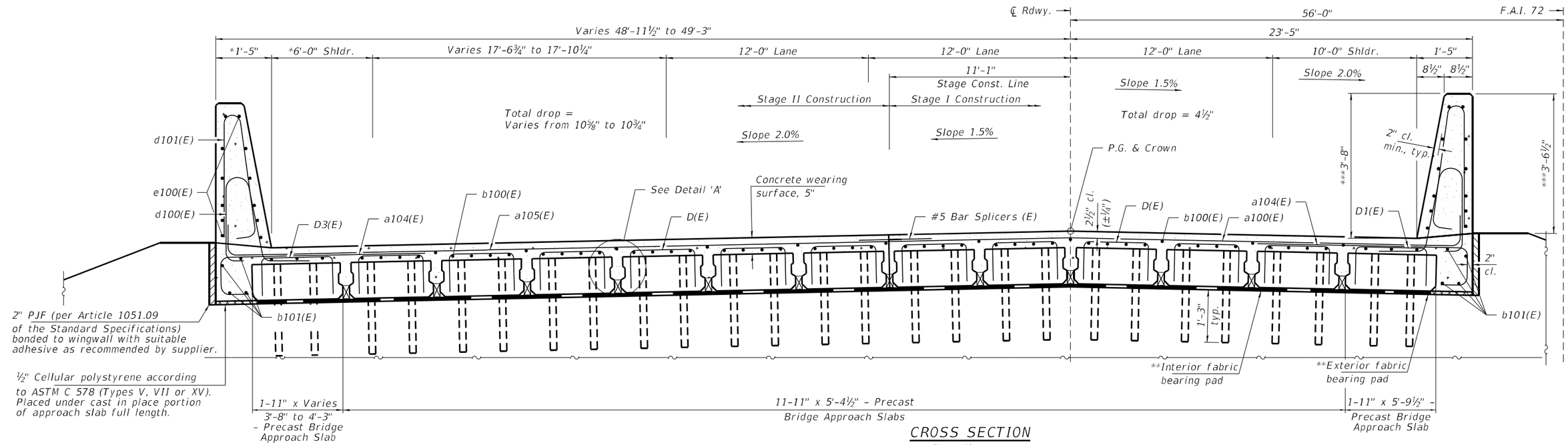

CROSS SECTION

Near Abutment
(Looking North)

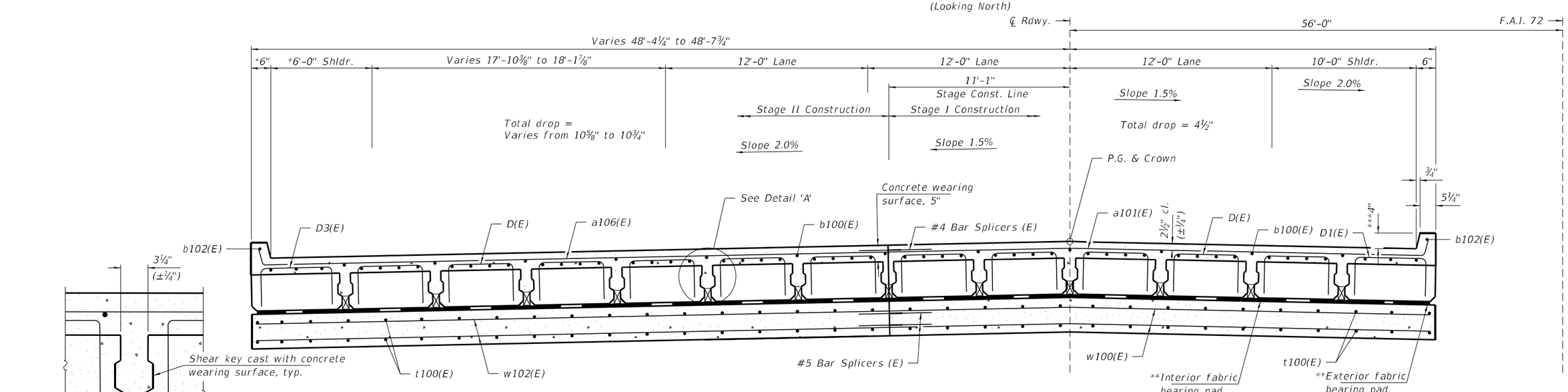

CROSS SECTION

at approach footing
(Looking North)

DETAIL 'A'

* Measured perpendicular to the edge of deck.

** Fabric bearing pads at the expansion end shall be recessed ¼" into the approach footing and bonded. Adjusting shims, when required, shall be bonded to the top of the fabric bearing pads.

*** After Grinding

(Sheet 2 of 4)

FILE NAME = 190501-sht-bridge.dgn	USER NAME = rhosick	DESIGNED - S.M.S.	REVISED -	STATE OF ILLINOIS DEPARTMENT OF TRANSPORTATION	PRECAST BRIDGE APPROACH SLAB (N. APPR.) (W.B.) SN 058-0139(E.B.) & 058-0140(W.B.)	F.A.I.	SECTION	COUNTY	TOTAL SHEETS / SHEET NO.
HAMPTON, LENZINI AND RENWICK, INC. 3345 STEVENSON DRIVE, SUITE 201 SPRINGFIELD, ILLINOIS 62703		CHECKED - S.W.M.	REVISED -			72	(58-63HVB)BR	MACON	122 / 78
ILLINOIS PROFESSIONAL DESIGN FIRM LS / PE / SE CORP. 184-000959	PLOT SCALE =	DRAWN - R.D.H.	REVISED -					CONTRACT NO. 74705	
	PLOT DATE = 8/21/2025	CHECKED - S.M.S.	REVISED -		SHEET NO. 38 OF 70 SHEETS		ILLINOIS	FED. AID PROJECT	

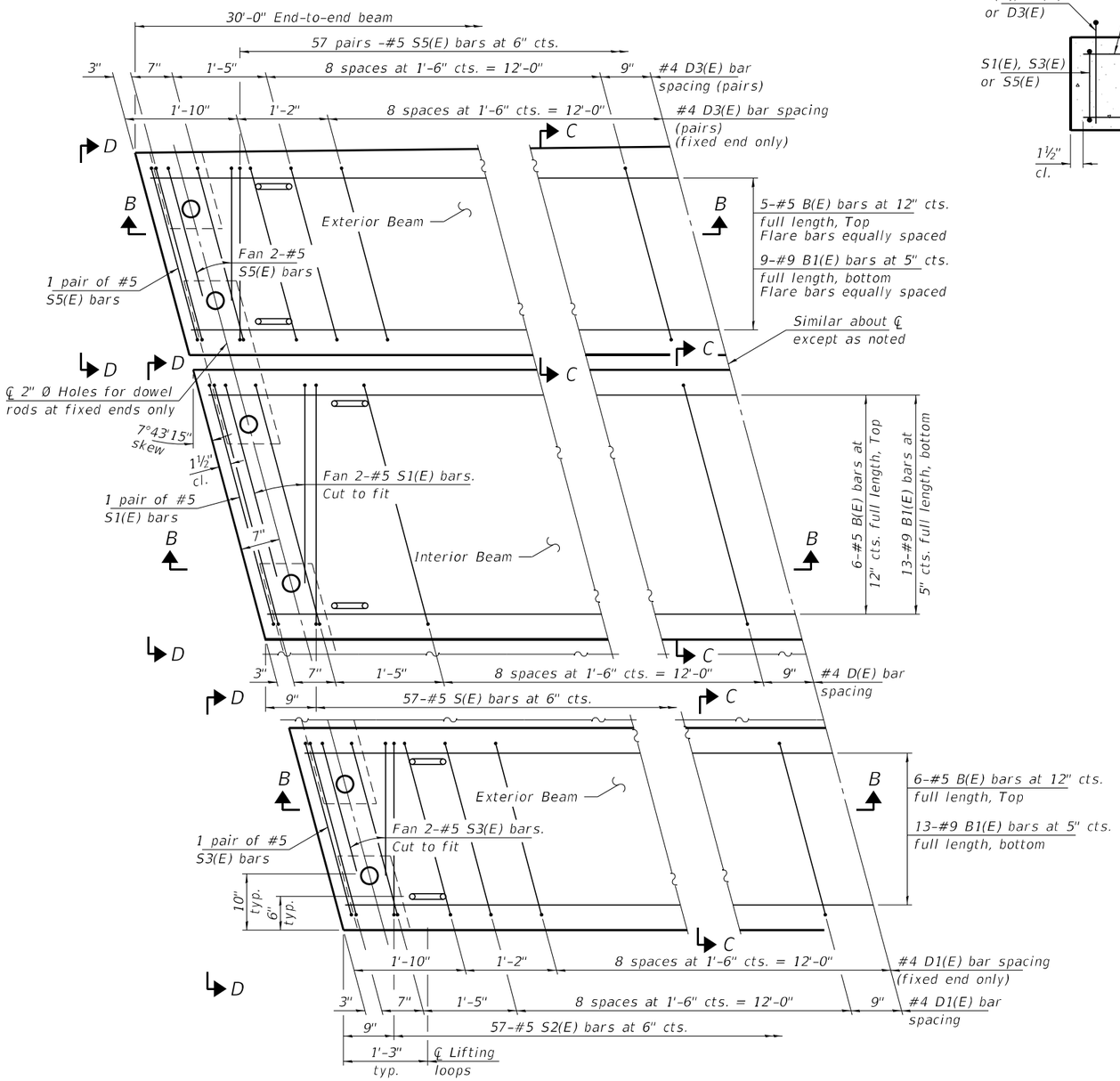

PLAN VIEW

(showing precast bridge approach beams)
(Spacing of D(E), D1(E) and D3(E) bars may be adjusted up to 3" to miss the dowel rod holes and the lifting loops at the beam ends)

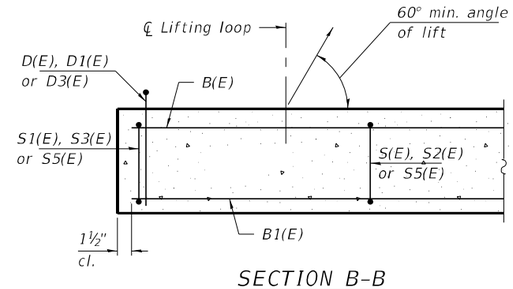

SECTION B-B

Notes:

The precast bridge approach slab shall be according to Section 504 of the Standard Specifications and shall be paid for at the contract unit price per square foot for Precast Bridge Approach Slab.

Cast-in-place substitution of Precast Bridge Approach Slab is not allowed.

The top surface of precast bridge approach slabs shall be finished similar to precast prestressed deck beams with concrete wearing surface as specified in the IDOT "Manual for Fabrication of Precast Prestressed Concrete Products."

Two ⅛" fabric adjusting shims of the dimensions of the exterior bearing pad shall be provided for each bearing pad location. Cost included with Precast Bridge Approach Slab.

A minimum 2 ½" Ø lifting pins shall be used to engage the lifting loops during handling.

Compressive strength of precast concrete, f'c shall be 6,000 psi.

Compressive strength of precast concrete during initial lifting, f'ci shall be 5,000 psi.

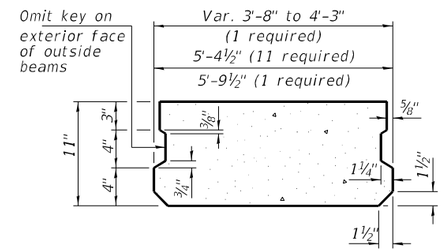

SECTION C-C

(Showing dimensions)

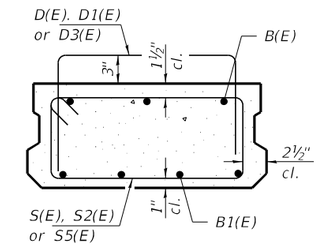

SECTION C-C

(Showing reinforcement)

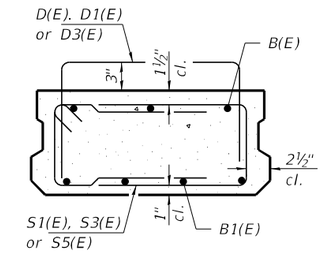

SECTION D-D

(Showing reinforcement)

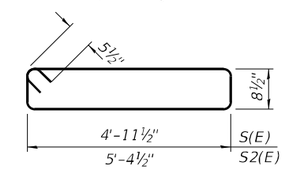

BARS S(E) & S2(E)

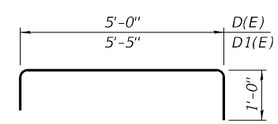

BARS D(E) & D1(E)

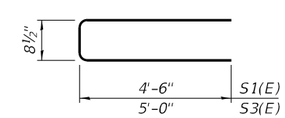

BARS S1(E) & S3(E)

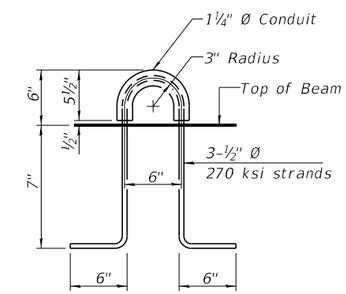

LIFTING LOOP DETAIL

(An alternate lifting loop with a proof load of 25,000 lbs. and utilized according to the manufacturer's recommendations may be used)

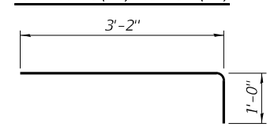

BAR D3(E)

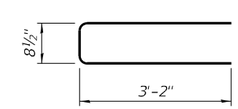

BAR S5(E)

BAR LIST
11" X 3'-8" TO 4'-3" EXTERIOR BEAM

(For information only)

Bar	No.	Size	Length	Shape
B(E)	5	#5	29'-8"	—
B1(E)	9	#9	29'-8"	—
D3(E)	64	#4	4'-2"	⌐
S5(E)	122	#5	7'-1"	⊏

BAR LIST
11" X 5'-4½" INTERIOR BEAM

(For information only)

Bar	No.	Size	Length	Shape
B(E)	6	#5	29'-8"	—
B1(E)	13	#9	29'-8"	—
D(E)	22	#4	7'-0"	⊓
S(E)	57	#5	12'-3"	⊏
S1(E)	8	#5	9'-9"	⊏

BAR LIST
11" X 5'-9½" EXTERIOR BEAM

(For information only)

Bar	No.	Size	Length	Shape
B(E)	6	#5	29'-8"	—
B1(E)	13	#9	29'-8"	—
D1(E)	32	#4	7'-5"	⊓
S2(E)	57	#5	13'-1"	⊏
S3(E)	8	#5	10'-9"	⊏

(Sheet 3 of 4)

F.A.I.	SECTION	COUNTY	TOTAL SHEETS	SHEET NO.
72	(58-63HVB)BR	MACON	122	79

CONTRACT NO. 74705

ILLINOIS | FED. AID PROJECT

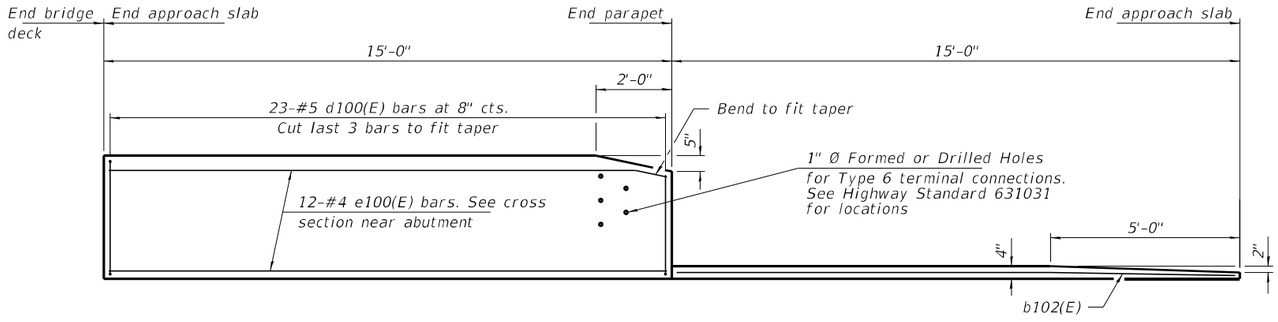

INSIDE ELEVATION OF PARAPET AND CURB

Notes:

The joint opening shall be adjusted for temperature per Article 520.04 of the Standard Specifications. However, since this detail is for jointless structures, the length of bridge used to calculate the adjustment shall be equal to half the total bridge length plus the length of the bridge approach slab.

After precast bridge approach slabs have been erected, holes shall be drilled into abutment and anchor dowels placed. Dowel holes shall be filled with non-shrink grout to top of precast slab and cured according to Article 1020.13(a)(3) or 1020.13(a)(5) of the Standard Specifications for a minimum of 24 hours before casting the shear keys and wearing surface.

Any concrete poured monolithically with the wearing surface, such as curbs, shall not be paid for separately, but will be included in the cost of Concrete Wearing Surface, 5".

The strip seal shall extend 6" beyond the edge of the approach slab on each end.

Parapet concrete shall be paid for as Concrete Superstructure.

Approach footing concrete shall be paid for as Concrete Structures.

The approach footing maximum applied service bearing pressure (Qmax) = 2.0 ksf.

Cost of excavation for approach footing included with Concrete Structures.

For Granular Backfill for Structures and drainage treatment details, see sheet 2 of 70.

Cost of cellular polystyrene is included with Concrete Superstructure.

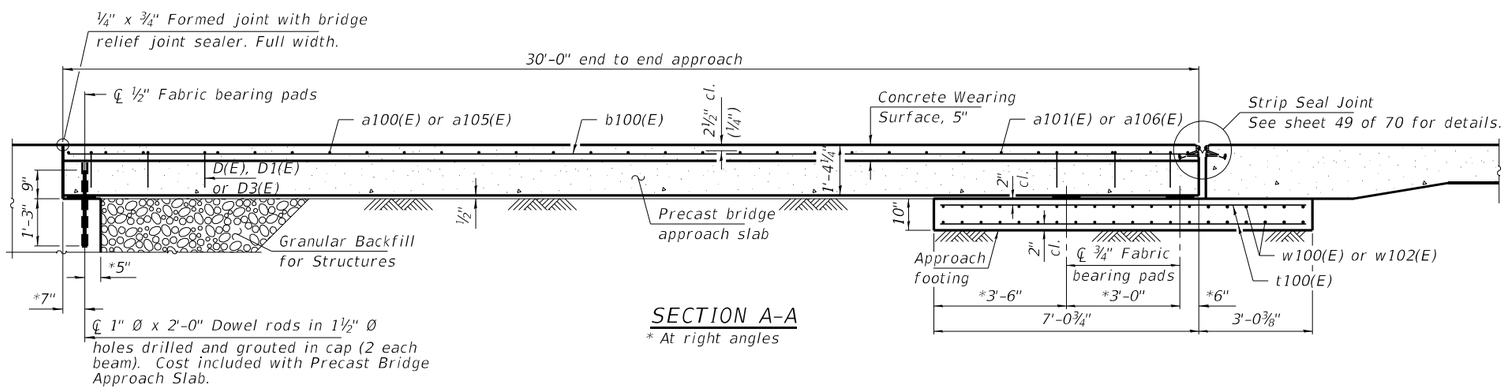

SECTION A-A

* At right angles

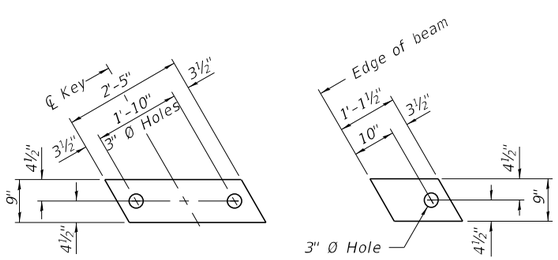

FABRIC BEARING PAD

Notes:

Bearing pads at fixed end shall be ½" thick and bearing pads at expansion end shall be ¾" thick.

Omit holes for fabric bearing pads at approach slab footing end of beams.

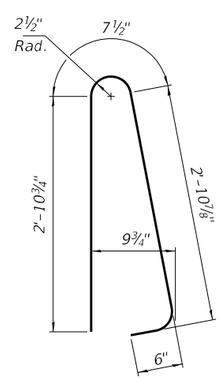

BAR d100(E)

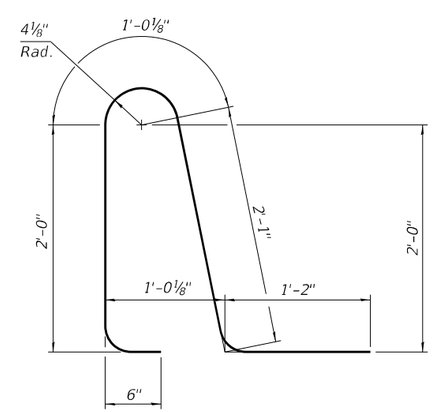

BAR d101(E)

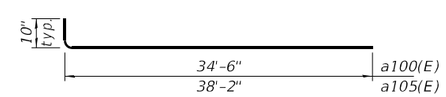

BAR a100(E) or a105(E)

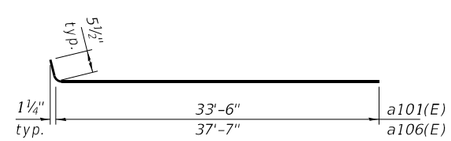

BAR a101(E) or a106(E)

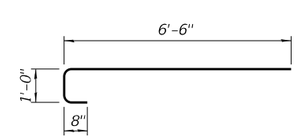

BAR a104(E)

NORTH APPROACH (W.B.)
BILL OF MATERIAL

Bar	No.	Size	Length	Shape
a100(E)	16	#5	35'-4"	
a101(E)	15	#4	34'-0"	
a104(E)	32	#5	8'-2"	
a105(E)	16	#5	39'-0"	
a106(E)	15	#4	38'-1"	
b100(E)	72	#4	29'-8"	
b101(E)	8	#5	14'-8"	
b102(E)	2	#4	14'-7"	
d100(E)	46	#5	7'-0"	
d101(E)	46	#5	6'-10"	
e100(E)	24	#4	14'-8"	
t100(E)	144	#4	9'-9"	
w100(E)	40	#5	33'-7"	
w102(E)	40	#5	37'-7"	
Concrete Structures			Cu. Yd.	22.1
Concrete Superstructure			Cu. Yd.	4.2
Reinforcement Bars, Epoxy Coated			Pound	8,610
Protective Coat			Sq. Yd.	250
Bridge Deck Grooving (Longitudinal)			Sq. Yd.	179
Concrete Wearing Surface, 5"			Sq. Yd.	239
Precast Bridge Approach Slab			Sq. Ft.	2,066
Diamond Grinding (Bridge Section)			Sq. Yd.	219

(Sheet 4 of 4)

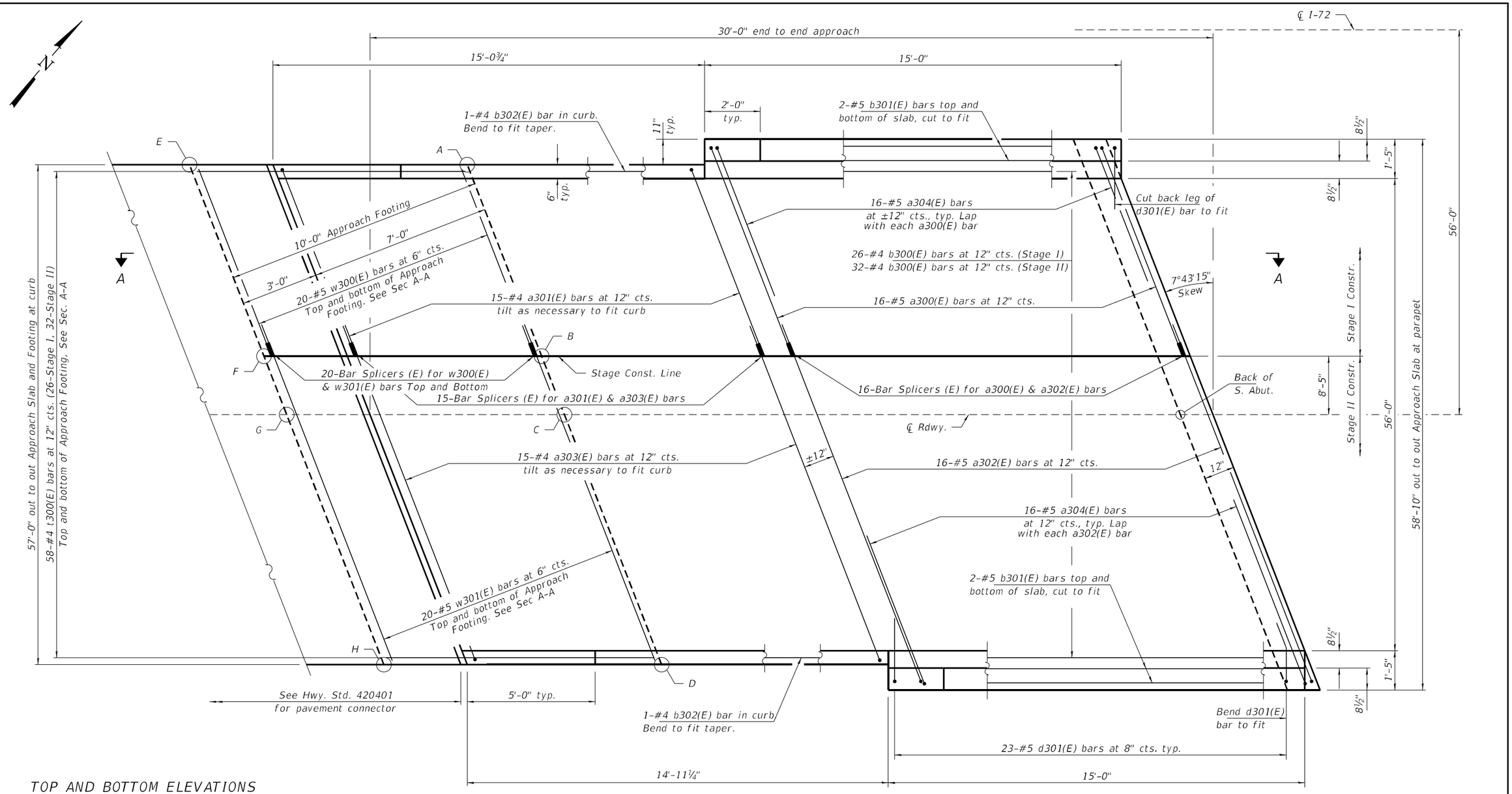

PLAN - SOUTH APPROACH SLAB

TOP AND BOTTOM ELEVATIONS FOR APPROACH FOOTING

South Approach (E.B.)				
Point/ Location	Station	Offset	Top	Bottom
A - NW	722+55.29	-34.50	711.31	710.47
B - N. SCL	722+58.82	-8.42	711.82	710.99
C - N. CL	722+59.96	0.00	711.95	711.12
D - NE	722+63.01	22.50	711.57	710.73
E - SW	722+45.19	-34.50	711.27	710.44
F - S. SCL	722+48.73	-8.42	711.79	710.96
G - S. CL	722+49.87	0.00	711.92	711.09
H - SE	722+52.92	22.50	711.54	710.71

Notes: See Sec. A-A on sheet 44 of 70.

For cross section of approach slab, see sheet 42 of 70.

(Sheet 1 of 4)

FILE NAME = 190501-sht-bridge.dgn	USER NAME = rhosick	DESIGNED - S.M.S.	REVISED -	STATE OF ILLINOIS DEPARTMENT OF TRANSPORTATION	PRECAST BRIDGE APPROACH SLAB (S. APPR.) (E.B.) SN 058-0139(E.B.) & 058-0140(W.B.)	F.A.I.	SECTION	COUNTY	TOTAL SHEETS / SHEET NO.
HAMPTON, LENZINI AND RENWICK, INC. 3305 STEVENSON DRIVE, SUITE 201 SPRINGFIELD, ILLINOIS 62703 ILLINOIS PROFESSIONAL DESIGN FIRM LS / PC / SE CORP. 184.000959		CHECKED - S.W.M.	REVISED -			72	(58-63HVB)BR	MACON	122 / 81
	PLOT SCALE =	DRAWN - R.D.H.	REVISED -					CONTRACT NO. 74705	
	PLOT DATE = 8/21/2025	CHECKED - S.M.S.	REVISED -		SHEET NO. 41 OF 70 SHEETS		ILLINOIS	FED. AID PROJECT	

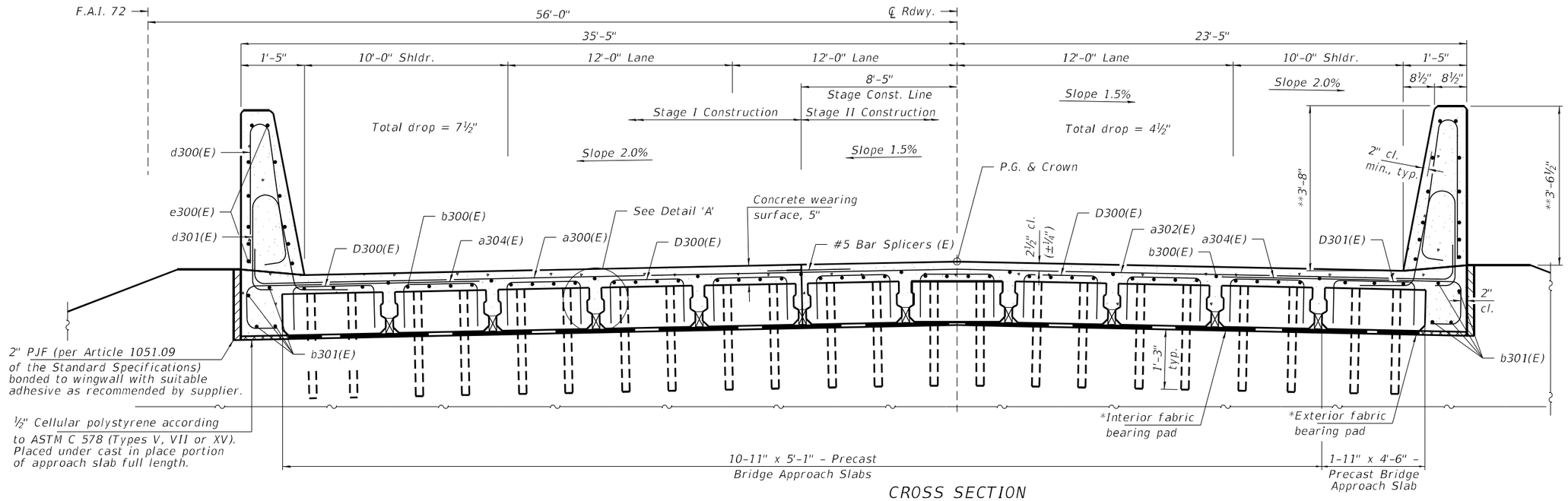

CROSS SECTION

Near Abutment
(Looking North)

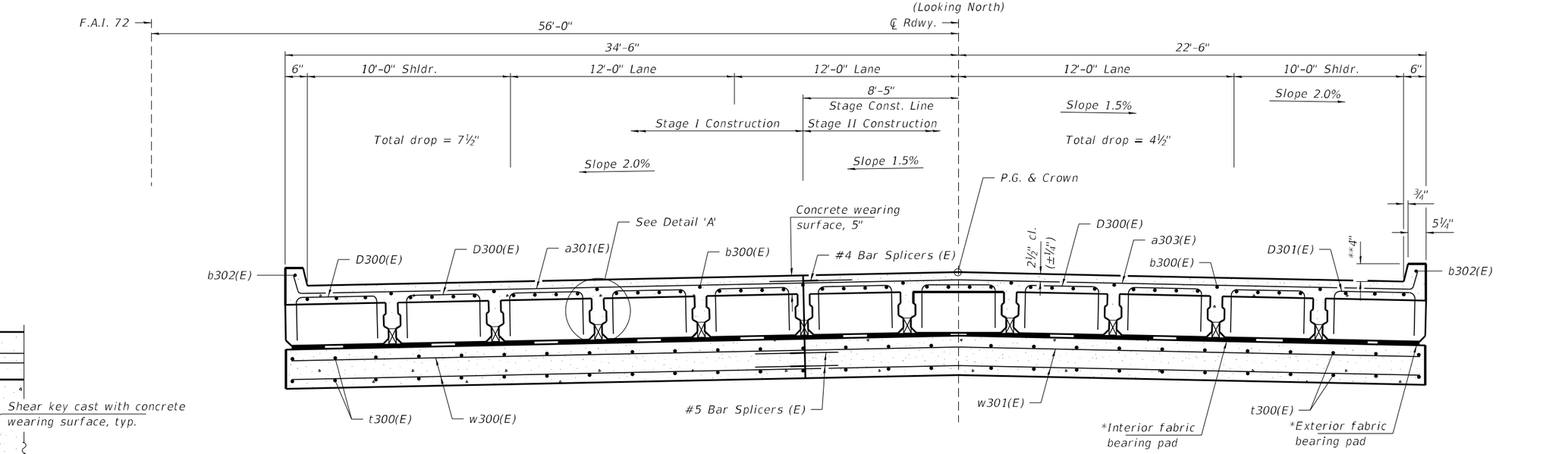

CROSS SECTION

at approach footing
(Looking North)

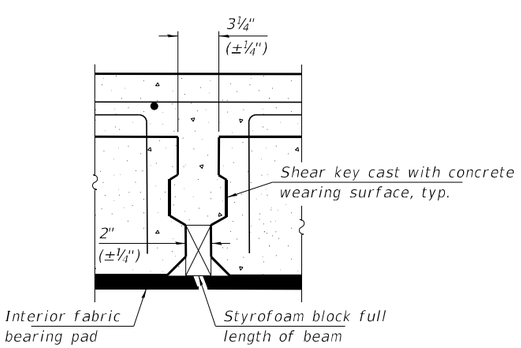

DETAIL 'A'

* Fabric bearing pads at the expansion end shall be recessed ¼" into the approach footing and bonded. Adjusting shims, when required, shall be bonded to the top of the fabric bearing pads.

** After Grinding

(Sheet 2 of 4)

FILE NAME = 190501-sht-bridge.dgn	USER NAME = rhosick	DESIGNED - S.M.S.	REVISED -	STATE OF ILLINOIS DEPARTMENT OF TRANSPORTATION	PRECAST BRIDGE APPROACH SLAB (S. APPR.) (E.B.) SN 058-0139(E.B.) & 058-0140(W.B.)	F.A.I.	SECTION	COUNTY	TOTAL SHEETS / SHEET NO.
HAMPTON, LENZINI AND RENWICK, INC. 3345 STEVENSON DRIVE, SUITE 201 SPRINGFIELD, ILLINOIS 62703		CHECKED - S.W.M.	REVISED -			72	(58-63HVB)BR	MACON	122 / 82
ILLINOIS PROFESSIONAL DESIGN FIRM LS / PE / SE CORP. 184-000959	PLOT SCALE =	DRAWN - R.D.H.	REVISED -					CONTRACT NO. 74705	
	PLOT DATE = 8/21/2025	CHECKED - S.M.S.	REVISED -		SHEET NO. 42 OF 70 SHEETS		ILLINOIS	FED. AID PROJECT	

Notes:

The precast bridge approach slab shall be according to Section 504 of the Standard Specifications and shall be paid for at the contract unit price per square foot for Precast Bridge Approach Slab.

Cast-in-place substitution of Precast Bridge Approach Slab is not allowed.

The top surface of precast bridge approach slabs shall be finished similar to precast prestressed deck beams with concrete wearing surface as specified in the IDOT "Manual for Fabrication of Precast Prestressed Concrete Products."

Two ⅛" fabric adjusting shims of the dimensions of the exterior bearing pad shall be provided for each bearing pad location. Cost included with Precast Bridge Approach Slab.

A minimum 2 ½" Ø lifting pins shall be used to engage the lifting loops during handling.

Compressive strength of precast concrete, f'c shall be 6,000 psi.

Compressive strength of precast concrete during initial lifting, f'ci shall be 5,000 psi.

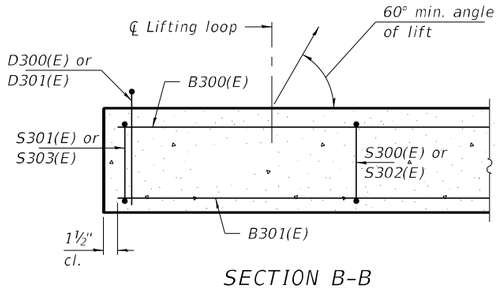

SECTION B-B

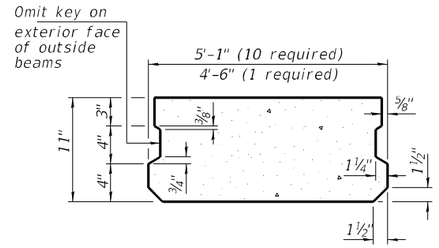

SECTION C-C
(Showing dimensions)

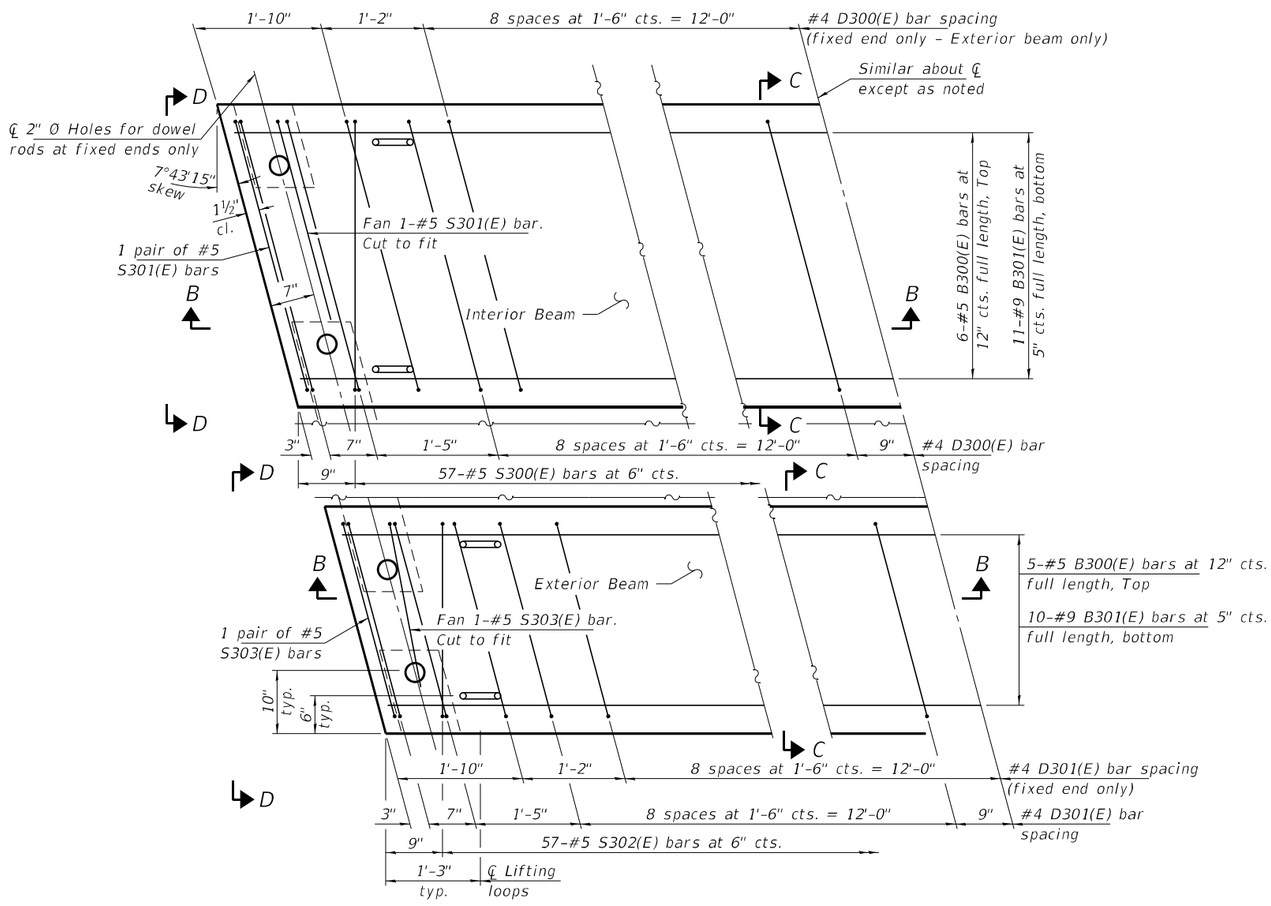

PLAN VIEW
(showing precast bridge approach beams)
(Spacing of D300(E) and D301(E) bars may be adjusted up to 3" to miss the dowel rod holes and the lifting loops at the beam ends)

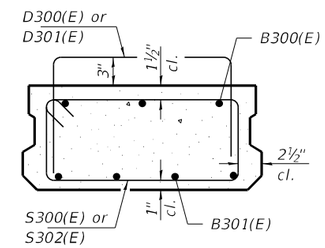

SECTION C-C
(Showing reinforcement)

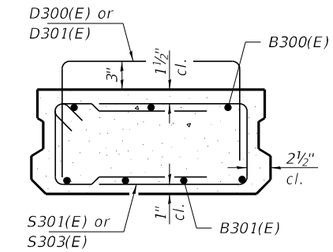

SECTION D-D
(Showing reinforcement)

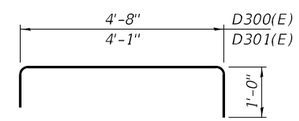

BARS D300(E) & D301(E)

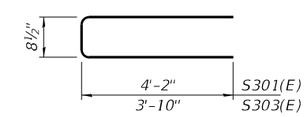

BARS S301(E) & S303(E)

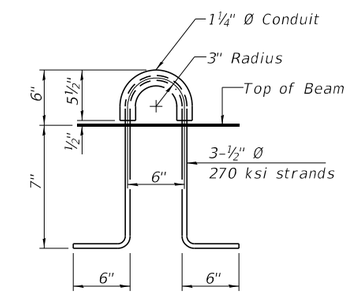

LIFTING LOOP DETAIL
(An alternate lifting loop with a proof load of 25,000 lbs. and utilized according to the manufacturer's recommendations may be used)

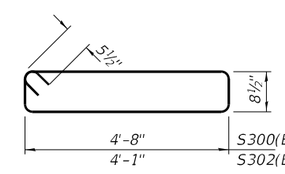

BARS S300(E) & S302(E)

BAR LIST
11" X 5'-1" EXTERIOR BEAM
(For information only)

Bar	No.	Size	Length	Shape
B300(E)	6	#5	29'-8"	—
B301(E)	11	#9	29'-8"	—
D300(E)	32	#4	6'-8"	⊓
S300(E)	57	#5	11'-8"	⊏
S301(E)	6	#5	9'-1"	⊏

BAR LIST
11" X 5'-1" INTERIOR BEAM
(For information only)

Bar	No.	Size	Length	Shape
B300(E)	6	#5	29'-8"	—
B301(E)	11	#9	29'-8"	—
D300(E)	22	#4	6'-8"	⊓
S300(E)	57	#5	11'-8"	⊏
S301(E)	6	#5	9'-1"	⊏

BAR LIST
11" X 4'-6" EXTERIOR BEAM
(For information only)

Bar	No.	Size	Length	Shape
B300(E)	5	#5	29'-8"	—
B301(E)	10	#9	29'-8"	—
D301(E)	32	#4	6'-1"	⊓
S302(E)	57	#5	10'-6"	⊏
S303(E)	6	#5	8'-5"	⊏

(Sheet 3 of 4)

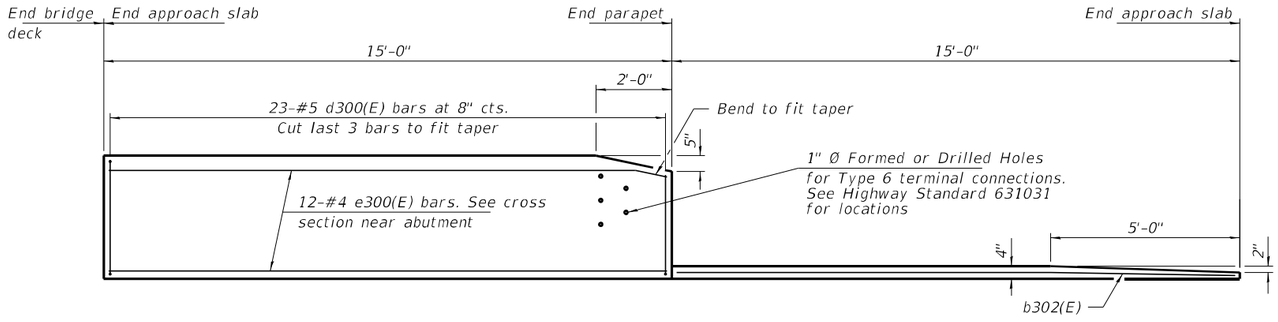

INSIDE ELEVATION OF PARAPET AND CURB

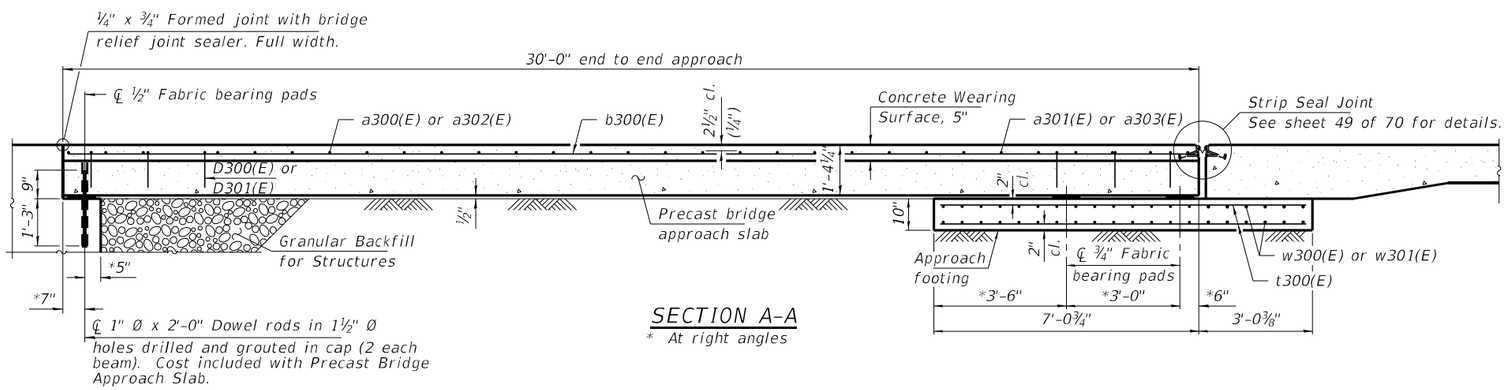

SECTION A-A

* At right angles

Notes:

The joint opening shall be adjusted for temperature per Article 520.04 of the Standard Specifications. However, since this detail is for jointless structures, the length of bridge used to calculate the adjustment shall be equal to half the total bridge length plus the length of the bridge approach slab.

After precast bridge approach slabs have been erected, holes shall be drilled into abutment and anchor dowels placed. Dowel holes shall be filled with non-shrink grout to top of precast slab and cured according to Article 1020.13(a)(3) or 1020.13(a)(5) of the Standard Specifications for a minimum of 24 hours before casting the shear keys and wearing surface.

Any concrete poured monolithically with the wearing surface, such as curbs, shall not be paid for separately, but will be included in the cost of Concrete Wearing Surface, 5".

The strip seal shall extend 6" beyond the edge of the approach slab on each end.

Parapet concrete shall be paid for as Concrete Superstructure.

Approach footing concrete shall be paid for as Concrete Structures.

The approach footing maximum applied service bearing pressure (Qmax) = 2.0 ksf.

Cost of excavation for approach footing included with Concrete Structures.

For Granular Backfill for Structures and drainage treatment details, see sheet 2 of 70.

Cost of cellular polystyrene is included with Concrete Superstructure.

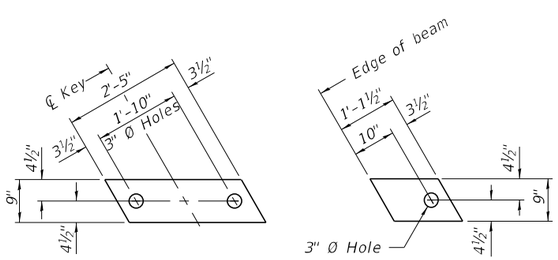

FABRIC BEARING PAD

Notes:

Bearing pads at fixed end shall be ½" thick and bearing pads at expansion end shall be ¾" thick.

Omit holes for fabric bearing pads at approach slab footing end of beams.

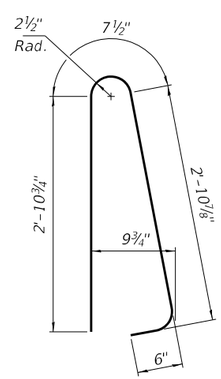

BAR d300(E)

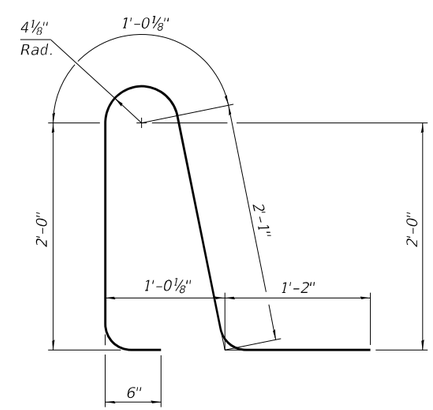

BAR d301(E)

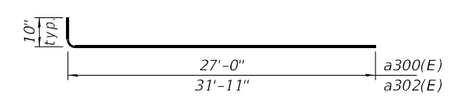

BAR a300(E) or a302(E)

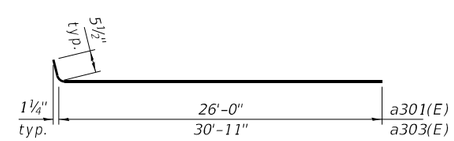

BAR a301(E) or a303(E)

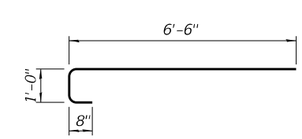

BAR a304(E)

SOUTH APPROACH (E.B.)
BILL OF MATERIAL

Bar	No.	Size	Length	Shape
a300(E)	16	#5	27'-10"	
a301(E)	15	#4	26'-6"	
a302(E)	16	#5	32'-9"	
a303(E)	15	#4	31'-5"	
a304(E)	32	#5	8'-2"	
b300(E)	58	#4	29'-8"	
b301(E)	8	#5	14'-8"	
b302(E)	2	#4	14'-7"	
d300(E)	46	#5	7'-0"	
d301(E)	46	#5	6'-10"	
e300(E)	24	#4	14'-8"	
t300(E)	116	#4	9'-9"	
w300(E)	40	#5	26'-1"	
w301(E)	40	#5	31'-0"	
Concrete Structures			Cu. Yd.	17.8
Concrete Superstructure			Cu. Yd.	4.2
Reinforcement Bars, Epoxy Coated			Pound	7,190
Protective Coat			Sq. Yd.	204
Bridge Deck Grooving (Longtudinal)			Sq. Yd.	120
Concrete Wearing Surface, 5"			Sq. Yd.	193
Precast Bridge Approach Slab			Sq. Ft.	1,660
Diamond Grinding (Bridge Section)			Sq. Yd.	173

(Sheet 4 of 4)

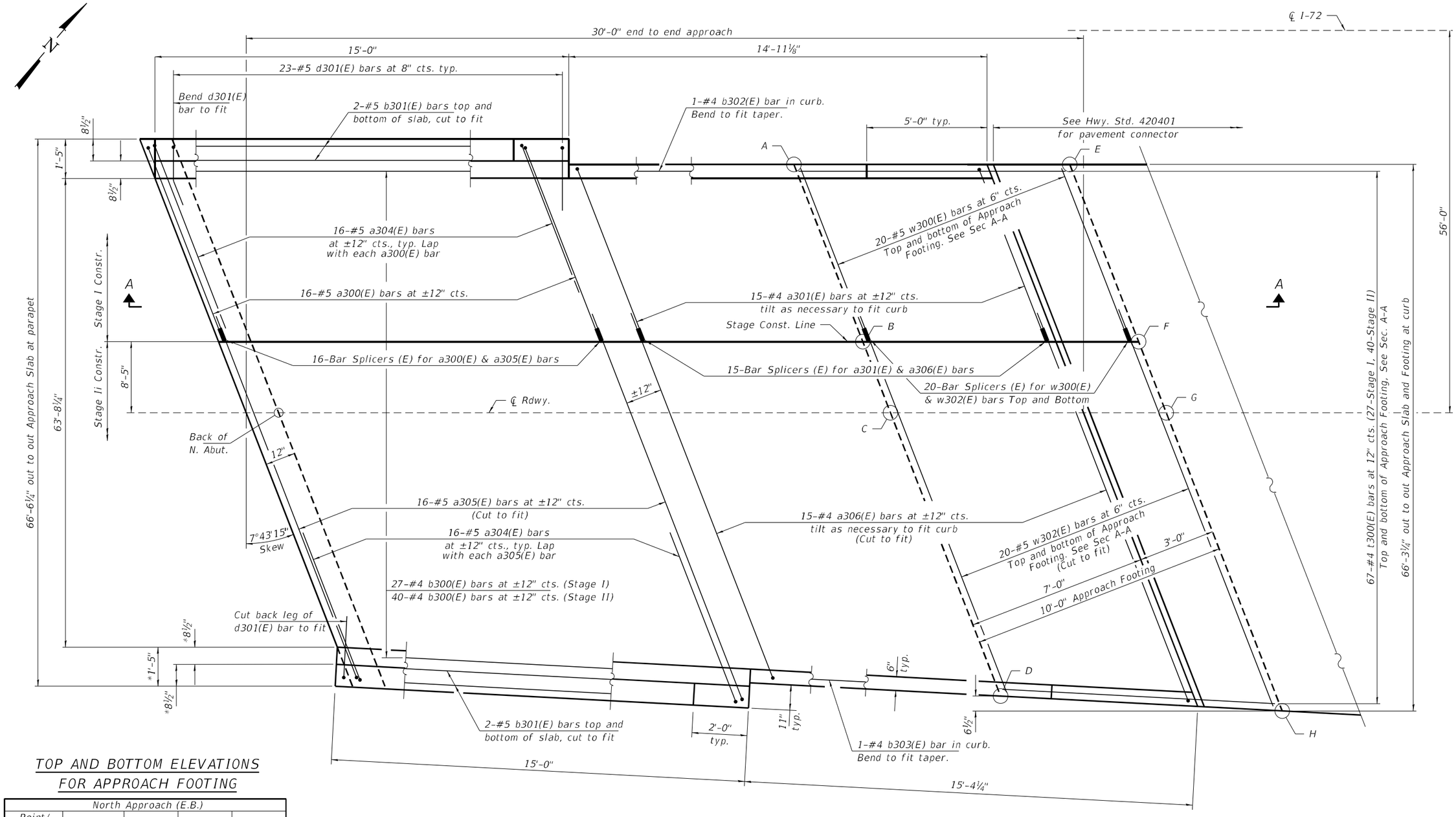

TOP AND BOTTOM ELEVATIONS FOR APPROACH FOOTING

North Approach (E.B.)				
Point/ Location	Station	Offset	Top	Bottom
A - SW	725+67.09	-34.50	710.45	709.61
B - S. SCL	725+70.63	-8.42	710.92	710.09
C - S. CL	725+71.77	0.00	711.04	710.20
D - SE	725+76.03	31.41	710.43	709.60
E - NW	725+77.18	-34.50	710.36	709.53
F - N. SCL	725+80.72	-8.42	710.83	710.00
G - N. CL	725+81.86	0.00	710.95	710.11
H - NE	725+86.19	31.95	710.33	709.50

* Measured perpendicular to the edge of deck.

PLAN - NORTH APPROACH SLAB

See Sec. A-A on sheet 48 of 70.

For cross section of approach slab, see sheet 46 of 70.

(Sheet 1 of 4)

FILE NAME = 190501-sht-bridge.dgn	USER NAME = rhosick	DESIGNED - S.M.S.	REVISED -	STATE OF ILLINOIS DEPARTMENT OF TRANSPORTATION	PRECAST BRIDGE APPROACH SLAB (N. APPR.) (E.B.) SN 058-0139(E.B.) & 058-0140(W.B.)
HAMPTON, LENZINI AND RENWICK, INC. 3085 STEVENSON DRIVE, SUITE 201 SPRINGFIELD, ILLINOIS 62703		CHECKED - S.W.M.	REVISED -		
ILLINOIS PROFESSIONAL DESIGN FIRM LS / PE / SE CORP. 184.000959	PLOT SCALE =	DRAWN - R.D.H.	REVISED -		
	PLOT DATE = 8/21/2025	CHECKED - S.M.S.	REVISED -		SHEET NO. 45 OF 70 SHEETS

F.A.I.	SECTION	COUNTY	TOTAL SHEETS	SHEET NO.
72	(58-63HVB)BR	MACON	122	85
		CONTRACT NO. 74705		
		ILLINOIS	FED. AID PROJECT	

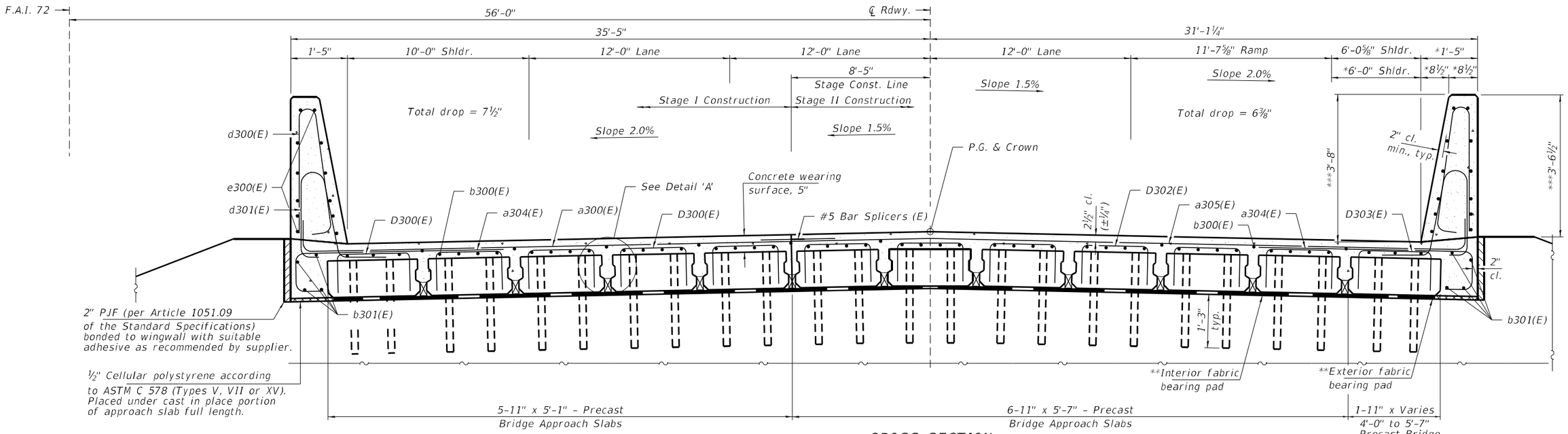

CROSS SECTION

Near Abutment
(Looking North)

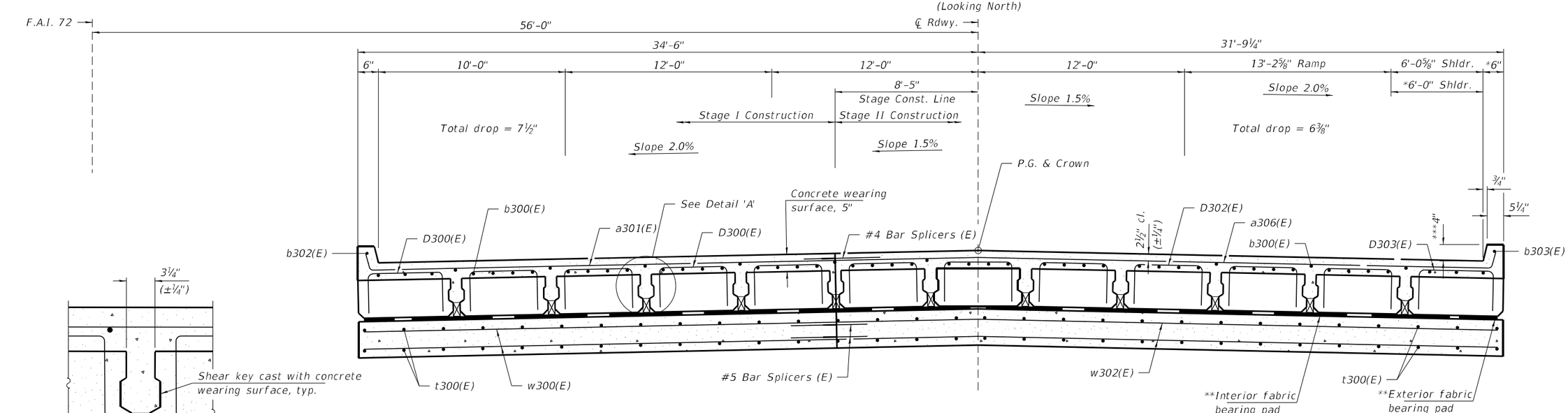

CROSS SECTION

at approach footing
(Looking North)

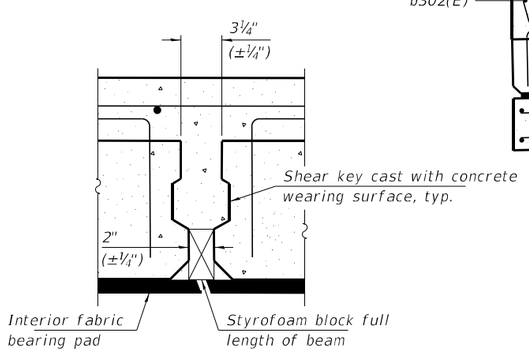

DETAIL 'A'

* Measured perpendicular to the edge of deck.

** Fabric bearing pads at the expansion end shall be recessed ¼" into the approach footing and bonded. Adjusting shims, when required, shall be bonded to the top of the fabric bearing pads.

*** After Grinding

(Sheet 2 of 4)

FILE NAME = 190501-sht-bridge.dgn	USER NAME = rhosick	DESIGNED - S.M.S.	REVISED -	STATE OF ILLINOIS DEPARTMENT OF TRANSPORTATION	PRECAST BRIDGE APPROACH SLAB (N. APPR.) (E.B.) SN 058-0139(E.B.) & 058-0140(W.B.)	F.A.I.	SECTION	COUNTY	TOTAL SHEETS / SHEET NO.
HAMPTON, LENZINI AND RENWICK, INC. 3345 STEVENSON DRIVE, SUITE 201 SPRINGFIELD, ILLINOIS 62703		CHECKED - S.W.M.	REVISED -			72	(58-63HVB)BR	MACON	122 / 86
	PLOT SCALE =	DRAWN - R.D.H.	REVISED -					CONTRACT NO. 74705	
ILLINOIS PROFESSIONAL DESIGN FIRM LS / PE / SE CORP. 184-000959	PLOT DATE = 8/21/2025	CHECKED - S.M.S.	REVISED -		SHEET NO. 46 OF 70 SHEETS			ILLINOIS FED. AID PROJECT	

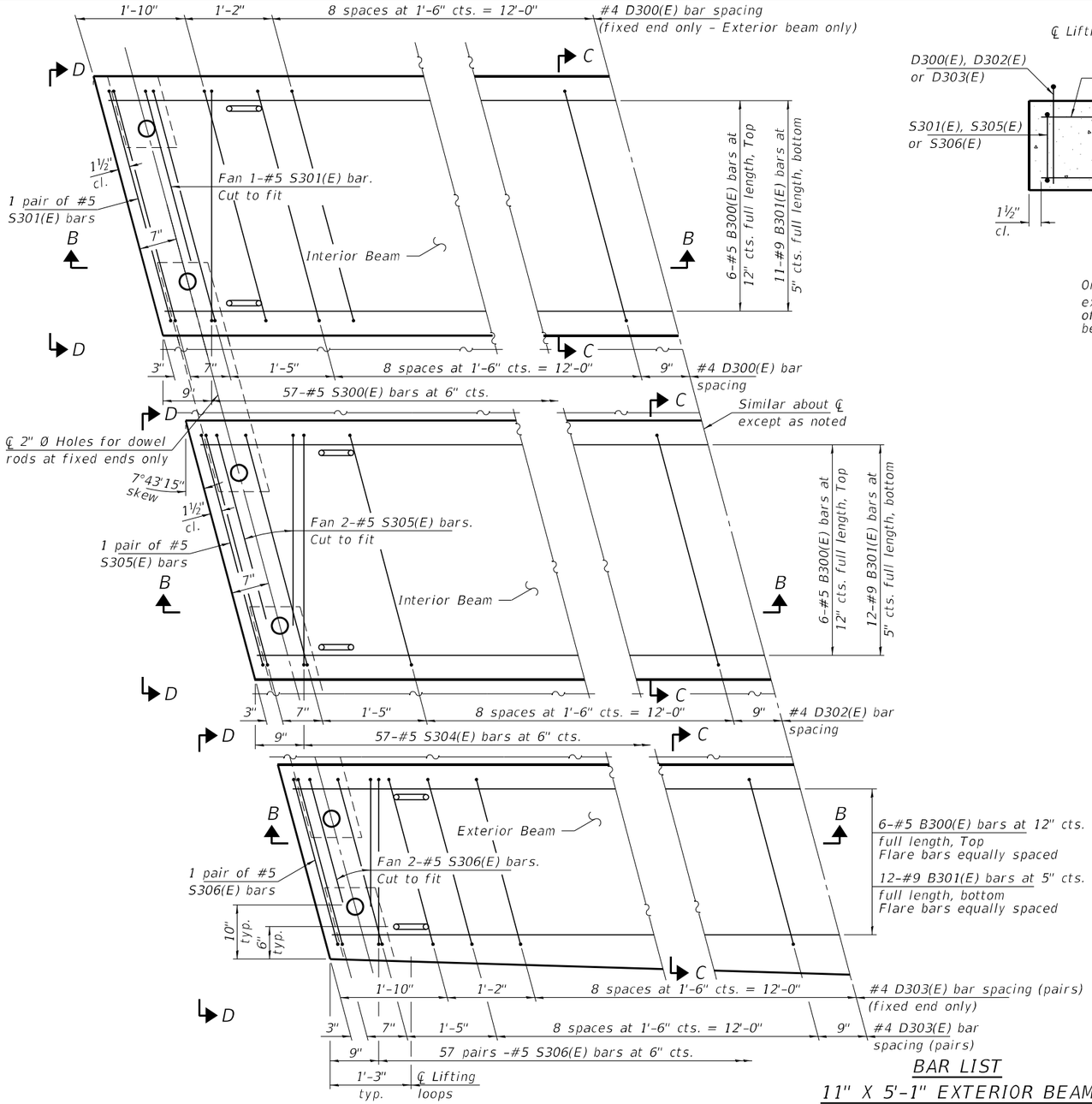

PLAN VIEW

(showing precast bridge approach beams)
(Spacing of D300(E), D302(E) and D303(E) bars may be adjusted up to 3" to miss the dowel rod holes and the lifting loops at the beam ends)

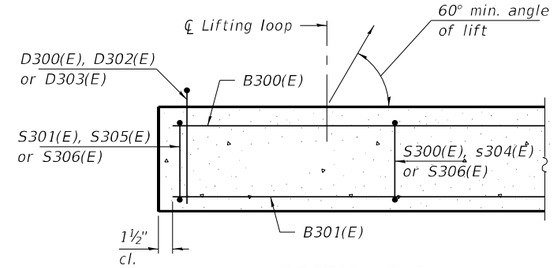

SECTION B-B

Notes:

The precast bridge approach slab shall be according to Section 504 of the Standard Specifications and shall be paid for at the contract unit price per square foot for Precast Bridge Approach Slab.

Cast-in-place substitution of Precast Bridge Approach Slab is not allowed.

The top surface of precast bridge approach slabs shall be finished similar to precast prestressed deck beams with concrete wearing surface as specified in the IDOT "Manual for Fabrication of Precast Prestressed Concrete Products."

Two ⅛" fabric adjusting shims of the dimensions of the exterior bearing pad shall be provided for each bearing pad location. Cost included with Precast Bridge Approach Slab.

A minimum 2 ½" Ø lifting pins shall be used to engage the lifting loops during handling.

Compressive strength of precast concrete, f'c shall be 6,000 psi.

Compressive strength of precast concrete during initial lifting, f'ci shall be 5,000 psi.

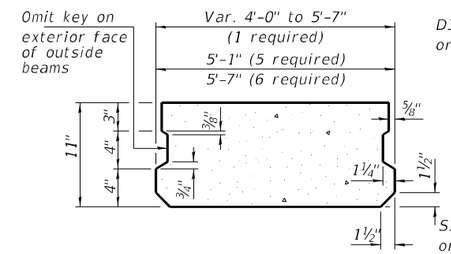

SECTION C-C
(Showing dimensions)

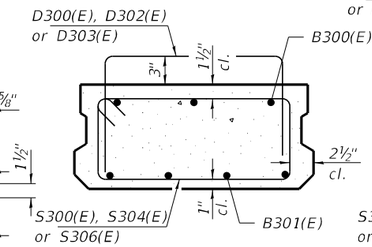

SECTION C-C
(Showing reinforcement)

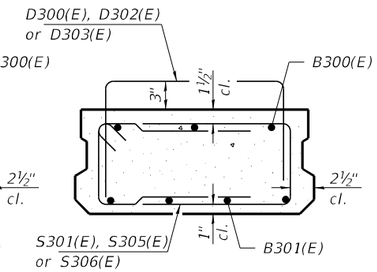

SECTION D-D
(Showing reinforcement)

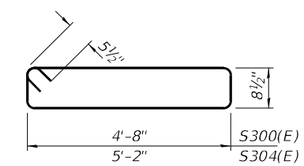

BARS S300(E) & S304(E)

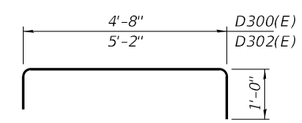

BARS D300(E) & D302(E)

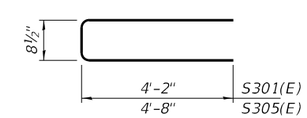

BARS S301(E) & S305(E)

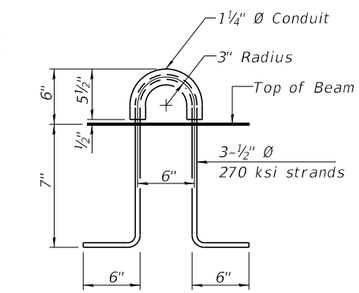

LIFTING LOOP DETAIL

(An alternate lifting loop with a proof load of 25,000 lbs. and utilized according to the manufacturer's recommendations may be used)

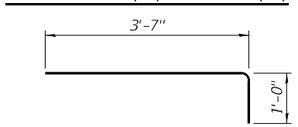

BAR D303(E)

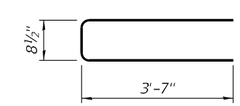

BAR S306(E)

BAR LIST
11" X 5'-1" EXTERIOR BEAM
(For information only)

Bar	No.	Size	Length	Shape
B300(E)	6	#5	29'-8"	—
B301(E)	11	#9	29'-8"	—
D300(E)	32	#4	6'-8"	⊓
S300(E)	57	#5	11'-8"	⊓
S301(E)	6	#5	9'-1"	⊏

BAR LIST
11" X 5'-1" INTERIOR BEAM
(For information only)

Bar	No.	Size	Length	Shape
B300(E)	6	#5	29'-8"	—
B301(E)	11	#9	29'-8"	—
D300(E)	22	#4	6'-8"	⊓
S300(E)	57	#5	11'-8"	⊓
S301(E)	6	#5	9'-1"	⊏

BAR LIST
11" X 5'-7" INTERIOR BEAM
(For information only)

Bar	No.	Size	Length	Shape
B300(E)	6	#5	29'-8"	—
B301(E)	12	#9	29'-8"	—
D302(E)	22	#4	7'-2"	⊓
S304(E)	57	#5	12'-8"	⊓
S305(E)	8	#5	10'-1"	⊏

BAR LIST
11" X 4'-0" TO 5'-7" EXTERIOR BEAM
(For information only)

Bar	No.	Size	Length	Shape
B300(E)	6	#5	29'-8"	—
B301(E)	12	#9	29'-8"	—
D303(E)	64	#4	4'-7"	⊓
S306(E)	122	#5	7'-11"	⊏

(Sheet 3 of 4)

F.A.I.	SECTION	COUNTY	TOTAL SHEETS	SHEET NO.
72	(58-63HVB)BR	MACON	122	87

CONTRACT NO. 74705

ILLINOIS FED. AID PROJECT

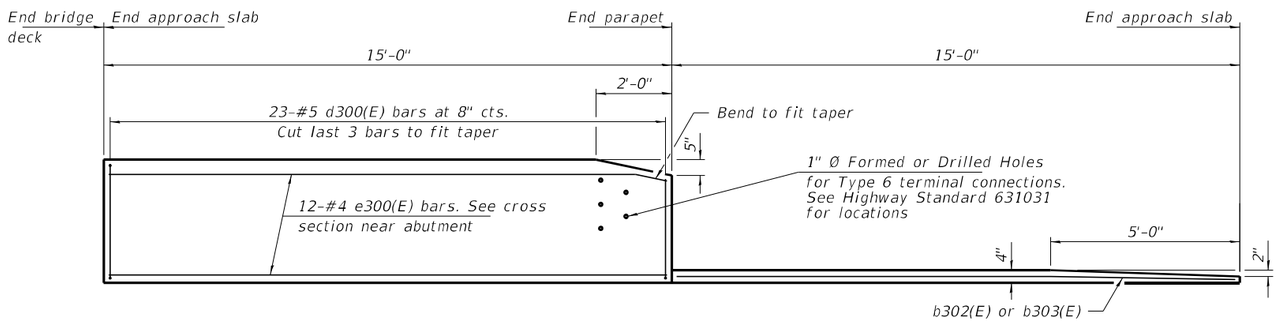

INSIDE ELEVATION OF PARAPET AND CURB

Notes:

The joint opening shall be adjusted for temperature per Article 520.04 of the Standard Specifications. However, since this detail is for jointless structures, the length of bridge used to calculate the adjustment shall be equal to half the total bridge length plus the length of the bridge approach slab.

After precast bridge approach slabs have been erected, holes shall be drilled into abutment and anchor dowels placed. Dowel holes shall be filled with non-shrink grout to top of precast slab and cured according to Article 1020.13(a)(3) or 1020.13(a)(5) of the Standard Specifications for a minimum of 24 hours before casting the shear keys and wearing surface.

Any concrete poured monolithically with the wearing surface, such as curbs, shall not be paid for separately, but will be included in the cost of Concrete Wearing Surface, 5".

The strip seal shall extend 6" beyond the edge of the approach slab on each end.

Parapet concrete shall be paid for as Concrete Superstructure.

Approach footing concrete shall be paid for as Concrete Structures.

The approach footing maximum applied service bearing pressure (Qmax) = 2.0 ksf.

Cost of excavation for approach footing included with Concrete Structures.

For Granular Backfill for Structures and drainage treatment details, see sheet 2 of 70.

Cost of cellular polystyrene is included with Concrete Superstructure.

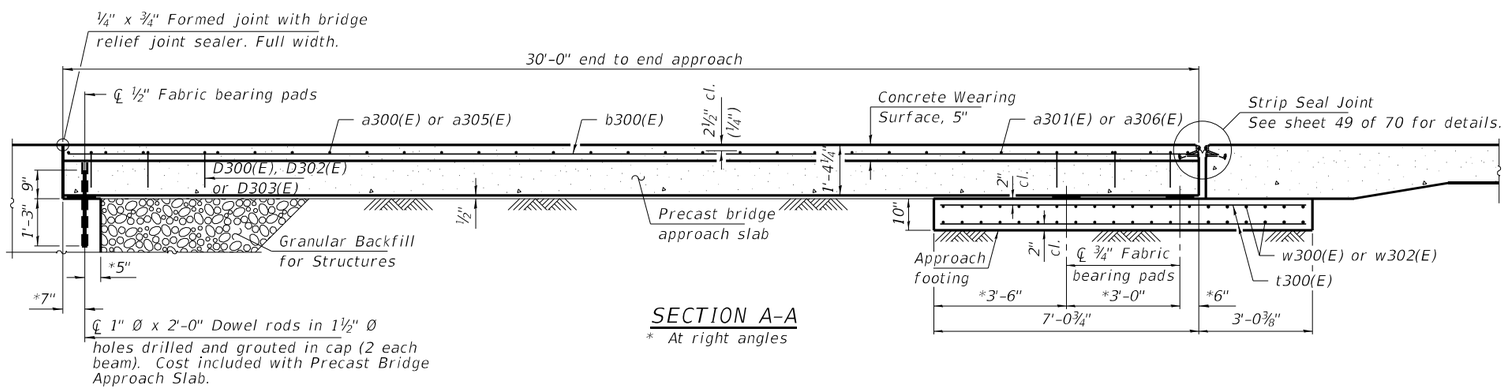

SECTION A-A

* At right angles

NORTH APPROACH (E.B.)
BILL OF MATERIAL

Bar	No.	Size	Length	Shape
a300(E)	16	#5	27'-10"	
a301(E)	15	#4	26'-6"	
a304(E)	32	#5	8'-2"	
a305(E)	16	#5	41'-4"	
a306(E)	15	#4	40'-9"	
b300(E)	67	#4	29'-8"	
b301(E)	8	#5	14'-8"	
b302(E)	1	#4	14'-7"	
b303(E)	1	#4	15'-0"	
d300(E)	46	#5	7'-0"	
d301(E)	46	#5	6'-10"	
e300(E)	24	#4	14'-8"	
t300(E)	134	#4	9'-9"	
w300(E)	40	#5	26'-1"	
w302(E)	40	#5	40'-3"	
Concrete Structures			Cu. Yd.	20.6
Concrete Superstructure			Cu. Yd.	4.2
Reinforcement Bars, Epoxy Coated			Pound	8,110
Protective Coat			Sq. Yd.	232
Bridge Deck Grooving (Longtudinal)			Sq. Yd.	162
Concrete Wearing Surface, 5"			Sq. Yd.	221
Precast Bridge Approach Slab			Sq. Ft.	1,911
Diamond Grinding (Bridge Section)			Sq. Yd.	202

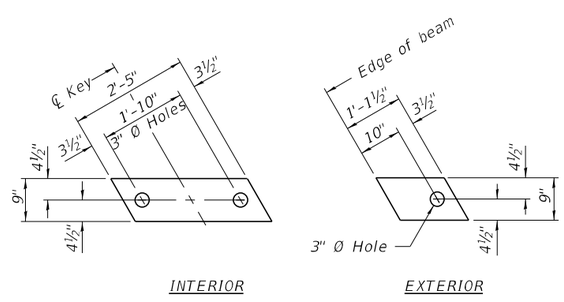

FABRIC BEARING PAD

Notes:

Bearing pads at fixed end shall be ½" thick and bearing pads at expansion end shall be ¾" thick.

Omit holes for fabric bearing pads at approach slab footing end of beams.

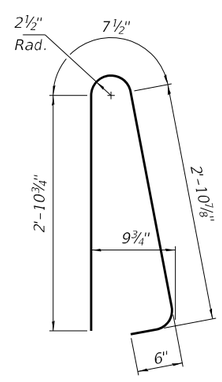

BAR d300(E)

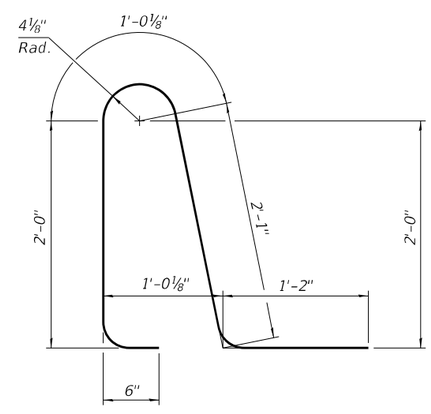

BAR d301(E)

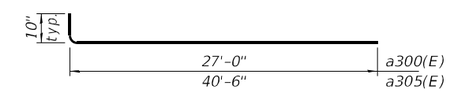

BAR a300(E) or a305(E)

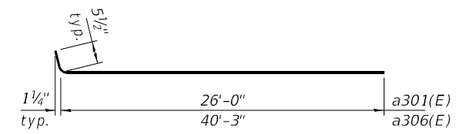

BAR a301(E) or a306(E)

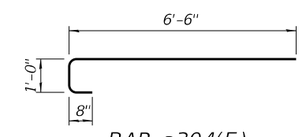

BAR a304(E)

(Sheet 4 of 4)

FILE NAME = 190501-shl-bridge.dgn	USER NAME = rhosick	DESIGNED - S.M.S.	REVISED -	STATE OF ILLINOIS DEPARTMENT OF TRANSPORTATION	PRECAST BRIDGE APPROACH SLAB (N. APPR.) (E.B.) SN 058-0139(E.B.) & 058-0140(W.B.)	F.A.I.	SECTION	COUNTY	TOTAL SHEETS	SHEET NO.
HAMPTON, LENZINI AND RENWICK, INC. 5305 STEVENSON DRIVE, SUITE 201 SPRINGFIELD, ILLINOIS 62703 ILLINOIS PROFESSIONAL DESIGN FIRM LS / PE / SE CORP. 184.000959		CHECKED - S.W.M.	REVISED -			72	(58-63HVB)BR	MACON	122	88
	PLOT SCALE =	DRAWN - R.D.H.	REVISED -					CONTRACT NO. 74705		
	PLOT DATE = 8/21/2025	CHECKED - S.M.S.	REVISED -		SHEET NO. 48 OF 70 SHEETS		ILLINOIS	FED. AID PROJECT		

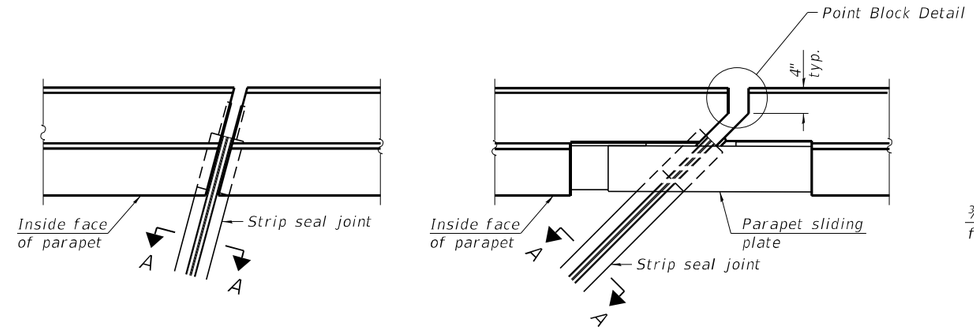

FOR SKEWS ≤ 30°

FOR SKEWS > 30°

PLAN AT PARAPET

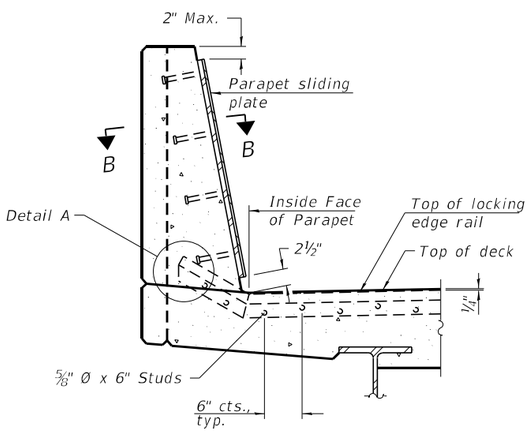

SECTION AT PARAPET

(Skews > 30° shown. Skews ≤ 30° similar except as shown in plan view.)

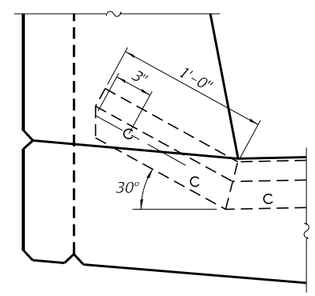

DETAIL A

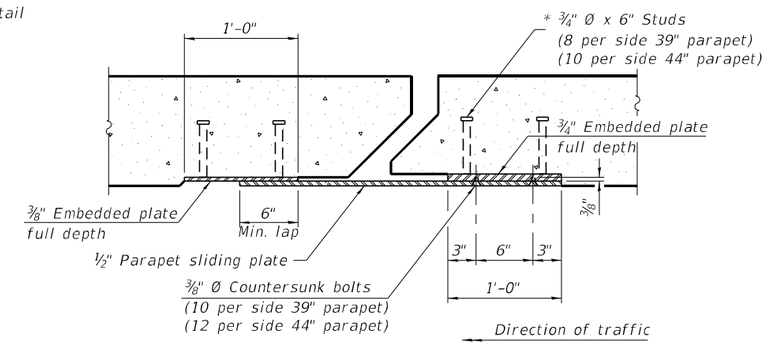

SECTION B-B

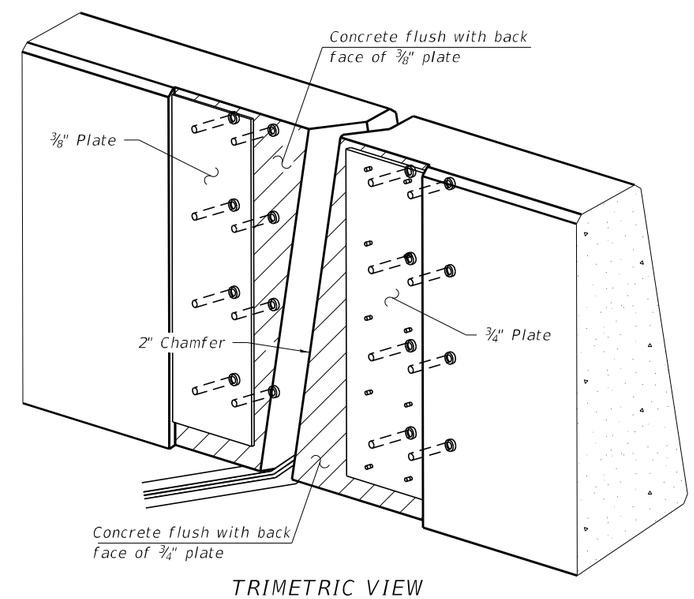

TRIMETRIC VIEW

(Showing embedded plates only)

Notes:

The strip seal shall be made continuous and shall have a minimum thickness of ¼". The configuration of the strip seal shall match the configuration of the locking edge rails. Open or "webbed" strip seal gland configurations are not permitted. The gland shall be sized for a maximum rated movement of 4 inches.

The locking edge rails depicted are configured for typical applications and are conceptual only. The actual configuration of the locking edge rails and matching strip seal may vary from manufacturer to manufacturer provided they fit the application and meet the minimum anchorage shown. Flanged edge rails, however, will not be allowed. Locking edge rails may exceed the 4½" maximum depth provided the anchorage system is revised according to the manufacturer's recommendation.

The manufacturer's recommended installation methods shall be followed.

All steel components shall be galvanized after fabrication according to Article 520.03 of the Standard Specifications.

The Maximum space between locking edge rail segments shall be 3/16" and sealed with a suitable sealant; however, any rail joint within 10' measured perpendicular to the face of the curb or parapet shall be welded as shown in the locking edge rail splice detail.

Cost of parapet sliding plates, embedded plates, and anchorage studs included with Preformed Joint Strip Seal.

39" constant slope barrier shown, 44" constant slope barrier similar as noted.

The concrete opening below the strip seal will vary based on the locking edge rail chosen by the Contractor. Deck and parapet lengths shown elsewhere in the plans are dimensioned to the concrete opening, not the joint opening, and are based on the rolled locking edge rail. If the Contractor elects to use a different locking edge rail, dimensional adjustments may be required. One exception to this would be the strip seal joint at the end of the precast bridge approach slab. For these cases the pavement connector length shall be adjusted, not the length of the bridge approach slab.

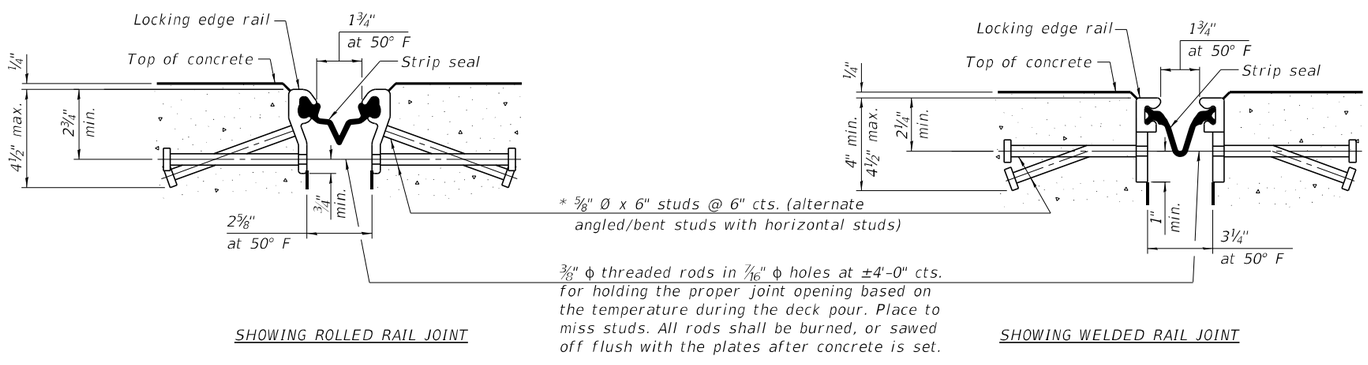

SHOWING ROLLED RAIL JOINT

SHOWING WELDED RAIL JOINT

SECTION A-A

* Granular or solid flux filled headed studs conforming to Article 1006.32 of the Std. Specs., automatically end welded.

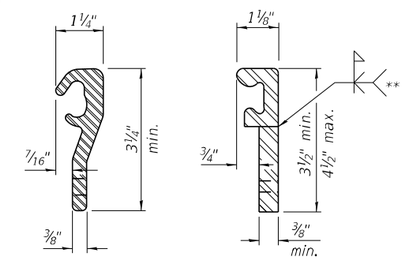

ROLLED (EXTRUDED) RAIL

WELDED RAIL

LOCKING EDGE RAILS

** Back gouge not required if complete joint penetration is verified by mock-up.

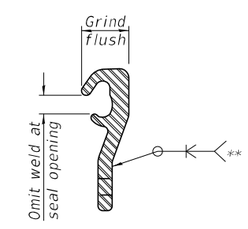

LOCKING EDGE RAIL SPLICE

The inside of the locking edge rail groove shall be free of weld residue. Rolled rail shown, welded rail similar.

SN 058-0139 (E.B.) BILL OF MATERIAL

Item	Unit	Total
Preformed Joint Strip Seal	Foot	125

SN 058-0140 (W.B.) BILL OF MATERIAL

Item	Unit	Total
Preformed Joint Strip Seal	Foot	138

EJ-SS 4-4-2025

FILE NAME = 190501-shl-bridge.dgn	USER NAME = rhosick	DESIGNED - S.M.S.	REVISED -	STATE OF ILLINOIS DEPARTMENT OF TRANSPORTATION	PREFORMED JOINT STRIP SEAL SN 058-0139(E.B.) & 058-0140(W.B.)	F.A.I.	SECTION	COUNTY	TOTAL SHEETS	SHEET NO.
HAMPTON, LENZINI AND RENWICK, INC. 3305 STEVENSON DRIVE, SUITE 201 SPRINGFIELD, ILLINOIS 62703 ILLINOIS PROFESSIONAL DESIGN FIRM LS / PE / SE CORP. 184.000959		CHECKED - S.W.M.	REVISED -			72	(58-63HVB)BR	MACON	122	89
	PLOT SCALE =	DRAWN - R.D.H.	REVISED -					CONTRACT NO. 74705		
	PLOT DATE = 8/21/2025	CHECKED - S.M.S.	REVISED -		SHEET NO. 49 OF 70 SHEETS			ILLINOIS FED. AID PROJECT		

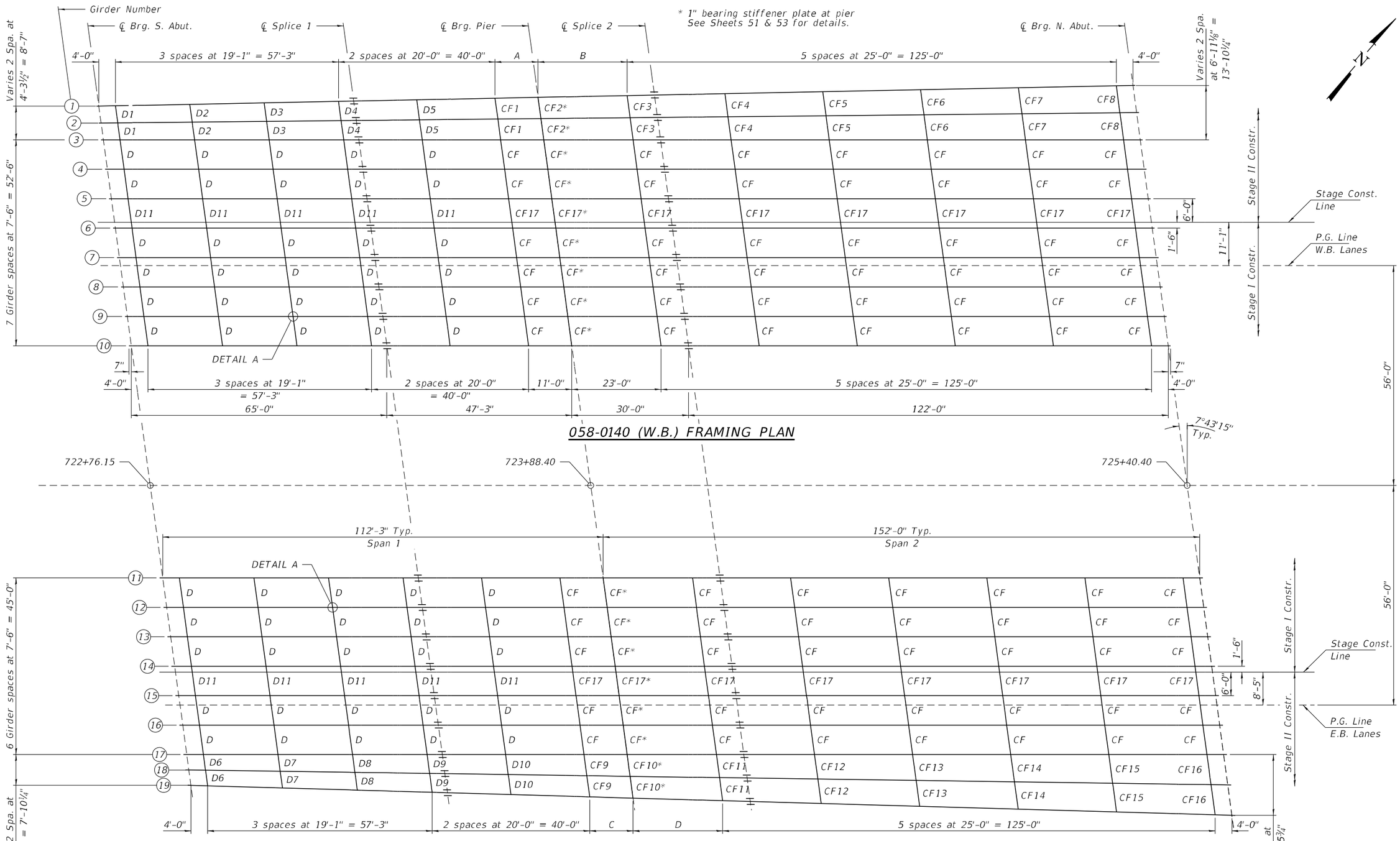

058-0140 (W.B.) FRAMING PLAN

Location	A	B
GIRDER 1	10'-8⅝"	22'-7⅜"
GIRDER 2	10'-10¼"	22'-9⅝"
GIRDERS 3 - 10	11'-0"	23'-0"

GIRDER DIMENSION TABLE (W.B.)

Dimensions are measured along ℄ of girder

Location	C	D
GIRDERS 11 - 17	11'-0"	23'-0"
GIRDER 18	11'-2¾"	23'-3¾"
GIRDER 19	11'-5¾"	23'-7⅞"

GIRDER DIMENSION TABLE (E.B.)

Dimensions are measured along ℄ of girder

058-0139 (E.B.) FRAMING PLAN

Notes:
See sheet 53 of 70 for DETAIL A.

FILE NAME = 190501-sht-bridge.dgn	USER NAME = rhosick	DESIGNED - S.M.S.	REVISED -
HAMPTON, LENZINI AND RENWICK, INC. 3345 STEVENSON DRIVE, SUITE 201 SPRINGFIELD, ILLINOIS 62703		CHECKED - S.W.M.	REVISED -
ILLINOIS PROFESSIONAL DESIGN FIRM LS / PE / SE CORP. 184.002959	PLOT SCALE =	DRAWN - R.D.H.	REVISED -
	PLOT DATE = 9/4/2025	CHECKED - S.M.S.	REVISED -

STATE OF ILLINOIS
DEPARTMENT OF TRANSPORTATION

STRUCTURAL STEEL
SN 058-0139(E.B.) & 058-0140(W.B.)

SHEET NO. 50 OF 70 SHEETS

F.A.I.	SECTION	COUNTY	TOTAL SHEETS	SHEET NO.
72	(58-63HVB)BR	MACON	122	90
		CONTRACT NO. 74705		
		ILLINOIS	FED. AID PROJECT	

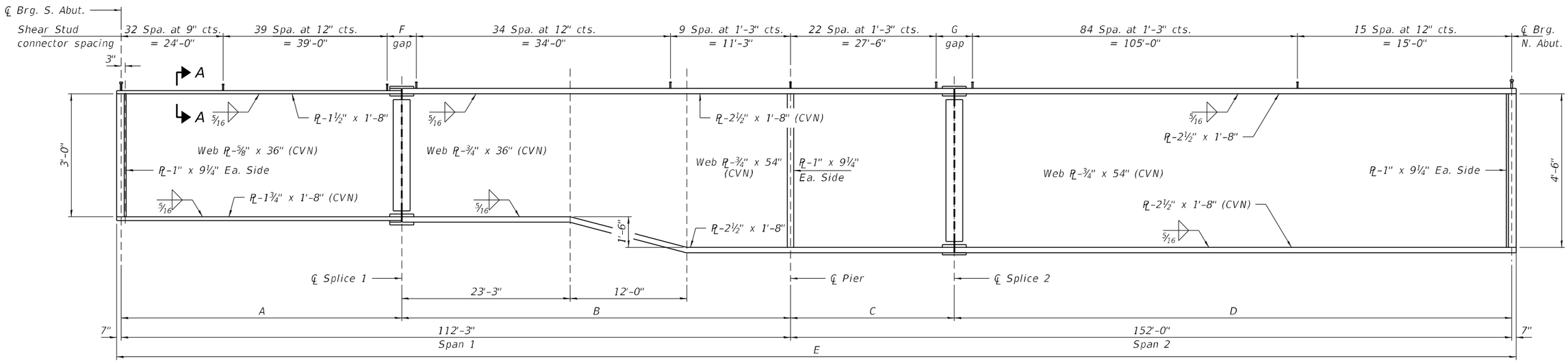

GIRDER ELEVATION

Location	A	B	C	D	E	F	G
GIRDER 1	64'-10"	47'-1½"	29'-11⅛"	121'-8⅜"	264'-9"	3'-8⅝"	4'-1⅜"
GIRDER 2	64'-11"	47'-2¼"	29'-11½"	121'-10⅛"	265'-0⅞"	3'-10¼"	4'-3⅝"
GIRDERS 3 - 10	65'-0"	47'-3"	30'-0"	122'-0"	265'-5"	4'-0"	4'-6"

GIRDER DIMENSION TABLE (W.B.)

Dimensions are measured along ℄ of girder

Location	A	B	C	D	E	F	G
GIRDERS 11 - 17	65'-0"	47'-3"	30'-0"	122'-0"	265'-5"	4'-0"	4'-6"
GIRDER 18	65'-1⅝"	47'-4⅛"	30'-0¾"	122'-3"	265'-11½"	4'-2¾"	4'-9¾"
GIRDER 19	65'-3⅜"	47'-5½"	30'-1½"	122'-6¼"	266'-6⅝"	4'-5¾"	5'-1⅞"

GIRDER DIMENSION TABLE (E.B.)

Dimensions are measured along ℄ of girder

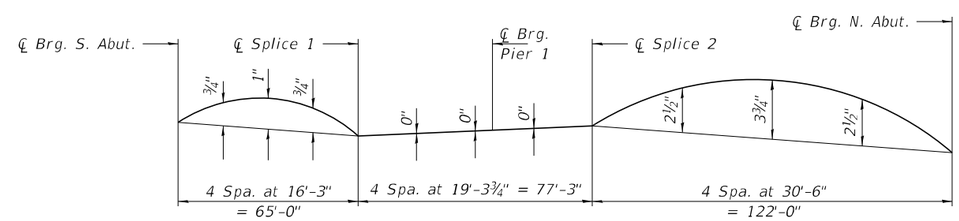

CAMBER DIAGRAM

Location	℄ Brg. S. Abut.	℄ Splice 1	℄ Brg. Pier	℄ Splice 2	℄ Brg. N. Abut.
GIRDER 1	711.71	711.65	711.61	711.58	710.95
GIRDER 2	711.80	711.75	711.71	711.69	711.08
GIRDER 3	711.88	711.85	711.82	711.80	711.22
GIRDER 4	712.04	712.00	711.97	711.95	711.36
GIRDER 5	712.19	712.15	712.12	712.10	711.50
GIRDER 6	712.33	712.29	712.26	712.24	711.64
GIRDER 7	712.45	712.40	712.37	712.35	711.74
GIRDER 8	712.40	712.35	712.32	712.29	711.68
GIRDER 9	712.28	712.23	712.19	712.17	711.56
GIRDER 10	712.14	712.08	712.04	712.02	711.40

TOP OF WEB ELEVATIONS (W.B.)

(For fabrication only)

Location	℄ Brg. S. Abut.	℄ Splice 1	℄ Brg. Pier	℄ Splice 2	℄ Brg. N. Abut.
GIRDER 11	711.91	711.84	711.79	711.75	711.10
GIRDER 12	712.07	711.99	711.93	711.90	711.24
GIRDER 13	712.22	712.14	712.08	712.05	711.38
GIRDER 14	712.36	712.28	712.22	712.19	711.52
GIRDER 15	712.48	712.40	712.33	712.30	711.62
GIRDER 16	712.44	712.36	712.29	712.25	711.58
GIRDER 17	712.32	712.24	712.17	712.13	711.45
GIRDER 18	712.24	712.14	712.06	712.01	711.28
GIRDER 19	712.17	712.04	711.94	711.88	711.12

TOP OF WEB ELEVATIONS (E.B.)

(For fabrication only)

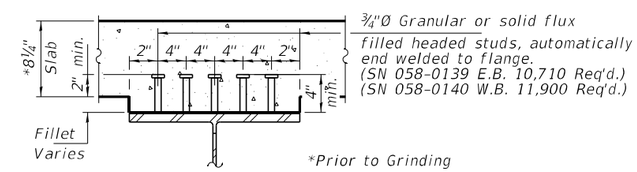

SECTION A-A

Notes:
All girders, diaphragms, connection plates, cross frames and splices shall be M270 Grade 50 and shall be metallized.
Load carrying components designated "CVN" shall conform to Chary-V-Notch Impact Energy Requirement, Zone 2.
For Structural Steel details see sheets 52 thru 55 of 70.

FILE NAME = 190501-sht-bridge.dgn	USER NAME = rhosick	DESIGNED - S.M.S.	REVISED -
HAMPTON, LENZINI AND RENWICK, INC. 3085 STEVENSON DRIVE, SUITE 201 SPRINGFIELD, ILLINOIS 62703		CHECKED - S.W.M.	REVISED -
ILLINOIS PROFESSIONAL DESIGN FIRM LS / PE / SE CORP. 184-000959	PLOT SCALE =	DRAWN - R.D.H.	REVISED -
	PLOT DATE = 9/4/2025	CHECKED - S.M.S.	REVISED -

STATE OF ILLINOIS
DEPARTMENT OF TRANSPORTATION

STRUCTURAL STEEL DETAILS
SN 058-0139(E.B.) & 058-0140(W.B.)

SHEET NO. 51 OF 70 SHEETS

F.A.I.	SECTION	COUNTY	TOTAL SHEETS	SHEET NO.
72	(58-63HVB)BR	MACON	122	91

CONTRACT NO. 74705

ILLINOIS FED. AID PROJECT

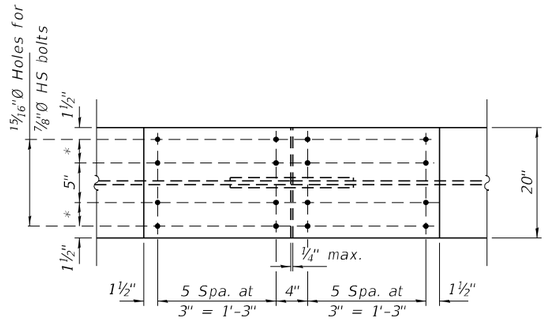

PLAN
(Top & Bottom Outside Plates)

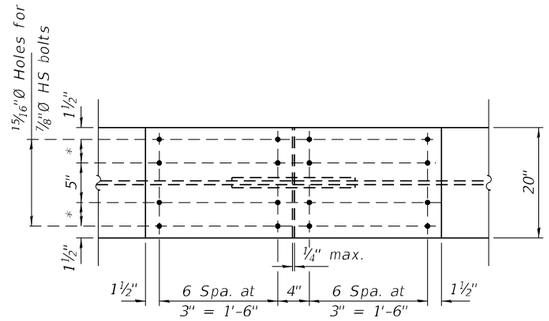

PLAN
(Top & Bottom Outside Plates)

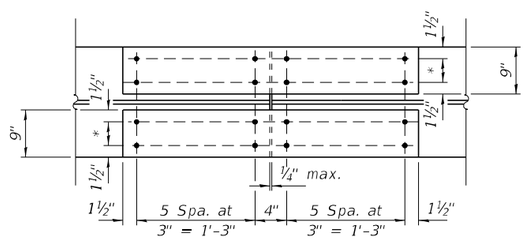

PLAN
(Top & Bottom Inside Plates)

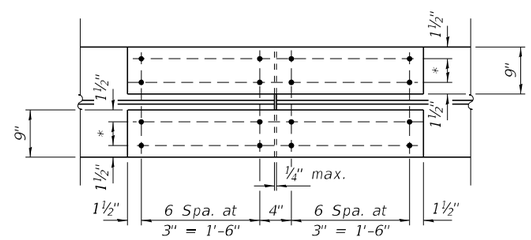

PLAN
(Top & Bottom Inside Plates)

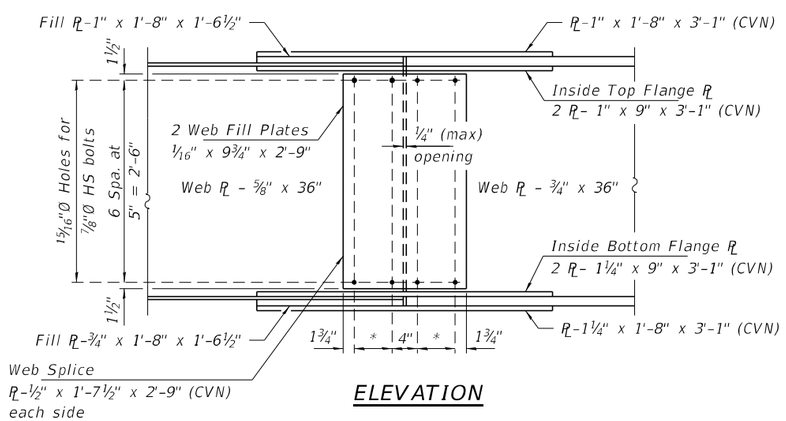

ELEVATION

FIELD SPLICE 1
10 - SN 058-0140 (W.B.)
9 - SN 058-0139 (E.B.)
*2 Spaces at 3" = 6"

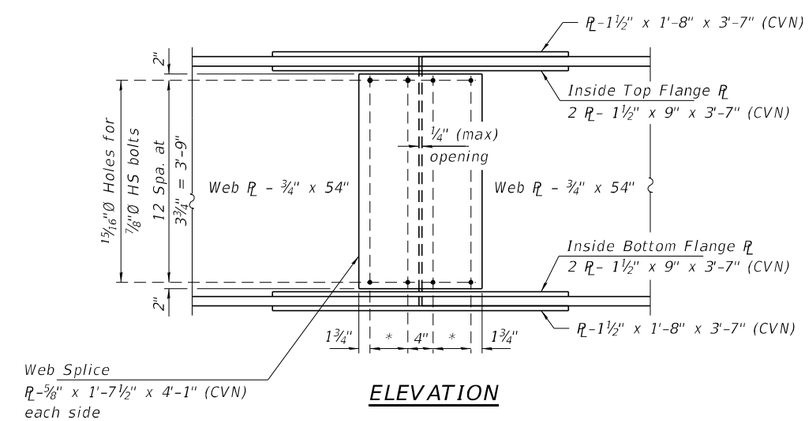

ELEVATION

FIELD SPLICE 2
10 - SN 058-0140 (W.B.)
9 - SN 058-0139 (E.B.)
*2 Spaces at 3" = 6"

Notes:
Load carrying components designated "CVN" shall conform to the Charpy-V-Notch Impact Energy Requirement, Zone 2.
All Structural Steel for splice plates, shall conform to the requirements of AASHTO M270, G50 and shall be metallized.

FILE NAME = 190501-sht-bridge.dgn	USER NAME = rhosick	DESIGNED - S.M.S.	REVISED -	STATE OF ILLINOIS DEPARTMENT OF TRANSPORTATION	STRUCTURAL STEEL DETAILS SN 058-0139(E.B.) & 058-0140(W.B.)	F.A.I.	SECTION	COUNTY	TOTAL SHEETS / SHEET NO.
HAMPTON, LENZINI AND RENWICK, INC. 3085 STEVENSON DRIVE, SUITE 201 SPRINGFIELD, ILLINOIS 62703		CHECKED - S.W.M.	REVISED -			72	(58-63HVB)BR	MACON	122 / 92
ILLINOIS PROFESSIONAL DESIGN FIRM LS / PE / SE CORP. 184.000959	PLOT SCALE =	DRAWN - R.D.H.	REVISED -					CONTRACT NO. 74705	
	PLOT DATE = 8/21/2025	CHECKED - S.M.S.	REVISED -		SHEET NO. 52 OF 70 SHEETS			ILLINOIS FED. AID PROJECT	

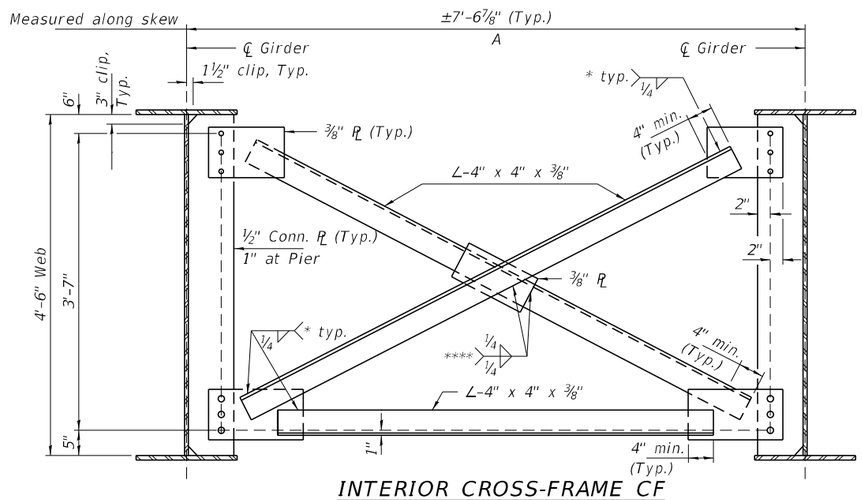

INTERIOR CROSS-FRAME CF

(88-required)

* Fillet weld angles along 3 sides on one face of gusset plate; however, if cross-frames are galvanized, weld all-around.

**** If cross-frames are galvanized, weld all-around.

Notes:
Bolts for cross frames shall use 15/16" Ø holes for all ¾" Ø bolts.
Two hardened washers required for each set of oversized holes.

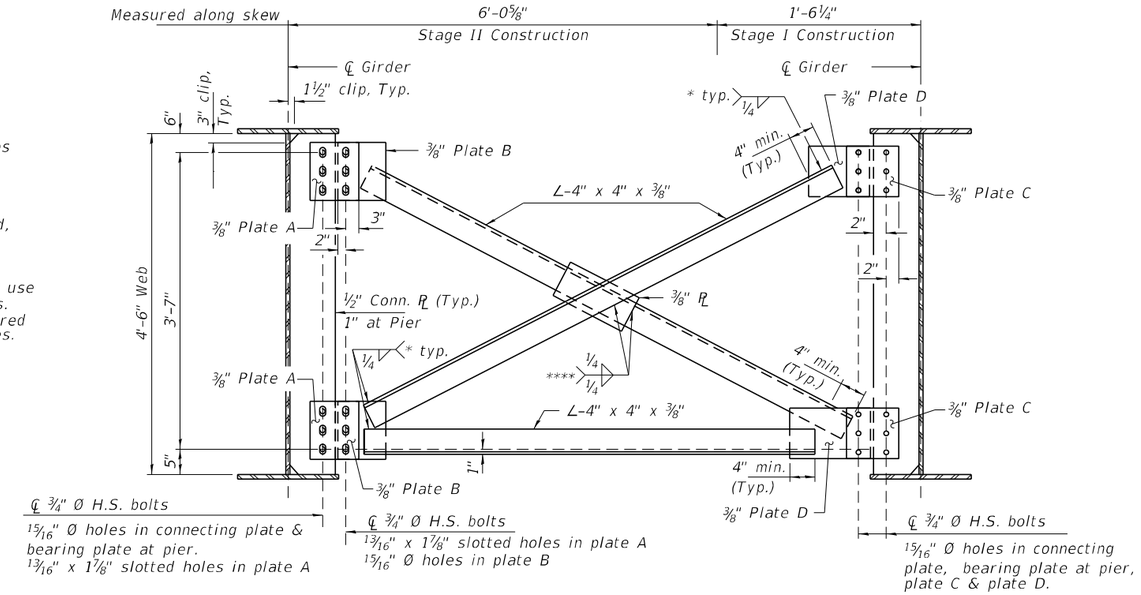

INTERIOR CROSS-FRAME CF17

(16-required)

Note:
For Stage I Construction, Girders 6 and 14, Provide 15/16" holes in connecting plate & bearing plate at the pier, in the right vertical line of bolts in Plate C and in the left vertical line of bolts in Plate D.
For Stage II Construction, Girders 5 and 15, Provide 15/16" holes in connecting plate & bearing plate at the pier and 13/16" x 1⅞" long slotted holes in the left vertical line of bolts in Plate A. Provide 13/16" x 1⅞" long slotted holes in the right vertical line of bolts in Plate A and 15/16" holes in Plate B.
Bolts in slots shall be finger tight until the second stage pour is complete and fully tightened after completion of the deck pour for Stage II Construction. Position slots so bolts start at one end with no concrete load and finish near the opposite end under deck load, allowing maximum displacement without laterally stressing main members.

Location	A	NO. REQUIRED
CF1	5'-4"	2
CF2	5'-5½"	2
CF3	5'-8½"	2
CF4	5'-11½"	2
CF5	6'-2½"	2
CF6	6'-5½"	2
CF7	6'-8½"	2
CF8	6'-11⅞"	2
CF9	5'-5"	2
CF10	5'-7¼"	2
CF11	6'-0"	2
CF12	6'-4"	2
CF13	6'-8⅜"	2
CF14	7'-0⅝"	2
CF15	7'-4⅞"	2
CF16	7'-9"	2

CROSS FRAME DIMENSION TABLE

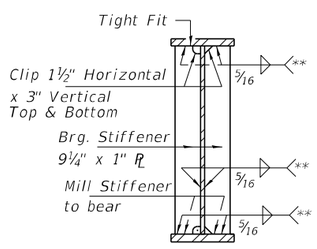

SECTION AT ABUTMENT & PIER BEARING STIFFENER PL'S

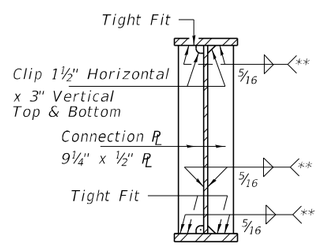

SECTION AT DIAPHRAGM AND CROSS-FRAME CONNECTION PL'S

**Terminate ¼" (±⅛") from the end of plate intersects

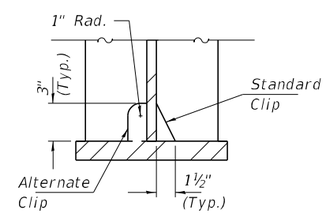

CLIP DETAIL

Use Standard Clip or Alternate Clips in all locations. Do not combine use of different clip type.

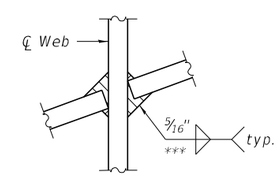

WEB WELD DETAIL (SKEWED)

*** ⅜" (Typ. Connection PL)
7/16" (Bearing Stiffner at Pier)

Notes:
For additional structural steel details see sheets 51, 52, 54 & 55 of 70.
All splices and diaphragms, including stiffeners and diaphragms shall be AASHTO M270, Grade 50 (Metallized).
All cross-frames or diaphragms between girders shall be installed with erection pins and bolts in accordance with the erection plan approved by the Engineer. Individual cross-frames or diaphragms at supports may be temporarily disconnected to install bearing anchor bolts.

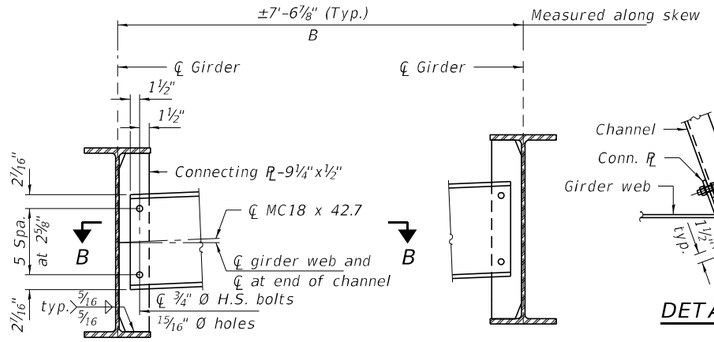

INTERIOR DIAPHRAGM D

(55-required)

Notes:

Two hardened washers required for each set of oversized holes.

Alternate channels of equal depth and larger weight are permitted to facilitate material acquisition. Alternate channels, if utilized, shall be provided at no additional cost to the Department.

Clip channel as necessary for ease of installation of diaphragms on skews.

Location	B	NO. REQUIRED
D1	4'-4½"	2
D2	4'-6¾"	2
D3	4'-9"	2
D4	4'-11¼"	2
D5	5'-1⅝"	2
D6	4'-0⅜"	2
D7	4'-4"	2
D8	4'-6⅞"	2
D9	4'-10⅛"	2
D10	5'-1½"	2

DIAPHRAGM DIMENSION TABLE

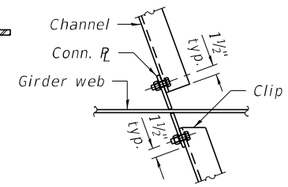

DETAIL A

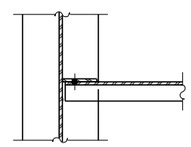

SECTION B-B

INTERIOR GIRDER MOMENT TABLE				
		0.35 Sp. 1	Pier	0.60 Sp. 2
Is	(in⁴)	25,351	89,700	89,700
Ic(n)	(in⁴)	56,760	161,108	161,108
Ic(3n)	(in⁴)	41,732	122,987	122,987
Ic(cr)	(in⁴)	–	98,084	–
Ss	(in³)	1,361	3,041	3,041
Sc(n)	(in³)	1,745	3,643	3,643
Sc(3n)	(in³)	1,610	3,381	3,381
Sc(cr)	(in³)	–	2,916	–
Sx	(in³)	1,680	3,111	3,465
DC1	(k/')	1.142	1.349	1.344
MDC1	('k)	649	-2,998	2,528
DC2	(k/')	0.190	0.190	0.190
MDC2	('k)	117	-443	350
DW	(k/')	0.375	0.375	0.375
MDW	('k)	232	-873	690
LLDF		0.590	0.602	0.581
M_{LL+IM}	('k)	1,386	-2,210	2,448
fl (Strength I)	(ksi)	0	0	0
$M_u + \frac{1}{3} fl Sx$	('k)	3,731	-9,479	8,917
Øf Mn	('k)	7,940	–	17,256
fs DC1	(ksi)	5.7	-11.8	10.0
fs DC2	(ksi)	0.9	-1.8	1.2
fs DW	(ksi)	1.7	-3.6	2.5
fs (LL+IM)	(ksi)	9.5	-9.1	8.1
fl (Service II)	(ksi)	0	0	0
fs + fl/2 (Service II)	(ksi)	20.7	-29.1	24.2
Service II Resistance	(ksi)	47.5	47.5	47.5
fs + fl/3 (Strength I)	(ksi)	–	-38.4	–
Øf Fn	(ksi)	–	-50	–
Vf	(k)	72.4		77.2

INTERIOR GIRDER REACTION TABLE				
		S. Abut.	Pier	N. Abut.
LLDF		0.802	0.796	0.797
OCF		1.03	–	1.02
RDC1	(k)	38.9	219.3	82.4
RDC2	(k)	6.7	32.0	11.5
RDW	(k)	13.3	63.1	22.8
R_{LL}	(k)	74.8	169.1	87.9
R_{IM}	(k)	16.9	30.4	17.5
RTotal (Strength I)(Impact)	(k)	237.3	757.8	336.0
RTotal (Strength I)(No Impact)	(k)	207.8	704.6	305.3

I_s, S_s : Non-composite moment of inertia and section modulus of the steel section used for computing f_s(Total-Strength I, and Service II) due to non-composite dead loads (in.⁴ and in.³).

$I_c(n)$, $S_c(n)$: Composite moment of inertia and section modulus of the steel and deck based upon the modular ratio, "n", used for computing f_s(Total-Strength I, and Service II) in uncracked sections due to short-term composite live loads (in.⁴ and in.³).

$I_c(3n)$, $S_c(3n)$: Composite moment of inertia and section modulus of the steel and deck based upon 3 times the modular ratio, "3n", used for computing f_s(Total-Strength I, and Service II) in uncracked sections, due to long-term composite (superimposed) dead loads (in.⁴ and in.³).

$I_c(cr)$, $S_c(cr)$: Composite moment of inertia and section modulus of the steel and longitudinal deck reinforcement, used for computing f_s (Total-Strength I and Service II) in cracked sections, due to both short-term composite live loads and long-term composite (superimposed) dead loads (in.⁴ and in.³).

S_x : Section modulus about the major axis of a section to the controlling flange, tension or compression, taken as yield moment with respect to the controlling flange over the yield strength of the controlling flange (in.³).

DC1: Un-factored non-composite dead load (kips/ft.).

MDC1: Un-factored moment due to non-composite dead load (kip-ft.).

DC2: Un-factored long-term composite (superimposed excluding future wearing surface) dead load (kips/ft.).

MDC2: Un-factored moment due to long-term composite (superimposed excluding future wearing surface) dead load (kip-ft.).

DW: Un-factored long-term composite (superimposed future wearing surface only) dead load (kips/ft.).

MDW: Un-factored moment due to long-term composite (superimposed future wearing surface only) dead load (kip-ft.).

LLDF: Live Load Distribution Factor for moment and shear computed according to Article 4.6.2.2 and further IDOT provisions.

M_{LL+IM}: Un-factored live load moment plus dynamic load allowance (impact) (kip-ft.).

M_u : Strength I load combination of factored design moments (kip-ft.). $1.25\ (MDC1 + MDC2) + 1.5\ MDW + 1.75\ M_{LL+IM}$

f_ℓ : Factored calculated flange lateral bending stress as calculated using Article 6.10.1.6 and as further simplified by IDOT provisions (ksi).

$\phi_f M_n$: Factored nominal flexural resistance of the section determined as specified in Article 6.10.7.1 or A6 as applicable (kip-ft.).

f_s DC1: Un-factored stress at edge of flange for controlling steel flange due to vertical non-composite dead loads as calculated below (ksi).
M_{DC1} / S_s

f_s DC2: Un-factored stress at edge of flange for controlling steel flange due to vertical composite dead loads as calculated below (ksi).
$M_{DC2} / S_c(3n)$ or $M_{DC2} / S_c(cr)$ as applicable.

f_s DW: Un-factored stress at edge of flange for controlling steel flange due to vertical composite future wearing surface loads as calculated below (ksi).
$M_{DW} / S_c(3n)$ or $M_{DW} / S_c(cr)$ as applicable.

f_s (LL + IM): Un-factored stress at edge of flange for controlling steel flange due to vertical composite live load plus impact loads as calculated below (ksi).
$M_{LL+IM} / S_c(n)$ or $M_{LL+IM} / S_c(cr)$ as applicable.

$f_s + f_\ell/2$ (Service II): Sum of stresses as computed below (ksi).
f_s DC1 + f_s DC2 + f_s DW + 1.3 f_s (LL + IM) + $f_\ell/2$

Service II Resistance: Composite ($0.95R_hF_{yf}$) or noncomposite ($0.80R_hF_{yf}$) stress capacity according to Article 6.10.4.2 (ksi).

$f_s + f_\ell/3$ (Strength I): Sum of stresses as computed below on non-compact sections (ksi).
$1.25\ (f_s\ DC1 + f_s\ DC2) + 1.5\ f_s\ DW + 1.75\ f_s\ (LL + IM) + f_\ell/3$

$\phi_f F_n$: Factored nominal flexural resistance of the section as specified in Article 6.10.7.2 or 6.10.8 as applicable (ksi).

V_f: Maximum factored shear range in span computed according to Article 6.10.10.

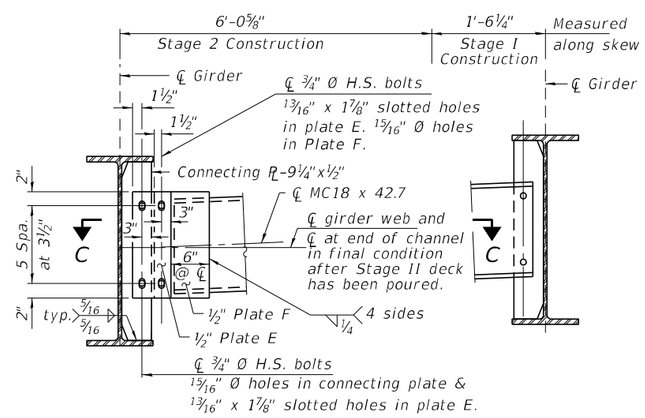

INTERIOR DIAPHRAGM D11

(10-required)

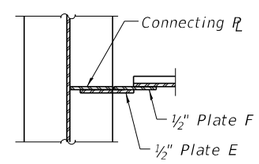

SECTION C-C

Notes:

Provide 15/16" holes in connecting plate and 13/16" x 1⅞" long slotted holes in the left vertical line of bolts in Plate E. Provide 13/16" x 1⅞" long slotted holes in the right vertical line of bolts in Plate E and 15/16" holes in Plate F.

Bolts in slots shall be finger tight until the second stage pour is complete and fully tightened after completion of the deck pour for Stage II Construction. Position slots so bolts start at one end with no concrete load and finish near the opposite end under deck load, allowing maximum displacement without laterally stressing main members. Use Diaphragm D details on Girders 6 and 14 and Diaphragm D11 details on Girders 5 and 15 respectively.

Notes:

For additional structural steel details see sheets 51, 52, 53 & 55 of 70.

All splices and diaphragms, including stiffeners and diaphragms shall be AASHTO M270, Grade 50 (Metallized).

All cross-frames or diaphragms between girders shall be installed with erection pins and bolts in accordance with the erection plan approved by the Engineer. Individual cross-frames or diaphragms at supports may be temporarily disconnected to install bearing anchor bolts.

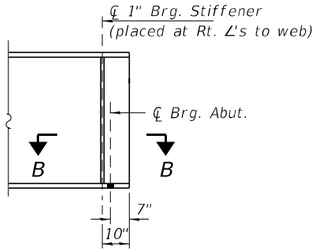

TYP. END OF GIRDER ELEVATION

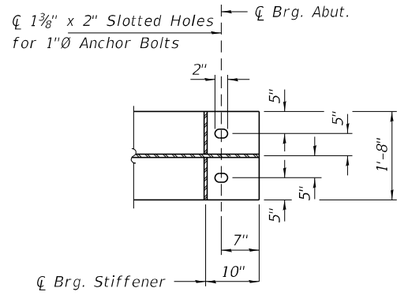

SECTION B-B

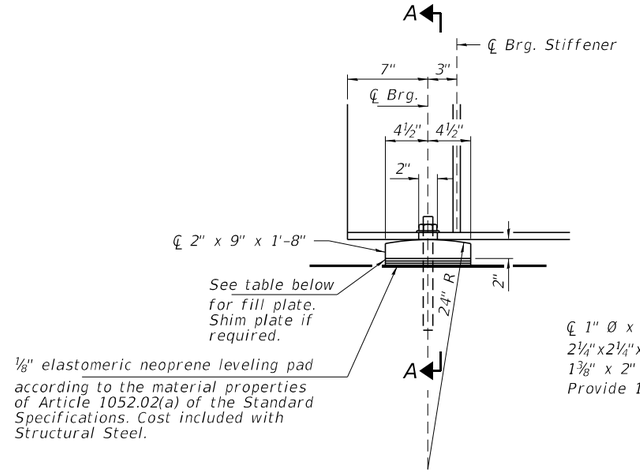

ELEVATION

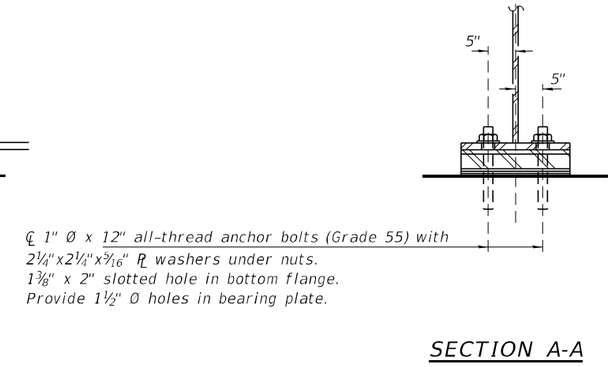

SECTION A-A

FIXED BEARING AT ABUTMENTS
(38 required)

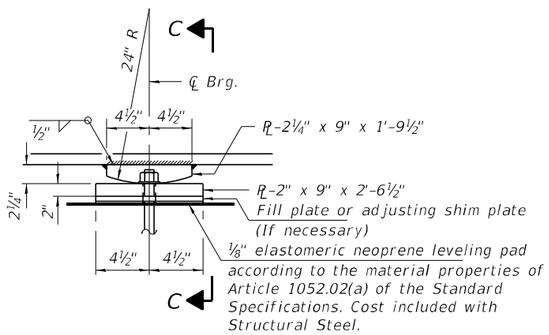

ELEVATION AT PIER

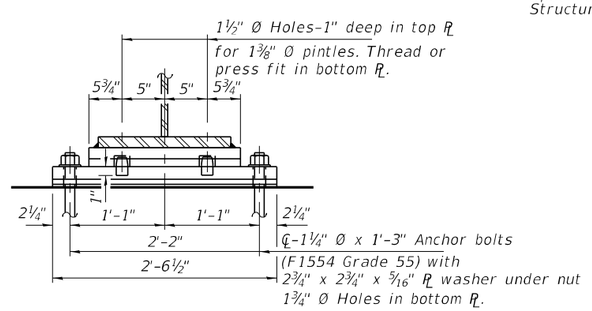

SECTION C-C

FIXED BEARING AT PIER
(19 required)

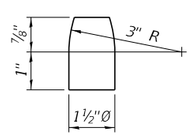

PINTLE

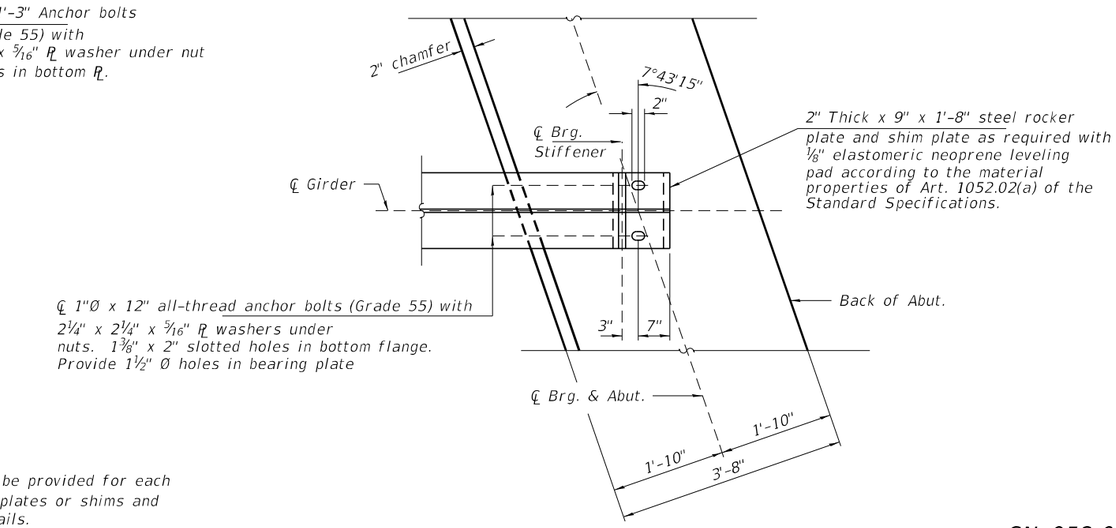

PLAN
(Showing bottom flange of steel beam at abutments)

SN 058-0140 (W.B.) FILL PLATE REQUIRED

Location	Thickness (in.)
Girder 7 (S. Abut.)	0.50" (½")
Girder 7 (N. Abut.)	1.25" (1¼")
Girder 7 (Pier)	0.50" (½")
Girder 8 (N. Abut.)	0.50" (½")

SN 058-0139 (E.B.) FILL PLATE REQUIRED

Location	Thickness (in.)
Girder 15 (S. Abut.)	0.375" (⅜")
Girder 15 (Pier)	0.50" (½")
Girder 15 (N. Abut.)	1.25" (1¼")
Girder 16 (N. Abut.)	0.625" (⅝")

Notes:

Two ⅛" adjusting shims shall be provided for each bearing in addition to all other plates or shims and placed as shown on bearing details.

Anchor bolts shall be according to Article 521.06 of the Standard Specifications.

Girders shall be braced for stability during erection and remain braced until deck is poured and cured.

See sheet 53 of 70 for bearing stiffener dimensions and details.

Anchor bolts at all supports shall be installed as each member is erected unless an equivalent temporary means of lateral restraint is used.

All structural steel shall be AASHTO M270 Grade 50 and shall be metallized. See Special Provision for "Metallizing of Structural Steel."

All bearing plates, side retainers, anchor bolts, nuts, washers and pintles shall be galvanized according to AASHTO M111 or M232 as applicable.

SN 058-0140 (W.B.) BILL OF MATERIAL

Item	Unit	Quantity
Anchor Bolts, 1"	Each	40
Anchor Bolts, 1¼"	Each	20

SN 058-0139 (E.B.) BILL OF MATERIAL

Item	Unit	Quantity
Anchor Bolts, 1"	Each	36
Anchor Bolts, 1¼"	Each	18

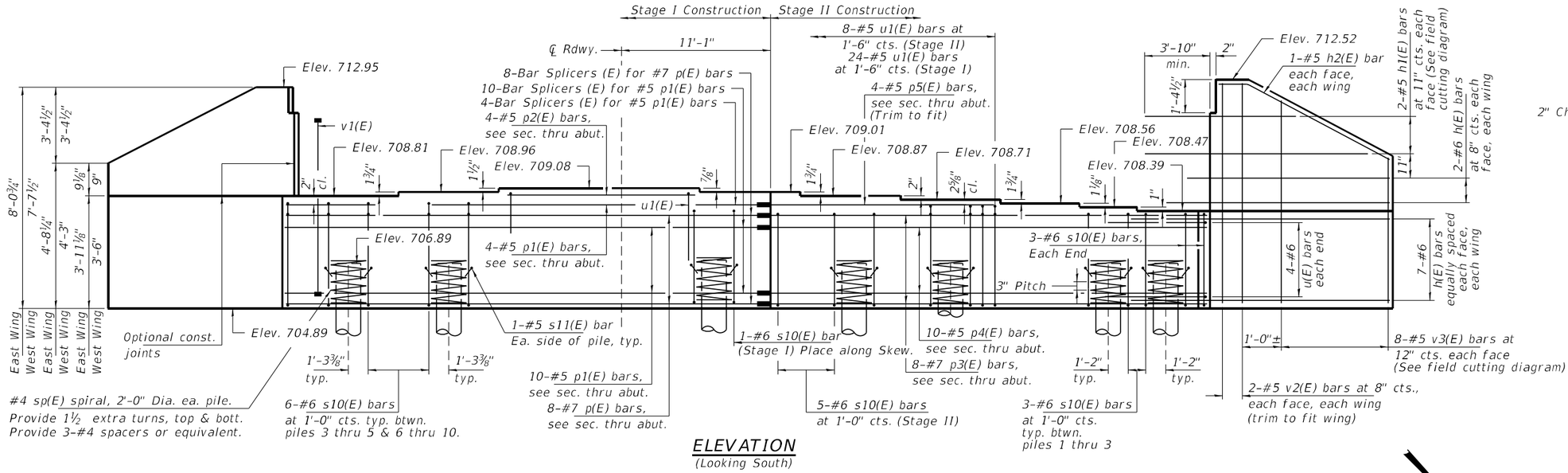

ELEVATION
(Looking South)

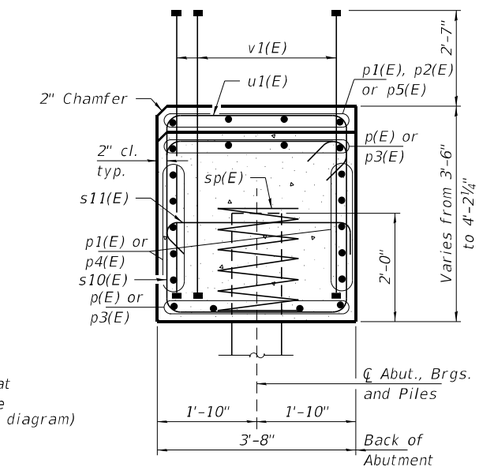

SEC. THRU ABUT.
Dimensions at Rt. ∠'s

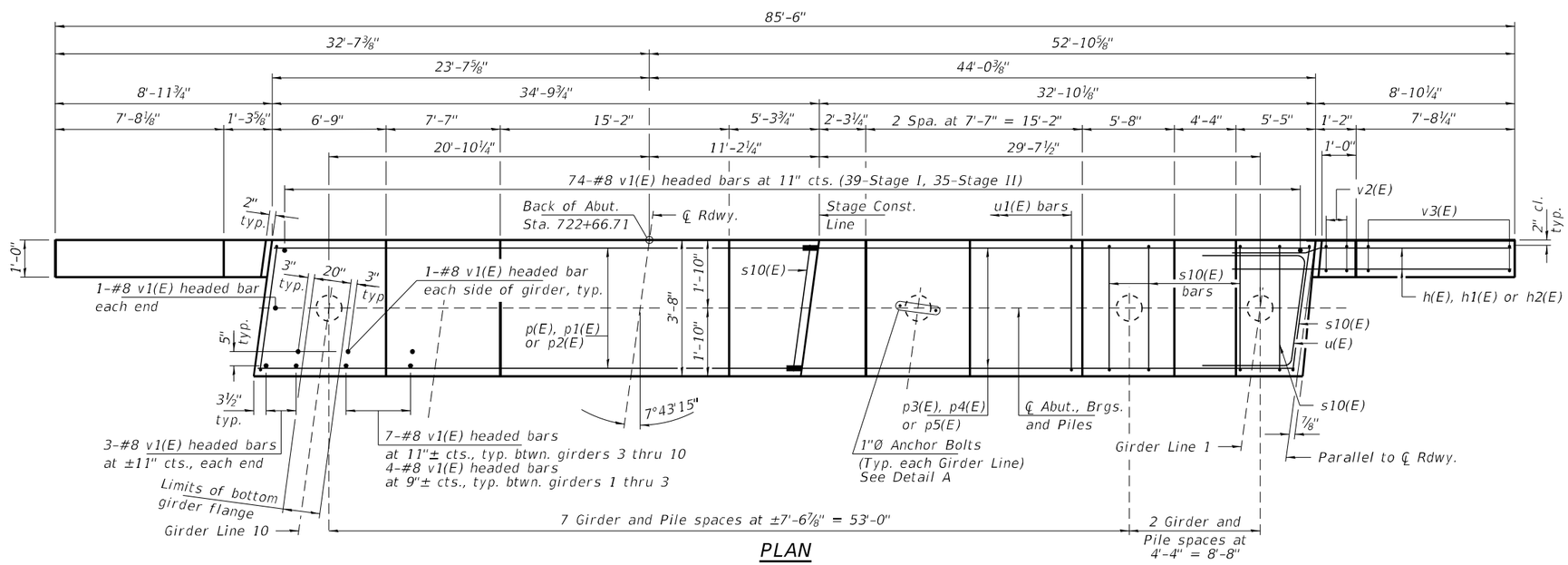

PLAN

BILL OF MATERIAL - S. ABUT. (W.B.)

BAR	NO.	SIZE	LENGTH	SHAPE
h(E)	36	#6	12'-8"	
h1(E)	4	#5	17'-11"	
h2(E)	4	#5	9'-0"	
p(E)	8	#7	34'-7"	
p1(E)	14	#5	34'-7"	
p2(E)	4	#5	14'-8"	
p3(E)	8	#7	32'-7"	
p4(E)	10	#5	32'-7"	
p5(E)	4	#5	10'-2"	
s10(E)	54	#6	14'-4"	
s11(E)	20	#5	4'-4"	
* sp(E)	10	#4	2'-0"	
u(E)	8	#6	11'-11"	
u1(E)	32	#5	6'-8"	
v1(E)	159	#8	5'-11"	
v2(E)	8	#5	7'-8"	
v3(E)	16	#5	11'-7"	
Structure Excavation			Cu. Yd.	125
Concrete Structures			Cu. Yd.	39.4
Reinf. Bars, Epoxy Coated			Pound	7,650
Furn. Metal Shell Piles 16"x0.375"			Foot	540
Driving Piles			Foot	540
Test Pile Metal Shells			Each	1

* Length is height of spiral.

PILE DATA

Type: Metal Shell Piles 16"x0.375"
Nominal Required Bearing: 545 Kips/Pile
Factored Resistance Available: 300 Kips/Pile
Est. Length: 60 Ft/Pile
No. Production Piles: 9
No. Test Piles: 1

Notes: One test pile shall be driven in a permanent location at the South Abutment.

Notes:
Pour steps monolithically with cap.
Space reinforcement in cap to miss anchor bolt locations.
Bar terminators, paid for separately, See Total Bill of Material.
For details of piles see sheet 65 of 70.
For Detail A and Reinforcement details see sheet 60 of 70.

FILE NAME = 190501-sht-bridge.dgn	USER NAME = rhosick	DESIGNED - S.M.S.	REVISED -
HAMPTON, LENZINI AND RENWICK, INC. 5345 STEVENSON DRIVE, SUITE 201 SPRINGFIELD, ILLINOIS 62703		CHECKED - S.W.M.	REVISED -
ILLINOIS PROFESSIONAL DESIGN FIRM LS / PE / SE CORP. 184.000959	PLOT SCALE =	DRAWN - R.D.H.	REVISED -
	PLOT DATE = 8/21/2025	CHECKED - S.M.S.	REVISED -

STATE OF ILLINOIS
DEPARTMENT OF TRANSPORTATION

SOUTH ABUTMENT (W.B.)
SN 058-0139(E.B.) & 058-0140(W.B.)

SHEET NO. 56 OF 70 SHEETS

F.A.I.	SECTION	COUNTY	TOTAL SHEETS	SHEET NO.
72	(58-63HVB)BR	MACON	122	96
		CONTRACT NO. 74705		
		ILLINOIS FED. AID PROJECT		

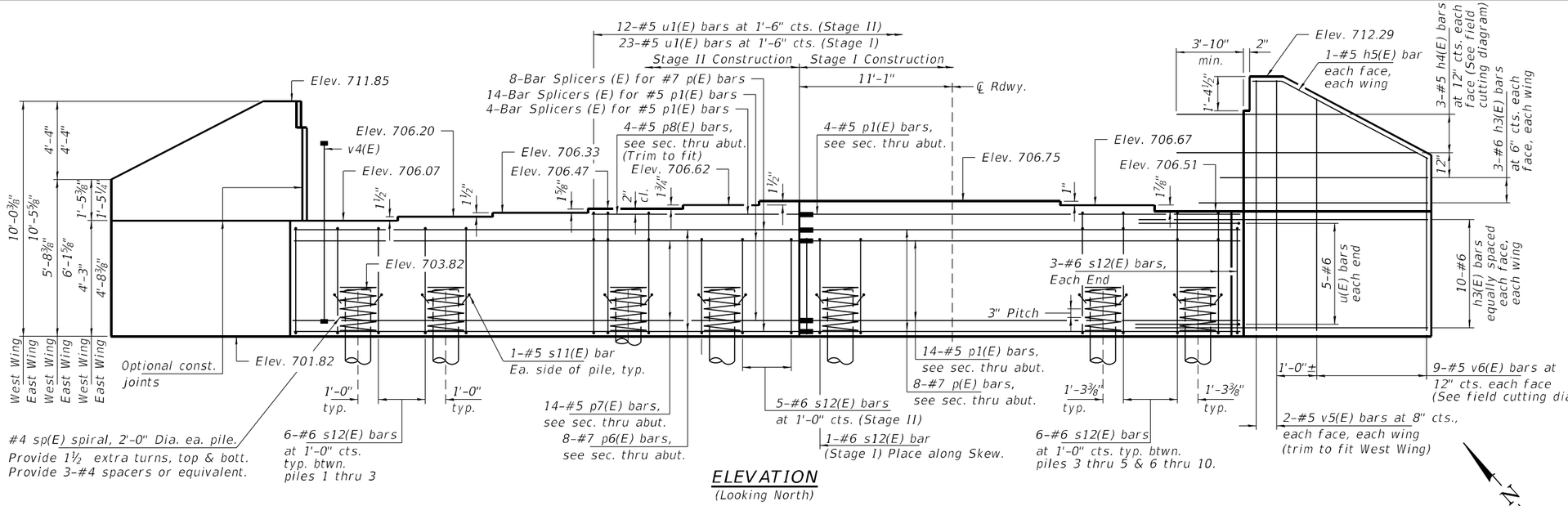

ELEVATION
(Looking North)

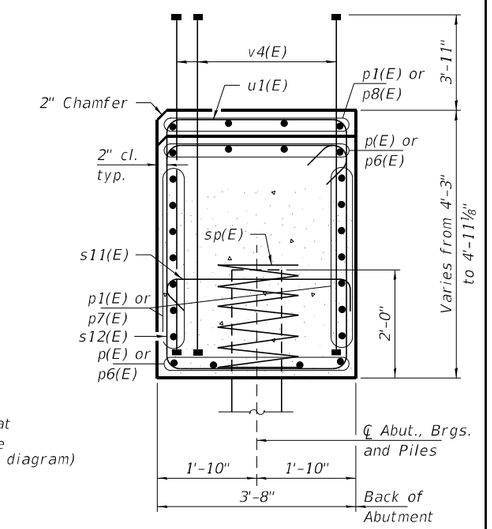

SEC. THRU ABUT.
Dimensions at Rt. ∠'s

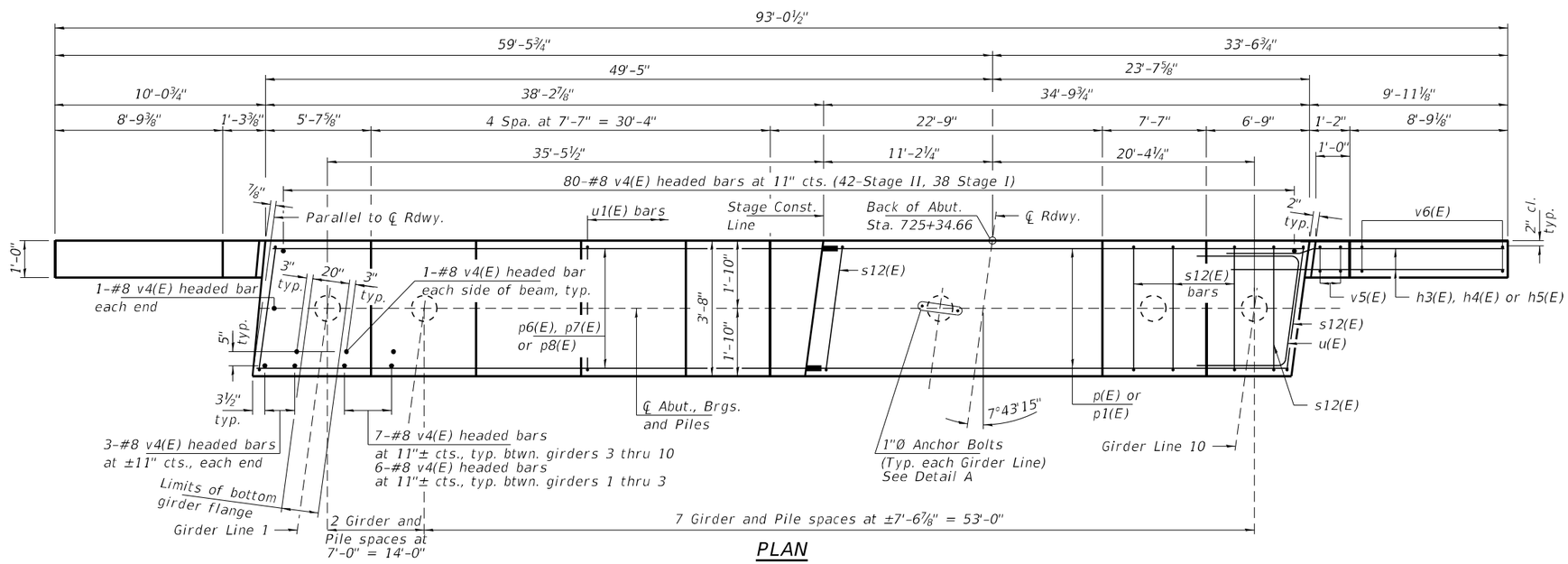

PLAN

PILE DATA

Type: _____ Metal Shell Piles 16"x0.375"
Nominal Required Bearing: _____ 765 Kips/Pile
Factored Resistance Available: _____ 420 Kips/Pile
Est. Length: _____ 105 Ft/Pile
No. Production Piles: _____ 9
No. Test Piles: _____ 1

Notes: One test pile shall be driven in a permanent location at the North Abutment.

Notes:
Pour steps monolithically with cap.
Space reinforcement in cap to miss anchor bolt locations.
Bar terminators, paid for separately, See Total Bill of Material.
For details of piles see sheet 65 of 70.
For Detail A and Reinforcement details see sheet 60 of 70.

BILL OF MATERIAL - N. ABUT. (W.B.)

BAR	NO.	SIZE	LENGTH	SHAPE
h3(E)	52	#6	13'-10"	
h4(E)	6	#5	19'-9"	
h5(E)	4	#5	10'-5"	
p(E)	8	#7	34'-7"	
p1(E)	18	#5	34'-7"	
p6(E)	8	#7	38'-0"	
p7(E)	14	#5	38'-0"	
p8(E)	4	#5	17'-1"	
s11(E)	20	#5	4'-4"	
s12(E)	60	#6	15'-10"	
* sp(E)	10	#4	2'-0"	
u(E)	10	#6	11'-11"	
u1(E)	35	#5	6'-8"	
v4(E)	169	#8	8'-3"	
v5(E)	8	#5	10'-2"	
v6(E)	18	#5	15'-6"	
Structure Excavation			Cu. Yd.	215
Concrete Structures			Cu. Yd.	51.8
Reinf. Bars, Epoxy Coated			Pound	10,170
Furn. Metal Shell Piles 16"x0.375"			Foot	945
Driving Piles			Foot	945
Test Pile Metal Shells			Each	1

* Length is height of spiral.

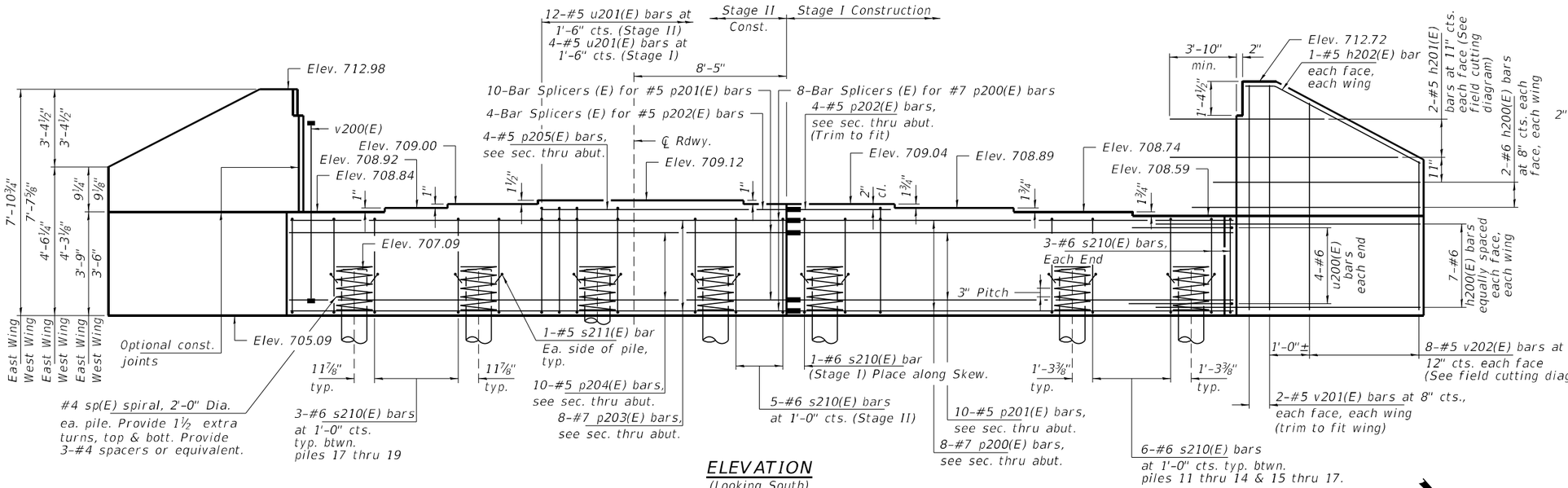

ELEVATION
(Looking South)

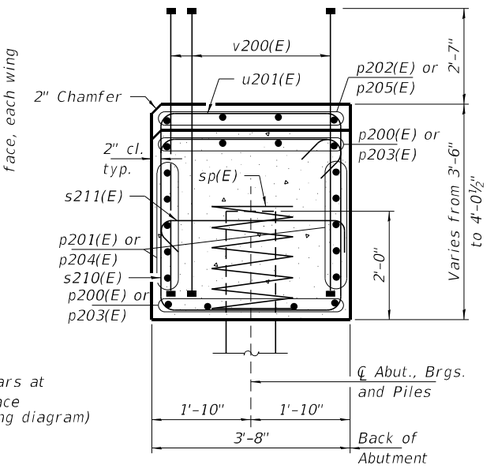

SEC. THRU ABUT.
Dimensions at Rt. ℄'s

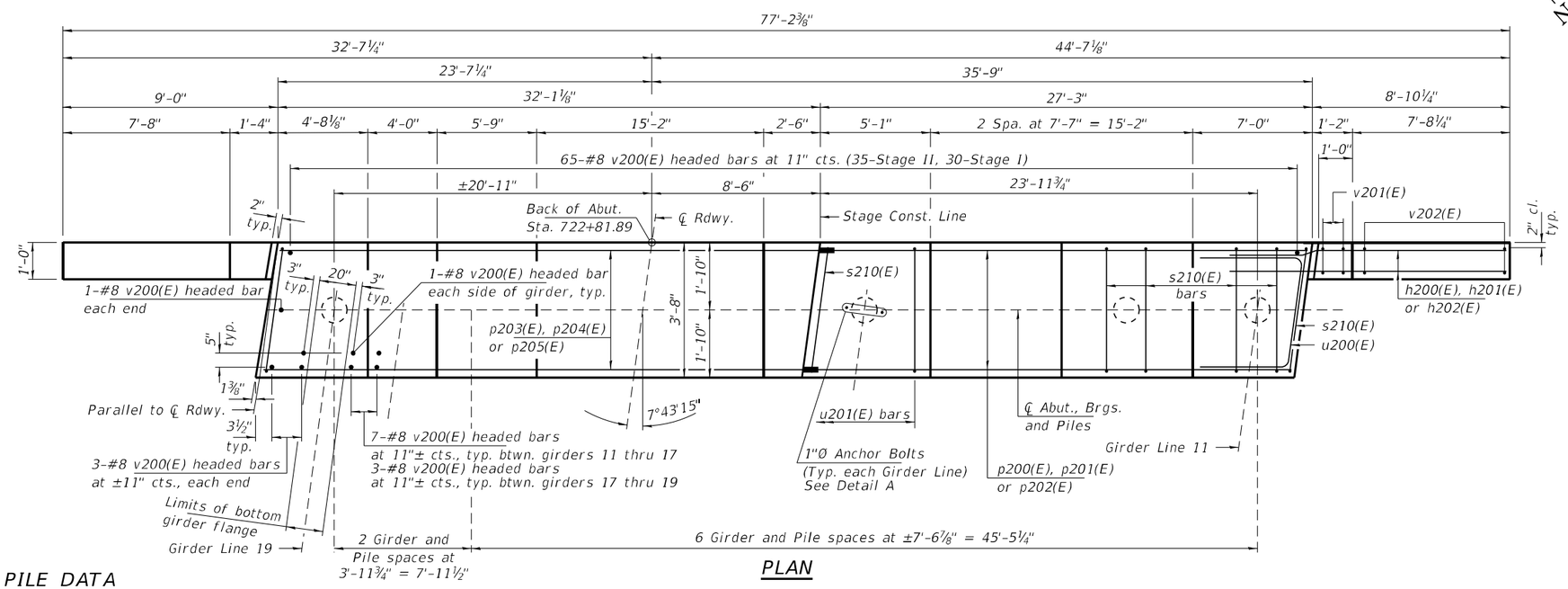

PLAN

PILE DATA

Type: Metal Shell Piles 16"x0.375"
Nominal Required Bearing: 545 Kips/Pile
Factored Resistance Available: 300 Kips/Pile
Est. Length: 60 Ft/Pile
No. Production Piles: 8
No. Test Piles: 1

Notes: One test pile shall be driven in a permanent location at the South Abutment.

Notes:
Pour steps monolithically with cap.
Space reinforcement in cap to miss anchor bolt locations.
Bar terminators, paid for separately, See Total Bill of Material.
For details of piles see sheet 65 of 70.
For Detail A and Reinforcement details see sheet 60 of 70.

BILL OF MATERIAL - S. ABUT. (E.B.)

BAR	NO.	SIZE	LENGTH	SHAPE
h200(E)	36	#6	12'-8"	
h201(E)	4	#5	17'-11"	
h202(E)	4	#5	9'-0"	
p200(E)	8	#7	26'-11"	
p201(E)	10	#5	26'-11"	
p202(E)	4	#5	5'-0"	
p203(E)	8	#7	31'-10"	
p204(E)	10	#5	31'-10"	
p205(E)	4	#5	17'-0"	
s210(E)	48	#6	14'-4"	
s211(E)	18	#5	4'-4"	
* sp(E)	9	#4	2'-0"	
u200(E)	8	#6	11'-11"	
u201(E)	16	#5	6'-8"	
v200(E)	139	#8	5'-11"	
v201(E)	8	#5	7'-7"	
v202(E)	16	#5	11'-7"	
Structure Excavation			Cu. Yd.	110
Concrete Structures			Cu. Yd.	34.2
Reinf. Bars, Epoxy Coated			Pound	6,660
Furn. Metal Shell Piles 16"x0.375"			Foot	480
Driving Piles			Foot	480
Test Pile Metal Shells			Each	1

* Length is height of spiral.

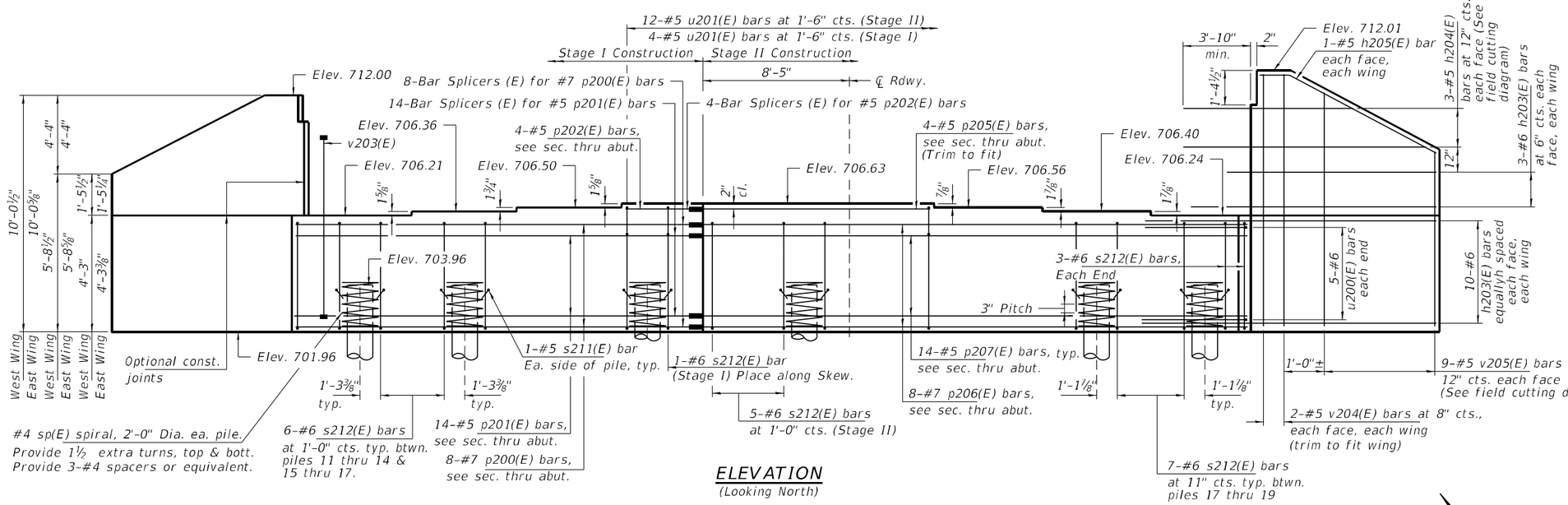

ELEVATION
(Looking North)

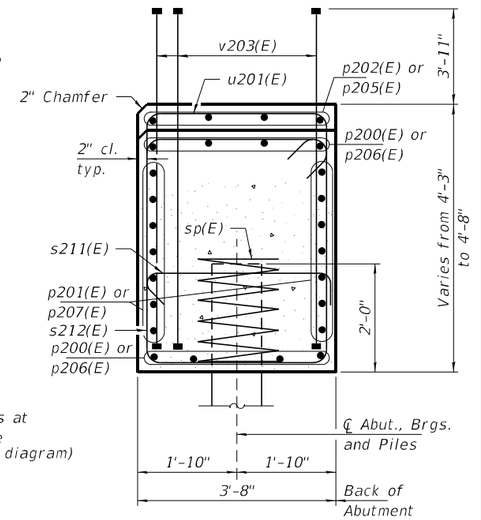

SEC. THRU ABUT.
Dimensions at Rt. ∠'s

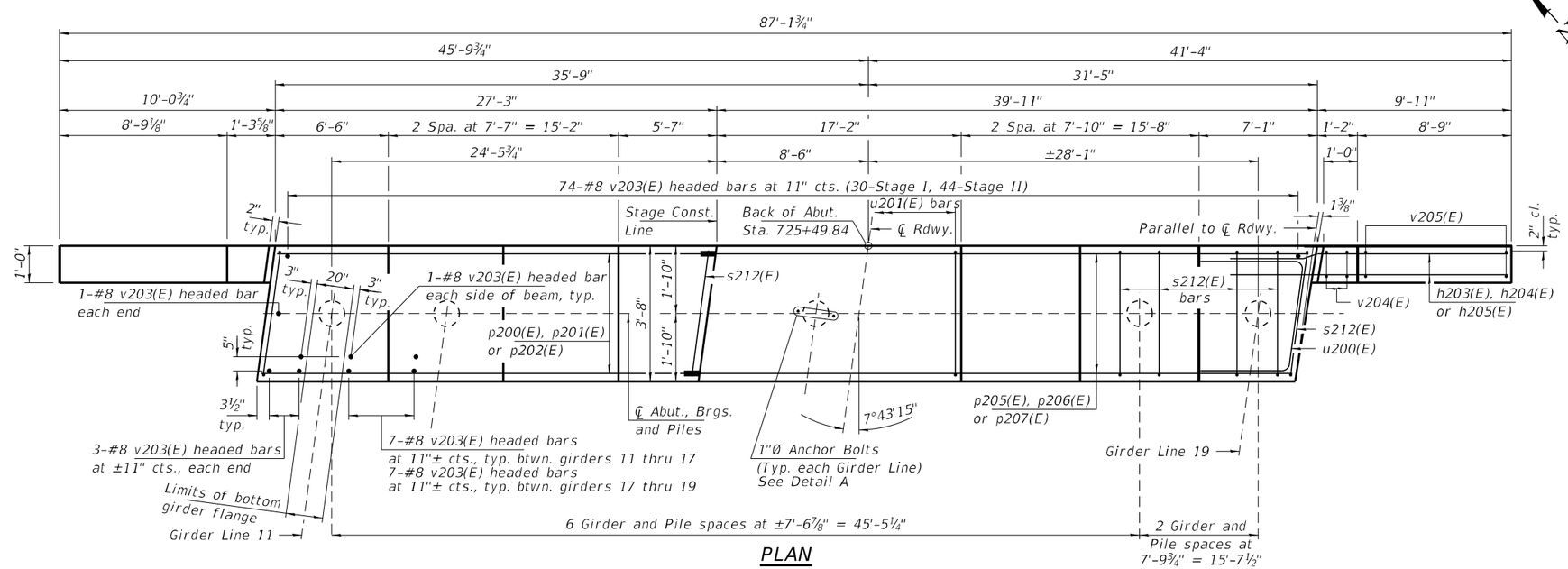

PLAN

BILL OF MATERIAL - N. ABUT. (E.B.)

	BAR	NO.	SIZE	LENGTH	SHAPE
	h203(E)	52	#6	13'-10"	
	h204(E)	6	#5	19'-9"	
	h205(E)	4	#5	10'-5"	
	p200(E)	8	#7	26'-11"	
	p201(E)	14	#5	26'-11"	
	p202(E)	4	#5	5'-0"	
	p205(E)	4	#5	17'-0"	
	p206(E)	8	#7	39'-6"	
	p207(E)	14	#5	39'-6"	
	s211(E)	18	#5	4'-4"	
	s212(E)	56	#6	15'-10"	
*	sp(E)	9	#4	2'-0"	
	u200(E)	10	#6	11'-11"	
	u201(E)	16	#5	6'-8"	
	v203(E)	156	#8	8'-3"	
	v204(E)	8	#5	9'-8"	
	v205(E)	18	#5	14'-9"	
	Structure Excavation			Cu. Yd.	195
	Concrete Structures			Cu. Yd.	46.1
	Reinf. Bars, Epoxy Coated			Pound	9,270
	Furn. Metal Shell Piles 16"x0.375"			Foot	840
	Driving Piles			Foot	840
	Test Pile Metal Shells			Each	1

* Length is height of spiral.

PILE DATA

Type: _____ Metal Shell Piles 16"x0.375"
Nominal Required Bearing: _____ 765 Kips/Pile
Factored Resistance Available: _____ 420 Kips/Pile
Est. Length: _____ 105 Ft/Pile
No. Production Piles: _____ 8
No. Test Piles: _____ 1

Notes: One test pile shall be driven in a permanent location at the North Abutment.

Notes:
Pour steps monolithically with cap.
Space reinforcement in cap to miss anchor bolt locations.
Bar terminators, paid for separately, See Total Bill of Material.
For details of piles see sheet 65 of 70.
For Detail A and Reinforcement details see sheet 60 of 70.

FILE NAME = 190501-sht-bridge.dgn	USER NAME = rhosick	DESIGNED - S.M.S.	REVISED -	STATE OF ILLINOIS DEPARTMENT OF TRANSPORTATION	NORTH ABUTMENT (E.B.) SN 058-0139(E.B.) & 058-0140(W.B.)	F.A.I.	SECTION	COUNTY	TOTAL SHEETS / SHEET NO.
HAMPTON, LENZINI AND RENWICK, INC. 3305 STEVENSON DRIVE, SUITE 201 SPRINGFIELD, ILLINOIS 62703 ILLINOIS PROFESSIONAL DESIGN FIRM LS / PE / SE CORP. 184.000959		CHECKED - S.W.M.	REVISED -			72	(58-63HVB)BR	MACON	122 / 99
	PLOT SCALE =	DRAWN - R.D.H.	REVISED -					CONTRACT NO. 74705	
	PLOT DATE = 8/21/2025	CHECKED - S.M.S.	REVISED -		SHEET NO. 59 OF 70 SHEETS			ILLINOIS FED. AID PROJECT	

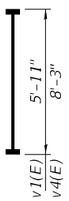

BAR v1(E) & v4(E)

(Headed 656-#8 Bar Terminators)

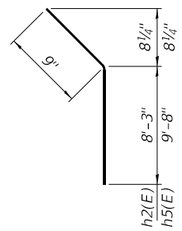

BAR h2(E) & h5(E)

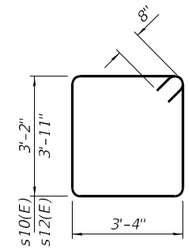

BAR s10(E) & s12(E)

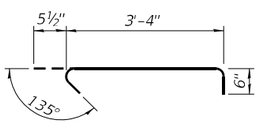

BAR s11(E)

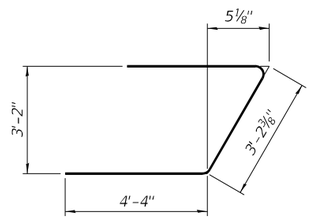

BAR u(E)

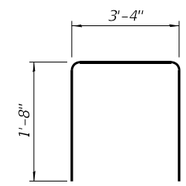

BAR u1(E)

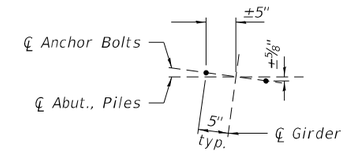

DETAIL A

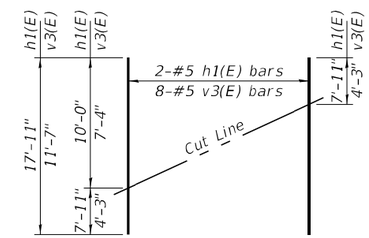

FIELD CUTTING DIAGRAM

Order h1(E) and v3(E) full length. Cut as shown and use remainder of bars in opposite face.

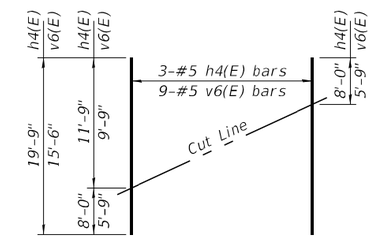

FIELD CUTTING DIAGRAM

Order h4(E) and v6(E) full length. Cut as shown and use remainder of bars in opposite face.

058-0140 (W.B.)

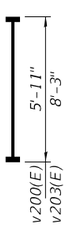

BAR v200(E) & v203(E)

(Headed 590-#8 Bar Terminators)

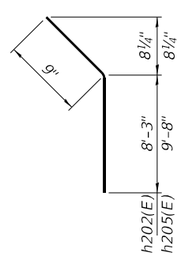

BAR h202(E) & h205(E)

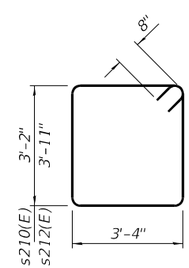

BAR s210(E) & s212(E)

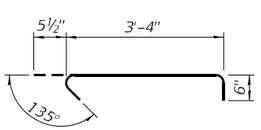

BAR s211(E)

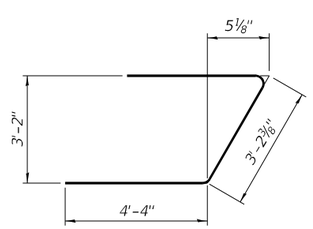

BAR u200(E)

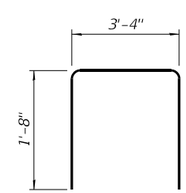

BAR u201(E)

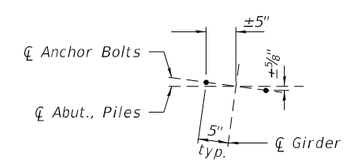

DETAIL A

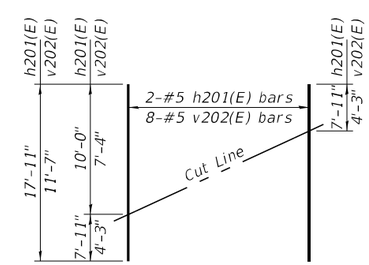

FIELD CUTTING DIAGRAM

Order h201(E) and v202(E) full length. Cut as shown and use remainder of bars in opposite face.

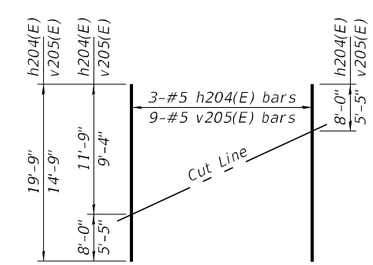

FIELD CUTTING DIAGRAM

Order h204(E) and v205(E) full length. Cut as shown and use remainder of bars in opposite face.

058-0139 (E.B.)

FILE NAME = 190501-sht-bridge.dgn	USER NAME = rhosick	DESIGNED - S.M.S.	REVISED -	STATE OF ILLINOIS DEPARTMENT OF TRANSPORTATION	ABUTMENT DETAILS SN 058-0139(E.B.) & 058-0140(W.B.)	F.A.I.	SECTION	COUNTY	TOTAL SHEETS / SHEET NO.
HAMPTON, LENZINI AND RENWICK, INC. 3085 STEVENSON DRIVE, SUITE 201 SPRINGFIELD, ILLINOIS 62703		CHECKED - S.W.M.	REVISED -			72	(58-63HVB)BR	MACON	122 / 100
ILLINOIS PROFESSIONAL DESIGN FIRM LS / PE / SE CORP. 184.000959	PLOT SCALE =	DRAWN - R.D.H.	REVISED -					CONTRACT NO. 74705	
	PLOT DATE = 8/21/2025	CHECKED - S.M.S.	REVISED -		SHEET NO. 60 OF 70 SHEETS			ILLINOIS FED. AID PROJECT	

Notes:
Space reinforcement in cap to miss anchor bolts.
Pour steps monolithically with cap.
E.F. denotes each face, E.E. denotess each end.
For pier cap reinforcement and bar splicers in the cap, see sheet 62 of 70.
See sheet 62 of 70 for Section A-A, B-B & C-C, bar details & Bill of Materials.
For details of piles, see sheet 65 of 70.
See sheet 66 of 70 for bar and mechanical splicer detail.
Concrete Sealer shall be applied to the roadside face, ends, and top of crashwall.

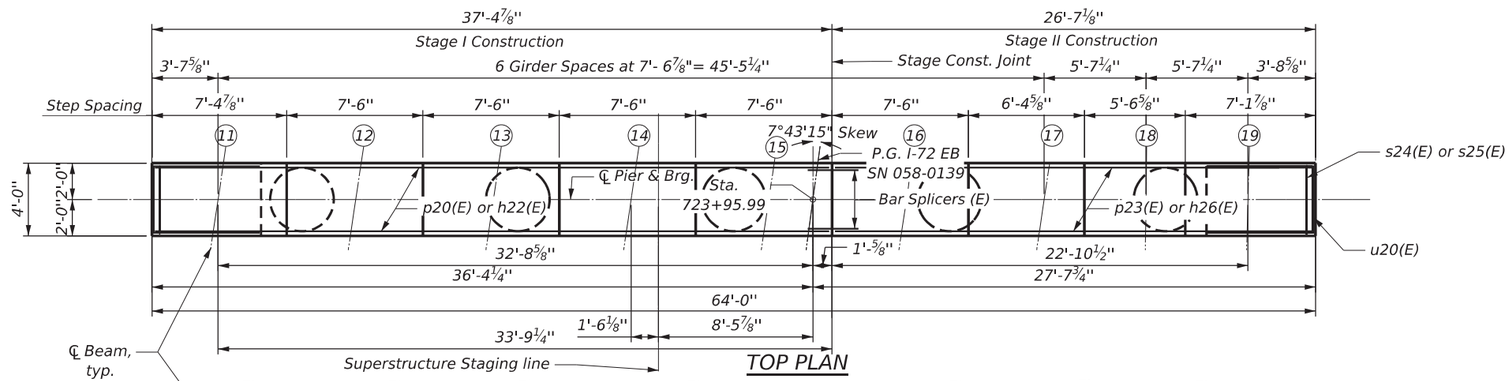

TOP PLAN

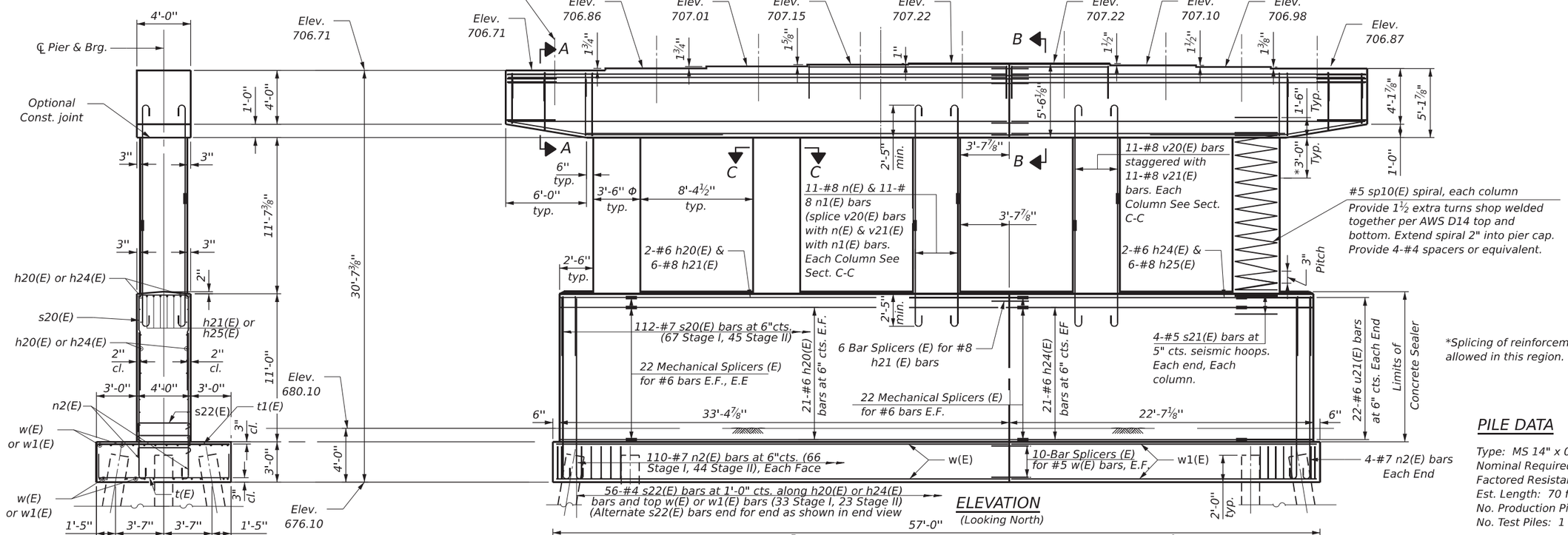

*Splicing of reinforcement will not be allowed in this region.

ELEVATION
(Looking North)

END VIEW

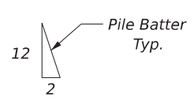

PILE DATA

Type: MS 14" x 0.312"
Nominal Required Bearing: 360 Kips
Factored Resistance Available: 198 Kips
Est. Length: 70 ft.
No. Production Piles: 41 Ea.
No. Test Piles: 1 Ea.

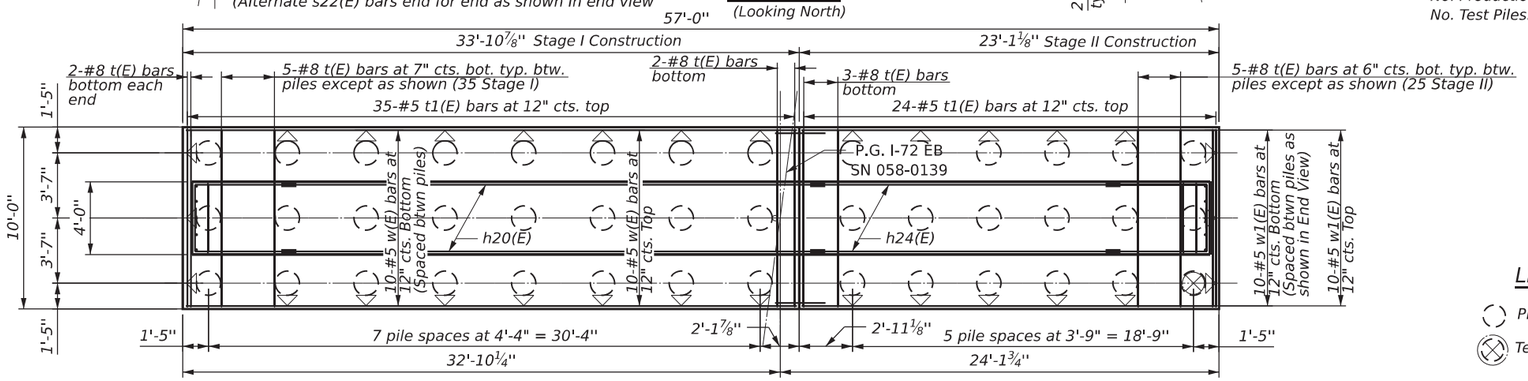

FOOTING PLAN

LEGEND

Proposed Metal Shell Pile
Test Pile

(Sheet 1 of 2)

MODEL: 01-Pier Plan and elevations 039
FILE NAME: C:\OneDrive\Greene & Bradford Inc\G&B - Projects\2021\21102.01 WO# 3 74705 PTB 201-037 Sub to HLR Effingham Phase I & II D7\IDOT\Structures\SN 058-0139 SquareCap 08-05.dgn

GREENE & BRADFORD, INC.
OF SPRINGFIELD
CONSULTING ENGINEERS
3501 CONSTITUTION DRIVE, SUITE A
SPRINGFIELD, ILLINOIS 62711
PROFESSIONAL DESIGN FIRM NO. 184-001179
(217) 753-8844, 753-8227 (F)

USER NAME = KashifSyed	DESIGNED - MAC	REVISED -	
	CHECKED - KAS	REVISED -	
PLOT SCALE =	DRAWN - SKC	REVISED -	
PLOT DATE = 8/21/2025	CHECKED - KAS	REVISED -	

STATE OF ILLINOIS
DEPARTMENT OF TRANSPORTATION

PIER PLAN AND ELEVATION
S. N. 058-0139 (E.B.)
SHEET 61 OF 70 SHEETS

F.A.I. RTE.	SECTION	COUNTY	TOTAL SHEETS	SHEET NO.
72	(58-63HVB)BR	MACON	122	101
		CONTRACT NO. 74705		
		ILLINOIS	FED. AID PROJECT	

8/21/2025 10:50:21 AM

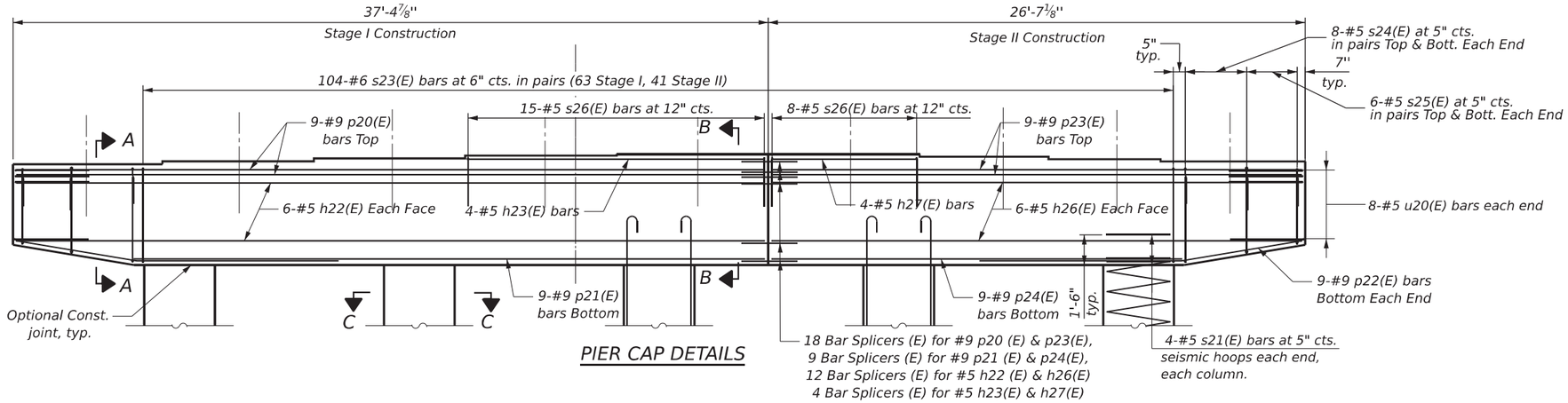

PIER CAP DETAILS

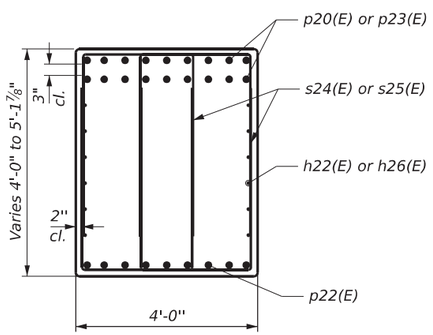

SEC. A-A

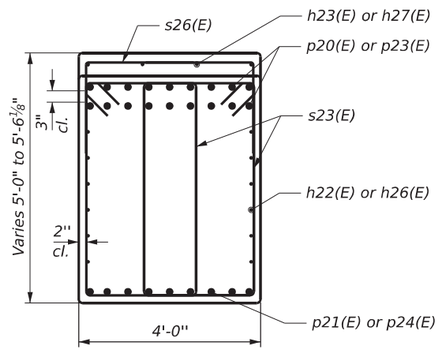

SEC. B-B

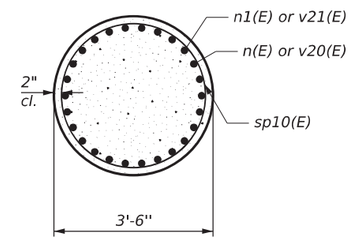

SEC. C-C

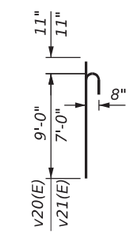

BARS v20(E) and v21(E)

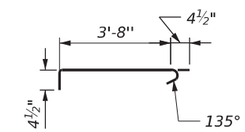

BAR s22(E)
(alternate end for end)

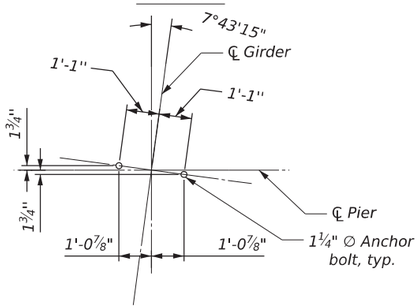

ANCHOR BOLT DETAIL FOR BEAM 11-17

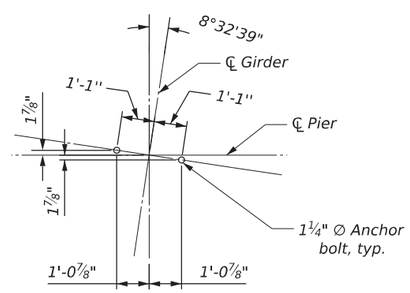

ANCHOR BOLT DETAIL FOR BEAM 18

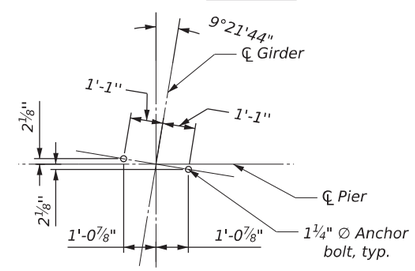

ANCHOR BOLT DETAIL FOR BEAM 19

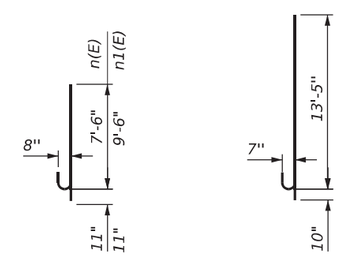

BARS n(E) & n1(E)

BAR n2(E)

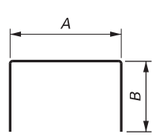

BARS s20(E), s24(E), s25(E), s26(E), u20(E), u21(E) and t(E)

A & B DIMENSIONS

Bar	A	B
s20(E)	3'-8"	4'-4"
s24(E)	2'-5"	4'-0"
s25(E)	2'-5"	3'-8"
s26(E)	3'-8"	2'-0"
u20(E)	3'-8"	3'-7"
u21(E)	3'-8"	5'-2"
t(E)	9'-6"	2'-6"

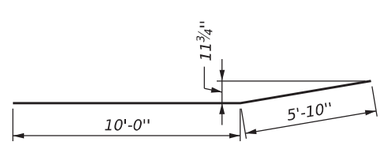

BAR p22(E)

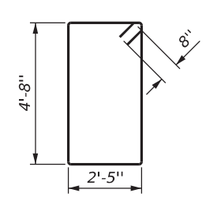

BAR s23(E)

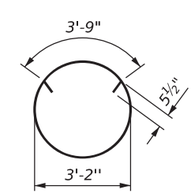

BAR s21(E)

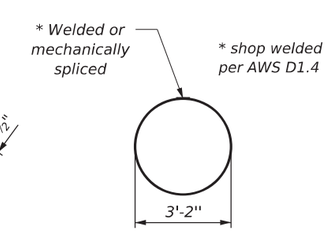

Alternative Seismic Hoop

BILL OF MATERIAL

Bar	No.	Size	Length	Shape
h20(E)	44	#6	29'-1"	
h21(E)	6	#8	33'-1"	
h22(E)	12	#5	37'-1"	
h23(E)	4	#5	14'-8"	
h24(E)	44	#6	16'-3"	
h25(E)	6	#8	22'-3"	
h26(E)	12	#5	26'-3"	
h27(E)	4	#5	7'-2"	
n(E)	55	#8	8'-5"	
n1(E)	55	#8	10'-5"	
n2(E)	228	#7	14'-3"	
p20(E)	18	#9	37'-1"	
p21(E)	9	#9	31'-1"	
p22(E)	18	#9	15'-10"	
p23(E)	18	#9	26'-3"	
p24(E)	9	#9	20'-3"	
s20(E)	112	#7	12'-4"	
s21(E)	40	#5	14'-8"	
s22(E)	1288	#4	4'-5"	
s23(E)	208	#6	15'-6"	
s24(E)	64	#5	10'-5"	
s25(E)	48	#5	9'-9"	
s26(E)	23	#5	7'-8"	
** sp10(E)	5	#5	12'-0"	
t(E)	69	#8	14'-6"	
t1(E)	59	#5	9'-6"	
u20(E)	16	#5	10'-10"	
u21(E)	44	#6	14'-0"	
v20(E)	55	#8	9'-11"	
v21(E)	55	#8	7'-11"	
w(E)	20	#5	33'-5"	
w1(E)	20	#5	22'-7"	
Structure Excavation	Cu. Yd.	85		
Concrete Structures	Cu. Yd.	292.7		
Concrete Sealer	Sq. Ft.	878		
Reinforcement Bars, Epoxy Coated	Pound	44650		
Furnishing Metal Shell Piles 14" x 0.312"	Foot	2870		
Driving Piles	Foot	2870		
Test Pile Metal Shells	Each	1		

** Length is height of spiral.

(Sheet 2 of 2)

MODEL: 02-Pier Cap details 039
FILE NAME: C:\OneDrive\Greene & Bradford Inc\G&B - Projects\2021\21102.01 WO# 3 74705 PTB 201-037 Sub to HLR Effingham Phase I & II D7\IDOT\Structures\SN 058-0139 SquareCap 08-05.dgn

GREENE & BRADFORD, INC.
OF SPRINGFIELD
CONSULTING ENGINEERS
3301 CONSTITUTION DRIVE, SUITE A
SPRINGFIELD, ILLINOIS 62711
PROFESSIONAL DESIGN FIRM NO. 184-001179
(217) 793-0994, 793-6027 (F)

USER NAME = KashifSyed	DESIGNED - MAC	REVISED -	
	CHECKED - KAS	REVISED -	
PLOT SCALE =	DRAWN - SKC	REVISED -	
PLOT DATE = 8/21/2025	CHECKED - KAS	REVISED -	

STATE OF ILLINOIS
DEPARTMENT OF TRANSPORTATION

PIER DETAILS
S. N. 058-0139 (E.B.)
SHEET 62 OF 70 SHEETS

F.A.I. RTE.	SECTION	COUNTY	TOTAL SHEETS	SHEET NO.
72	(58-63HVB)BR	MACON	122	102

CONTRACT NO. 74705
ILLINOIS FED. AID PROJECT

8/21/2025 10:50:24 AM

Notes:
Space reinforcement in cap to miss anchor bolts.
Pour steps monolithically with cap.
E.F. denotes each face, E.E. denotess each end.
For pier cap reinforcement and bar splicers in the cap, see sheet 64 of 70.
See sheet 64 of 70 for Section A-A, B-B & C-C, bar details & Bill of Materials
For details of piles, see sheet 65 of 70.
See sheet 66 of 70 for bar and mechanical splicer detail.
Concrete Sealer shall be applied to the roadside face, ends and top of crashwall.

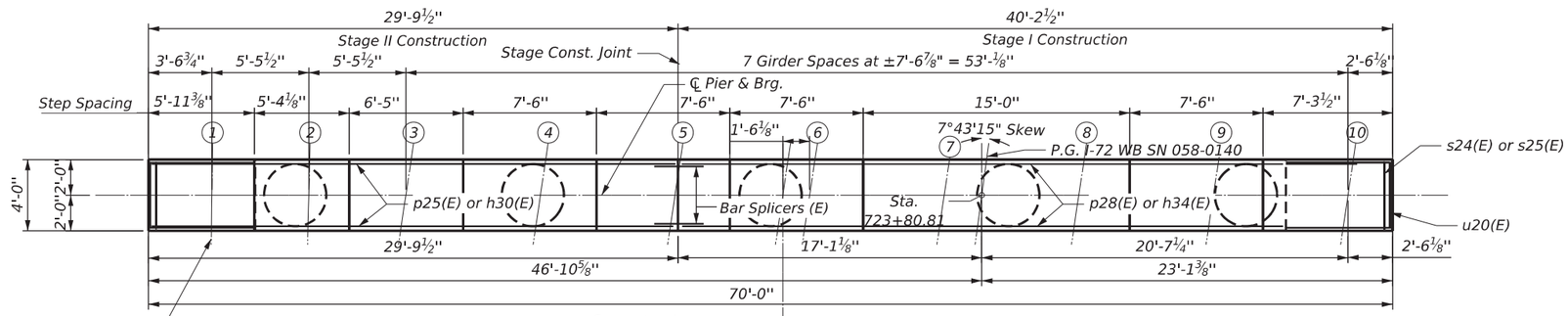

TOP PLAN

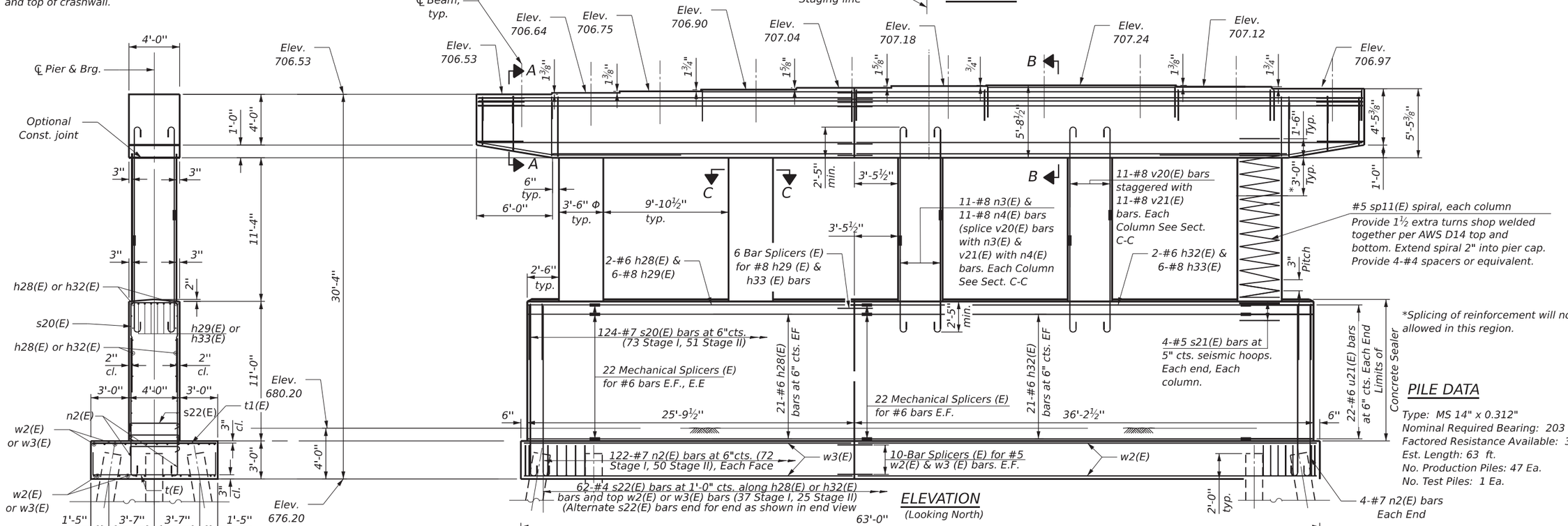

ELEVATION
(Looking North)

END VIEW

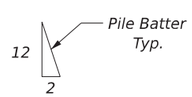

PILE DATA

Type: MS 14" x 0.312"
Nominal Required Bearing: 203 Kips
Factored Resistance Available: 368 Kips
Est. Length: 63 ft.
No. Production Piles: 47 Ea.
No. Test Piles: 1 Ea.

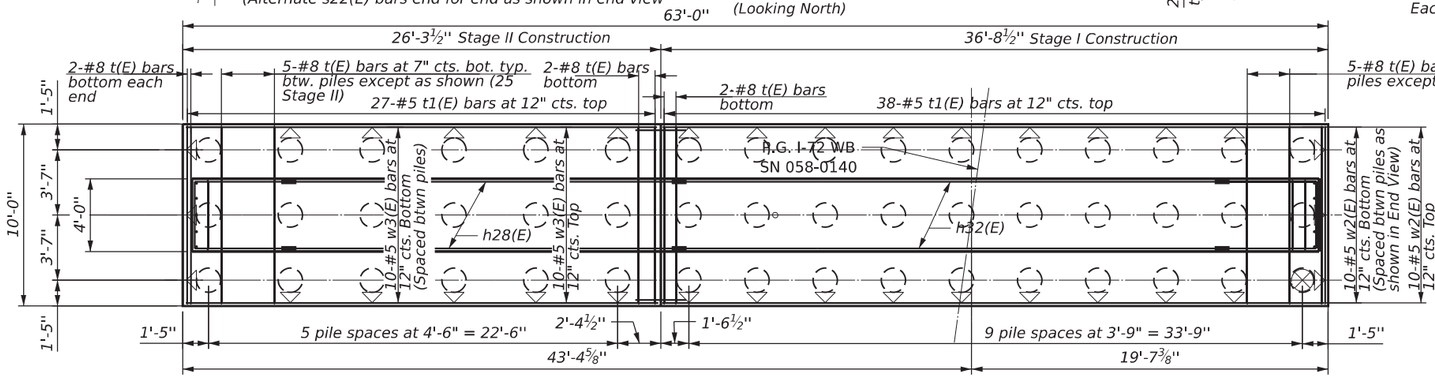

FOOTING PLAN

LEGEND

Proposed Metal Shell Pile
Test Pile

(Sheet 1 of 1)

MODEL: 04-Pier Plan and elevations 040
FILE NAME: C:\OneDrive\Greene & Bradford Inc\G&B - Projects\2021\21102.01 WO# 3 74705 PTB 201-037 Sub to HLR Effingham Phase I & II DYIDOT\Structures\SN 058-0140 SquareCap 08-05.dgn

9/2/2025 12:05:02 PM

GREENE & BRADFORD, INC. OF SPRINGFIELD
CONSULTING ENGINEERS
2601 CONSTITUTION DRIVE
SPRINGFIELD, ILLINOIS 62711
PROFESSIONAL DESIGN FIRM NO. 184-001179
PROFESSIONAL LAND SURVEYING FIRM NO. 0494-000368
(217) 753-8414, (184-007 P.)

USER NAME = KashifSyed	DESIGNED - MAC	REVISED -	
	CHECKED - KAS	REVISED -	
PLOT SCALE =	DRAWN - SKC	REVISED -	
PLOT DATE = 9/2/2025	CHECKED - KAS	REVISED -	

STATE OF ILLINOIS
DEPARTMENT OF TRANSPORTATION

PIER PLAN AND ELEVATION
S. N. 058-0140 (W.B.)
SHEET 63 OF 70 SHEETS

F.A.I. RTE.	SECTION	COUNTY	TOTAL SHEETS	SHEET NO.
72	(58-63HVB)BR	MACON	122	103
		CONTRACT NO. 74705		
		ILLINOIS	FED. AID PROJECT	

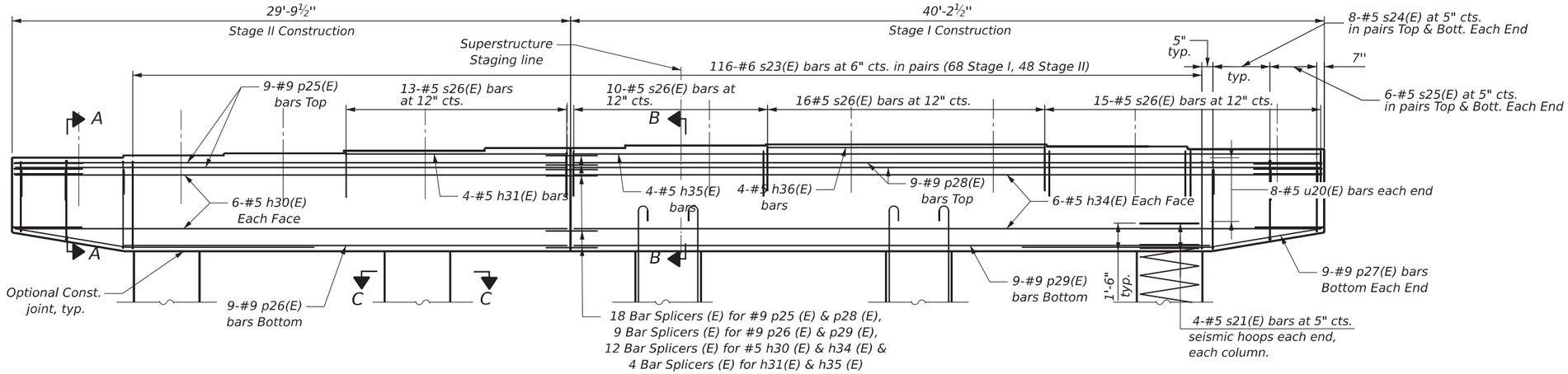

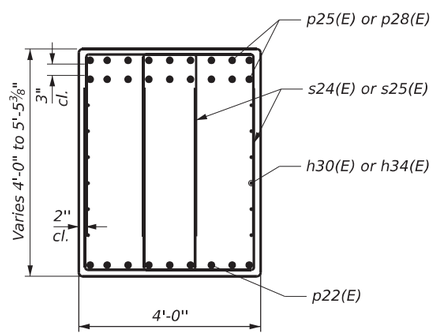

SEC. A-A

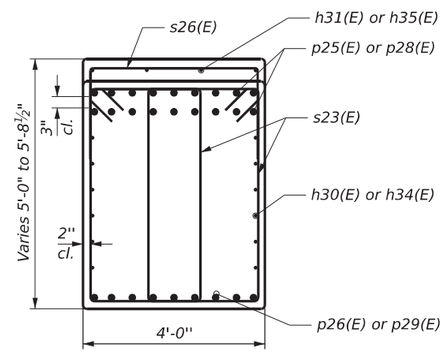

SEC. B-B

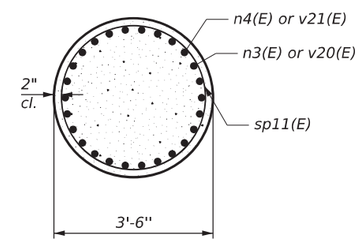

SEC. C-C

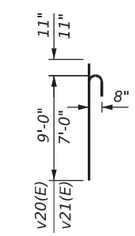

BARS v20(E) and v21(E)

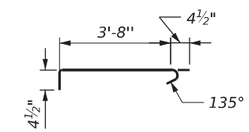

BAR s22(E)
(alternate end for end)

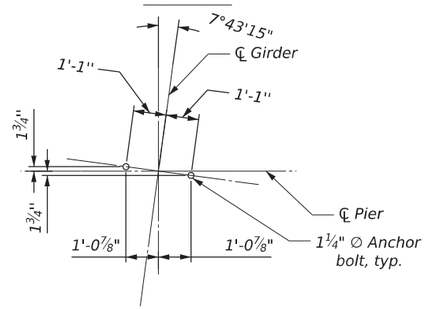

ANCHOR BOLT DETAIL FOR BEAM 3-10

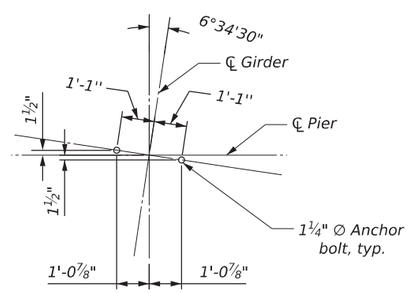

ANCHOR BOLT DETAIL FOR BEAM 1

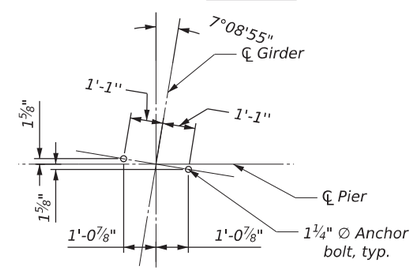

ANCHOR BOLT DETAIL FOR BEAM 2

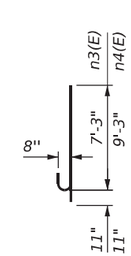

BARS n3(E) & n4(E)

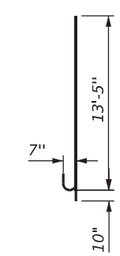

BAR n2(E)

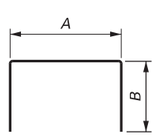

BARS s20(E), s24(E), s25(E), s26(E), u20(E), u21(E) and t(E)

A & B DIMENSIONS

Bar	A	B
s20(E)	3'-8"	4'-4"
s24(E)	2'-5"	4'-0"
s25(E)	2'-5"	3'-8"
s26(E)	3'-8"	2'-0"
u20(E)	3'-8"	3'-7"
u21(E)	3'-8"	5'-2"
t(E)	9'-6"	2'-6"

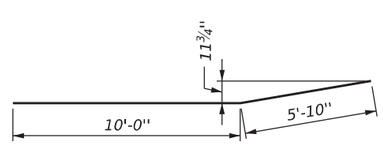

BAR p22(E)

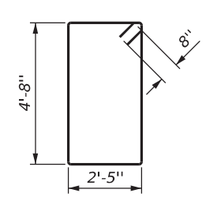

BAR s23(E)

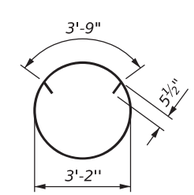

BAR s21(E)

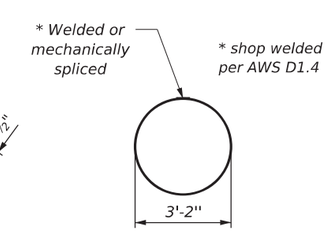

Alternative Seismic Hoop

BILL OF MATERIAL

Bar	No.	Size	Length	Shape
h28(E)	44	#6	21'-5"	
h29(E)	6	#8	25'-5"	
h30(E)	12	#5	29'-5"	
h31(E)	4	#5	11'-9"	
h32(E)	44	#6	29'-10"	
h33(E)	6	#8	35'-10"	
h34(E)	12	#5	39'-10"	
h35(E)	4	#5	39'-10"	
h36(E)	4	#5	14'-8"	
n2(E)	252	#7	14'-3"	
n3(E)	55	#8	8'-2"	
n4(E)	55	#8	10'-2"	
p22(E)	18	#9	15'-10"	
p25(E)	18	#9	29'-5"	
p26(E)	9	#9	23'-5"	
p28(E)	18	#9	39'-10"	
p29(E)	9	#9	33'-10"	
s20(E)	124	#7	12'-4"	
s21(E)	40	#5	14'-7"	
s22(E)	1426	#4	4'-5"	
s23(E)	232	#6	15'-6"	
s24(E)	64	#5	10'-5"	
s25(E)	48	#5	9'-9"	
s26(E)	41	#5	7'-8"	
** sp11(E)	5	#5	11'-0"	
t(E)	78	#8	14'-6"	
t1(E)	65	#5	9'-6"	
u20(E)	16	#5	10'-10"	
u21(E)	44	#6	14'-0"	
v20(E)	55	#8	9'-11"	
v21(E)	55	#8	7'-11"	
w2(E)	20	#5	36'-2"	
w3(E)	20	#5	25'-9"	
Structure Excavation			Cu. Yd.	95
Concrete Structures			Cu. Yd.	306.4
Concrete Sealer			Sq. Ft.	970
Reinforcement Bars, Epoxy Coated			Pound	48170
Furnishing Metal Shell Piles 14" x 0.312"			Foot	2961
Driving Piles			Foot	2961
Test Pile Metal Shells			Each	1

** Length is height of spiral.

(Sheet 2 of 2)

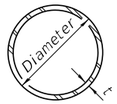

METAL SHELL PILE TABLE

Designation and outside diameter	Wall thickness t	Weight per foot (Lbs./ft.)	Inside volume (yd.³/ft.)
PP12	0.250"	31.40	0.0267
PP14	0.250"	36.75	0.0368
PP14	0.312"	45.65	0.0361
PP16	0.312"	52.32	0.0478
PP16	0.375"	62.64	0.0470

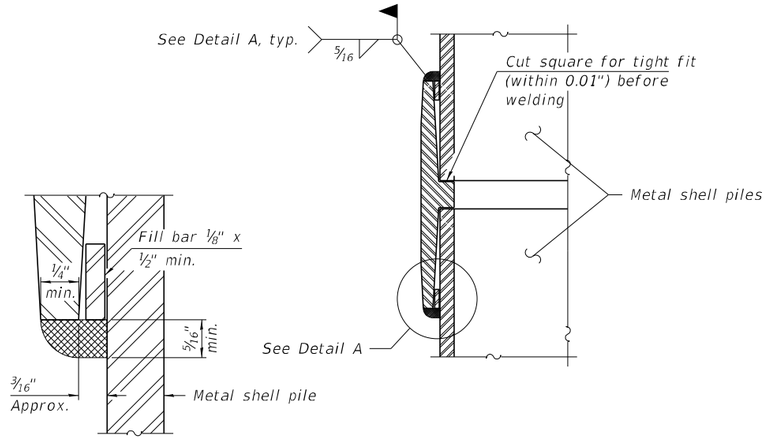

DETAIL A

WELDED COMMERCIAL SPLICE

Notes:
The 1/8" x 1/2" min. fill bar may be constructed of 2 bars with a 1/8" max. gap between them.
Pile segments shall be driven to solid contact with splicer before welding.

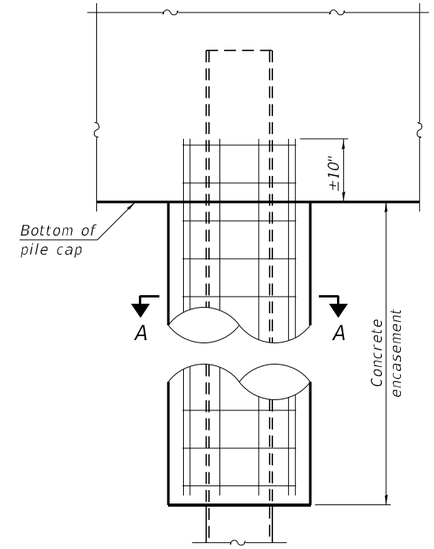

ELEVATION

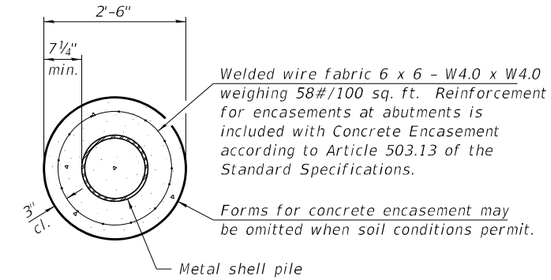

SECTION A-A

INDIVIDUAL PILE CONCRETE ENCASEMENT

(When specified)

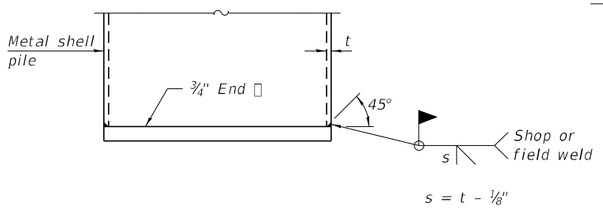

END PLATE ATTACHMENT

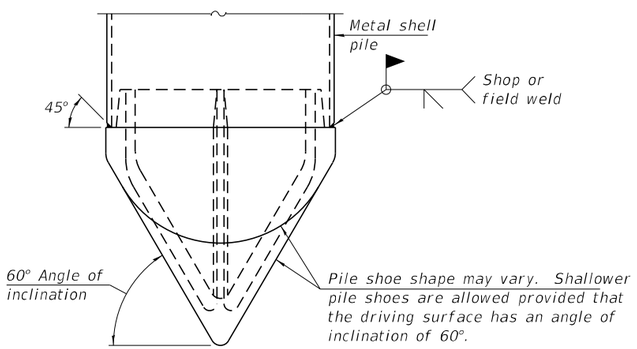

PILE SHOE ATTACHMENT

(When called for on the plans, the Contractor shall furnish metal shell pile shoes consisting of a single piece conical pile point as shown. The pile shoes shall be cast in one piece steel according to either ASTM A 148 Grade 80-50 or AASHTO M 103 Grade 65-35 and shall provide full bearing over the full circumference of the metal shell pile. The pile shoe shall have tapered leads to assure proper alignment and fitting and shall be secured to the pile with a circumferential weld).

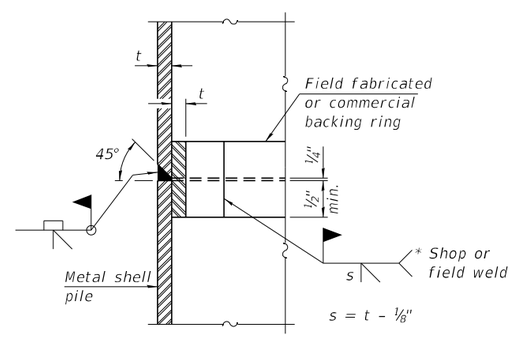

COMPLETE PENETRATION WELD SPLICE

* Field fabricated backing ring may be made from pile shell by removing segment to allow reducing circumference and vertically rejoin with partial joint penetration weld.

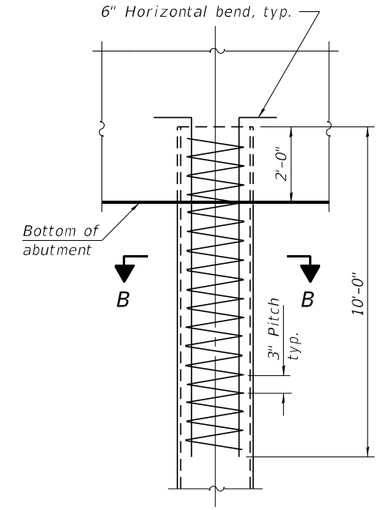

ELEVATION

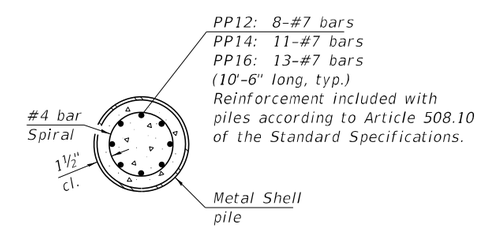

SECTION B-B

REINFORCEMENT AT ABUTMENTS

(Omit when concrete encasement is specified)

Note:
The metal shell piles shall be according to Article 1006.05 of the Standard Specifications.

F-MS 4-4-2025

FILE NAME = 190501-sht-bridge.dgn	USER NAME = rhosick	DESIGNED - S.M.S.	REVISED -	STATE OF ILLINOIS DEPARTMENT OF TRANSPORTATION	METAL SHELL PILE DETAILS SN 058-0139(E.B.) & 058-0140(W.B.)	F.A.I.	SECTION	COUNTY	TOTAL SHEETS / SHEET NO.
HAMPTON, LENZINI AND RENWICK, INC. 3585 STEVENSON DRIVE, SUITE 201 SPRINGFIELD, ILLINOIS 62703		CHECKED - S.W.M.	REVISED -			72	(58-63HVB)BR	MACON	122 / 105
ILLINOIS PROFESSIONAL DESIGN FIRM LS / PE / SE CORP. 184.000959	PLOT SCALE =	DRAWN - R.D.H.	REVISED -					CONTRACT NO. 74705	
	PLOT DATE = 8/21/2025	CHECKED - S.M.S.	REVISED -		SHEET NO. 65 OF 70 SHEETS		ILLINOIS FED. AID PROJECT		

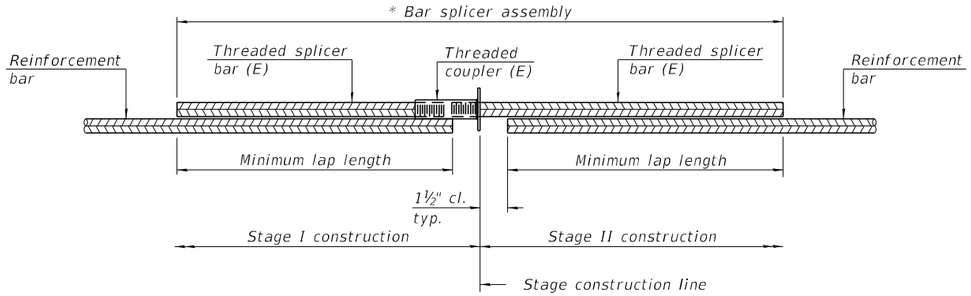

STANDARD BAR SPLICER ASSEMBLY PLAN

Only bar splicer assemblies as presented on the approved QPL list may be used.

Threaded splicer bar length = min. lap length + 1½" + thread length

* Epoxy not required on Bar Splicer Assembly components used in conjunction with black bars.

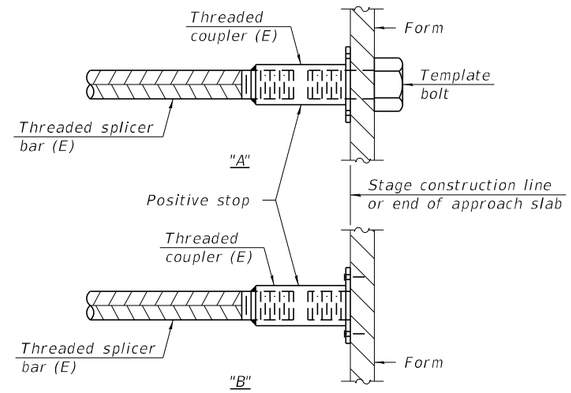

INSTALLATION AND SETTING METHODS

"A" : Set bar splicer assembly by means of a template bolt.
"B" : Set bar splicer assembly by nailing to wood forms or cementing to steel forms.
(E) : Indicates epoxy coating.

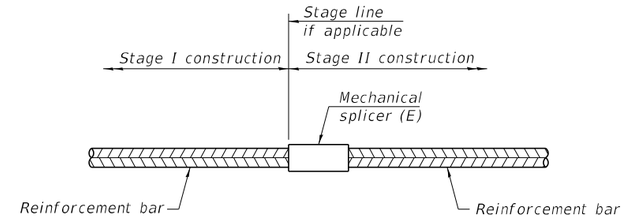

STANDARD MECHANICAL SPLICER

SN 058-0139 (E.B.)

Location	Bar size	No. assemblies required
Pier Crash Wall	#6	132
Pier Column	#8	110
Subtotal Mechanical Splicers =		242

SN 058-0140 (W.B.)

Location	Bar size	No. assemblies required
Pier Crash Wall	#6	132
Pier Column	#8	110
Subtotal Mechanical Splicers =		242

SN 058-0139 (E.B.)

Location	Bar size	No. required Superstructure	No. required Substructure	Minimum lap length
S. Appr. Pvt. (Conc. Overlay) Top	#4	15	-	2'-2"
S. Appr. Pvt. (Conc. Overlay) Top	#5	16	-	3'-6"
S. Appr. Pvt. (Footing) Top & Bott.	#5	-	40	3'-6"
N. Appr. Pvt. (Conc. Overlay) Top	#4	15	-	2'-2"
N. Appr. Pvt. (Conc. Overlay) Top	#5	16	-	3'-6"
N. Appr. Pvt. (Footing) Top & Bott.	#5	-	40	3'-6"
Superstructure (Top of Slab)	#5	581	-	3'-6"
Superstructure (Bott. of Slab)	#5	356	-	3'-6"
S. Diaphragm (Back Face)	#6	5	-	4'-10"
N. Diaphragm (Back Face)	#6	6	-	4'-10"
S. Abutment Cap	#5	-	14	3'-7"
S. Abutment Cap	#7	-	8	6'-0"
N. Abutment Cap	#5	-	18	3'-7"
N. Abutment Cap	#7	-	8	6'-0"
Pier Cap	#5	-	16	3'-7"
Pier Cap	#9	-	27	10'-0"
Pier Crash Wall	#8	-	6	5'-6"
Pier Footing	#5	-	20	3'-7"
Subtotal Bar Splicers =		1,010	197	

SN 058-0140 (W.B.)

Location	Bar size	No. required Superstructure	No. required Substructure	Minimum lap length
S. Appr. Pvt. (Conc. Overlay) Top	#4	15	-	2'-2"
S. Appr. Pvt. (Conc. Overlay) Top	#5	16	-	3'-6"
S. Appr. Pvt. (Footing) Top & Bott.	#5	-	40	3'-6"
N. Appr. Pvt. (Conc. Overlay) Top	#4	15	-	2'-2"
N. Appr. Pvt. (Conc. Overlay) Top	#5	16	-	3'-6"
N. Appr. Pvt. (Footing) Top & Bott.	#5	-	40	3'-6"
Superstructure (Top of Slab)	#5	580	-	3'-6"
Superstructure (Bott. of Slab)	#5	355	-	3'-6"
S. Diaphragm (Back Face)	#6	5	-	4'-10"
N. Diaphragm (Back Face)	#6	6	-	4'-10"
S. Abutment Cap	#5	-	14	3'-7"
S. Abutment Cap	#7	-	8	6'-0"
N. Abutment Cap	#5	-	18	3'-7"
N. Abutment Cap	#7	-	8	6'-0"
Pier Cap	#5	-	16	3'-7"
Pier Cap	#9	-	27	10'-0"
Pier Crash Wall	#8	-	6	5'-6"
Pier Footing	#5	-	20	3'-7"
Subtotal Bar Splicers =		1,008	197	

Notes:
Splicer bars shall be deformed with threaded ends and have a minimum 60 ksi yield strength.
All reinforcement shall be lapped and tied to the splicer bars.
Bar splicer assemblies shall be epoxy coated according to the requirements for reinforcement bars. See Section 508 of the Standard Specifications.
See approved list of bar splicer assemblies and mechanical splicers for alternatives.

BSD-1 4-4-2025

Illinois Department of Transportation
Division of Highways
IDOT D7

SOIL BORING LOG

Page 1 of 3

Date 7/6/21

ROUTE FAI 72 (I-72) DESCRIPTION I-72 over IL 121 and CN/ICC Railroad LOGGED BY E. Sandschafer

SECTION (58-63HVB)BR LOCATION SW 1/4, SEC. 29, TWP. 17N, RNG. 2E, 3rd PM.
Latitude N 39.894004, Longitude W 89.007421

COUNTY Macon DRILLING METHOD Hollow stem auger & split spoon HAMMER Auto ETR = 91.8% @ 57.4 bpm

STRUCT. NO. 058-0074,-0075 (E) 058-0139,-0140 (P)
Station 724+45.63

BORING NO. 1 - West Abutment
Station 722+38
Offset 0.0 ft Centerline
Ground Surface Elev. 710.78 ft

Surface Water Elev. NA ft
Stream Bed Elev. NA ft

Groundwater Elev.:
First Encounter 666.3 ft ▼
Upon Completion Washed ft
After 24 Hrs. 700.8 ft ▽

Description	Elev.	DEPTH (ft)	BLOWS (/6")	UCS Qu (tsf)	MOIST (%)
Brown, CLAY	708.78				
Very stiff, moist, brown, CLAY LOAM Till (Embankment)			4 5 7	3.1 B	9
Brown/grey		-5	3 3 7	3.1 B	10
Hard, moist, grey, CLAY Till (Embankment)	703.78		3 3 6	4.5 B	12
Medium, moist, grey, SANDY CLAY (Embankment)	701.28	-10	3 5 4	0.8 B	11
Stiff, moist, grey, CLAY (Embankment) *Broken, reassembled*	698.78		3 5 7	1.2 B	13
		-15	2 4 4	1.8 B	11
			2 3 4	1.8 B	11
	691.28				
	690.78	-20	4		
Very stiff, moist, grey, CLAY LOAM Till (Embankment)	688.78		5 6	2.5 B	11
Hard, moist, grey, CLAY Till (Embankment)			4 6 8	5.8 B	10
Very stiff		-25	3 4 5	2.5 B	11
			2 5 6	3.0 P	11
	681.28				
Very stiff, moist, grey, CLAY		-30	3 6 10	2.7 B	18
Stiff, brown		-35	1 3 3	1.2 B	15
	671.28				
Hard, moist, brown, CLAY Till	670.78	-40	3		

The Unconfined Compressive Strength (UCS) Failure Mode is indicated by (B-Bulge, S-Shear, P-Penetrometer, E-Estimated)
The SPT (N value) is the sum of the last two blow values in each sampling zone (AASHTO T206), WH-Weight of Hammer.
BBS, form 137 (Rev. 8-99)

SOIL BORING_058-0074,-0075 SOIL_2021.GPJ IL_DOT.GDT 7/29/21

Illinois Department of Transportation
Division of Highways
IDOT D7

SOIL BORING LOG

Page 2 of 3

Date 7/6/21

ROUTE FAI 72 (I-72) DESCRIPTION I-72 over IL 121 and CN/ICC Railroad LOGGED BY E. Sandschafer

SECTION (58-63HVB)BR LOCATION SW 1/4, SEC. 29, TWP. 17N, RNG. 2E, 3rd PM.
Latitude N 39.894004, Longitude W 89.007421

COUNTY Macon DRILLING METHOD Hollow stem auger & split spoon HAMMER Auto ETR = 91.8% @ 57.4 bpm

STRUCT. NO. 058-0074,-0075 (E) 058-0139,-0140 (P)
Station 724+45.63

BORING NO. 1 - West Abutment
Station 722+38
Offset 0.0 ft Centerline
Ground Surface Elev. 710.78 ft

Surface Water Elev. NA ft
Stream Bed Elev. NA ft

Groundwater Elev.:
First Encounter 666.3 ft ▼
Upon Completion Washed ft
After 24 Hrs. 700.8 ft ▽

Description	Elev.	DEPTH (ft)	BLOWS (/6")	UCS Qu (tsf)	MOIST (%)
Hard, moist, brown, CLAY Till			8 12	4.1 B	12
Very stiff, grey		-45	2 4 8	3.9 B	11
		-50	2 4 8	2.7 B	13
	656.28				
Very stiff, moist, grey, SILTY CLAY		-55	2 5 7	2.7 B	15
	651.28				
	650.78	-60	3		
Very stiff, moist, grey, SANDY SILT			10 13	2.6 S	22
		-65	7 13 14	3.9 S	20
	641.28				
Very stiff, moist, grey, CLAY Till		-70	4 7 11	3.5 B	11
	636.28				
Medium, moist, grey, LOAM		-75	2 3 4	0.6 B	14
	631.28				
	630.78	-80	2		

The Unconfined Compressive Strength (UCS) Failure Mode is indicated by (B-Bulge, S-Shear, P-Penetrometer, E-Estimated)
The SPT (N value) is the sum of the last two blow values in each sampling zone (AASHTO T206), WH-Weight of Hammer.
BBS, form 137 (Rev. 8-99)

SOIL BORING_058-0074,-0075 SOIL_2021.GPJ IL_DOT.GDT 7/29/21

Illinois Department of Transportation
Division of Highways
IDOT D7

SOIL BORING LOG

Page 3 of 3

Date 7/6/21

ROUTE FAI 72 (I-72) DESCRIPTION I-72 over IL 121 and CN/ICC Railroad LOGGED BY E. Sandschafer

SECTION (58-63HVB)BR LOCATION SW 1/4, SEC. 29, TWP. 17N, RNG. 2E, 3rd PM.
Latitude N 39.894004, Longitude W 89.007421

COUNTY Macon DRILLING METHOD Hollow stem auger & split spoon HAMMER Auto ETR = 91.8% @ 57.4 bpm

STRUCT. NO. 058-0074,-0075 (E) 058-0139,-0140 (P)
Station 724+45.63

BORING NO. 1 - West Abutment
Station 722+38
Offset 0.0 ft Centerline
Ground Surface Elev. 710.78 ft

Surface Water Elev. NA ft
Stream Bed Elev. NA ft

Groundwater Elev.:
First Encounter 666.3 ft ▼
Upon Completion Washed ft
After 24 Hrs. 700.8 ft ▽

Description	Elev.	DEPTH (ft)	BLOWS (/6")	UCS Qu (tsf)	MOIST (%)
Hard, moist, grey, CLAY LOAM Till	626.28		5 6	4.1 B	11
Stiff, moist, grey, CLAY LOAM		-85	1 1 4	1.8 B	13
Medium		-90	3 4 4	0.6 B	14
	616.28				
Very stiff, moist, grey, CLAY Till	614.78	-95	9 12 18	3.9 B	9
Benchmark: DEC MAINT AZ - Brass disk set in concrete at Sta. 909+40, 115' LT. End of Boring		-100			

The Unconfined Compressive Strength (UCS) Failure Mode is indicated by (B-Bulge, S-Shear, P-Penetrometer, E-Estimated)
The SPT (N value) is the sum of the last two blow values in each sampling zone (AASHTO T206), WH-Weight of Hammer.
BBS, form 137 (Rev. 8-99)

SOIL BORING_058-0074,-0075 SOIL_2021.GPJ IL_DOT.GDT 7/29/21

BORING 1

Illinois Department of Transportation
Division of Highways
IDOT D7

SOIL BORING LOG

Page 1 of 3

Date 5/24/21

ROUTE FAI 72 (I-72) DESCRIPTION I-72 over IL 121 and CN/ICC Railroad LOGGED BY E. Sandschafer

SECTION (58-63HVB)BR LOCATION SW 1/4, SEC. 29, TWP. 17N, RNG. 2E, 3rd PM
Latitude N 39.894423, Longitude W 89.007250

COUNTY Macon DRILLING METHOD Hollow stem auger & split spoon HAMMER Auto ETR = 91.8% @ 57.4 bpm

STRUCT. NO. 058-0074,-0075 (E) 058-0139,-0140 (P)
Station 724+45.63

BORING NO. 2 - Pier 1
Station 724+09
Offset 118.0 ft LT
Ground Surface Elev. 683.26 ft

Surface Water Elev. NA ft
Stream Bed Elev. NA ft

Groundwater Elev.:
First Encounter 681.3 ft ▼
Upon Completion Washed ft
After 24 Hrs. 678.3 ft ▽

Description	Elev.	DEPTH (ft)	BLOWS (/6")	UCS Qu (tsf)	MOIST (%)
Asphalt Shoulder	682.36				
Grey, CLAY Till					
			1		
Very stiff, moist			3	3.7	16
			4	B	
Brown/grey, with Silt		-5	2		
			2	2.5	30
			5	B	
	676.26				
Stiff, moist, grey, SILTY CLAY			1		
			2	1.1	28
			2	B	
	673.76				
Stiff, moist, grey, CLAY		-10	1		
			1	1.4	16
			4	B	
	671.26				
Very stiff, moist, brown, CLAY Till			1		
			3	2.9	14
			8	B	
		-15	4		
			6	2.5	14
			8	B	
Very stiff, grey			1		
			3	2.9	12
			7	B	
	663.26	-20	2		
Very stiff, moist, brown, CLAY Till			7	1.2	14
			9	B	
Hard, Grey			5		
			8	4.1	12
			11	B	
Very stiff		-25	5		
			6	2.3	12
			10	B	
	656.26				
Stiff, moist, grey, SILTY SAND			2		
			7	1.6	19
			12	S	
	653.26	-30	2		
Very stiff, moist, grey, CLAY Till			5	3.3	12
			7	B	
		-35	3		
			5	2.5	12
			6	B	
	643.26	-40	1		

The Unconfined Compressive Strength (UCS) Failure Mode is indicated by (B-Bulge, S-Shear, P-Penetrometer, E-Estimated)
The SPT (N value) is the sum of the last two blow values in each sampling zone (AASHTO T206), WH-Weight of Hammer.
BBS, form 137 (Rev. 8-99)

SOIL BORING 058-0074,-0075 SOIL 2021.GPJ IL_DOT.GDT 7/29/21

Illinois Department of Transportation
Division of Highways
IDOT D7

SOIL BORING LOG

Page 2 of 3

Date 5/24/21

ROUTE FAI 72 (I-72) DESCRIPTION I-72 over IL 121 and CN/ICC Railroad LOGGED BY E. Sandschafer

SECTION (58-63HVB)BR LOCATION SW 1/4, SEC. 29, TWP. 17N, RNG. 2E, 3rd PM
Latitude N 39.894423, Longitude W 89.007250

COUNTY Macon DRILLING METHOD Hollow stem auger & split spoon HAMMER Auto ETR = 91.8% @ 57.4 bpm

STRUCT. NO. 058-0074,-0075 (E) 058-0139,-0140 (P)
Station 724+45.63

BORING NO. 2 - Pier 1
Station 724+09
Offset 118.0 ft LT
Ground Surface Elev. 683.26 ft

Surface Water Elev. NA ft
Stream Bed Elev. NA ft

Groundwater Elev.:
First Encounter 681.3 ft ▼
Upon Completion Washed ft
After 24 Hrs. 678.3 ft ▽

Description	Elev.	DEPTH (ft)	BLOWS (/6")	UCS Qu (tsf)	MOIST (%)
Stiff, moist, grey, CLAY Till			3	1.6	12
			6	B	
Very stiff		-45	2		
			6	2.9	14
			9	B	
	633.76				
Medium, moist, grey, SANDY LOAM		-50	5		
			8	1.0	11
			6	B	
	628.76				
Stiff, moist, grey, SANDY CLAY LOAM		-55	1		
			4	1.5	14
			5	B	
	623.76				
Stiff, moist, grey, CLAY LOAM	623.26	-60	WH		
			3	1.0	14
			4	B	
		-65	1		
			3	1.2	12
			7	B	
		-70	WH		
			3	1.3	12
			6	B	
	608.76				
Very loose, wet, grey, fine-grained, SAND *2.0% passing #200 Sieve*		-75	WH		
			WH		10
			2		
	603.76				
Stiff, moist, brown, SILTY CLAY	603.26	-80	4		

The Unconfined Compressive Strength (UCS) Failure Mode is indicated by (B-Bulge, S-Shear, P-Penetrometer, E-Estimated)
The SPT (N value) is the sum of the last two blow values in each sampling zone (AASHTO T206), WH-Weight of Hammer.
BBS, form 137 (Rev. 8-99)

SOIL BORING 058-0074,-0075 SOIL 2021.GPJ IL_DOT.GDT 7/29/21

Illinois Department of Transportation
Division of Highways
IDOT D7

SOIL BORING LOG

Page 3 of 3

Date 5/24/21

ROUTE FAI 72 (I-72) DESCRIPTION I-72 over IL 121 and CN/ICC Railroad LOGGED BY E. Sandschafer

SECTION (58-63HVB)BR LOCATION SW 1/4, SEC. 29, TWP. 17N, RNG. 2E, 3rd PM
Latitude N 39.894423, Longitude W 89.007250

COUNTY Macon DRILLING METHOD Hollow stem auger & split spoon HAMMER Auto ETR = 91.8% @ 57.4 bpm

STRUCT. NO. 058-0074,-0075 (E) 058-0139,-0140 (P)
Station 724+45.63

BORING NO. 2 - Pier 1
Station 724+09
Offset 118.0 ft LT
Ground Surface Elev. 683.26 ft

Surface Water Elev. NA ft
Stream Bed Elev. NA ft

Groundwater Elev.:
First Encounter 681.3 ft ▼
Upon Completion Washed ft
After 24 Hrs. 678.3 ft ▽

Description	Elev.	DEPTH (ft)	BLOWS (/6")	UCS Qu (tsf)	MOIST (%)
Stiff, moist, brown, SILTY CLAY			8	1.7	11
			10	B	
	598.76				
Very stiff, moist, grey, CLAY Till		-85	3		
			6	2.7	11
			10	B	
		-90	3		
			8	2.1	8
			10	B	
		-95	5		
			9	3.9	6
			16	B	
	583.26	-100	7		
Hard, moist, grey, CLAY Till			19	6.6	9
			25	B	
	582.26				
Benchmark: IDOT 515 - Located in the median of Illinois 121. End of Boring		-105			
		-110			
		-115			
		-120			

The Unconfined Compressive Strength (UCS) Failure Mode is indicated by (B-Bulge, S-Shear, P-Penetrometer, E-Estimated)
The SPT (N value) is the sum of the last two blow values in each sampling zone (AASHTO T206), WH-Weight of Hammer.
BBS, form 137 (Rev. 8-99)

SOIL BORING 058-0074,-0075 SOIL 2021.GPJ IL_DOT.GDT 7/29/21

BORING 2

Illinois Department of Transportation
Division of Highways
IDOT D7

SOIL BORING LOG

Page 1 of 3

Date 5/25/21

ROUTE FAI 72 (I-72) DESCRIPTION I-72 over IL 121 and CN/ICC Railroad LOGGED BY E. Sandschafer

SECTION (58-63HVB)BR LOCATION SW 1/4, SEC. 29, TWP. 17N, RNG. 2E, 3rd PM
Latitude N 39.894185, Longitude W 89.006319

COUNTY Macon DRILLING METHOD Hollow stem auger & split spoon HAMMER Auto ETR = 91.8% @ 57.4 bpm

STRUCT. NO. 058-0074,-0075 (E) 058-0139,-0140 (P)
Station 724+45.63

BORING NO. 3 - Pier 2
Station 724+95
Offset 168.0 ft RT
Ground Surface Elev. 681.61 ft

Surface Water Elev. NA ft
Stream Bed Elev. NA ft

Groundwater Elev.:
First Encounter 617.1 ft ▼
Upon Completion 649.6 ft ▽
After 24 Hrs. 666.6 ft ▽

Description	Elev.	DEPTH (ft)	BLOWS (/6")	UCS Qu (tsf)	MOIST (%)
Aggregate Shoulder	680.61				
Brown, CLAY					
Stiff, moist			2 2 2	1.1 B	23
	677.11				
Very soft, wet, brown, SANDY LOAM		-5	WH 1 1	0.1 B	17
	673.61				
Stiff, moist, brown, CLAY			1 2 4	1.8 B	14
	672.11				
Very stiff, moist, brown, CLAY Till		-10	1 4 5	2.1 B	12
Grey			1 5 7	3.1 B	11
		▽15	3 5 8	2.1 B	12
			3 4 4	2.1 B	13
	661.61	-20	2		
Stiff, moist, grey, CLAY Till			3 4	1.7 B	13
	659.61				
Medium, moist, grey, CLAY LOAM Till			1 3 3	0.9 B	13
Stiff		-25	1 3 5	1.7 B	12
			1 3 5	1.7 B	13
		-30	2 4 5	1.4 B	12
	647.11				
Medium, moist, grey, SILTY LOAM		-35	5 16 15	0.9 S	12
	642.11				
Very stiff, moist, grey, CLAY Till	641.61	-40	2		

The Unconfined Compressive Strength (UCS) Failure Mode is indicated by (B-Bulge, S-Shear, P-Penetrometer, E-Estimated)
The SPT (N value) is the sum of the last two blow values in each sampling zone (AASHTO T206), WH-Weight of Hammer.
BBS, form 137 (Rev. 8-99)

Illinois Department of Transportation
Division of Highways
IDOT D7

SOIL BORING LOG

Page 2 of 3

Date 5/25/21

ROUTE FAI 72 (I-72) DESCRIPTION I-72 over IL 121 and CN/ICC Railroad LOGGED BY E. Sandschafer

SECTION (58-63HVB)BR LOCATION SW 1/4, SEC. 29, TWP. 17N, RNG. 2E, 3rd PM
Latitude N 39.894185, Longitude W 89.006319

COUNTY Macon DRILLING METHOD Hollow stem auger & split spoon HAMMER Auto ETR = 91.8% @ 57.4 bpm

STRUCT. NO. 058-0074,-0075 (E) 058-0139,-0140 (P)
Station 724+45.63

BORING NO. 3 - Pier 2
Station 724+95
Offset 168.0 ft RT
Ground Surface Elev. 681.61 ft

Surface Water Elev. NA ft
Stream Bed Elev. NA ft

Groundwater Elev.:
First Encounter 617.1 ft ▼
Upon Completion 649.6 ft ▽
After 24 Hrs. 666.6 ft ▽

Description	Elev.	DEPTH (ft)	BLOWS (/6")	UCS Qu (tsf)	MOIST (%)
Very stiff, moist, grey, CLAY Till			4 6	3.9 B	11
	637.11				
Stiff, moist, grey, SANDY CLAY Till		-45	4 3 5	1.7 B	12
	632.11				
Medium stiff, moist, grey, LOAM Till		-50	2 3 5	1.0 P	15
Stiff		-55	3 4 5	1.1 B	12
	622.11				
	621.61	-60	4		
Stiff, moist, grey, CLAY LOAM Till			5 8	2.0 B	15
Stiff to very stiff, rock in sampler		-65	17 13 13	2.0 P	13
	612.11				
Loose, wet, grey, medium-grained, SAND *2.6% passing # 200 Sieve*		-70	3 5 5		15
	607.11				
Very stiff, moist, grey, CLAY Till		-75	6 5 6	2.3 B	17
Grey/blue	601.61	-80	3		

The Unconfined Compressive Strength (UCS) Failure Mode is indicated by (B-Bulge, S-Shear, P-Penetrometer, E-Estimated)
The SPT (N value) is the sum of the last two blow values in each sampling zone (AASHTO T206), WH-Weight of Hammer.
BBS, form 137 (Rev. 8-99)

Illinois Department of Transportation
Division of Highways
IDOT D7

SOIL BORING LOG

Page 3 of 3

Date 5/25/21

ROUTE FAI 72 (I-72) DESCRIPTION I-72 over IL 121 and CN/ICC Railroad LOGGED BY E. Sandschafer

SECTION (58-63HVB)BR LOCATION SW 1/4, SEC. 29, TWP. 17N, RNG. 2E, 3rd PM
Latitude N 39.894185, Longitude W 89.006319

COUNTY Macon DRILLING METHOD Hollow stem auger & split spoon HAMMER Auto ETR = 91.8% @ 57.4 bpm

STRUCT. NO. 058-0074,-0075 (E) 058-0139,-0140 (P)
Station 724+45.63

BORING NO. 3 - Pier 2
Station 724+95
Offset 168.0 ft RT
Ground Surface Elev. 681.61 ft

Surface Water Elev. NA ft
Stream Bed Elev. NA ft

Groundwater Elev.:
First Encounter 617.1 ft ▼
Upon Completion 649.6 ft ▽
After 24 Hrs. 666.6 ft ▽

Description	Elev.	DEPTH (ft)	BLOWS (/6")	UCS Qu (tsf)	MOIST (%)
Very stiff, moist, grey/blue, CLAY Till			5 7	2.1 B	14
	580.61				
Hard, wet, grey, CLAY Till *Large rock bent sampler shoe*			4-1/4" 26 33	8.2 BS	8
Benchmark: IDOT 515 - Located in the median of Illinois 121. End of Boring					
Hard, grey		-85	8 10 15	4.5 B	11
Stiff		-90	9 7 7	1.4 B	11
Very stiff		-95	3 9 11	3.1 B	9
	581.61	-100	50		

The Unconfined Compressive Strength (UCS) Failure Mode is indicated by (B-Bulge, S-Shear, P-Penetrometer, E-Estimated)
The SPT (N value) is the sum of the last two blow values in each sampling zone (AASHTO T206), WH-Weight of Hammer.
BBS, form 137 (Rev. 8-99)

BORING 3

Illinois Department of Transportation
Division of Highways
IDOT D7

SOIL BORING LOG

Date 7/7/21

ROUTE FAI 72 (I-72) DESCRIPTION I-72 over IL 121 and CN/ICC Railroad LOGGED BY E. Sandschafer

SECTION (58-63HVB)BR LOCATION SW 1/4, SEC. 29, TWP. 17N, RNG. 2E, 3rd PM.
Latitude N 39.894599, Longitude W 89.006521

COUNTY Macon DRILLING METHOD Hollow stem auger & split spoon HAMMER Auto ETR = 91.8% @ 57.4 bpm

STRUCT. NO. 058-0074,-0075 (E) 058-0139,-0140 (P)
Station 724+45.63

BORING NO. 4 - East Abutment
Station 725+84
Offset 0.0 ft Centerline
Ground Surface Elev. 709.23 ft

Surface Water Elev. NA ft
Stream Bed Elev. NA ft

Groundwater Elev.:
First Encounter 624.7 ft ▼
Upon Completion Washed ft
After 24 Hrs. 677.2 ft ▽

Description	Elev. (ft)	DEPTH (ft)	BLOWS (/6")	UCS Qu (tsf)	MOIST (%)
Topsoil	707.23				
Hard, moist, brown, CLAY Till *Embankment*			4		
			7	7.0	10
			7	B	
		-5	4		
Very stiff, grey			4	2.5	11
			5	B	
			3		
Stiff			3	1.2	12
			3	B	
		-10	3		
Hard			6	4.3	20
			7	B	
			3		
Stiff, rock damaged shoe			4	1.5	12
			6	P	
		-15	3		
Very stiff			4	3.3	11
			5	B	
			3		
Stiff			6	1.8	12
			5	P	
	689.23	-20	2		
Stiff, moist, grey, CLAY Till *Embankment*			4	1.9	10
			4	B	
			1		
			2	1.3	18
			3	B	
		-25	2		
Very stiff			2	2.7	15
			6	B	
			2		
			6	3.9	15
			14	B	
	679.73				
Very stiff, moist, grey, CLAY with SILT		-30	3		
			5	2.9	24
			7	B	
	674.73				
Stiff, moist, brown, CLAY		-35	1		
			3	1.8	14
			3	B	
	669.73				
Very stiff, moist, grey, CLAY Till	669.23	-40	8		

The Unconfined Compressive Strength (UCS) Failure Mode is indicated by (B-Bulge, S-Shear, P-Penetrometer, E-Estimated)
The SPT (N value) is the sum of the last two blow values in each sampling zone (AASHTO T206), WH-Weight of Hammer.
BBS, form 137 (Rev. 8-99)

SOIL BORING 058-0074,-0075 SOIL 2021.GPJ IL_DOT.GDT 7/29/21

Illinois Department of Transportation
Division of Highways
IDOT D7

SOIL BORING LOG

Date 7/7/21

ROUTE FAI 72 (I-72) DESCRIPTION I-72 over IL 121 and CN/ICC Railroad LOGGED BY E. Sandschafer

SECTION (58-63HVB)BR LOCATION SW 1/4, SEC. 29, TWP. 17N, RNG. 2E, 3rd PM.
Latitude N 39.894599, Longitude W 89.006521

COUNTY Macon DRILLING METHOD Hollow stem auger & split spoon HAMMER Auto ETR = 91.8% @ 57.4 bpm

STRUCT. NO. 058-0074,-0075 (E) 058-0139,-0140 (P)
Station 724+45.63

BORING NO. 4 - East Abutment
Station 725+84
Offset 0.0 ft Centerline
Ground Surface Elev. 709.23 ft

Surface Water Elev. NA ft
Stream Bed Elev. NA ft

Groundwater Elev.:
First Encounter 624.7 ft ▼
Upon Completion Washed ft
After 24 Hrs. 677.2 ft ▽

Description	Elev. (ft)	DEPTH (ft)	BLOWS (/6")	UCS Qu (tsf)	MOIST (%)
Very stiff, moist, grey, CLAY Till			11	2.1	12
			13	B	
		-45	11		
2" rock in sampler			15	2.1	11
			17	B	
		-50	3		
			6	2.7	13
			8	B	
Stiff		-55	1		
			4	1.7	13
			6	B	
	649.23	-60	1		
Stiff, moist, grey, CLAY Till			3	1.2	14
			6	B	
	644.73				
Stiff, moist, grey, SILTY LOAM		-65	1		
			4	1.0	19
			7	B	
	639.73				
Stiff, moist, grey, CLAY LOAM Till		-70	2		
			4	1.8	12
			8	B	
Very stiff		-75	2		
			7	3.7	11
			10	B	
	629.73				
	629.23	-80	1		

The Unconfined Compressive Strength (UCS) Failure Mode is indicated by (B-Bulge, S-Shear, P-Penetrometer, E-Estimated)
The SPT (N value) is the sum of the last two blow values in each sampling zone (AASHTO T206), WH-Weight of Hammer.
BBS, form 137 (Rev. 8-99)

SOIL BORING 058-0074,-0075 SOIL 2021.GPJ IL_DOT.GDT 7/29/21

Illinois Department of Transportation
Division of Highways
IDOT D7

SOIL BORING LOG

Date 7/7/21

ROUTE FAI 72 (I-72) DESCRIPTION I-72 over IL 121 and CN/ICC Railroad LOGGED BY E. Sandschafer

SECTION (58-63HVB)BR LOCATION SW 1/4, SEC. 29, TWP. 17N, RNG. 2E, 3rd PM.
Latitude N 39.894599, Longitude W 89.006521

COUNTY Macon DRILLING METHOD Hollow stem auger & split spoon HAMMER Auto ETR = 91.8% @ 57.4 bpm

STRUCT. NO. 058-0074,-0075 (E) 058-0139,-0140 (P)
Station 724+45.63

BORING NO. 4 - East Abutment
Station 725+84
Offset 0.0 ft Centerline
Ground Surface Elev. 709.23 ft

Surface Water Elev. NA ft
Stream Bed Elev. NA ft

Groundwater Elev.:
First Encounter 624.7 ft ▼
Upon Completion Washed ft
After 24 Hrs. 677.2 ft ▽

Description	Elev. (ft)	DEPTH (ft)	BLOWS (/6")	UCS Qu (tsf)	MOIST (%)
Stiff, moist, grey, SANDY CLAY Till			2	1.0	13
			4	B	
	624.73 ▼				
Medium, moist, grey, SANDY LOAM		-85	1		
			5	0.5	13
			7	S	
	619.73				
Medium to dense, moist, grey, SAND with SILT		-90	7		
			14		12
			16		
	614.73				
Stiff, moist, grey, SANDY CLAY		-95	13		
			11	1.3	12
			8	B	
	609.73				
	609.23	-100	5		
Stiff, moist, brown, SILT with SAND			4	1.2	24
			3	BS	
	604.73				
Medium, moist, grey, SILTY CLAY *Washed*		-105	4		
			6	0.9	18
			6	B	
	599.73				
Very stiff, moist, blue grey, CLAY LOAM Till		-110	2		
			5	2.1	18
			7	B	
		-115	6		
			13	3.3	12
			20	B	
	593.23				
Benchmark: DEC MAINT AZ - Brass disk set in concrete at Sta. 909+40, 115' LT. End of Boring		-120			

The Unconfined Compressive Strength (UCS) Failure Mode is indicated by (B-Bulge, S-Shear, P-Penetrometer, E-Estimated)
The SPT (N value) is the sum of the last two blow values in each sampling zone (AASHTO T206), WH-Weight of Hammer.
BBS, form 137 (Rev. 8-99)

SOIL BORING 058-0074,-0075 SOIL 2021.GPJ IL_DOT.GDT 7/29/21

BORING 4

TWO LANE/TWO WAY

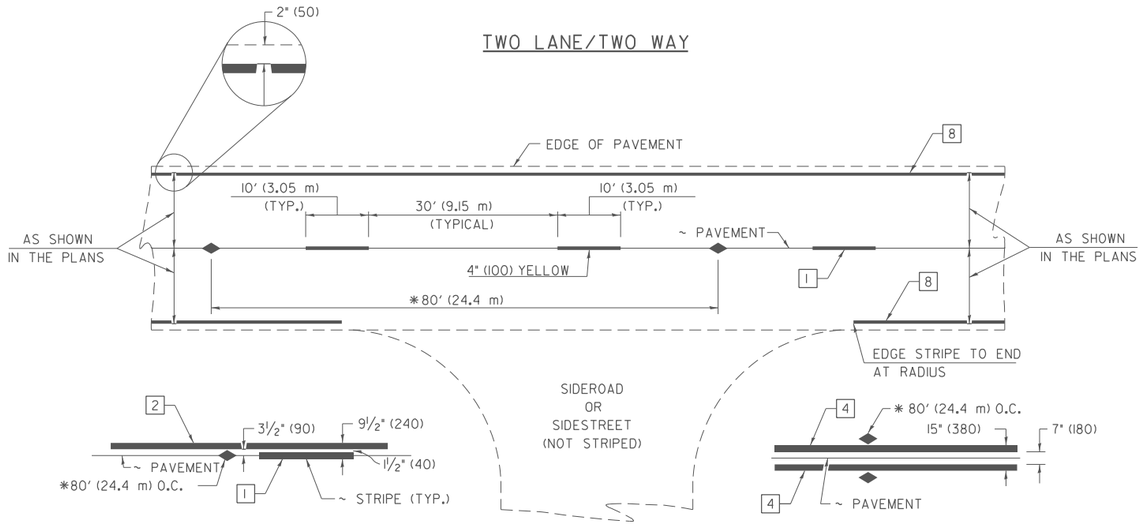

SINGLE NO PASSING

DOUBLE NO PASSING

* REDUCE TO 40' (12.2 m) O.C. ON CURVES WITH POSTED OR ADVISORY SPEEDS OF 45 mph (70 km/h) OR LESS.

PAVEMENT MARKING LEGEND

1	4" (100) SKIP-DASH (YELLOW)
2	4" (100) SOLID (YELLOW)
3	12" (300) DIAGONAL (YELLOW)
4	4" (100) DOUBLE YELLOW (NARROW)
5	12" (300) SOLID WHITE
6	RESERVED
7	6" (150) SKIP-DASH (WHITE)
8	4" (100) SOLID (WHITE)
9	12" (300) DIAGONAL (WHITE)
10	6" (150) SOLID (WHITE)
11	24" (600) STOP BAR (WHITE)
12	8" (200) SOLID (WHITE)
13	4" (100) PARKING WHITE

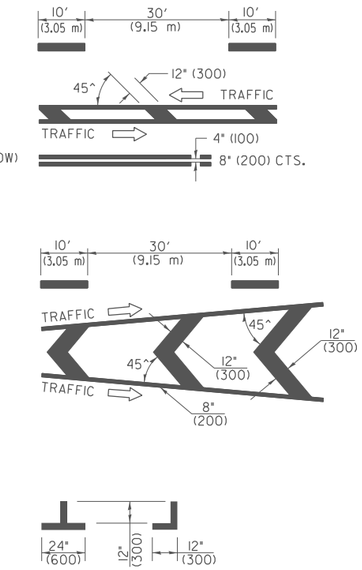

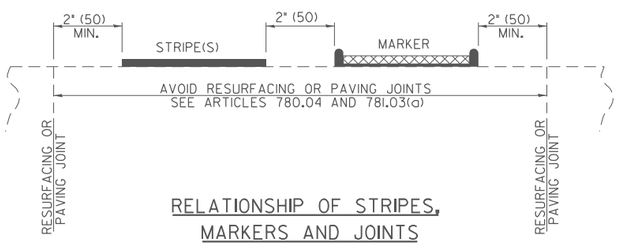

RELATIONSHIP OF STRIPES, MARKERS AND JOINTS

TYPICAL PAVEMENT MARKERS LEGEND

- ◆ TWO-WAY AMBER MARKER
- ▶ ONE-WAY AMBER MARKER
- ▷ ONE-WAY CRYSTAL MARKER

RAISED REFLECTIVE PAVEMENT MARKERS

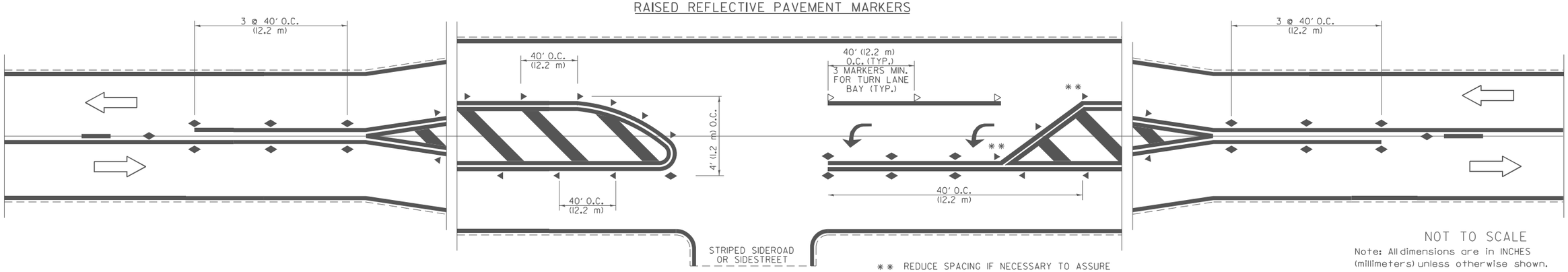

** REDUCE SPACING IF NECESSARY TO ASSURE MARKERS AT CORNER POINTS.

NOT TO SCALE

Note: All dimensions are in INCHES (millimeters) unless otherwise shown.

DISTRICT 7 DETAIL NO. 78000001

MODEL: D7 Standards-1 [Sheet]
FILE NAME: P:\5XXX\52XX-53XX\5289 - PTB 201-037 D7 VV_HLRWork Order #3\CADD Data\Sheets\D774705-sht-D7Standards.dgn

CDI — CIVIL DESIGN, INC. WBE | DBE — EFFINGHAM, IL — LICENSE #184.003222

USER NAME = kulrich	DESIGNED -	REVISED -	
	DRAWN -	REVISED -	
	CHECKED -	REVISED -	
PLOT DATE = 8/21/2025	DATE -	REVISED -	

STATE OF ILLINOIS
DEPARTMENT OF TRANSPORTATION

PAVEMENT MARKING AND RAISED REFLECTIVE PAVEMENT MARKERS (RURAL AND URBAN APPLICATIONS)

SCALE: | SHEET 1 OF 4 SHEETS | STA. | TO STA.

F.A.I. RTE.	SECTION	COUNTY	TOTAL SHEETS	SHEET NO.
72	(58-63 HVB) BR	MACON	122	111

CONTRACT NO. 74705

ILLINOIS | FED. AID PROJECT

URBAN LEFT TURN

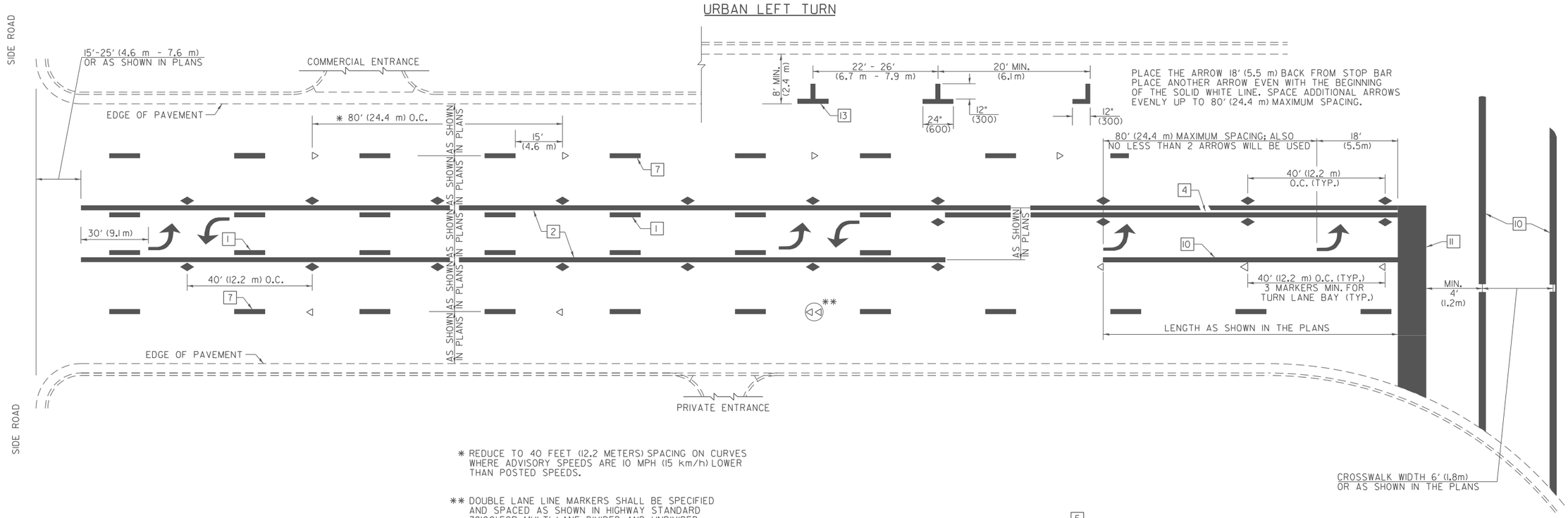

* REDUCE TO 40 FEET (12.2 METERS) SPACING ON CURVES WHERE ADVISORY SPEEDS ARE 10 MPH (15 km/h) LOWER THAN POSTED SPEEDS.

** DOUBLE LANE LINE MARKERS SHALL BE SPECIFIED AND SPACED AS SHOWN IN HIGHWAY STANDARD 781001 FOR MULTI-LANE DIVIDED AND UNDIVIDED HIGHWAYS.

PAVEMENT MARKING LEGEND

1. 4" (100) SKIP-DASH (YELLOW)
2. 4" (100) SOLID (YELLOW)
3. 12" (300) DIAGONAL (YELLOW)
4. 4" (100) DOUBLE YELLOW (NARROW)
5. 12" (300) SOLID WHITE
6. RESERVED
7. 6" (150) SKIP-DASH (WHITE)
8. 4" (100) SOLID (WHITE)
9. 12" (300) DIAGONAL (WHITE)
10. 6" (150) SOLID (WHITE)
11. 24" (600) STOP BAR (WHITE)
12. 8" (200) SOLID (WHITE)
13. 4" (100) PARKING WHITE

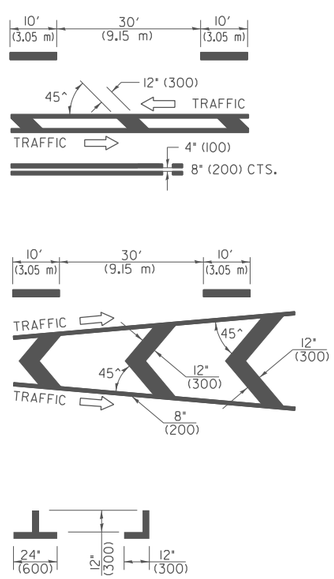

GENERAL NOTES

1. TURN ARROW PAIRS SHALL BE PLACED AT 250'(75 m) INTERVALS AND SHALL BE EVENLY SPACED BETWEEN BOTH ENDS OF THE BIDIRECTIONAL LEFT TURN LANE. USE A MINIMUM OF TWO PAIRS PER BLOCK.
2. THE SOLID YELLOW PAVEMENT MARKINGS 2 SHOULD GENERALLY START OR END NEAR THE RADIUS POINT OF EACH STREET RETURN EXCEPT WHERE ONE OR BOTH ENDS WOULD INCLUDE STOP BARS.
3. THE SKIP-DASH PAVEMENT MARKINGS 1 OR 7 SHOULD BE CENTERED BETWEEN BOTH ENDS OF EACH CITY BLOCK AND SHALL BE PLACED SO THEY LINE UP ACROSS FROM EACH OTHER.
4. USE LARGE ARROW SIZE FOR BOTH RURAL AND URBAN LOCATIONS. (SEE LAST PAGE OF SECTION 780x FOR SYMBOLS TABLE)
5. LANE LINE EXTENSIONS SHALL BE THE SAME COLOR AND WIDTH AS THE LANE LINE BEING EXTENDED.

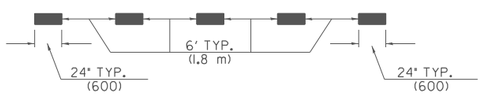

LANE LINE EXTENSIONS

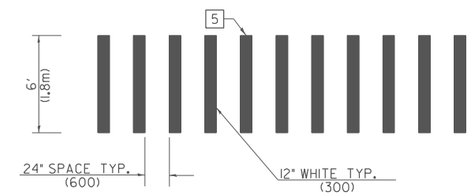

CROSSWALK DETAIL
(DECATUR CITY LIMITS ONLY)

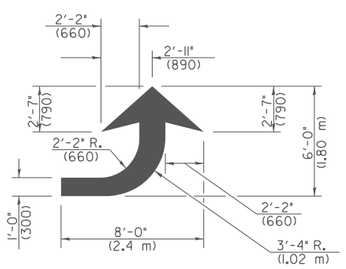

LEFT ARROW
REVERSE FOR RIGHT ARROW
AREA = 15.6 SQ. FT. (1.47 m 2)
(WHITE)

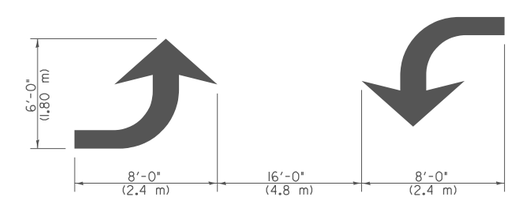

TYPICAL DOUBLE
TURN ARROWS (WHITE)

NOT TO SCALE

Note: All dimensions are in INCHES (millimeters) unless otherwise shown.

DISTRICT 7 DETAIL NO. 78000001

CDI — CIVIL DESIGN, INC. WBE / DBE — EFFINGHAM, IL LICENSE #184.003222	USER NAME = kulrich	DESIGNED -	REVISED -
		DRAWN -	REVISED -
		CHECKED -	REVISED -
	PLOT DATE = 8/21/2025	DATE -	REVISED -

STATE OF ILLINOIS
DEPARTMENT OF TRANSPORTATION

PAVEMENT MARKING AND RAISED REFLECTIVE PAVEMENT MARKERS (RURAL AND URBAN APPLICATIONS)

SCALE: | SHEET 2 OF 4 SHEETS | STA. | TO STA.

F.A.I. RTE.	SECTION	COUNTY	TOTAL SHEETS	SHEET NO.
72	(58-63 HVB) BR	MACON	122	112
		CONTRACT NO. 74705		
		ILLINOIS FED. AID PROJECT		

MODEL: D7 Standards-2 [Sheet]
FILE NAME: P:\5XXX\52XX-53XX\5289 - PTB 201-037 D7 VV_HLR\Work Order #3\CADD Data\Sheets\D774705-sht-D7Standards.dgn

ISLAND

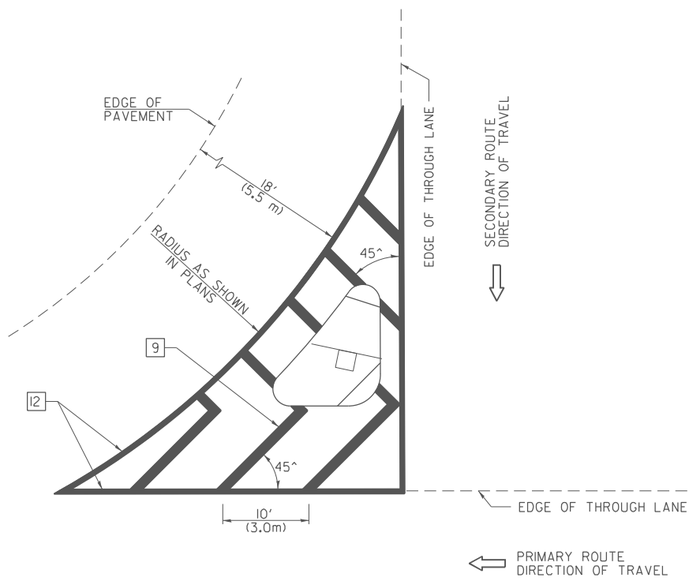

GENERAL NOTES

1. RAISED AND CORRUGATED MEDIANS SHALL BE OUTLINED WITH [2] IF PRESENT.
2. SOME OF THE INFORMATION INCLUDED WITH THIS DETAIL MAY NOT BE APPLICABLE TO THIS IMPROVEMENT.
3. PAVEMENT MARKINGS ARE TO BE EXTENDED THROUGH OMISSIONS WHEN APPLICABLE.
4. FINAL PAVEMENT MARKINGS SHALL BE IN PLACE PRIOR TO PLACING ANY RAISED REFLECTIVE PAVEMENT MARKERS.
5. THE FOLLOWING CRITERIA SHALL BE USED FOR SELECTING THE DIAGONAL PAVEMENT MARKING SPACING:

<30 MPH	(<50 km/h)	15′ (4.5 m)
30-45 MPH	(50-75 km/h	20′ (6.0 m)
>45 MPH	(>75 km/h	30′ (9.0 m)

PAVEMENT MARKING LEGEND

1	4" (100) SKIP-DASH (YELLOW)
2	4" (100) SOLID (YELLOW)
3	12" (300) DIAGONAL (YELLOW)
4	4" (100) DOUBLE YELLOW (NARROW)
5	12" (300) SOLID WHITE
6	RESERVED
7	6" (150) SKIP-DASH (WHITE)
8	4" (100) SOLID (WHITE)
9	12" (300) DIAGONAL (WHITE)
10	6" (150) SOLID (WHITE)
11	24" (600) STOP BAR (WHITE)
12	8" (200) SOLID (WHITE)
13	4" (100) PARKING WHITE

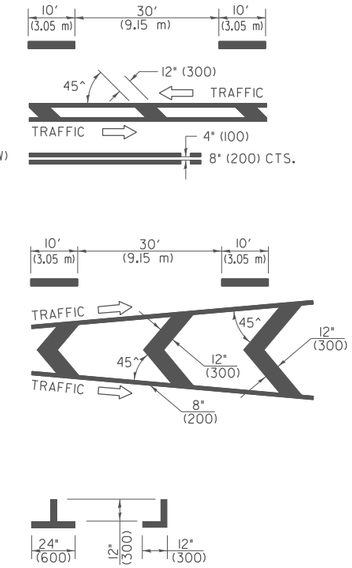

RURAL LEFT TURN STRIPING

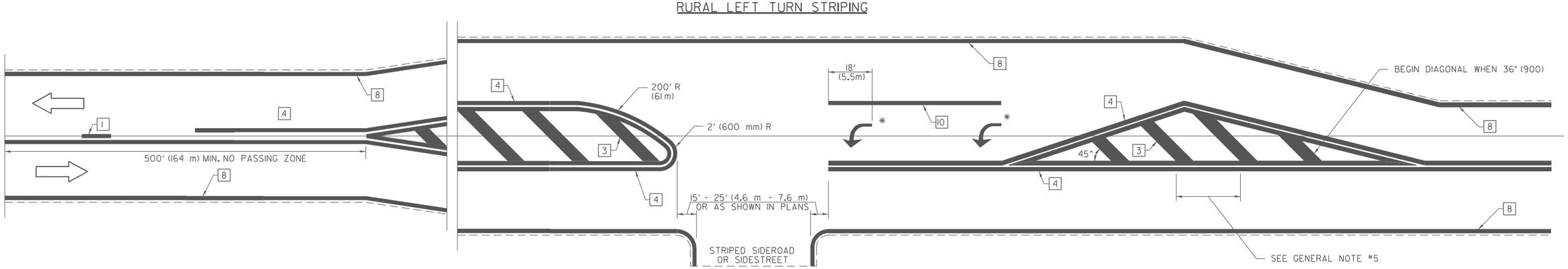

* PLACE AN ARROW 18′ (5.5 m) BACK FROM STOP BAR. PLACE ANOTHER ARROW EVEN WITH THE BEGINNING OF THE SOLID WHITE LINE. SPACE ADDITIONAL ARROWS EVENLY UP TO 80′ (24.4 m) MAXIMUM SPACING. USE MINIMUM OF 2 ARROWS.

NOT TO SCALE

Note: All dimensions are in INCHES (millimeters) unless otherwise shown.

DISTRICT 7 DETAIL NO. 78000001

MODEL: D7 Standards-3 [Sheet]
FILE NAME: P:\5XXX\52XX-53XX\5289 - PTB 201-037 D7 VV_HLR\Work Order #3\CADD Data\Sheets\D774705-sht-D7Standards.dgn

CDI CIVIL DESIGN, INC. WBE | DBE EFFINGHAM, IL LICENSE #184.003222

USER NAME = kulrich	DESIGNED -	REVISED -	
	DRAWN -	REVISED -	
	CHECKED -	REVISED -	
PLOT DATE = 8/21/2025	DATE -	REVISED -	

STATE OF ILLINOIS
DEPARTMENT OF TRANSPORTATION

PAVEMENT MARKING AND RAISED REFLECTIVE PAVEMENT MARKERS (RURAL AND URBAN APPLICATIONS)

SCALE: | SHEET 3 OF 4 SHEETS | STA. | TO STA.

F.A.I. RTE.	SECTION	COUNTY	TOTAL SHEETS	SHEET NO.
72	(58-63 HVB) BR	MACON	122	113

CONTRACT NO. 74705

ILLINOIS | FED. AID PROJECT

PAVEMENT MARKINGS AT RAILROAD-HIGHWAY GRADE CROSSING

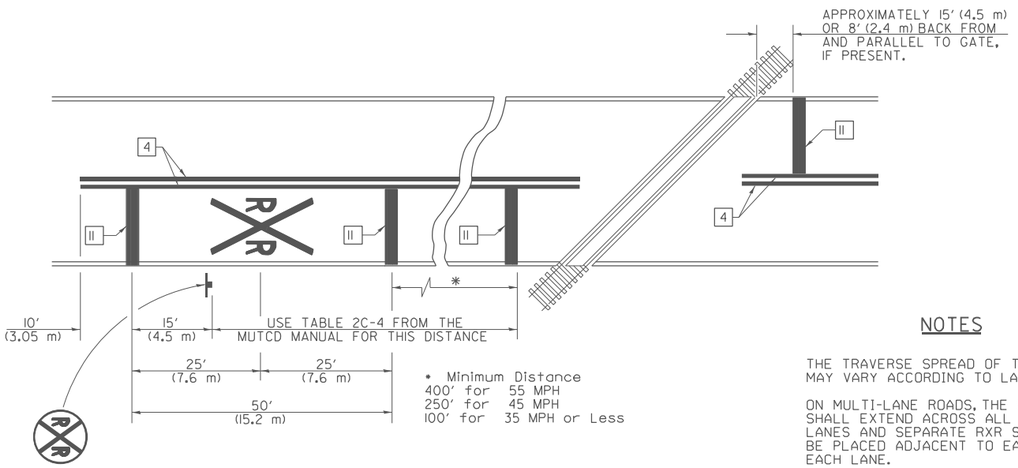

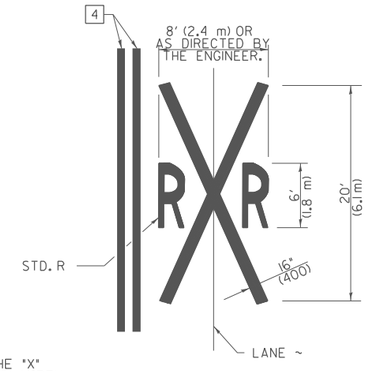

NOTES

THE TRAVERSE SPREAD OF THE "X" MAY VARY ACCORDING TO LANE WIDTH.

ON MULTI-LANE ROADS, THE STOP LINES SHALL EXTEND ACROSS ALL APPROACH LANES AND SEPARATE RXR SYMBOLS SHALL BE PLACED ADJACENT TO EACH OTHER IN EACH LANE.

WHEN THE PAVEMENT MARKING SYMBOL IS USED, A PORTION OF THE SYMBOL SHOULD BE LOCATED DIRECTLY ADJACENT TO THE ADVANCE WARNING SIGN (W10-1) AS PLACED BY TABLE II-1, CONDITION B OF THE MUTCD.

PAVEMENT MARKING LEGEND

1	4" (100) SKIP-DASH (YELLOW)
2	4" (100) SOLID (YELLOW)
3	12" (300) DIAGONAL (YELLOW)
4	4" (100) DOUBLE YELLOW (NARROW)
5	12" (300) SOLID WHITE
6	RESERVED
7	6" (150) SKIP-DASH (WHITE)
8	4" (100) SOLID (WHITE)
9	12" (300) DIAGONAL (WHITE)
10	6" (150) SOLID (WHITE)
11	24" (600) STOP BAR (WHITE)
12	8" (200) SOLID (WHITE)
13	4" (100) PARKING WHITE

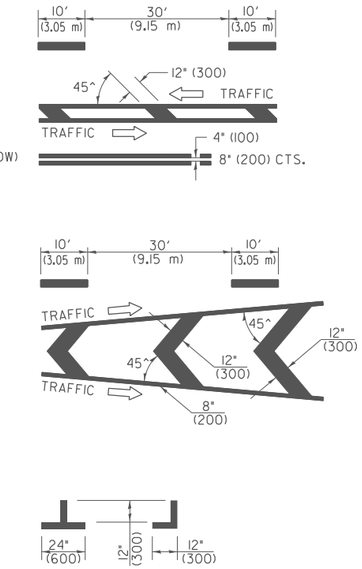

RAILROAD CROSSING WITH INTERCONNECT ONLY

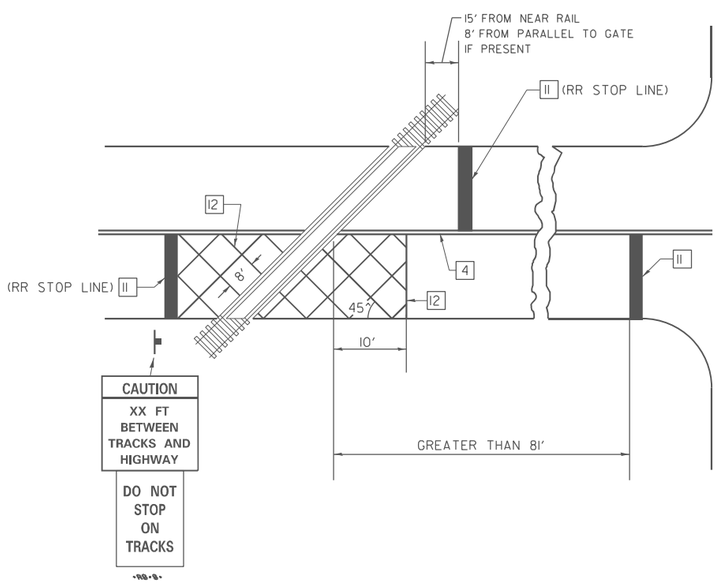

RAILROAD CROSSING WITH INTERCONNECT AND PRE-SIGNALS

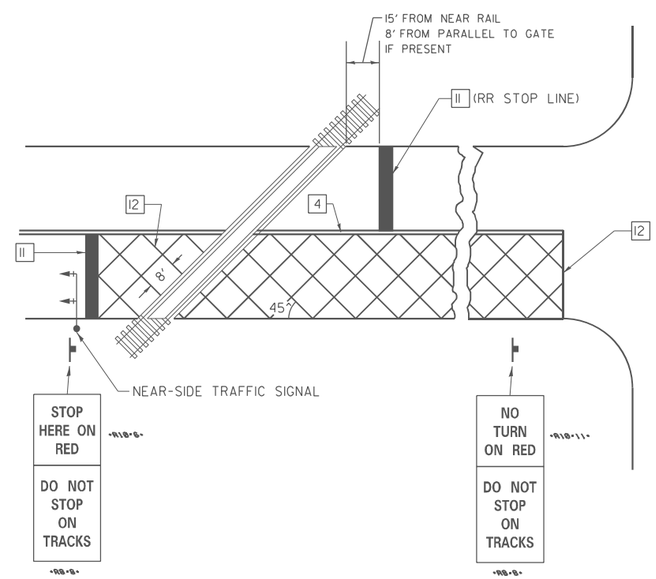

SUPPLEMENTAL PAVEMENT MARKING TREATMENT FOR RAILROAD-HIGHWAY GRADE CROSSING

GENERAL NOTES

1. SUPPLEMENTAL PAVEMENT MARKINGS TO BE INSTALLED ONLY ON APPROACHES TO INTERSECTIONS CONTROLLED BY TRAFFIC SIGNALS WHICH ARE INTERCONNECTED WITH THE RAILROAD WARNING SIGNALS.
2. EXTEND PAVEMENT MARKINGS TO THE INTERSECTION ONLY WHERE NEAR-SIDE TRAFFIC SIGNALS ARE USED.

NOT TO SCALE

Note: All dimensions are in INCHES (millimeters) unless otherwise shown.

DISTRICT 7 DETAIL NO. 78000001

MODEL: D7 Standards-4 [Sheet]
FILE NAME: P:\5XXX\52XX-53XX\5289 - PTB 201-037 D7 VV_HLR\Work Order #3\CADD Data\Sheets\D774705-sht-D7Standards.dgn

CDI — CIVIL DESIGN, INC. WBE | DBE — EFFINGHAM, IL — LICENSE #184.003222

USER NAME = kulrich	DESIGNED -	REVISED -	
	DRAWN -	REVISED -	
	CHECKED -	REVISED -	
PLOT DATE = 8/21/2025	DATE -	REVISED -	

STATE OF ILLINOIS
DEPARTMENT OF TRANSPORTATION

PAVEMENT MARKING AND RAISED REFLECTIVE PAVEMENT MARKERS (RURAL AND URBAN APPLICATIONS)

SCALE: | SHEET 4 OF 4 SHEETS | STA. | TO STA.

F.A.I. RTE.	SECTION	COUNTY	TOTAL SHEETS	SHEET NO.
72	(58-63 HVB) BR	MACON	122	114

CONTRACT NO. 74705

ILLINOIS | FED. AID PROJECT

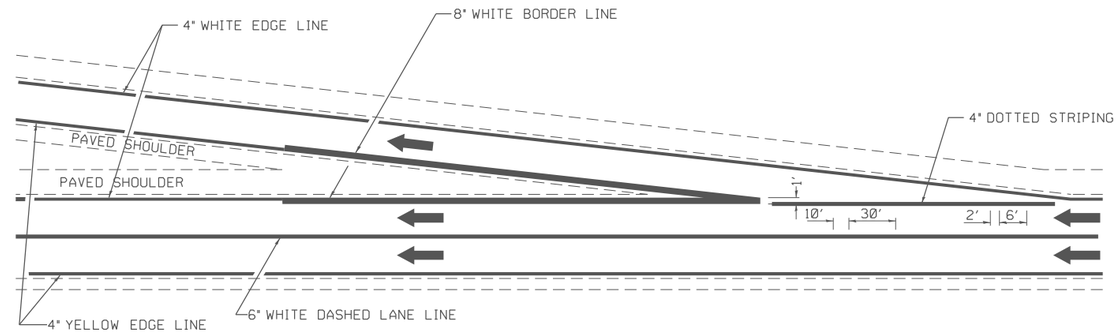

TYPICAL EXIT RAMP MARKING

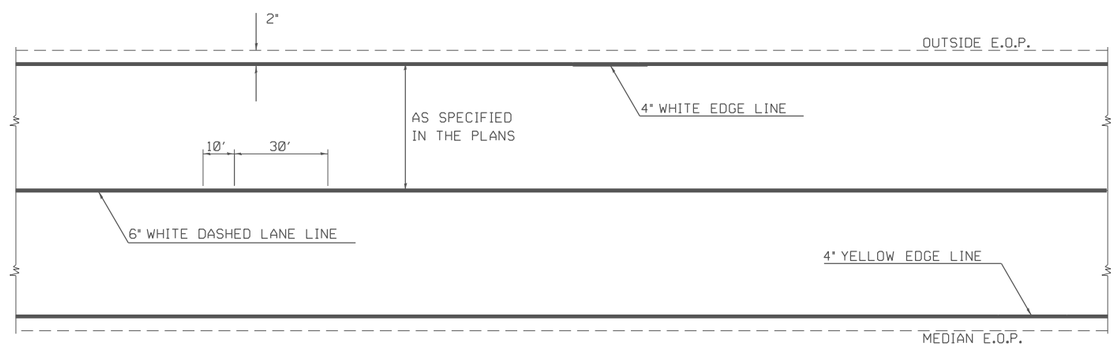

TYPICAL CENTERLINE & EDGELINE MARKINGS

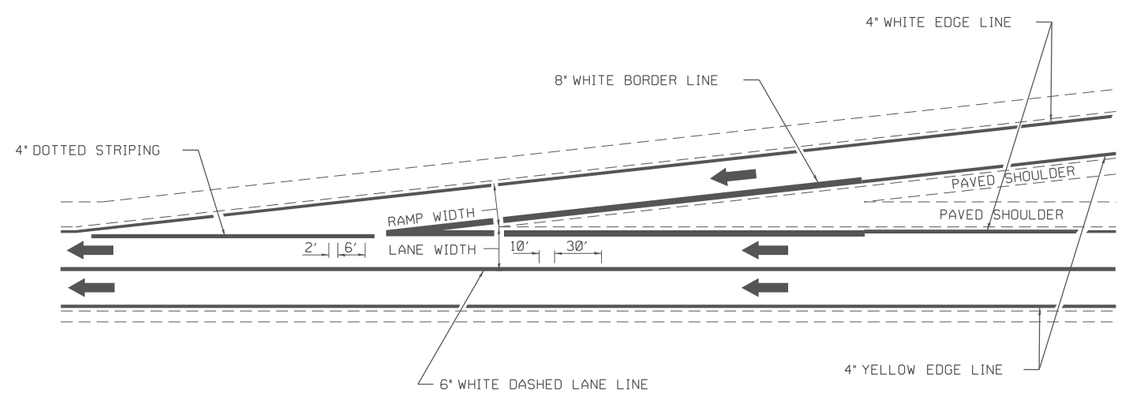

TYPICAL ENTRANCE RAMP MARKING

NOT TO SCALE

DISTRICT 7 DETAIL NO. 78000002

MODEL: D7 Standards-5 [Sheet]
FILE NAME: P:\5XXX\52XX-53XX\5289 - PTB 201-037 D7 VV_HLR\Work Order #3\CADD Data\Sheets\D774705-sht-D7Standards.dgn

CDI — CIVIL DESIGN, INC. WBE | DBE — EFFINGHAM, IL — LICENSE #184.003222

USER NAME = kulrich	DESIGNED -	REVISED -	
	DRAWN -	REVISED -	
	CHECKED -	REVISED -	
PLOT DATE = 8/21/2025	DATE -	REVISED -	

STATE OF ILLINOIS
DEPARTMENT OF TRANSPORTATION

TYPICAL APPLICATIONS OF INTERSTATE PAVEMENT MARKINGS

SCALE: | SHEET 1 OF 2 SHEETS | STA. | TO STA.

F.A.I. RTE.	SECTION	COUNTY	TOTAL SHEETS	SHEET NO.
72	(58-63 HVB) BR	MACON	122	115

CONTRACT NO. 74705

ILLINOIS | FED. AID PROJECT

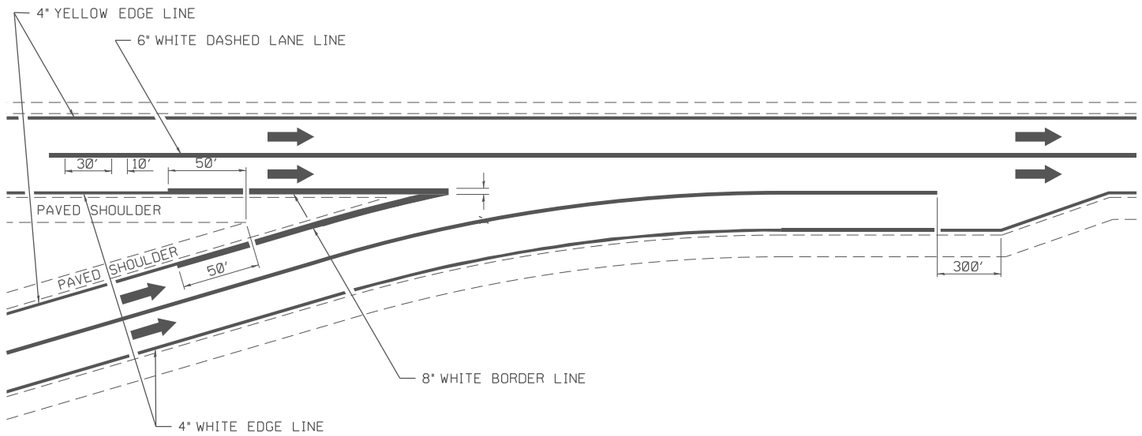

TYPICAL CONVERGENCE MARKING

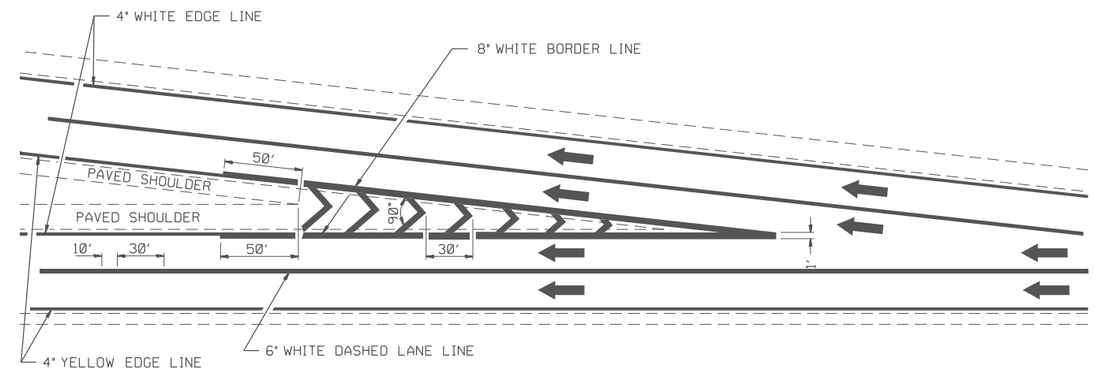

TYPICAL DIVERGENCE MARKING

AERIAL SPEED CHECK ZONES

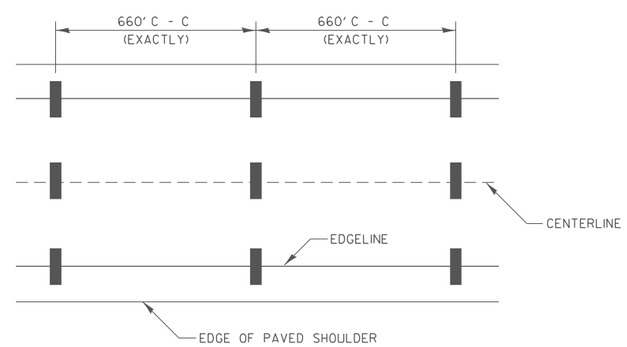

IT WILL BE NECESSARY TO HAVE A REPRESENTATIVE OF THE STATE POLICE PRESENT SO THAT THE ACCURACY OF MEASUREMENT CAN BE ATTESTED TO IN COURT.

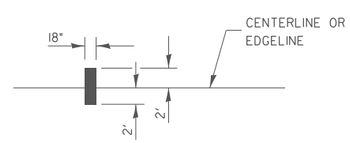

NOT TO SCALE

DISTRICT 7 DETAIL NO. 78000002

MODEL: D7 Standards-6 [Sheet]
FILE NAME: P:\5XXX\52XX-53XX\5289 - PTB 201-037 D7 VV_HLR\Work Order #3\CADD Data\Sheets\D774705-sht-D7Standards.dgn

CDI — CIVIL DESIGN, INC. WBE | DBE — EFFINGHAM, IL — LICENSE #184.003222

USER NAME = kulrich	DESIGNED -	REVISED -	
	DRAWN -	REVISED -	
	CHECKED -	REVISED -	
PLOT DATE = 8/21/2025	DATE -	REVISED -	

STATE OF ILLINOIS
DEPARTMENT OF TRANSPORTATION

TYPICAL APPLICATIONS OF INTERSTATES PAVEMENT MARKING

SCALE: | SHEET 2 OF 2 SHEETS | STA. | TO STA.

F.A.I. RTE.	SECTION	COUNTY	TOTAL SHEETS	SHEET NO.
72	(58-63 HVB) BR	MACON	122	116

CONTRACT NO. 74705

ILLINOIS | FED. AID PROJECT

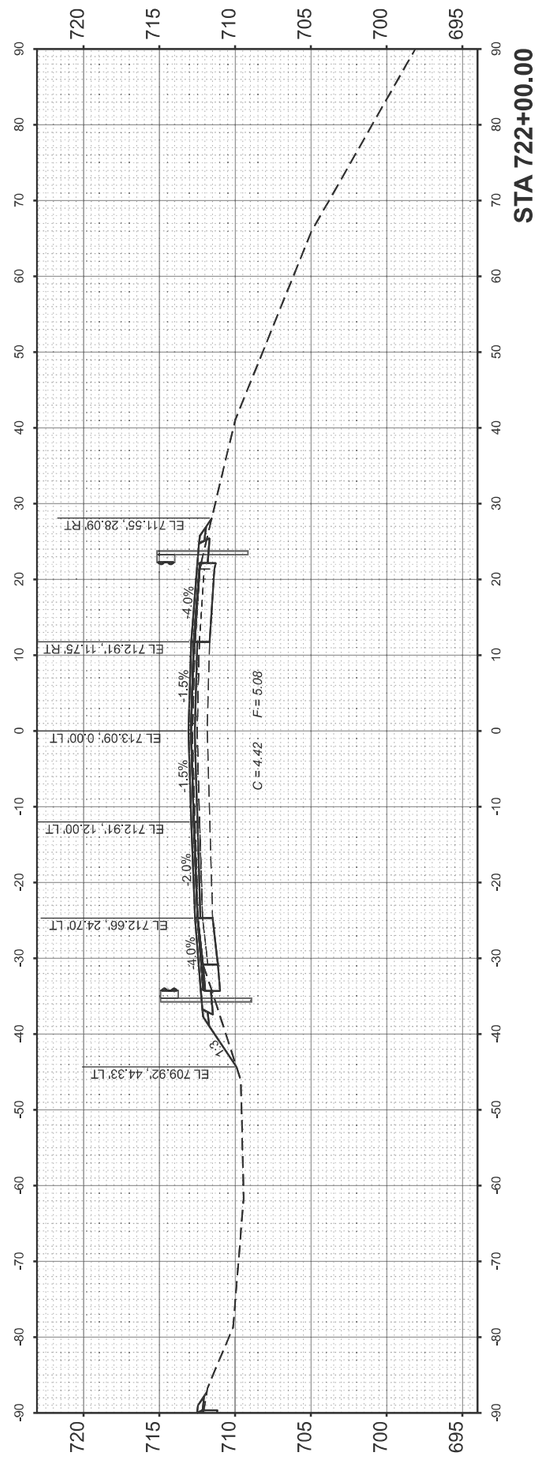

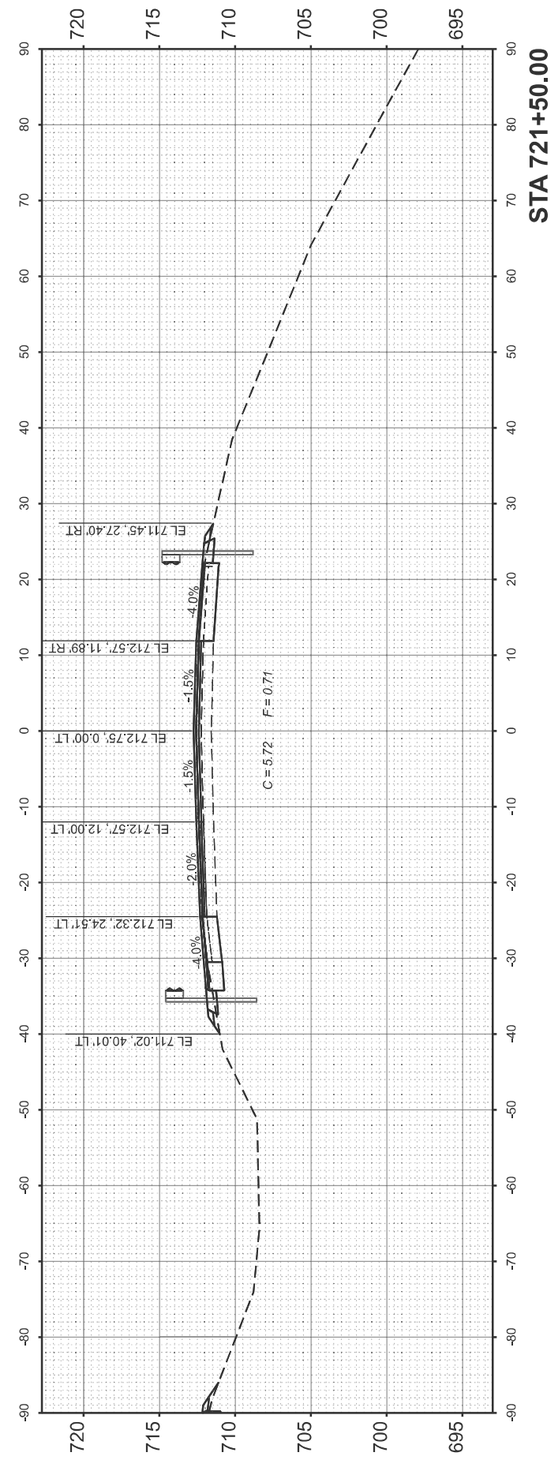

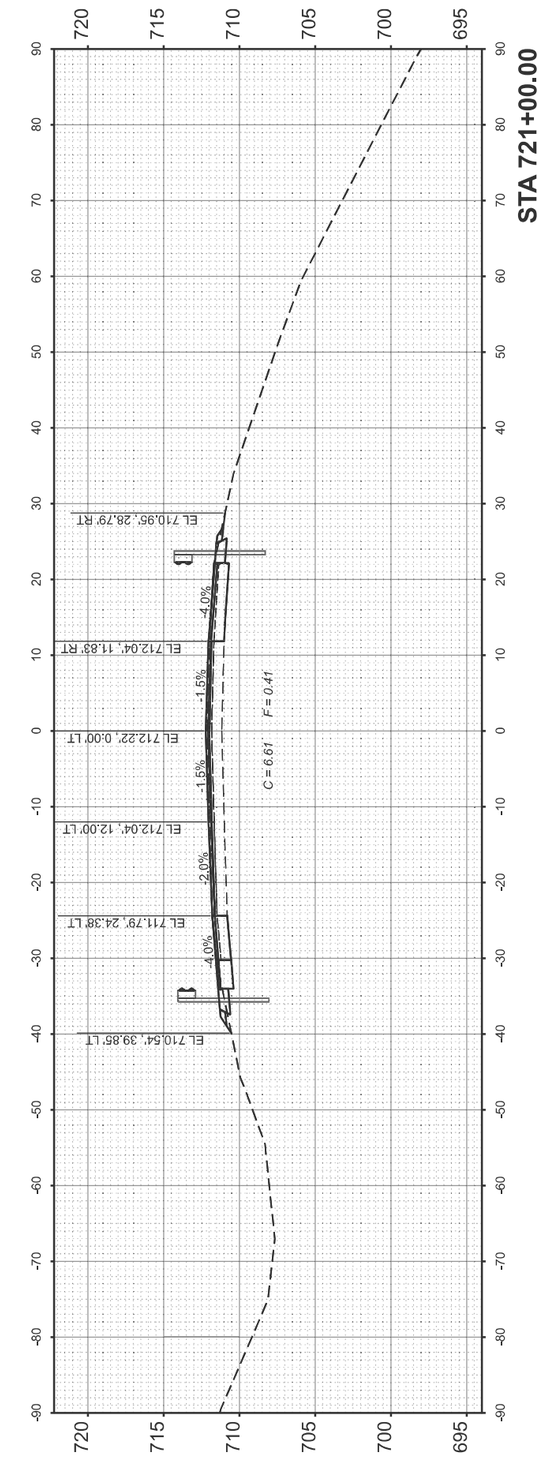

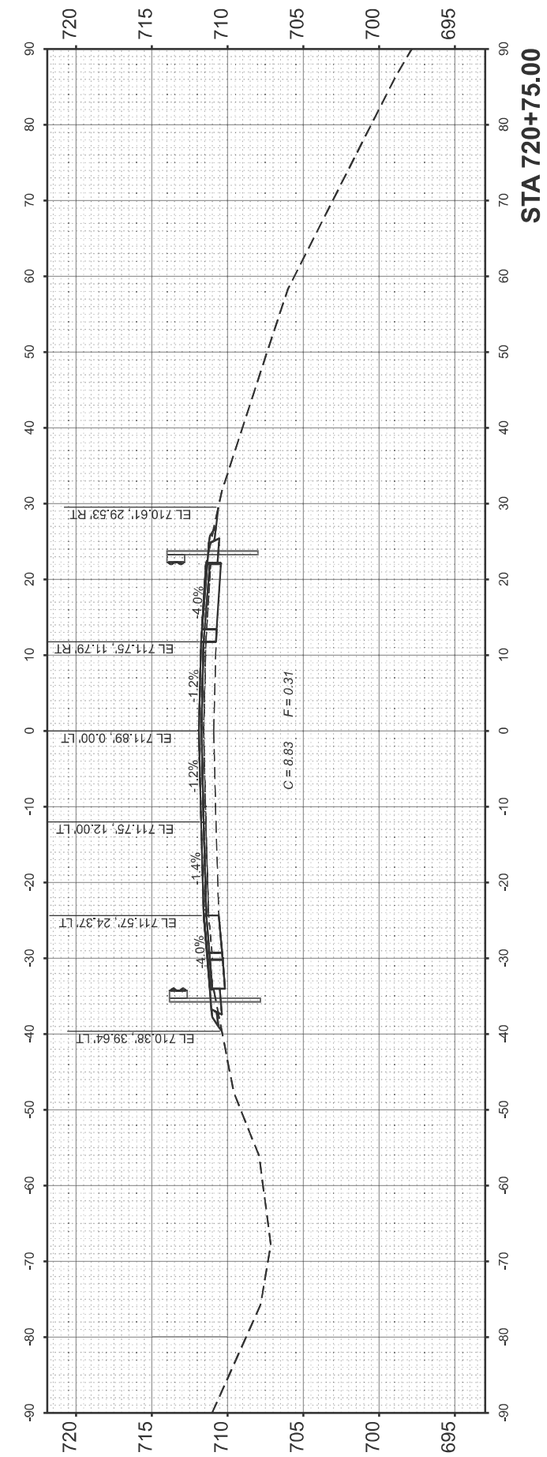

FINAL SURVEY		BY	DATE
NOTE BOOK	SURVEYED		
	PLOTTED		
	TEMPLATE		
	AREAS		
NO.	AREAS CHECKED		

ORIGINAL SURVEY		BY	DATE
NOTE BOOK	SURVEYED		
	PLOTTED		
	TEMPLATE		
	AREAS		
NO.	AREAS CHECKED		

MODEL: ExCL_I72EB - 720+75.00 [Sheet]
FILE NAME: P:\5XXX\52XX\53XX\5289 - PTB 201-037 D7 VV_HLR\Work Order #3\CADD Data\Sheets\D774705-sht-xsght.dgn

CDI CIVIL DESIGN, INC. WBE | DBE EFFINGHAM, IL LICENSE #184.003222

USER NAME = kulrich	DESIGNED -	REVISED -
	DRAWN -	REVISED -
	CHECKED -	REVISED -
PLOT DATE = 8/21/2025	DATE -	REVISED -

STATE OF ILLINOIS
DEPARTMENT OF TRANSPORTATION

CROSS SECTIONS
I-72 EAST BOUND

SCALE: 1"=10' | SHEET 1 OF 6 SHEETS | STA. | TO STA.

F.A.I. RTE.	SECTION	COUNTY	TOTAL SHEETS	SHEET NO.
72	(58-63 HVB) BR	MACON	122	117
		CONTRACT NO. 74705		
		ILLINOIS	FED. AID PROJECT	

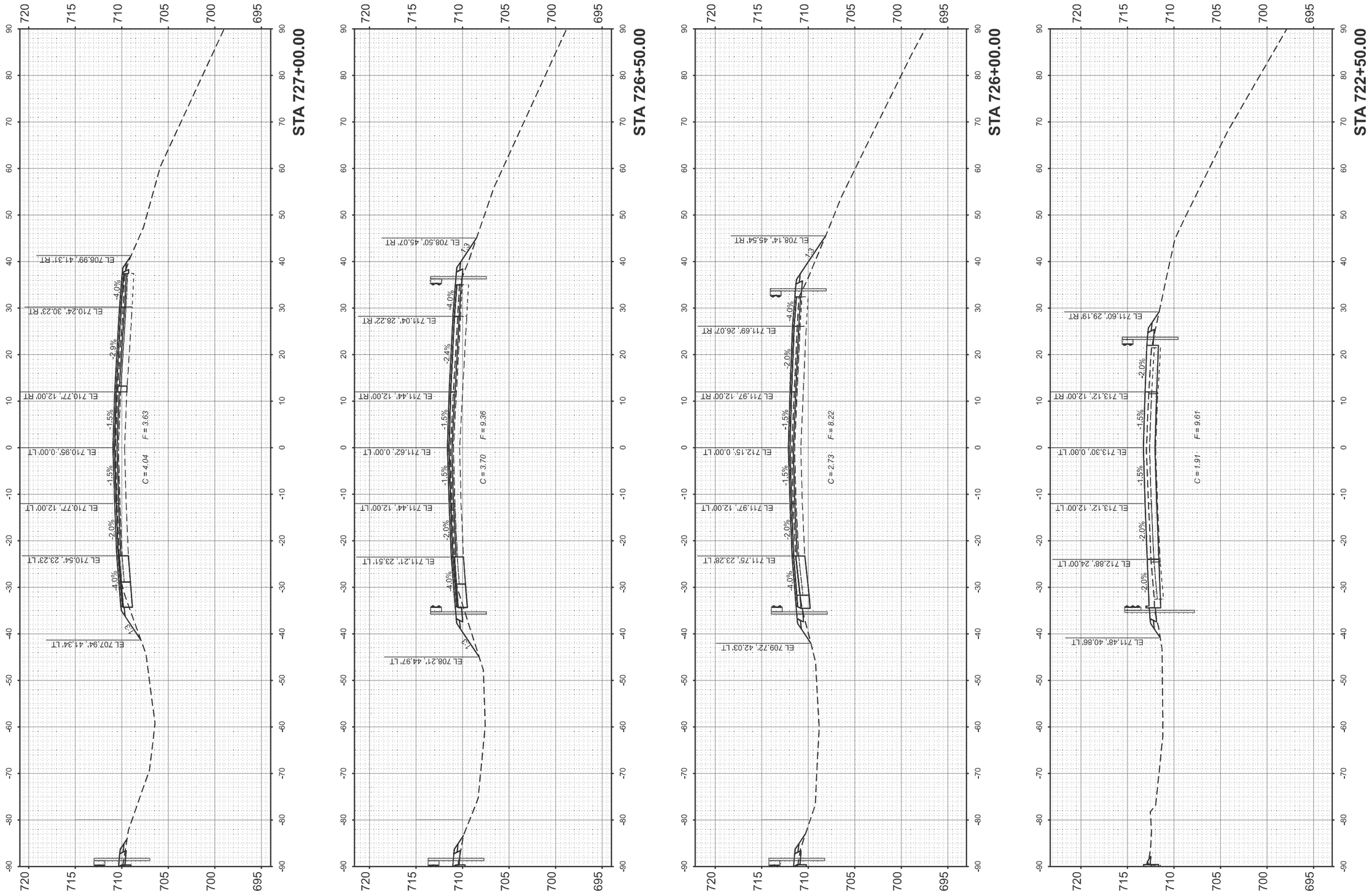

FINAL SURVEY		BY	DATE
NOTE BOOK	SURVEYED		
	PLOTTED		
	TEMPLATE		
	AREAS		
NO.	AREAS CHECKED		

ORIGINAL SURVEY		BY	DATE
NOTE BOOK	SURVEYED		
	PLOTTED		
	TEMPLATE		
	AREAS		
NO.	AREAS CHECKED		

MODEL: ExCL_I72EB - 722+50.00 [Sheet]
FILE NAME: P:\5XXX\52XX-53XX\5289 - PTB 201-037 D7 VV_HLRWork Order #3\CADD Data\Sheets\D774705-sht-xssht.dgn

CDI CIVIL DESIGN, INC. WBE | DBE EFFINGHAM, IL LICENSE #184.003222

USER NAME = kulrich	DESIGNED -	REVISED -
	DRAWN -	REVISED -
	CHECKED -	REVISED -
PLOT DATE = 8/21/2025	DATE -	REVISED -

STATE OF ILLINOIS
DEPARTMENT OF TRANSPORTATION

CROSS SECTIONS
I-72 EAST BOUND

SCALE: 1"=10' | SHEET 2 OF 6 SHEETS | STA. | TO STA.

F.A.I. RTE.	SECTION	COUNTY	TOTAL SHEETS	SHEET NO.
72	(58-63 HVB) BR	MACON	122	118
		CONTRACT NO. 74705		
		ILLINOIS	FED. AID PROJECT	

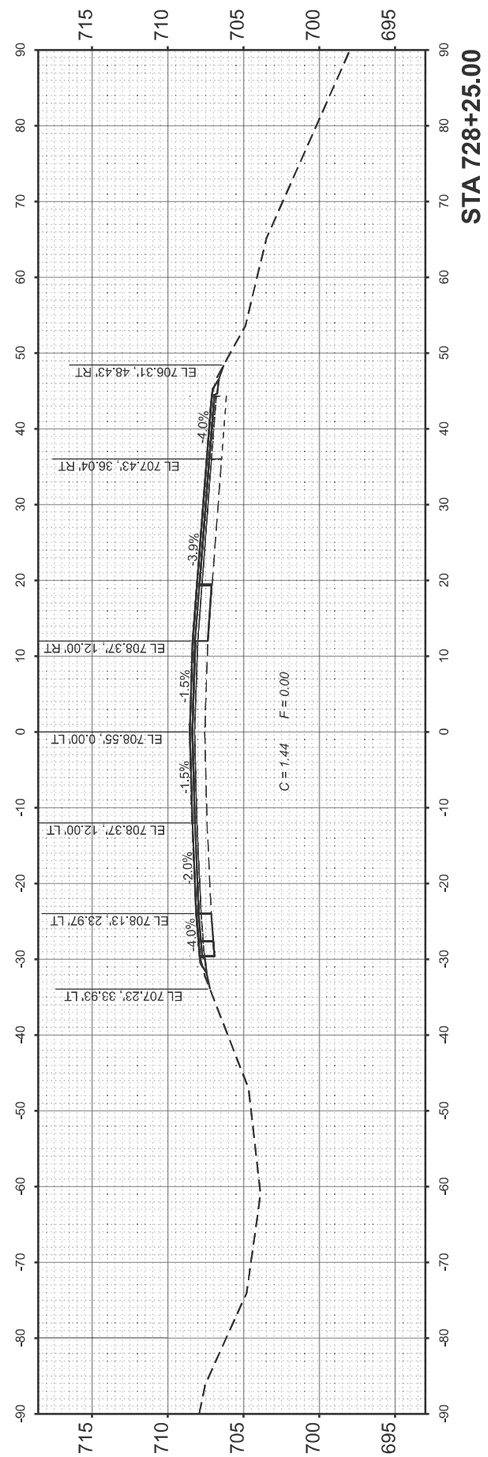

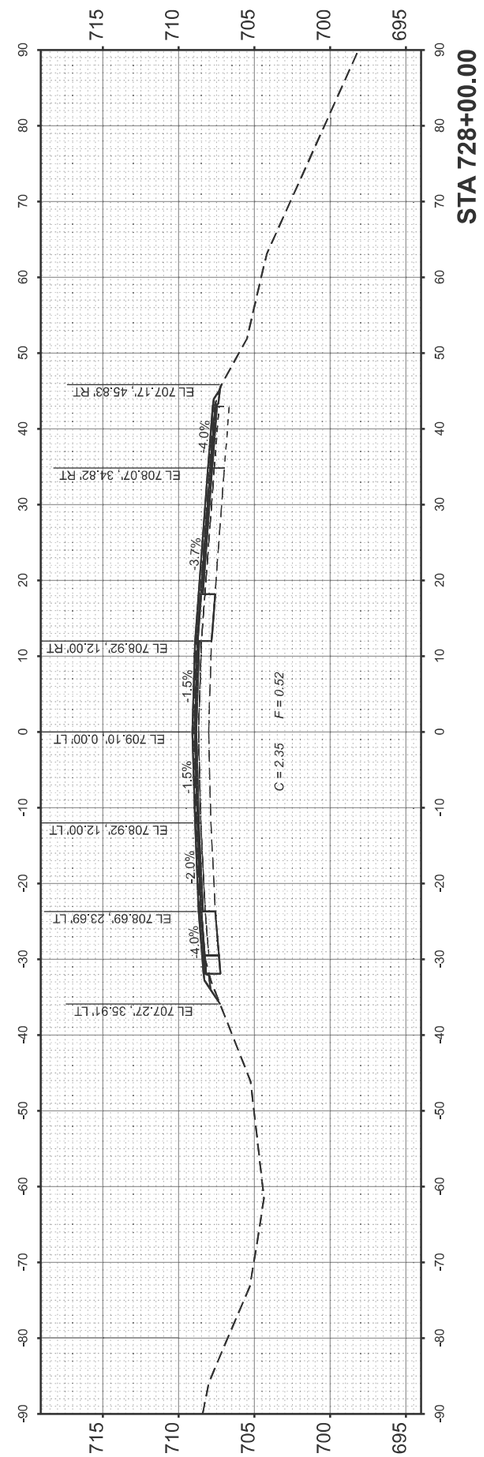

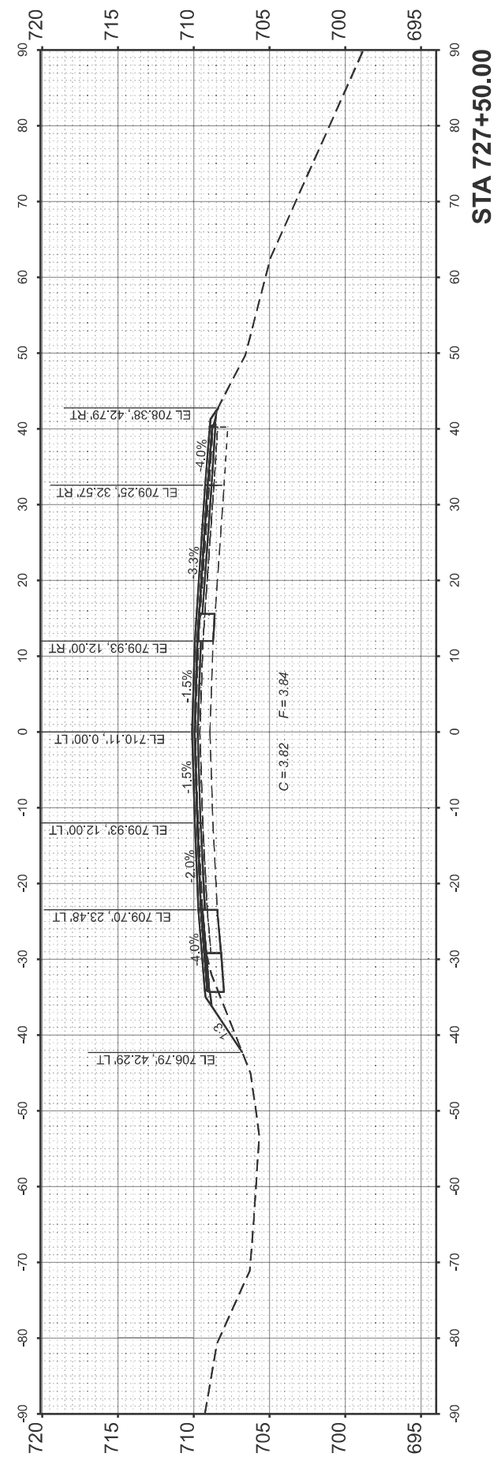

FINAL SURVEY		BY	DATE
NOTE BOOK	SURVEYED		
	PLOTTED		
	TEMPLATE		
	AREAS		
NO.	AREAS CHECKED		

ORIGINAL SURVEY		BY	DATE
NOTE BOOK	SURVEYED		
	PLOTTED		
	TEMPLATE		
	AREAS		
NO.	AREAS CHECKED		

MODEL: EXCL_I72EB - 727+50.00 [Sheet]
FILE NAME: P:\5XXX\52XX-53XX\5289 - PTB 201-037 D7 VV_HLR\Work Order #3\CADD Data\Sheets\D774705-sht-xssht.dgn

CDI
CIVIL DESIGN, INC.
WBE | DBE
EFFINGHAM, IL
LICENSE #184.003222

USER NAME = kulrich	DESIGNED -	REVISED -	
	DRAWN -	REVISED -	
	CHECKED -	REVISED -	
PLOT DATE = 8/21/2025	DATE -	REVISED -	

STATE OF ILLINOIS
DEPARTMENT OF TRANSPORTATION

CROSS SECTIONS
I-72 EAST BOUND

SCALE: 1"=10' | SHEET 3 OF 6 SHEETS | STA. | TO STA.

F.A.I. RTE.	SECTION	COUNTY	TOTAL SHEETS	SHEET NO.
72	(58-63 HVB) BR	MACON	122	119
		CONTRACT NO. 74705		
		ILLINOIS	FED. AID PROJECT	

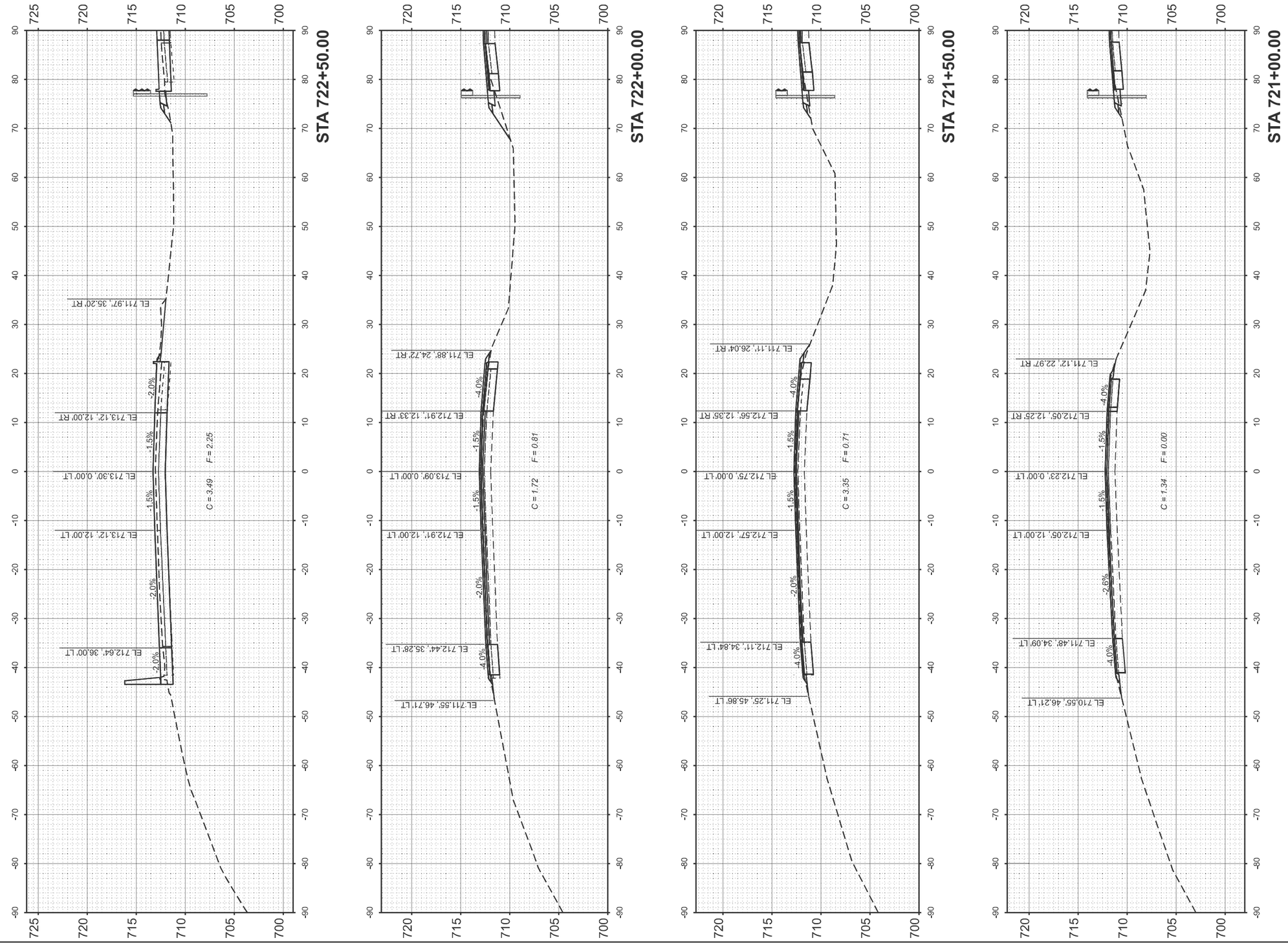

FINAL SURVEY		BY	DATE
NOTE BOOK	SURVEYED		
	PLOTTED		
	TEMPLATE		
	AREAS		
NO.	AREAS CHECKED		

ORIGINAL SURVEY		BY	DATE
NOTE BOOK	SURVEYED		
	PLOTTED		
	TEMPLATE		
	AREAS		
NO.	AREAS CHECKED		

MODEL: ExCL_I72WB - 721+00.00 [Sheet]
FILE NAME: P:\5XXX\52XX-53XX\5289 - PTB 201-037 D7 VV_HLRWork Order #3\CADD Data\Sheets\D774705-sht-xssht.dgn

CDI CIVIL DESIGN, INC. WBE | DBE EFFINGHAM, IL LICENSE #184.003222

USER NAME = kulrich	DESIGNED -	REVISED -
	DRAWN -	REVISED -
	CHECKED -	REVISED -
PLOT DATE = 8/21/2025	DATE -	REVISED -

STATE OF ILLINOIS
DEPARTMENT OF TRANSPORTATION

CROSS SECTIONS
I-72 WEST BOUND

SCALE: 1"=10' | SHEET 4 OF 6 SHEETS | STA. | TO STA.

F.A.I. RTE.	SECTION	COUNTY	TOTAL SHEETS	SHEET NO.
72	(58-63 HVB) BR	MACON	122	120
		CONTRACT NO. 74705		
		ILLINOIS	FED. AID PROJECT	

FINAL SURVEY		BY	DATE
NOTE BOOK NO.	SURVEYED		
	PLOTTED		
	TEMPLATE		
	AREAS		
	AREAS CHECKED		

ORIGINAL SURVEY		BY	DATE
NOTE BOOK NO.	SURVEYED		
	PLOTTED		
	TEMPLATE		
	AREAS		
	AREAS CHECKED		

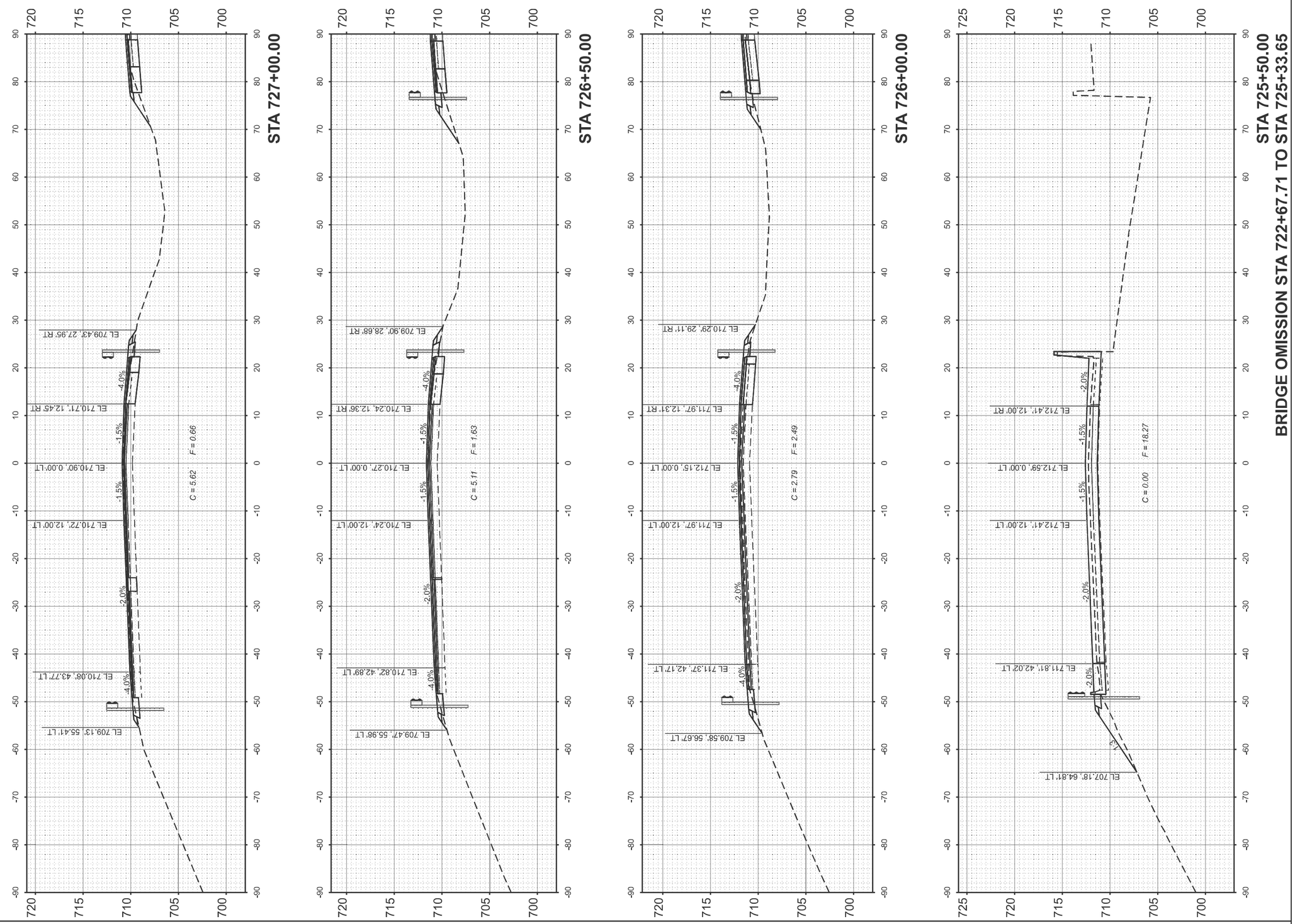

MODEL: ExCL_I72WB - 725+50.00 [Sheet]
FILE NAME: P:\5XXX\52XX\53XX\5289 - PTB 201-037 D7 VV_HLR\Work Order #3\CADD Data\Sheets\0774705-sht-xsght.dgn

CIVIL DESIGN, INC.
WBE | DBE
EFFINGHAM, IL
LICENSE #184.003222

USER NAME = kulrich	DESIGNED -	REVISED -
	DRAWN -	REVISED -
	CHECKED -	REVISED -
PLOT DATE = 8/21/2025	DATE -	REVISED -

STATE OF ILLINOIS
DEPARTMENT OF TRANSPORTATION

CROSS SECTIONS
I-72 WEST BOUND

SCALE: 1"=10' | SHEET 5 OF 6 SHEETS | STA. TO STA.

F.A.I. RTE.	SECTION	COUNTY	TOTAL SHEETS	SHEET NO.
72	(58-63 HVB) BR	MACON	122	121
		CONTRACT NO. 74705		
		ILLINOIS	FED. AID PROJECT	

FINAL SURVEY		BY	DATE
NOTE BOOK	SURVEYED		
	PLOTTED		
	TEMPLATE		
	AREAS		
NO.	AREAS CHECKED		

ORIGINAL SURVEY		BY	DATE
NOTE BOOK	SURVEYED		
	PLOTTED		
	TEMPLATE		
	AREAS		
NO.	AREAS CHECKED		

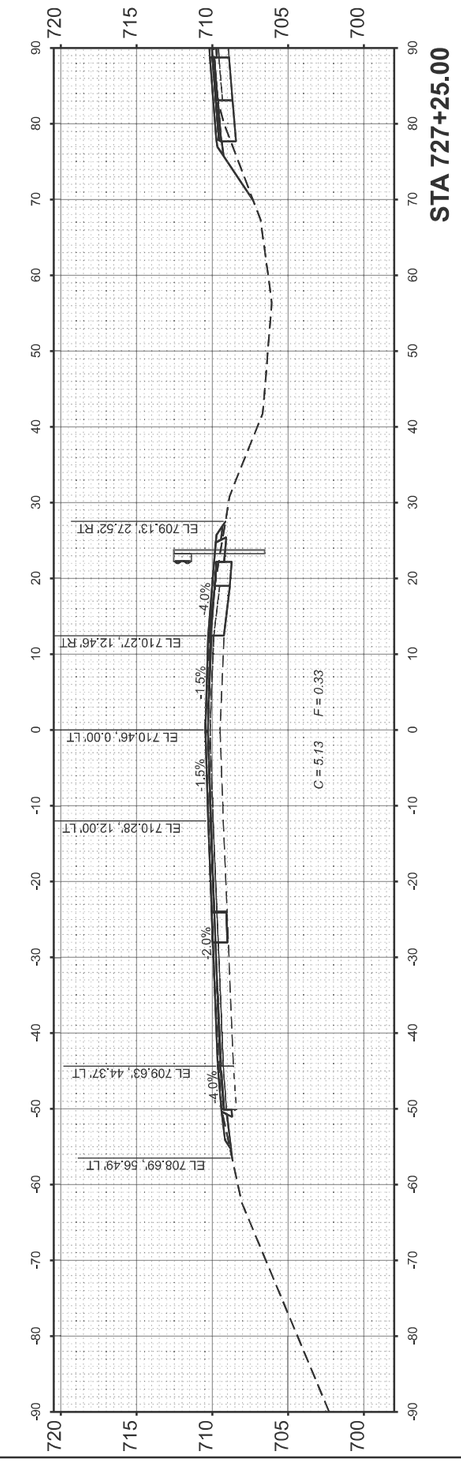

MODEL: ExCL_I72WB - 727+25.00 [Sheet]
FILE NAME: P:\5XXX\52XX\53XX\5289 - PTB 201-037 D7 VV_HLR\Work Order #3\CADD Data\Sheets\D774705-sht-xsght.dgn

CIVIL DESIGN, INC.
WBE | DBE
EFFINGHAM, IL
LICENSE #184.003222

USER NAME = kulrich	DESIGNED -	REVISED -
	DRAWN -	REVISED -
	CHECKED -	REVISED -
PLOT DATE = 8/21/2025	DATE -	REVISED -

STATE OF ILLINOIS
DEPARTMENT OF TRANSPORTATION

CROSS SECTIONS
I-72 WEST BOUND

SCALE: 1"=10' | SHEET 6 OF 6 SHEETS | STA. | TO STA.

F.A.I. RTE.	SECTION	COUNTY	TOTAL SHEETS	SHEET NO.
72	(58-63 HVB) BR	MACON	122	122
		CONTRACT NO. 74705		
	ILLINOIS	FED. AID PROJECT		