F.A.P. RTE.	SECTION	COUNTY	TOTAL SHEETS	SHEET NO.
312	130B-1	JACKSON	83	1
	ILLINOIS	CONTRACT NO. 78967		

BFW ENGINEERING & CONSULTING

STATE OF ILLINOIS
DEPARTMENT OF TRANSPORTATION

FOR INDEX OF SHEETS, SEE SHEET NO. 3
FOR SUMMARY OF QUANTITIES, SEE SHEET NO. 4-9

PROPOSED HIGHWAY PLANS

FAP ROUTE 312 (IL 3)
SECTION 130B-1
PROJECT NHPP-JN27(428)
BRIDGE REPLACEMENT
JACKSON COUNTY

C-99-082-22

D-99-062-022

LOCATION OF SECTION INDICATED THUS: -

TRAFFIC DATA

IL 3

FUNCTIONAL CLASSIFICATION: OTHER PRINCIPAL ARTERIAL
ADT: 900(2023); 940(2026)
PV, SU, MU: 82.3%, 4.4%, 13.3%
POSTED SPEED: 55 MPH

TOWNSHIPS

SAND RIDGE; T9S, R3W

BEGIN PROJECT
STA. 101+92.00

END PROJECT
STA. 106+32.00

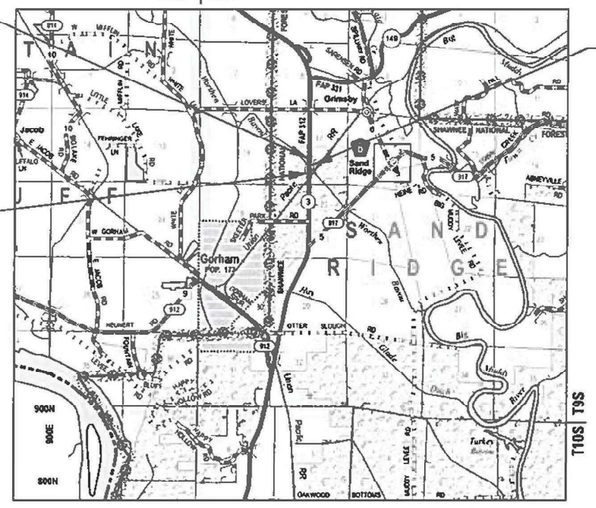

PROJECT INCLUDES
BRIDGE REPLACEMENT OF
FAP 312 (IL 3) OVER
WORTHEN BAYOU
STA 104+12.00
EX SN 039-0026
PR SN 039-0083

LOCATION MAP

SCALE (1" = 1 MILE)
0 1 2 3 MILE

GROSS LENGTH = 440.00 FT. = 0.083 MILES
NET LENGTH = 440.00 FT. = 0.083 MILES

COORDINATE SYSTEM : NORTH AMERICAN DATUM (NAD) 83
ILLINOIS STATE PLANE WEST ZONE

J.U.L.I.E.
JOINT UTILITY LOCATION INFORMATION FOR EXCAVATION
1-800-892-0123
OR 811

PROJECT MANAGER: EHREN KIRBY (618)351-5227
Ehren.Kirby@illinois.gov
PROJECT ENGINEER: JOHN NEGANGARD (217)670-1533
jnegangard@bfwengineers.com
CONTRACT NO. 78967

JOHN C. NEGANGARD
062-047264
LICENSED PROFESSIONAL ENGINEER OF ILLINOIS

STATE OF ILLINOIS
DEPARTMENT OF TRANSPORTATION

SUBMITTED Nov 24 20 25
Lora S. Ramsey
REGION FIVE ENGINEER

January 23 20 26
ENGINEER OF DESIGN AND ENVIRONMENT

January 23 20 26
DIRECTOR OF HIGHWAYS PROJECT IMPLEMENTATION

PRINTED BY THE AUTHORITY
OF THE STATE OF ILLINOIS

Prepared By: Susan Poe
DISTRICT STUDIES & PLANS ENGINEER

Examined By: Nancy Heil HFP
DISTRICT LAND ACQUISITION ENGINEER

Examined By:
DISTRICT PROGRAM DEVELOPMENT ENGINEER

Examined By:
DISTRICT OPERATIONS ENGINEER

Examined By:
DISTRICT PROJECT IMPLEMENTATION ENGINEER

Examined By:
DISTRICT CONSTRUCTION ENGINEER

Examined By:
DISTRICT MATERIALS ENGINEER

MODEL: Sheet 2
FILE NAME: c:\shelby_ws\d0209277\D978567-sht-GenNote.dgn

BFW ENGINEERING & CONSULTING

USER NAME = sskinner	DESIGNED -	REVISED -	
	DRAWN -	REVISED -	
PLOT SCALE = 0.1667 ' / in.	CHECKED -	REVISED -	
PLOT DATE = 11/12/2025	DATE -	REVISED -	

STATE OF ILLINOIS
DEPARTMENT OF TRANSPORTATION

SIGNATURE SHEET
IL 3

SCALE: N.T.S. | SHEET 1 OF 1 SHEETS | STA. | TO STA.

F.A.P. RTE.	SECTION	COUNTY	TOTAL SHEETS	SHEET NO.
312	130B-1	JACKSON	83	2
		CONTRACT NO. 78967		
		ILLINOIS FED. AID PROJECT		

INDEX OF SHEETS

SHEET #	DESCRIPTION
1	COVER SHEET
2	D9 SIGNATURE SHEET
3	INDEX OF SHEETS, LIST OF HIGHWAY STANDARDS, GENERAL NOTES, COMMITMENTS AND MIX TABLES
4-9	SUMMARY OF QUANTITIES
10-11	TYPICAL SECTIONS
12-18	SCHEDULE OF QUANTITIES
19	ALIGNMENT, TIES & BENCHMARKS
20	PLAN AND PROFILE SHEET
21	GUARDRAIL LAYOUT PLAN
22-29	TEMPORARY TRAFFIC CONTROL PLANS
30-60	STRUCTURAL DETAILS (SN 039-0083)
61-69	EXISTING BRIDGE PLANS (SN 039-0026)
70	EROSION CONTROL PLAN
71	HMA BUTT JOINT DETAIL
72-83	CROSS SECTIONS

LIST OF HIGHWAY STANDARDS

STANDARD NO.	DESCRIPTION
000001-09	STANDARD SYMBOLS, ABBREVIATIONS AND PATTERNS
001001-02	AREAS OF REINFORCEMENT BARS
001006	DECIMAL OF AN INCH AND OF A FOOT
280001-07	TEMPORARY EROSION CONTROL SYSTEMS
420001-11	PAVEMENT JOINTS
420401-13	PAVEMENT CONNECTOR (PCC) FOR BRIDGE APPROACH SLAB
515001-04	NAME PLATES FOR BRIDGES
601101-02	CONCRETE HEADWALL FOR PIPE UNDERDRAINS
630001-13	STEEL PLATE BEAM GUARDRAIL
630201-07	PCC/HMA STABILIZATION AT STEEL PLATE BEAM GUARDRAIL
630301-09	SHOULDER WIDENING FOR TYPE 1 (SPECIAL) GUARDRAIL TERMINALS
631031-18	TRAFFIC BARRIER TERMINAL, TYPE 6
701001-02	OFF-ROAD OPERATIONS, 2L, 2W, MORE THAN 15' (4.5 m) AWAY
701006-05	OFF-ROAD OPERATIONS, 2L, 2W, 15' (4.5 M) TO 24' (600 mm) FROM PAVEMENT EDGE
701011-04	OFF-ROAD MOVING OPERATIONS, 2L, 2W, DAY ONLY
701201-05	LANE CLOSURE, 2L, 2W, DAY ONLY, FOR SPEEDS > 45 MPH
701321-19	LANE CLOSURE, 2L, 2W, BRIDGE REPAIR WITH BARRIER
701326-04	LANE CLOSURE, 2L, 2W, PAVEMENT WIDENING, FOR SPEEDS > 45 MPH
701901-11	TRAFFIC CONTROL DEVICES
704001-08	TEMPORARY CONCRETE BARRIER
725001-01	OBJECT AND TERMINAL MARKERS
780001-05	TYPICAL PAVEMENT MARKINGS
782006-01	GUARDRAIL AND BARRIER WALL REFLECTOR MOUNTING DETAILS
862001-01	UNINTERRUPTABLE POWER SUPPLY (UPS)

GENERAL NOTES

1. FACTORS USED FOR ESTIMATING PLAN QUANTITIES ARE AS FOLLOWS AND SHALL NOT BE USED FOR THE BASIS OF FINAL QUANTITIES:

ITEMS	APPLICATION RATES
ALL HOT MIX ASPHALT	2.016 TONS/CU. YD.
ALL AGGREGATE	2.05 TONS/CU. YD.
RIPRAP	1.50 TONS/CU. YD.
EARTH	110 LBS/CU. FT.

2. AT ALL LOCATIONS WHERE PROPOSED HOT-MIX ASPHALT SURFACE PAVEMENT JOINS AN EXISTING HOT-MIX ASPHALT SURFACE OR CONCRETE PAVEMENT, A FULL DEPTH SAW CUT SHALL BE CONSTRUCTED AS PART OF THE HOT-MIX ASPHALT SURFACE REMOVAL. THE COST OF THE SAW CUT SHALL BE CONSIDERED AS INCLUDED IN THE COST OF THE HOT-MIX ASPHALT SURFACE REMOVAL PAY ITEM.

3. THE QUANTITY OF SHORT TERM PAVEMENT MARKING SHOWN IN THE PLANS IS BASED ON ONE APPLICATION EACH FOR THE HMA SURFACE REMOVAL, BINDER COURSE, AND SURFACE COURSE

COMMITMENTS:

TREE REMOVAL SHALL BE COMPLETED BETWEEN OCTOBER 1ST TO MARCH 31ST OF ANY GIVEN YEAR DURING CONSTRUCTION.

LOCATION:	HMA SHLD 6" (SQYD), BOTTOM LIFT 1 AT 4"; HMA SHLD 10" (SQYD), BOTTOM LIFTS, 2 AT 4"	HMA SURFACE COURSE (TON), TOP LIFT, 1 AT 1½"; HMA SHLD 10" (SQYD), TOP LIFT, 1 AT 2"	HMA SHLD (TON), TOP LIFT, 1 AT 1½"; HMA SHLD 6" (SQYD), TOP LIFT, 1 AT 2"
MIXTURE USE(S):	HOT-MIX ASPHALT BINDER COURSE, IL-19mm, N70	HOT-MIX ASPHALT SURFACE COURSE, MIX "C", N70	HOT-MIX ASPHALT SURFACE COURSE, MIX "C", N30
AG/PG	PG64-22	PG64-22	PG64-22
DESIGN AIR VOIDS:	4.0%, 70 GYRATION DESIGN	4.0%, 70 GYRATION DESIGN	4.0%, 30 GYRATION DESIGN
MIXTURE COMPOSITION:	IL 19.0mm	IL 9.5mm	IL 9.5L
FRICTION AGGREGATE:	NONE	MIX C	NONE
MIXTURE WEIGHT:	112 LBS/SQ YD/INCH	112 LBS/SQ YD/INCH	112 LBS/SQ YD/INCH
QUALITY MANAGEMENT PROGRAM:	QC/QA	QC/QA	QC/QA
SUBLOT SIZE:	3,000 TONS	3,000 TONS	3,000 TONS
MATERIAL TRANSFER DEVICE:	NO	NO	NO

SUMMARY OF QUANTITIES

CONSTR. CODE
0010
80% FED 20% STATE
BRIDGE
PR SN 039-0083
RURAL

CODE NO.	ITEM	UNIT	TOTAL QUANTITY	
20100500	TREE REMOVAL, ACRES	ACRE	0.1	0.1
20200100	EARTH EXCAVATION	CU YD	13	13
20400800	FURNISHED EXCAVATION	CU YD	139	139
20300100	CHANNEL EXCAVATION	CU YD	1407	1407
25000200	SEEDING, CLASS 2	ACRE	0.3	0.3
25000400	NITROGEN FERTILIZER NUTRIENT	POUND	26	26
25000500	PHOSPHORUS FERTILIZER NUTRIENT	POUND	26	26
25000600	POTASSIUM FERTILIZER NUTRIENT	POUND	26	26
25000700	AGRICULTURAL GROUND LIMESTONE	TON	1	1
25100115	MULCH, METHOD 2	ACRE	0.1	0.1
25100630	EROSION CONTROL BLANKET	SQ YD	810	810
28000400	PERIMETER EROSION BARRIER	FOOT	475	475
28000250	TEMPORARY EROSION CONTROL SEEDING	POUND	100	100
28100105	STONE RIPRAP, CLASS A3	SQ YD	53	53

* SPECIALTY ITEM

SUMMARY OF QUANTITIES

CONSTR. CODE 0010
80% FED 20% STATE
BRIDGE
PR SN 039-0083
RURAL

CODE NO.	ITEM	UNIT	TOTAL QUANTITY	RURAL
28100107	STONE RIPRAP, CLASS A4	SQ YD	1242	1242
28200200	FILTER FABRIC	SQ YD	1242	1242
31101400	SUBBASE GRANULAR MATERIAL, TYPE B 6"	SQ YD	290	290
40600295	POLYMER BITUMINOUS MATERIALS (TACK COAT)	POUND	522	522
40600370	LONGITUDINAL JOINT SEALANT	FOOT	163	163
40600990	TEMPORARY RAMP	SQ YD	53	53
40604052	HOT-MIX ASPHALT SURFACE COURSE, IL-9.5, MIX "C", N70	TON	37	37
42000080	PAVEMENT CONNECTOR (PCC) FOR BRIDGE APPROACH SLAB	SQ YD	270	270
42001300	PROTECTIVE COAT	SQ YD	270	270
44000100	PAVEMENT REMOVAL	SQ YD	543	543
44000155	HOT-MIX ASPHALT SURFACE REMOVAL, 1 1/2"	SQ YD	725	725
44004250	PAVED SHOULDER REMOVAL	SQ YD	432	432
44200050	WELDED WIRE REINFORCEMENT	SQ YD	270	270
48203021	HOT-MIX ASPHALT SHOULDERS, 6"	SQ YD	124	124

* SPECIALTY ITEM

REV - MS

SUMMARY OF QUANTITIES

CONSTR. CODE
0010
80% FED 20% STATE
BRIDGE
PR SN 039-0083
RURAL

CODE NO.	ITEM	UNIT	TOTAL QUANTITY	
48203037	HOT-MIX ASPHALT SHOULDERS, 10"	SQ YD	432	432
48203100	HOT-MIX ASPHALT SHOULDERS	TON	24	24
50100100	REMOVAL OF EXISTING STRUCTURES	EACH	1	1
50200100	STRUCTURE EXCAVATION	CU YD	560	560
50200300	COFFERDAM EXCAVATION	CU YD	136	136
50201121	COFFERDAM (TYPE 2) (LOCATION - 1)	EACH	1	1
50300100	FLOOR DRAINS	EACH	18	18
50300225	CONCRETE STRUCTURES	CU YD	189.7	189.7
50300255	CONCRETE SUPERSTRUCTURE	CU YD	261.2	261.2
50300260	BRIDGE DECK GROOVING	SQ YD	908	908
50300265	SEAL COAT CONCRETE	CU YD	73.7	73.7
50300300	PROTECTIVE COAT	SQ YD	1129	1129
50301350	CONCRETE SUPERSTRUCTURE (APPROACH SLAB)	CU YD	117	117
50500105	FURNISHING AND ERECTING STRUCTURAL STEEL	L SUM	1	1

* SPECIALTY ITEM

SUMMARY OF QUANTITIES

CONSTR. CODE
0010
80% FED 20% STATE
PR SN 039-0083
SN 039-0083
RURAL

CODE NO.	ITEM	UNIT	TOTAL QUANTITY	RURAL
50500505	STUD SHEAR CONNECTORS	EACH	3535	3535
50800205	REINFORCEMENT BARS, EPOXY COATED	POUND	113630	113630
50800515	BAR SPLICERS	EACH	862	862
51200963	FURNISHING METAL SHELL PILES 16" X 0.375"	FOOT	2176	2176
51202305	DRIVING PILES	FOOT	2176	2176
51203200	TEST PILE METAL SHELLS	EACH	2	2
51500100	NAME PLATES	EACH	1	1
52100520	ANCHOR BOLTS, 1"	EACH	36	36
52200010	TEMPORARY SHEET PILING	SQ FT	698	698
58600101	GRANULAR BACKFILL FOR STRUCTURES	CU YD	348	348
60100060	CONCRETE HEADWALLS FOR PIPE DRAINS	EACH	4	4
60146304	PIPE UNDERDRAINS FOR STRUCTURES 4"	FOOT	200	200
* 63000001	STEEL PLATE BEAM GUARDRAIL, TYPE A, 6 FOOT POSTS	FOOT	50	50
* 63100085	TRAFFIC BARRIER TERMINAL, TYPE 6	EACH	4	4

* SPECIALTY ITEM

SUMMARY OF QUANTITIES

CONSTR. CODE
0010
80% FED 20% STATE
BRIDGE
PR SN 039-0083
RURAL

	CODE NO.	ITEM	UNIT	TOTAL QUANTITY	
*	63100167	TRAFFIC BARRIER TERMINAL, TYPE 1 (SPECIAL) TANGENT	EACH	4	4
	63200310	GUARDRAIL REMOVAL	FOOT	532	532
	67000400	ENGINEER'S FIELD OFFICE, TYPE A	CAL MO	12	12
	67100100	MOBILIZATION	L SUM	1	1
	70100405	TRAFFIC CONTROL AND PROTECTION, STANDARD 701321	EACH	1	1
	70100450	TRAFFIC CONTROL AND PROTECTION, STANDARD 701201	L SUM	1	1
	70100500	TRAFFIC CONTROL AND PROTECTION, STANDARD 701326	L SUM	1	1
	70103815	TRAFFIC CONTROL SURVEILLANCE	CAL DA	5	5
	70106500	TEMPORARY BRIDGE TRAFFIC SIGNALS	EACH	1	1
	70106700	TEMPORARY RUMBLE STRIPS	EACH	6	6
	70107025	CHANGEABLE MESSAGE SIGN	CAL DA	28	28
	70300100	SHORT TERM PAVEMENT MARKING	FOOT	170	170
	70300150	SHORT TERM PAVEMENT MARKING REMOVAL	SQ FT	47	47
	70400100	TEMPORARY CONCRETE BARRIER	FOOT	563	563

* SPECIALTY ITEM

SUMMARY OF QUANTITIES

CONSTR. CODE
0010
80% FED 20% STATE
BRIDGE
PR SN 039-0083
RURAL

	CODE NO.	ITEM	UNIT	TOTAL QUANTITY	
	70400125	PINNING TEMPORARY CONCRETE BARRIER	EACH	66	66
	70400200	RELOCATE TEMPORARY CONCRETE BARRIER	FOOT	463	463
	70600251	IMPACT ATTENUATORS, TEMPORARY (NON- REDIRECTIVE, NARROW), TEST LEVEL 3	EACH	2	2
	70600352	IMPACT ATTENUATORS, RELOCATE (NON- REDIRECTIVE,NARROW), TEST LEVEL 3	EACH	2	2
*	72501000	TERMINAL MARKER - DIRECT APPLIED	EACH	4	4
*	78001110	PAINT PAVEMENT MARKING - LINE 4"	FOOT	2130	2130
*	78200005	GUARDRAIL REFLECTORS, TYPE A	EACH	4	4
*	78200010	BARRIER WALL REFLECTORS, TYPE B	EACH	12	12
	78300200	RAISED REFLECTIVE PAVEMENT MARKER REMOVAL	EACH	11	11
	78300201	PAVEMENT MARKING REMOVAL - GRINDING	SQ FT	425	425
*	86200300	UNINTERRUPTABLE POWER SUPPLY, EXTENDED	EACH	1	1
	X5080530	BAR TERMINATORS	EACH	614	614
	Z0013798	CONSTRUCTION LAYOUT	L SUM	1	1
	Z0048665	RAILROAD PROTECTIVE LIABILITY INSURANCE	L SUM	1	1

* SPECIALTY ITEM

REV - MS

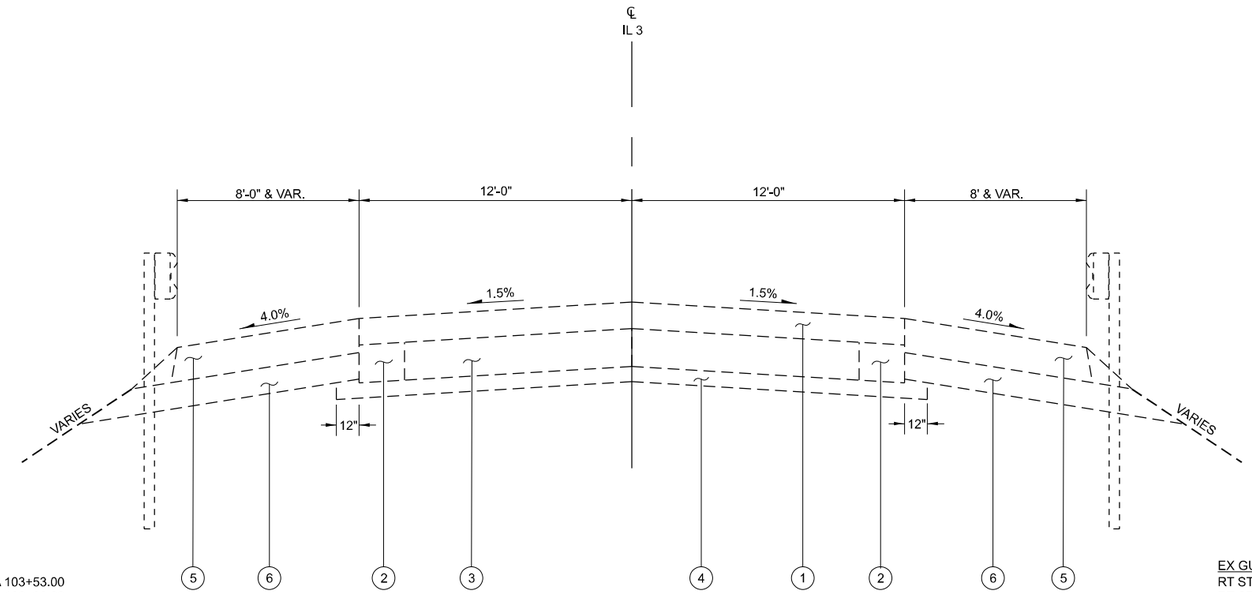

EX GUARDRAIL/ TBT
LT STA 102+22.00 TO LT STA 103+53.00
LT STA 104+97.00 TO LT STA 106+30.00

EX GUARDRAIL/ TBT
RT STA 101+94.00 TO RT STA 103+26.00
RT STA 104+71.00 TO RT STA 106+02.00

IL 3 EXISTING TYPICAL SECTION

APPROACH PAVEMENT

STA 101+92.00 TO STA 103+09.52
STA 103+09.52 TO STA 103+27.42 - EX PCC BRIDGE APPROACH PAVEMENT WITH 2.25" HMA SURF. (24.00' WIDE)
STA 103+27.42 TO STA 104+39.75 - EX PCC BRIDGE APPROACH PAVEMENT WITH 2.25" HMA SURF. (33.67' WIDE)
STA 104+39.75 TO STA 104+84.25 - EX BRIDGE
STA 104+84.25 TO STA 104+96.58 - EX PCC BRIDGE APPROACH PAVEMENT WITH 2.25" HMA SURF. (33.67' WIDE)
STA 104+96.58 TO STA 105+14.48 - EX PCC BRIDGE APPROACH PAVEMENT WITH 2.25" HMA SURF. (24.00' WIDE)
STA 105+14.48 TO STA 106+32.00

EXISTING LEGEND

1. BITUMINOUS CONCRETE SURFACE COURSE, 7"
2. PCC BASE COURSE WIDENING, 10"
3. PORTLAND CEMENT CONCRETE PAVEMENT, 10"
4. SUB-BASE GRANULAR MATERIAL, 4"
5. HMA SHOULDER, 9"
6. SUB-BASE GRANULAR MATERIAL, 7"

MODEL: Existing Typical Section 1
FILE NAME: pw://bfwms-pw.bentley.com:bfwms-pw-01/Documents/BFW/PROJECTS/2025 PROJECTS/25152 - IDOT D9 PTB199-038 WO#20 IL 3 Bridge Replacement/25152/IDOT/CAD_Sheets/D978967-sht-Typical.dgn

BFW ENGINEERING & CONSULTING

USER NAME = sskinner	DESIGNED -	REVISED -	
	DRAWN -	REVISED -	
PLOT SCALE = 0.16666633 ' / in.	CHECKED -	REVISED -	
PLOT DATE = 11/12/2025	DATE -	REVISED -	

STATE OF ILLINOIS
DEPARTMENT OF TRANSPORTATION

TYPICAL SECTION
IL 3

SCALE: N.T.S. | SHEET 1 OF 2 SHEETS | STA. 101+92.00 TO STA. 106+32.00

F.A.P. RTE.	SECTION	COUNTY	TOTAL SHEETS	SHEET NO.
312	130B-1	JACKSON	83	10

CONTRACT NO. 78967
ILLINOIS | FED. AID PROJECT

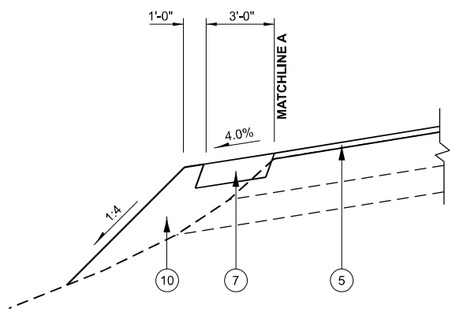

MATCHLINE A

APPROACH PAVEMENT - SHOULDER

LT STA 102+40.00 TO LT STA 102+47.26
LT STA 102+47.26 TO LT STA 103+22.14 - PR GUARDRAIL / TBT
LT STA 105+35.42 TO LT STA 106+32.38 - PR GUARDRAIL / TBT
LT STA 106+32.38 TO LT STA 106+40.00

RT STA 101+85.00 TO RT STA 101+91.67
RT STA 101+91.67 TO RT STA 102+88.58 - PR GUARDRAIL / TBT
RT STA 105+01.86 TO RT STA 105+76.74 - PR GUARDRAIL / TBT
RT STA 105+76.74 TO RT STA 105+85.00

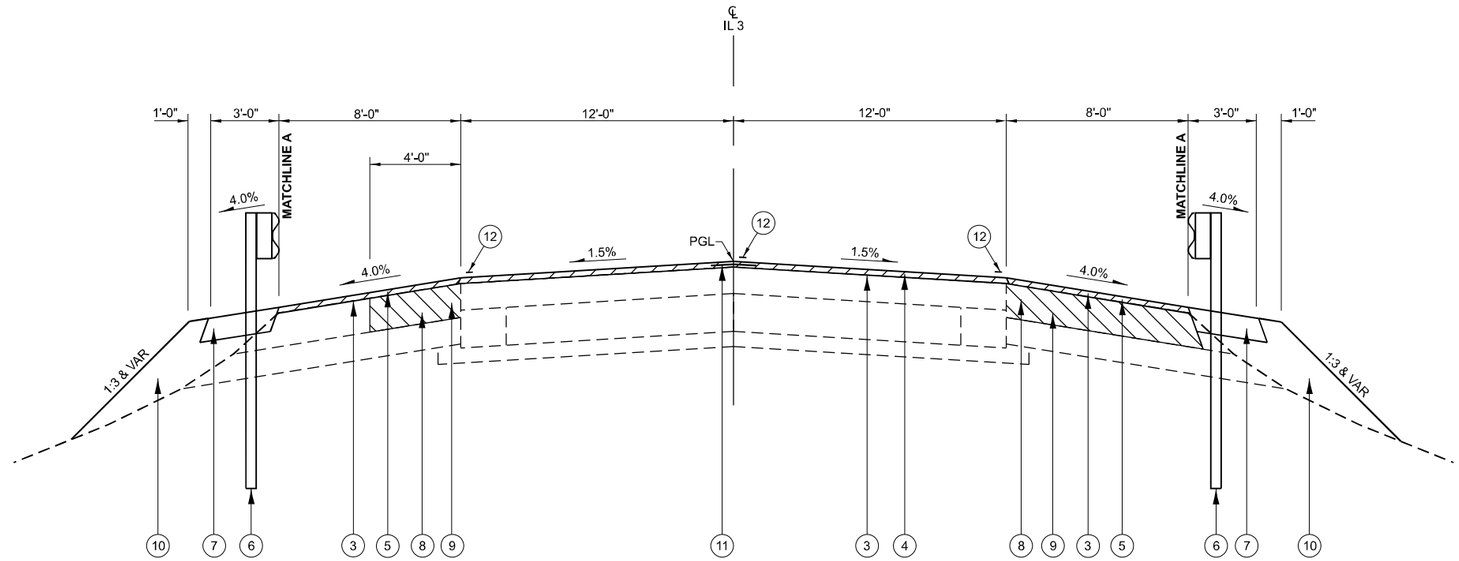

IL 3 PROPOSED TYPICAL SECTION

PAVEMENT - GUARDRAIL

STA 101+92.00 TO STA 102+73.58
STA 105+50.42 TO STA 106+32.00

NOTE: SEE TRAFFIC CONTROL PLANS FOR SHOULDER REMOVAL AND REPLACEMENT LOCATIONS.

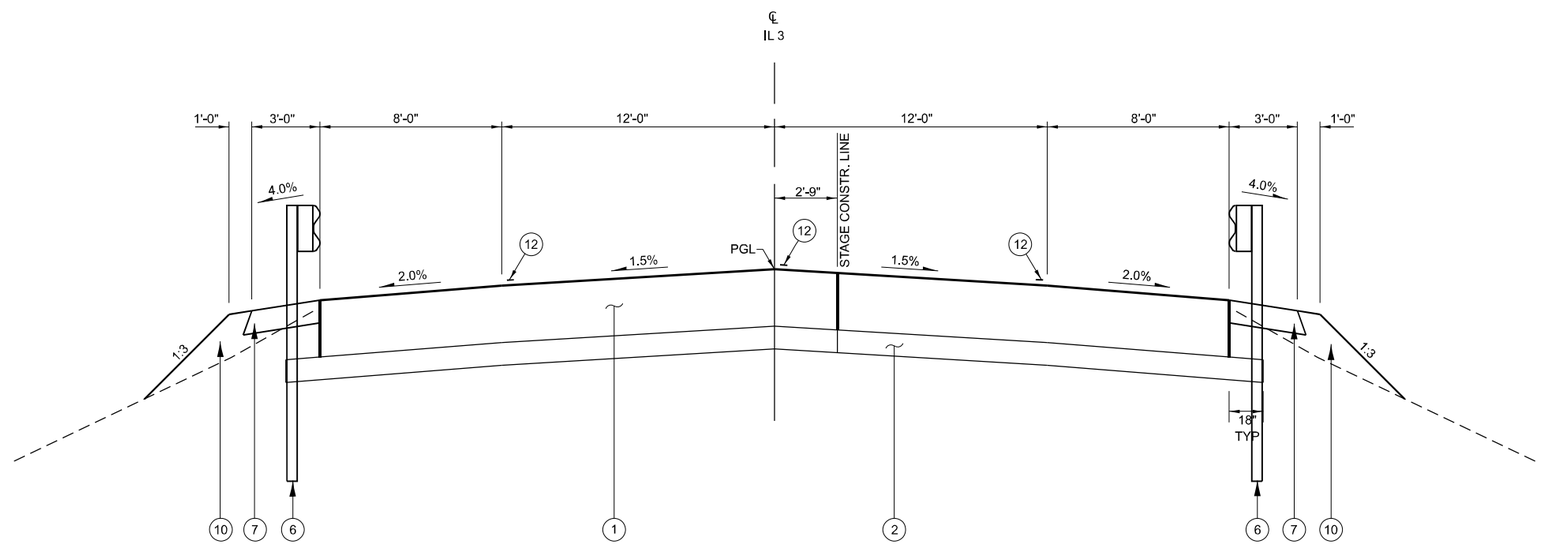

IL 3 PROPOSED TYPICAL SECTION

PCC CONNECTOR PAVEMENT

STA 102+73.58 TO STA 103+03.90 - PR PCC PAVEMENT CONNECTOR (SEE STD 420401)
STA 103+03.90 TO STA 105+20.10 - BRIDGE OMISSION
STA 105+20.10 TO STA 105+50.42 - PR PCC PAVEMENT CONNECTOR (SEE STD 420401)

PROPOSED LEGEND

1. PAVEMENT CONNECTOR (PCC) FOR BRIDGE APPROACH SLAB (STD 420401)
2. SUB-BASE GRANULAR MATERIAL, TYPE B, 6"
3. HMA SURFACE REMOVAL, 1½"
4. HMA SURFACE COURSE, 1½"
5. HMA SHOULDERS, 1½"
6. GUARDRAIL / TERMINAL (SEE PLANS & SCHEDULES FOR LOCATIONS)
7. HMA SHOULDERS, 6"
8. PAVED SHOULDER REMOVAL
9. HMA SHOULDERS, 10"
10. EARTH EMBANKMENT
11. LONGITUDINAL JOINT SEALANT
12. PAVEMENT MARKING, LINE

BFW ENGINEERING & CONSULTING

USER NAME = sskinner	DESIGNED -	REVISED -	
	DRAWN -	REVISED -	
PLOT SCALE = 0.16666633 ' / in.	CHECKED -	REVISED -	
PLOT DATE = 11/12/2025	DATE -	REVISED -	

STATE OF ILLINOIS
DEPARTMENT OF TRANSPORTATION

TYPICAL SECTION
IL 3

SCALE: N.T.S. | SHEET 2 OF 2 SHEETS | STA. 101+92.00 TO STA. 106+32.00

F.A.P. RTE.	SECTION	COUNTY	TOTAL SHEETS	SHEET NO.
312	130B-1	JACKSON	83	11

CONTRACT NO. 78967

ILLINOIS | FED. AID PROJECT

SCHEDULE OF QUANTITIES

TREE REMOVAL SCHEDULE				
LOCATION				TREE REMOVAL, ACRES
LT/RT	STA	TO	STA	(ACRE)
JACKSON COUNTY				
PRE-STAGE 1				
IL 3				
RT	102+55.00		103+41.00	0.011
RT	103+63.00		104+46.00	0.037
LT	103+76.00		104+81.00	0.050
LT	105+22.00		105+98.00	0.006
TOTAL =				0.1

MODEL: Schedule Sheet 1
FILE NAME: pw://bfwms-pw.bentley.com:bfwms-pw-01/Documents/BFW/PROJECTS/2025 PROJECTS/25152 - IDOT D9 PTB199-038 WO#20 IL 3 Bridge Replacement/25152/IDOT/CAD_Sheets/D978967-sht-Schedule.dgn

BFW ENGINEERING & CONSULTING

USER NAME = ShelbySkinner	DESIGNED -	REVISED -	
	DRAWN -	REVISED -	
PLOT SCALE = $SCALE$	CHECKED -	REVISED -	
PLOT DATE = 11/24/2025	DATE -	REVISED -	

STATE OF ILLINOIS
DEPARTMENT OF TRANSPORTATION

SCHEDULE OF QUANTITIES
IL 3

SCALE: N.T.S. | SHEET 1 OF 7 SHEETS | STA. | TO STA.

F.A.P. RTE.	SECTION	COUNTY	TOTAL SHEETS	SHEET NO.
312	130B-1	JACKSON	83	12

CONTRACT NO. 78967

ILLINOIS | FED. AID PROJECT

SCHEDULE OF QUANTITIES

EARTHWORK SCHEDULE

LOCATION				EARTH EXCAVATION (CUT FROM CROSS SECTIONS)	CHANNEL EXCAV (ASSUMED NOT FIT FOR EMBANKMENT PURPOSES)	SHRINKAGE FACTOR FOR EARTH EXCAVATION	EARTH EXCAVATION ADJUSTED FOR EMBANKMENT	EMBANKMENT (CUT FROM CROSS SECTIONS)	EARTHWORK BALANCE WASTE (+) SHORTAGE (-)	SHRINKAGE FACTOR FOR BORROW EXCAVATION	BORROW EXCAVATION	FURNISHED EXCAVATION (PAY ITEM SINCE BORROW IS < 5000 CY, PER D9 POLICY)
LT/RT	STA	TO	STA	(CU YD)	(CU YD)	(%)	(CU YD)	(CU YD)	(CU YD)	(%)	(CU YD)	(CU YD)
JACKSON COUNTY												
STAGE 1												
IL 3												
RT	101+00.00		103+38.00	4.4	0.0	25%	3.3	38.3	-35.0	25%	46.7	35.0
RT	104+48.00		107+00.00	1.7	0.0	25%	1.3	13.8	-12.5	25%	16.7	12.5
WORTHEN BAYOU												
	8+60.00		10+50.00	0.0	648.7	25%	0.0	41.1	-41.1	25%	54.8	41.1
SUB-TOTAL =				6.1	648.7	25%	4.6	93.2	-88.7	25%	118.2	88.7
STAGE 2												
IL 3												
LT	101+00.00		103+95.00	3.5	0.0	25%	2.6	43.2	-40.5	25%	54.0	40.5
LT	104+86.00		107+00.00	3.0	0.0	25%	2.2	6.5	-4.3	25%	5.7	4.3
WORTHEN BAYOU												
	9+50.00		11+50.00	0.0	758.0	25%	0.0	5.6	-5.6	25%	7.4	5.6
SUB-TOTAL =				6.5	758.0	25%	4.9	55.2	-50.3	25%	67.1	50.3
TOTAL =				13	1407	25%	9	148	-139	25%	185	139

NOTE:
EXCAVATION REQUIRED FOR THE SUBSTRUCTURE AND RIPRAP ARE NOT INCLUDED IN THIS SCHEDULE.
STRUCTURE EXCAVATION WILL BE PAID FOR SEPARATELY; HOWEVER, EXCAVATION FOR RIPRAP WILL NOT BE PAID FOR SEPARATELY, BUT SHOULD BE INCLUDED IN THE BID PRICE OF THE PAY ITEMS.

FURNISHED EXCAVATION	139 CU YDS
EARTH EXCAVATION =	13 CU YDS
CHANNEL EXCAVATION =	1407 CU YDS

QUANTITIES TO BE NOTED:
STRUCTURE EXCAVATION = 560 CY
ESTIMATED EARTH GENERATED FROM RIPRAP (THEORETICAL; FROM TOP LINE OF RIPRAP) = (27 SY X 12" X 1/36") + (1242 SY X 22" X 1/36") = 768 CY
TOTAL ESTIMATED WASTE (THEORETICAL) = 560 CY + 768 CY + 1407 CY = 2735 CY

SCHEDULE OF QUANTITIES

TEMPORARY EROSION CONTROL & SEEDING SCHEDULE

LOCATION				TEMPORARY EROSION CONTROL SEEDING	PERIMETER EROSION BARRIER	STONE RIPRAP, CLASS A3	EROSION CONTROL BLANKET	SEEDING, CLASS 2	NITROGEN FERTILIZER NUTRIENT	PHOSPHORUS FERTILIZER NUTRIENT	POTASSIUM FERTILIZER NUTRIENT	AGRICULTURAL GROUND LIMESTONE	MULCH, METHOD 2
LT/RT	STA	TO	STA	(POUND)	(FOOT)	(SQ YD)	(SQ YD)	(ACRE)	(POUND)	(POUND)	(POUND)	(ACRE)	(ACRE)
JACKSON COUNTY													
PRE- STAGE 1													
IL 3													
RT	102+55.00		103+41.00	10.0									
RT	103+63.00		104+46.00	10.0									
LT	103+76.00		104+81.00	10.0									
LT	105+22.00		105+98.00	10.0									
SUB-TOTAL =				40.0									
STAGE 1													
IL 3													
RT	101+00.00		103+08.00	10.0	85	10.2	0	0.04	3.8	3.8	3.8	0.1	0.04
RT	104+55.00		107+00.00	10.0	140	14.4	0	0.03	2.5	2.5	2.5	0.1	0.03
WORTHEN BAYOU													
	8+60.00		10+50.00	10.0	0		337	0.06	5.3	5.3	5.3	0.1	0
SUB-TOTAL =				30.0	225	24.6	337	0.13	11.65	11.65	11.65	0.26	0.07
STAGE 2													
IL 3													
LT	101+00.00		103+95.00	10.0	150	17.9	0	0.05	4.1	4.1	4.1	0.1	0.05
LT	104+86.00		107+00.00	10.0	100	11.0	0	0.02	1.5	1.5	1.5	0.0	0.02
WORTHEN BAYOU													
	9+50.00		11+50.00	10.0	0		473	0.10	9.0	9.0	9.0	0.2	0
SUB-TOTAL =				30.0	250	28.9	473	0.16	14.6	14.6	14.6	0.3	0.06
TOTAL =				100	475	53	810	0.3	26	26	26	1	0.1

SCHEDULE OF QUANTITIES

PAVING SCHEDULE

LOCATION				LENGTH	PAVEMENT/ SHOULDER WIDTH (AVERAGE)	AREA	COMMENTS	PAVED SHOULDER REMOVAL	PAVEMENT REMOVAL	HMA SHLDS, 6"	HMA SHLDS, 10"	SUBBASE GRANULAR MATERIAL, TYPE B 6"	PAVT CONN (PCC) FOR BRIDGE APPR SLAB	WELDED WIRE REIN	PROTECT. COAT	HMA SURF REM, 1.5"	TEMP RAMP	POLY BIT MATLS (TACK COAT)	LONG. JOINT SEALANT	HOT-MIX ASPHALT SURFACE COURSE, IL-9.5, MIX "C", N70	HOT-MIX ASPHALT SHLDS
LT/RT	STATION	TO	STATION	(FOOT)	(FOOT)	(SQ FT)		(SQ YD)	(SQ YD)	(SQ YD)	(SQ YD)	(SQ YD)	(SQ YD)	(SQ YD)	(SQ YD)	(SQ YD)	(SQ YD)	(POUND)	(FOOT)	(TON)	(TON)
JACKSON COUNTY																					
IL 3																					
PRE-STAGE 1																					
LT	101+43.25		103+54.00	210.75	4.0	843.0	REM & REPL HMA SHLD, 4' WIDE NEXT TO EOP FOR S-1 TRAFFIC	93.7			93.7										
LT	104+96.00		106+55.85	159.85	4.0	639.4	REM & REPL HMA SHLD, 4' WIDE NEXT TO EOP FOR S-1 TRAFFIC	71.0			71.0										
STAGE 1																					
RT	102+73.58		103+41.00	59.34	16.75	994.0	REMOVAL FROM 1.25' RT TO RT OUTSIDE EOP		110.4												
RT	104+82.00		105+50.42	76.50	16.75	1281.3	REMOVAL FROM 1.25' RT TO RT OUTSIDE EOP		142.4												
RT	102+73.58		103+03.90	20.78	17.25	358.4	CONSTRUCTION FROM 2.75' RT TO RT OUTSIDE EOP					42.3	39.8	39.8	39.8						
RT	105+20.10		105+50.42	39.86	17.25	687.6	CONSTRUCTION FROM 2.75' RT TO RT OUTSIDE EOP					84.0	76.4	76.4	76.4						
RT	101+12.25		102+73.58	161.33	8.00	1290.6	REM & REPL HMA SHLD, 8' WIDE NEXT TO EOP FOR S-2 TRAFFIC	143.4			143.4										
RT	105+50.42		106+89.75	139.33	8.00	1114.6	REM & REPL HMA SHLD, 8' WIDE NEXT TO EOP FOR S-2 TRAFFIC	123.8			123.8										
RT	101+85.00		102+88.58	103.58	3.00	310.7	NEW HMA SHLD UNDER GUARDRAIL; 20.0' TO 23.0' RT			34.5											
RT	105+01.86		105+85.00	83.14	3.00	249.4	NEW HMA SHLD UNDER GUARDRAIL; 20.0' TO 23.0' RT			27.7											
STAGE 2																					
LT	102+73.58		103+41.00	74.45	19.25	1433.1	REMOVAL FROM 1.25' RT TO LTOUTSIDE EOP		159.2												
LT	104+82.00		105+50.42	61.39	19.25	1181.8	REMOVAL FROM 1.25' RT TO LTOUTSIDE EOP		131.3												
LT	102+73.58		103+03.90	37.56	22.75	854.4	CONSTRUCTION FROM 2.75' RT TO LT OUTSIDE EOP					102.6	94.9	94.9	94.9						
LT	105+20.10		105+50.42	23.08	22.75	525.2	CONSTRUCTION FROM 2.75' RT TO LT OUTSIDE EOP					60.9	58.4	58.4	58.4						
LT	102+40.00		103+22.14	82.14	3.00	246.4	NEW HMA SHLD UNDER GUARDRAIL; 20.0' TO 23.0' RT			27.4											
LT	105+35.42		106+40.00	104.58	3.00	313.7	NEW HMA SHLD UNDER GUARDRAIL; 20.0' TO 23.0' RT			34.9											
STAGE 3																					
LT/RT	101+92.00		102+73.58	81.58	12.0/8.0		PAVEMENT & SHOULDER MILLING & RESURFACING									362.6	26.7	261.1	81.6	18.3	12.2
LT/RT	105+50.42		106+32.00	81.58	12.0/8.0		PAVEMENT & SHOULDER MILLING & RESURFACING									362.6	26.7	261.1	81.6	18.3	12.2
GRAND TOTAL =								432	543	124	432	290	270	270	270	725	53	522	163	37	24

MODEL: Schedule Sheet 4
FILE NAME: pw://bfwms-pw.bentley.com:bfwms-pw-01/Documents/BFW/PROJECTS/2023 PROJECTS/23152 - IDOT D9 PTB199-038 WO#20 IL 3 Bridge Replacement/23152IDOTCAD_Sheets/D978967-sht-Schedule.dgn

BFW ENGINEERING & CONSULTING

USER NAME = ShelbySkinner	DESIGNED -	REVISED -	
	DRAWN -	REVISED -	
PLOT SCALE = $SCALE$	CHECKED -	REVISED -	
PLOT DATE = 11/24/2025	DATE -	REVISED -	

STATE OF ILLINOIS
DEPARTMENT OF TRANSPORTATION

SCHEDULE OF QUANTITIES
IL 3

SCALE: N.T.S. | SHEET 4 OF 7 SHEETS | STA. TO STA.

F.A.P. RTE.	SECTION	COUNTY	TOTAL SHEETS	SHEET NO.
312	130B-1	JACKSON	83	15

CONTRACT NO. 78967

ILLINOIS | FED. AID PROJECT

SCHEDULE OF QUANTITIES

GUARDRAIL SCHEDULE

LOCATION				GUARDRAIL REMOVAL	TRAFFIC BARRIER TERMINAL, TYPE 6	STEEL PLATE BEAM GUARDRAIL, TYPE A, 6' POSTS	TRAFFIC BARRIER TERMINAL TYPE 1 SPECIAL (TANGENT)	TERMINAL MARKER - DIRECT APPLIED	GUARDRAIL REFLECTOR TYPE A	BARRIER WALL REFLECTORS, TYPE B
LT/RT	STATION	TO	STATION	(FOOT)	(EACH)	(FOOT)	(EACH)	(EACH)	(EACH)	(EACH)
JACKSON COUNTY										
IL 3										
RT	101+91.62		102+41.62				1	1		
RT	102+41.62		102+66.62	134.0		25.0			1	
RT	102+66.62		103+06.02		1					
LT	102+47.26		102+97.26				1	1		
LT	102+97.26		102+97.26	133.0		0.0			1	
LT	102+97.26		103+36.66		1					
RT	103+06.02		104+87.34							6
LT	103+36.66		105+17.98							6
RT	104+87.34		105+26.74		1					
RT	105+26.74		105+26.74	133.0		0.0			1	
RT	105+26.74		105+76.74				1	1		
LT	105+17.98		105+57.38		1					
LT	105+57.38		105+82.38	132.0		25.0			1	
LT	105+82.38		106+32.38				1	1		
TOTAL =				532	4	50	4	4	4	12

MODEL: Schedule Sheet 5
FILE NAME: pw://bfwms-pw.bentley.com:bfwms-pw-01/Documents/BFW/PROJECTS/2025 PROJECTS/25152 - IDOT D9 PTB199-038 WO#20 IL 3 Bridge Replacement/25152/IDOT/CAD_Sheets/D978967-sht-Schedule.dgn

BFW ENGINEERING & CONSULTING

USER NAME = ShelbySkinner	DESIGNED -	REVISED -	
	DRAWN -	REVISED -	
PLOT SCALE = $SCALE$	CHECKED -	REVISED -	
PLOT DATE = 11/24/2025	DATE -	REVISED -	

STATE OF ILLINOIS
DEPARTMENT OF TRANSPORTATION

SCHEDULE OF QUANTITIES
IL 3

SCALE: N.T.S. | SHEET 5 OF 7 SHEETS | STA. | TO STA.

F.A.P. RTE.	SECTION	COUNTY	TOTAL SHEETS	SHEET NO.
312	130B-1	JACKSON	83	16

CONTRACT NO. 78967

ILLINOIS | FED. AID PROJECT

SCHEDULE OF QUANTITIES

TEMPORARY TRAFFIC CONTROL SCHEDULE

LOCATION				LENGTH	TEMPORARY BRIDGE TRAFFIC SIGNALS	TEMPORARY RUMBLE STRIPS	PAVEMENT MARKING REMOVAL - GRINDING	RAISED REFL PVT MK REMOVAL	TEMPORARY CONCRETE BARRIER	RELOCATE TEMPORARY CONCRETE BARRIER	PINNING TEMPORARY CONCRETE BARRIER	IMPACT ATTENUATORS, TEMPORARY (NON-REDIRECTIVE, NARROW), TEST LEVEL 3	IMPACT ATTENUATORS, RELOCATE (NON-REDIRECTIVE, NARROW), TEST LEVEL 3
LT/RT	STATION	TO	STATION	(FOOT)	(EACH)	(EACH)	(SQ FT)	(EACH)	(FOOT)	(FOOT)	(EACH)	(EACH)	(EACH)
JACKSON COUNTY													
IL 3					1	6							
STAGE 1													
	99+12.00		108+27.00	915.00			425.3	11					
	101+43.20		101+68.20									1	
	101+68.20		106+30.80	462.60					462.5		42		
	106+30.80		106+55.80									1	
STAGE 2													
	99+12.00		108+27.00	915.00			0	0					
	100+93.70		101+18.70										1
	101+18.70		106+80.30	561.60					100.0	462.5	24		
	106+80.30		107+05.30										1
STAGE 3													
	99+12.00		108+27.00	915.00			0						
TOTAL =					1	6	425	11	563	463	66	2	2

MODEL: Schedule Sheet 6
FILE NAME: pw://bfwms-pw-01\Documents\BFW\PROJECTS\2025 PROJECTS\25152 - IDOT D9 PTB199-038 WO#20 IL 3 Bridge Replacement\25152\IDOT\CAD_Sheets\D978967-sht-Schedule.dgn

BFW ENGINEERING & CONSULTING

USER NAME = ShelbySkinner	DESIGNED -	REVISED -	
	DRAWN -	REVISED -	
PLOT SCALE = $SCALE$	CHECKED -	REVISED -	
PLOT DATE = 11/24/2025	DATE -	REVISED -	

STATE OF ILLINOIS
DEPARTMENT OF TRANSPORTATION

SCHEDULE OF QUANTITIES
IL 3

SCALE: N.T.S | SHEET 6 OF 7 SHEETS | STA. | TO STA.

F.A.P. RTE.	SECTION	COUNTY	TOTAL SHEETS	SHEET NO.
312	130B-1	JACKSON	83	17

CONTRACT NO. 78967

ILLINOIS | FED. AID PROJECT

SCHEDULE OF QUANTITIES

FINAL PAVEMENT MARKING SCHEDULE									
LOCATION				LENGTH	SHORT TERM PAVEMENT MARKING	SHORT TERM PAVEMENT MARKING REMOVAL	PAINT PAVEMENT MARKING - LINE 4" (SKIP DASH, YELLOW)	PAINT PAVEMENT MARKING - LINE 4" (SOLID, WHITE)	PAINT PAVEMENT MARKING - LINE 4" (SOLID, YELLOW)
LT/RT	STATION	TO	STATION	(FOOT)	(FOOT)	(SQ FT)	(FOOT)	(FOOT)	(FOOT)
JACKSON COUNTY									
IL 3									
AFTER STAGE 2									
	99+12.00		108+27.00	915.00	146.8				
STAGE 3									
	99+12.00		108+27.00	915.00	22.8	46.5	228.8	1830.0	70.0
TOTAL =					170	47	230	1830	70
								2130	

MODEL: Schedule Sheet 7
FILE NAME: pw://bfwms-pw.bentley.com:bfwms-pw-01/Documents/BFW/PROJECTS/2025 PROJECTS/25152 - IDOT D9 PTB199-038 WO#20 IL 3 Bridge Replacement/25152/IDOT/CAD_Sheets/D978967-sht-Schedule.dgn

BFW ENGINEERING & CONSULTING

USER NAME = ShelbySkinner	DESIGNED -	REVISED -	
	DRAWN -	REVISED -	
PLOT SCALE = $SCALE$	CHECKED -	REVISED -	
PLOT DATE = 11/24/2025	DATE -	REVISED -	

STATE OF ILLINOIS
DEPARTMENT OF TRANSPORTATION

SCHEDULE OF QUANTITIES
IL 3

SCALE: N.T.S. | SHEET 7 OF 7 SHEETS | STA. | TO STA.

F.A.P. RTE.	SECTION	COUNTY	TOTAL SHEETS	SHEET NO.
312	130B-1	JACKSON	83	18

CONTRACT NO. 78967

ILLINOIS | FED. AID PROJECT

CENTERLINE POINTS

LOCATION:	NORTHING	EASTING	STATION	DESCRIPTION
IL 3	2499963.099	397316.874	45+23.72	POT STA. IL 3 EXCL
	2499946.935	394530.943	73+09.70	PI STA. IL 3 EXCL
	2499905.041	385690.880	161+49.86	POT STA. IL 3 EXCL

LIST OF BENCHMARKS

BENCHMARK #	COMMENTS/DESCRIPTIONS	NAVD 88 DATUM
BM039	EL 365.720	N 391486.778' E 2499948.058'

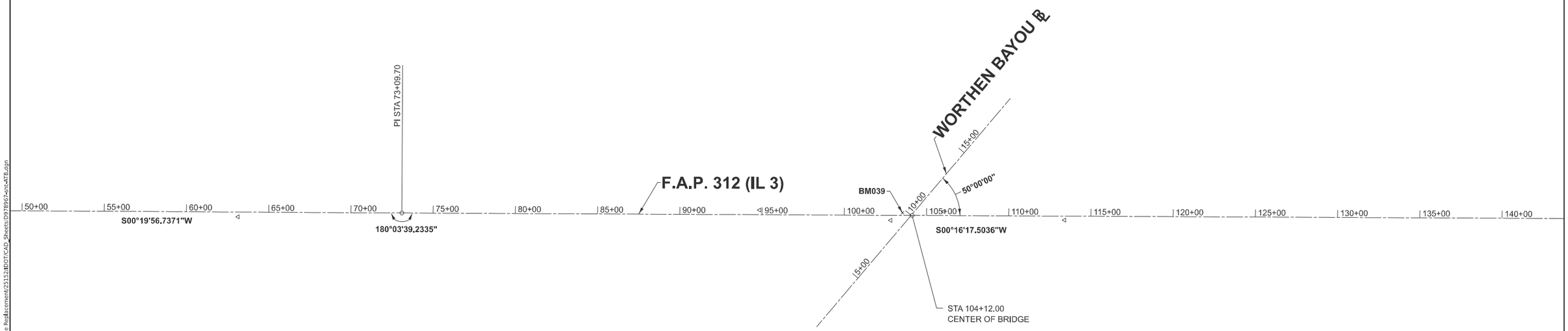

0 300 600 900
SCALE IN FEET

COORDINATE SYSTEM : NAD83 / 2011 ADJUSTMENT WITH GEOID 18, NAVD 88 DATUM VERTICAL. ILLINOIS STATE PLANE, EAST ZONE GRID COORDINATES

MODEL: Sheet 1
FILE NAME: pw://bfwms-pw.bentley.com:bfwms-pw-01/Documents/BFW/PROJECTS/2023 PROJECTS/23152 - IDOT D9 PTB 199-038 WO#20 IL 3 Bridge Replacement/23152/IDOT/CAD_Sheets/D978967-sht-ATB.dgn

BFW ENGINEERING & CONSULTING

USER NAME = ShelbySkinner	DESIGNED -	REVISED -	
	DRAWN -	REVISED -	
PLOT SCALE = $SCALE$	CHECKED -	REVISED -	
PLOT DATE = 11/26/2025	DATE -	REVISED -	

STATE OF ILLINOIS
DEPARTMENT OF TRANSPORTATION

ALIGNMENT, TIES & BENCHMARKS
IL 3

SCALE: 1" = 300' | SHEET 1 OF 1 SHEETS | STA. 50+00.00 TO STA. 140+00.00

F.A.P. RTE.	SECTION	COUNTY	TOTAL SHEETS	SHEET NO.
312	130B-1	JACKSON	83	19
		CONTRACT NO. 78967		
		ILLINOIS	FED. AID PROJECT	

EX ROW

PR HMA SURF REM, 1.5";
PR HMA SURF CSE., 1.5"
(S-3)

LIMITS OF CONSTRUCTION

STA 104+12.00 (40° SKEW - LT FWD)
PROPOSED TWO SPAN SUPPORTED ON INTEGRAL
ABUTMENTS AND PILE SUPPORTED PIER
153'-2" BK TO BK OF ABUT ℄ STA. 104+12.00
EXISITNG STRUCTURE TO BE REMOVED
(EX SN 039-0026)

PR PAVED SHLD REMOVAL;
PRHMA SHLDS, 10"(4.0' WIDE)
LT STA 101+43.25 TO LT STA 103+54.00

PR TBT TYPE 1 SPL. (TAN.);
AND TBT TYPE 6
EX SPRGR TO BE REMOVED

PR HMA SHLDS, 6"
(3.0' WIDE)
LT STA 102+40 TO
LT STA 103+22.14

PR PAVED SHLD REMOVAL;
PR HMA SHLDS, 10" (4.0' WIDE)
LT STA 101+43.25 TO LT STA
102+73.58

BM 039

PR PCC
PAVT. CONN.

PR BR
APPR. PAVT.

WORTHEN BAYOU

PR STONE RIPRAP,
CLASS A3

PR PAVED SHLD REMOVAL;
PRHMA SHLDS, 10"(4.0' WIDE)
LT STA 104+96.00 TO LT STA 106+55.75

PR HMA SURF REM, 1.5";
PR HMA SURF CSE., 1.5" (S-3)

PR TBT TYPE 1 SPL. (TAN.);
SPBGR, TYPE A, 6FT POSTS;
AND TBT TYPE 6
EX SPRGR TO BE REMOVED

PR HMA SHLDS, 6" (3.0' WIDE)
LT STA 105+35.42 TO LT STA 106+40

PR PAVED SHLD REMOVAL;
PR HMA SHLDS, 10" (4.0' WIDE)
LT STA 105+50.42 TO LT STA
106+55.75

BEGIN PROJECT
STA. 101+92.00

END PROJECT
STA. 106+32.00

℄ IL 3

101 102 103 104 105+00 106

50°00'00"

2'-9"

15.0'

+73.58 +47.26 +91.62 +32.38 +76.74 +50.42

110' 8'-6" 12" 12" 9'-0" 8'-0" 12" 12" 8'-0"

PR PAVED SHLD REMOVAL;
PR HMA SHLDS, 10" (8.0' WIDE)
RT STA 101+12.25 TO RT STA 102+73.58

PR TBT TYPE 1 SPL. (TAN.);
SPBGR, TYPE A, 6FT POSTS;
AND TBT TYPE 6
EX SPRGR TO BE REMOVED

PR HMA SHLDS, 6" (3.0' WIDE)
RT STA 101+85 TO RT STA 102+88.58

PR HMA SURF REM, V.D.;
PR HMA SHLDS, 1.5"
(8.0' WIDE)

PR STONE RIPRAP,
CLASS A3

STAGE CONTRUCTION LINE

STA 104+06.25 (IL 3)
STA 10+00.00 (WORTHEN BAYOU)

WORTHEN BAYOU 9+00

℄ WORTHEN BAYOU

PR PAVED SHLD REMOVAL;
PR HMA SHLDS, 10" (8.0' WIDE)
RT STA 105+50.42 TO RT STA 106+89.75

PR HMA SURF REM, V.D.;
PR HMA SHLDS, 1.5" (8.0' WIDE)

LIMITS OF CONSTRUCTION

PR HMA SHLDS, 6" (3.0' WIDE)
RT STA 105+01.86 TO RT STA 105+85

PR TBT TYPE 1 SPL. (TAN.); AND TBT TYPE 6
EX SPRGR TO BE REMOVED

PR TREE REMOVAL

0 20 40 60
SCALE IN FEET

NOTE: SEE GUARDRAIL SCHEDULES
FOR STATION LOCATIONS

EX ROW

375 370 365 360 355 350 345 340

EX PROFILE GRADE

VPI STA 101+92.00
ELEV. 365.04

PR PROFILE GRADE

+0.12%

VPI STA 102+73.58
ELEV. 365.14

+0.00%

PR PROFILE GRADE

+0.00%

VPI STA 106+32.00
ELEV. 365.14

EX PROFILE GRADE

364.93 | 365.04 365.07 365.05 | 365.05 365.11 | 365.18 365.14 | 361.65 365.14 | 345.19 365.14 | 352.16 365.14 | 365.28 365.14 | 365.33 365.14 | 365.18 365.14 | 365.14 | 365.12 | 365.21

101+50 102+00 102+50 103+00 103+50 104+00 104+50 105+00 105+50 106+00 106+50 107+00

MODEL: ExCL-4 • Plan 2-1
FILE NAME: pw://bfwm-pw.bentley.com:bfwmegw-01/Documents/BFW/PROJECTS/2025 PROJECTS/25152 - IDOT D9 PTB199-038 WO#20 IL 3 Bridge Replacement/25152/IDOT/CAD_Sheets/D978967-sht-Plan&Profile.dgn

BFW ENGINEERING & CONSULTING

USER NAME = ShelbySkinner	DESIGNED -	REVISED -
	DRAWN -	REVISED -
PLOT SCALE = $SCALE$	CHECKED -	REVISED -
PLOT DATE = 12/3/2025	DATE -	REVISED -

STATE OF ILLINOIS
DEPARTMENT OF TRANSPORTATION

PLAN & PROFILE
IL 3

SCALE: 1"=20' | SHEET 1 OF 1 SHEETS | STA. 101+00.00 TO STA. 107+00.00

F.A.P. RTE.	SECTION	COUNTY	TOTAL SHEETS	SHEET NO.
312	130B-1	JACKSON	83	20

CONTRACT NO. 78967

ILLINOIS | FED. AID PROJECT

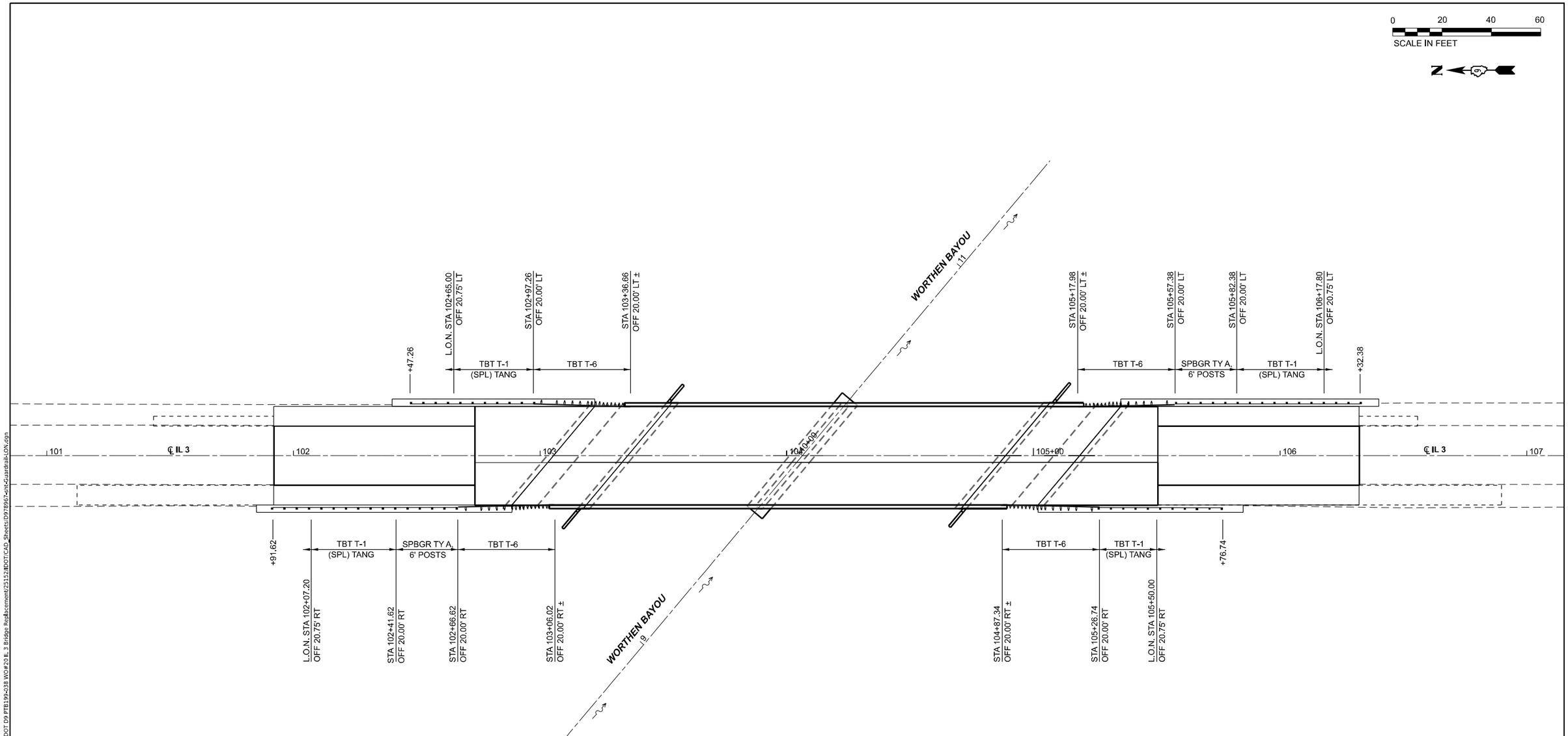

MODEL: ExCL - Plan 2
FILE NAME: pw://bfwms-pw.bentley.com:bfwms-pw-01/Documents/BFW/PROJECTS/2025 PROJECTS/25152 - IDOT D9 PTB199-038 WO#20 IL 3 Bridge Replacement/25152IDOTCAD_Sheets/D978967-sht-Guardrail-LON.dgn

BFW ENGINEERING & CONSULTING

USER NAME = sskinner	DESIGNED -	REVISED -
	DRAWN -	REVISED -
PLOT SCALE = 0.16666633 ' / in.	CHECKED -	REVISED -
PLOT DATE = 11/12/2025	DATE -	REVISED -

STATE OF ILLINOIS
DEPARTMENT OF TRANSPORTATION

GUARDRAIL LAYOUT PLAN
IL 3

SCALE: 1"=20' | SHEET 1 OF 1 SHEETS | STA. 101+00.00 TO STA. 107+00.00

F.A.P. RTE.	SECTION	COUNTY	TOTAL SHEETS	SHEET NO.
312	130B-1	JACKSON	83	21

CONTRACT NO. 78967

ILLINOIS | FED. AID PROJECT

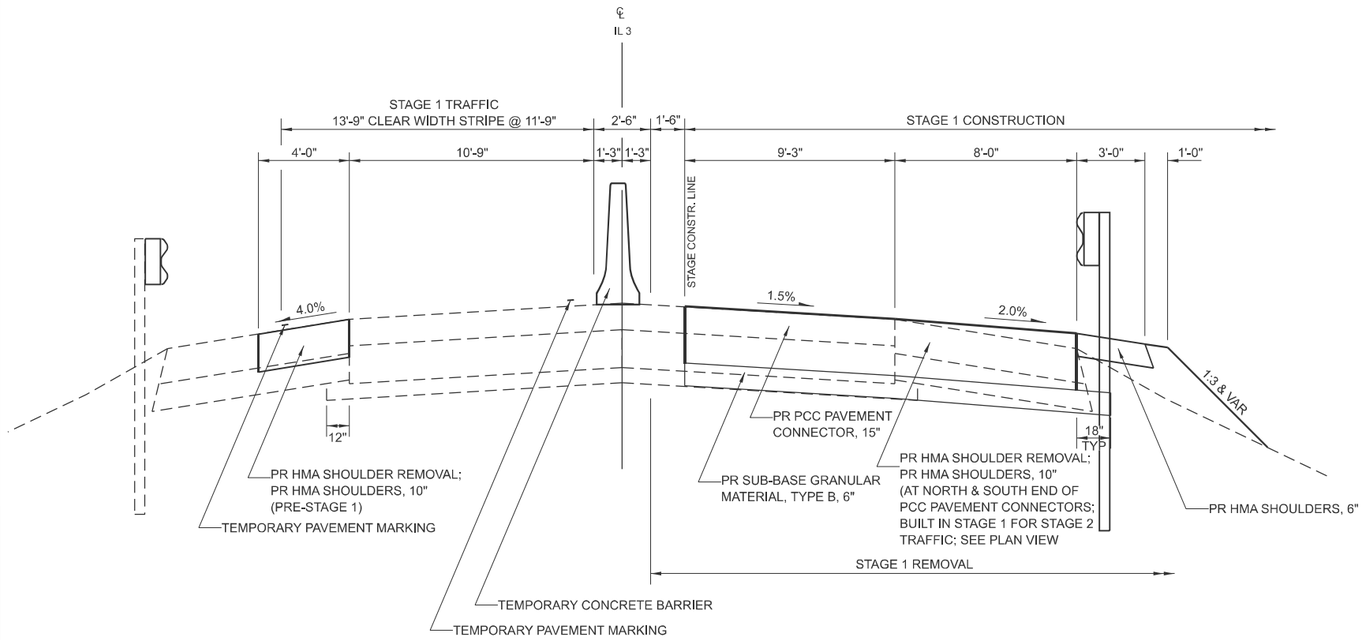

STAGE 1 CONSTRUCTION

(LOOKING SOUTH)

STAGE 1 CONSTRUCTION

1. UTILIZE TRAFFIC CONTROL AND PROTECTION, STANDARD 701201 AND 701321.
2. PLACE TEMPORARY TRAFFIC CONTROL AS SHOWN ON THE DETAILS.
3. INSTALL TEMPORARY TRAFFIC SIGNALS PRIOR TO CLOSING THE SOUTHBOUND LANE OF THE ROADWAY. SEE "TRAFFIC CONTROL NOTES" FOR MORE DETAILS.
4. UTILIZE TRAFFIC CONTROL AND PROTECTION, STANDARD 701321 TO DIRECT TRAFFIC TO THE NORTHBOUND / EAST SIDE OF IL 3. CONSTRUCT TEMPORARY SHEET PILING AT THE NORTH AND SOUTH SIDE OF THE EXISITING STRUCTURE. REMOVE THE SOUTHBOUND SIDE OF THE STRUCTURE.
5. CONSTRUCT THE SOUTHBOUND SIDE OF THE BRIDGE STRUCTURE, EMBANKMENT AT THE NORTH AND SOUTH SIDES OF THE PROPOSED STRUCTURE, APPROACH PAVEMENT, AND PCC PAVEMENT CONNECTORS.

TRAFFIC CONTROL NOTES

1. THE CONTRACTOR WILL HAVE THE OPTION TO USE MICROWAVE DETECTION FOR USE WITH THE TEMPORARY TRAFFIC SIGNALS IN ACCORDANCE WITH HIGHWAY STANDARD 701321.
2. ALL TEMPORARY PAVEMENT MARKINGS, DRUMS, ETC. SHALL BE PLACED PRIOR TO PLACING TEMPORARY CONCRETE BARRIERS.

WIDE LOAD SIGN

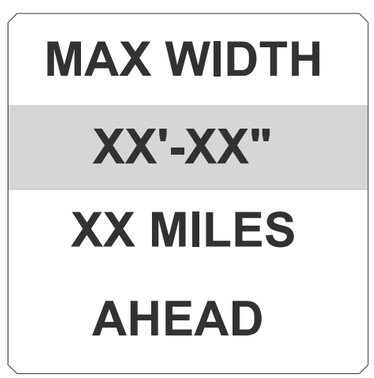

W12-I103 (48 X 48)

SERIES D ALPHABET, NO BORDER,
BLACK ON WHITE

NOTES FOR WIDE LOAD SIGN

THE CONTRACTOR SHALL FURNISH THE POST AND ERECT THE SIGN AT THE NECESSARY LOCATION AS DIRECTED BY THE ENGINEER. THE SIGN SHALL BE POST MOUNTED.

THE ABOVE NOTED WORK, INCLUDING SIGNS, POSTS, HARDWARE, AND LABOR SHALL BE INCLUDED IN THE CONTRACT UNIT PRICE, EACH, FOR TRAFFIC CONTROL AND PROTECTION, STANDARD 701321, AND NO OTHER COMPENSATION WILL BE ALLLOWED.

FOR WORK ON ALL STRUCTURES, THE WIDTH SHOWN ON THE W12-I103 SIGN SHALL BE 12'-3" (STAGE 1); 12'-9" (STAGE 2) OR DIRECTED BY THE ENGINEER. THE "X" MILES AHEAD WILL BE DETERMINED BY THE ENGINEER.

NOTES FOR TRAFFIC CONTROL & PROTECTION STANDARD 701321

ALL TC&P ITEMS SHOWN IN THE DETAILS SHALL BE INCLUDED IN THE CONTRACT UNIT PRICE, EACH FOR TRAFFIC CONTROL AND PROTECTION, STANDARD 701321, EXCEPT FOR SEPARATE PAY ITEMS INCLUDED IN THIS CONTRACT. NO OTHER COMPENSATION WILL BE ALLOWED.

1. ALL SIGNAGE AS SHOWN ON THE HIGHWAY STANDARD AND ADDITIONAL SIGNAGE SHOWN ON THE STAGE 1 DETAILS. THE NOTED WORK SHALL INCLUDE SIGNS, POSTS, HARDWARE AND LABOR. THE CONTRACTOR SHALL ERECT THE SIGNS AT THE LOCATIONS ON THE DETAIL AND AT LOCATIONS DIRECTED BY THE ENGINEER.
2. TEMPORARY PAVEMENT MARKING IS SHOWN ON THE STANDARD AND DETAILS. THE COST OF TEMPORARY PAVEMENT MARKING AND ITS REMOVAL WILL BE PAID FOR SEPARATELY AS INCLUDED IN THE CONTRACT PLANS.

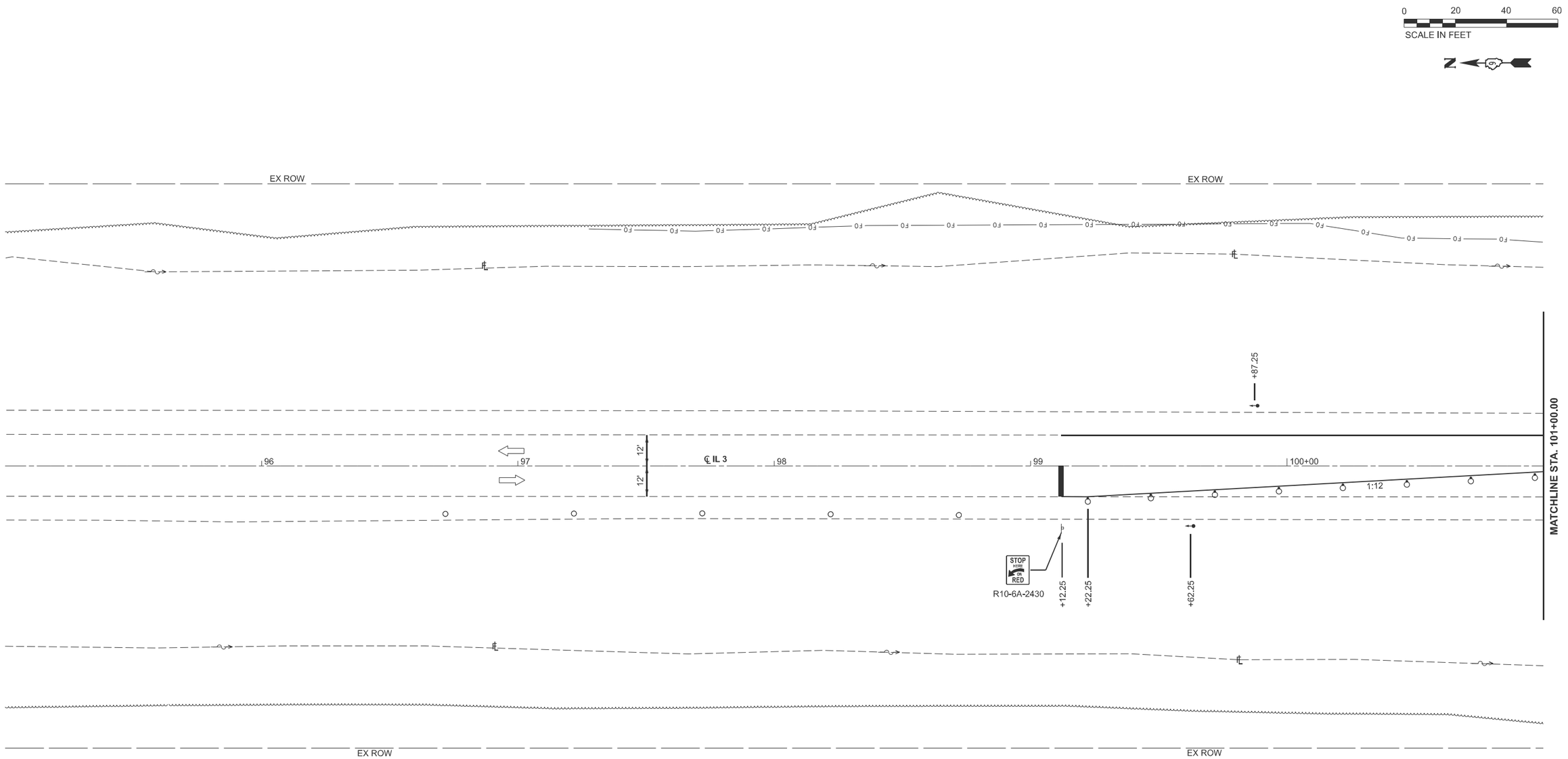

TRAFFIC CONTROL LEGEND

- SIGN
- TRAFFIC SIGNAL
- DRUM
- DRUM WITH STEADY BURNING BI-DIRECTIONAL LIGHT

NOTE:
SEE TC&P STANDARD 701321 FOR OTHER REQUIRED ADVANCE SIGNING AND TRAFFIC CONTROL ITEMS NOT SHOWN ON THIS DETAIL SHEET. THE INTENT OF THESE DETAILS IS JUST TO SHOW EXACT LOCATION OF ITEMS.

MODEL: ExCL - Plan 1
FILE NAME: pw://bfwms-pw.bentley.com:bfwms-pw-01/Documents/BFW/PROJECTS/2023 PROJECTS/23152 - IDOT D9 PTB199-038 WO#20 IL 3 Bridge Replacement/23152-IDOT/CAD_Sheets/D978967-sht-Stage 1 Traffic.dgn

BFW ENGINEERING & CONSULTING	USER NAME = ShelbySkinner	DESIGNED -	REVISED -	STATE OF ILLINOIS DEPARTMENT OF TRANSPORTATION	STAGE 1 TRAFFIC CONTROL PLANS IL 3	F.A.P. RTE.	SECTION	COUNTY	TOTAL SHEETS / SHEET NO.
		DRAWN -	REVISED -			312	130B-1	JACKSON	83 / 23
	PLOT SCALE = $SCALE$	CHECKED -	REVISED -					CONTRACT NO. 78967	
	PLOT DATE = 11/24/2025	DATE -	REVISED -		SCALE: 1"=20' / SHEET 2 OF 4 SHEETS / STA. 95+00.00 TO STA. 101+00.00		ILLINOIS	FED. AID PROJECT	

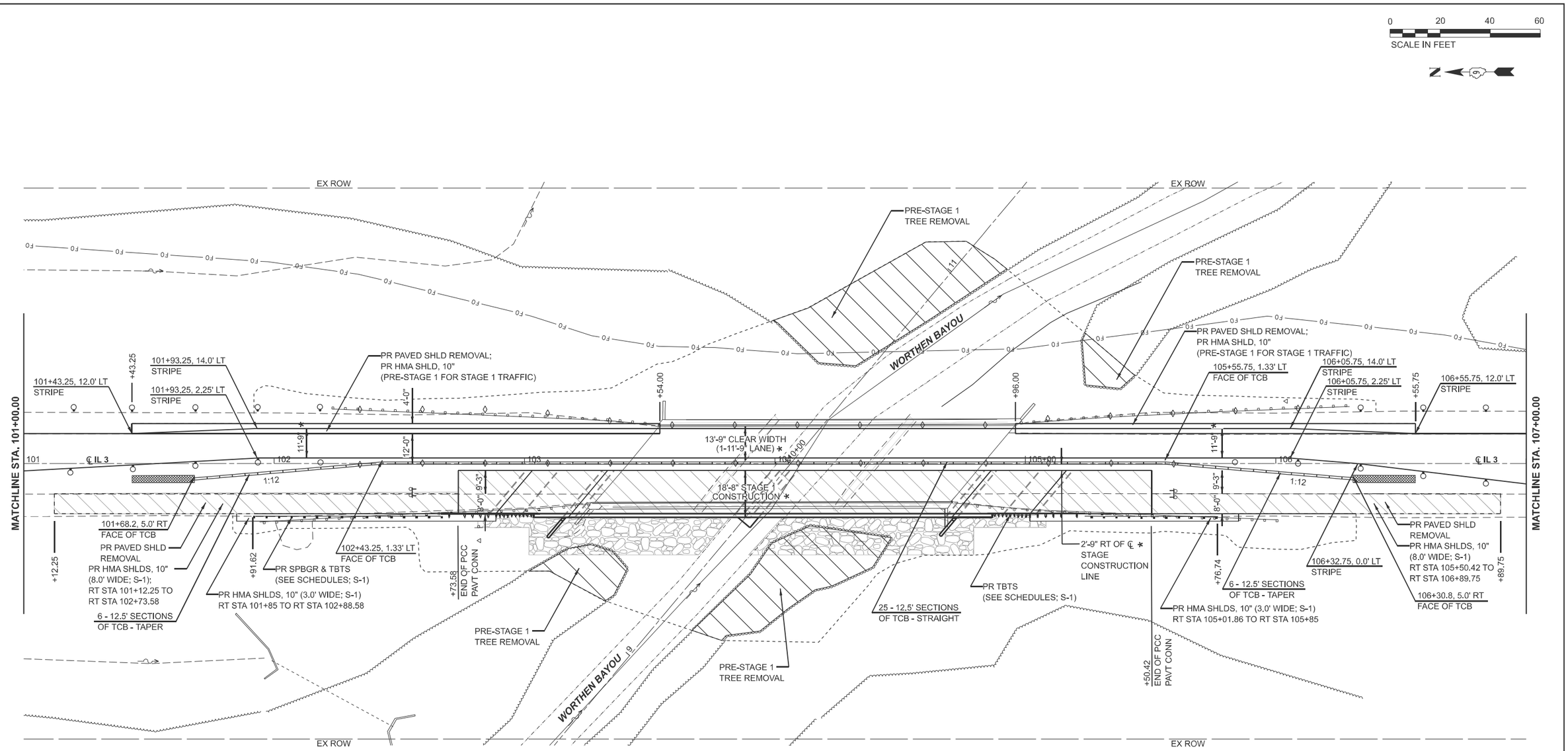

TRAFFIC CONTROL LEGEND

- DRUM
- DRUM WITH STEADY BURNING BI-DIRECTIONAL LIGHT
- TEMPORARY CONCRETE BARRIER
- CRYSTAL, BI-DIRECTIONAL BARRIER WALL REFLECTOR
- TEMPORARY IMPACT ATTENUATOR
- TYPE III BARRICADES WITH FLASHING LIGHTS
- WORK AREA

NOTE:
THE TEMPORARY CONCRETE BARRIER SHALL BE PINNED TO THE PAVEMENT WITH 3 ANCHOR PINS PER SECTION ON THE TRAFFIC SIDE OF THE BARRIER WALL AT THE FOLLOWING LOCATIONS:

STAGE I 102+68.25 TO 103+43.25
103+43.25 TO 104+80.75 (PINNING REQUIRED IN THE EXISTING BRIDGE DECK, BUT NOT PAID FOR SEPARATELY PER STRUCTURE DETAILS)
104+80.75 TO 105+55.75

THE 2 BARRIERS BEFORE & AFTER THE ABOVE LOCATIONS SHALL BE PINNED AS DESCRIBED IN ARTICLE 704.04 TO PROVIDE A TRANSITION FROM THE PINNED TO UNPINNED BARRIER.
THE BARRIER UNIT AT EACH END SHALL BE ANCHORED AS SPECIFIED IN ARTICLE 704.04. ALL ANCHORING AND PINNING HOLES SHALL BE CORE DRILLED.

NOTE:
SEE TC&P STANDARD 701321 FOR OTHER REQUIRED ADVANCE SIGNING AND TRAFFIC CONTROL ITEMS NOT SHOWN ON THIS DETAIL SHEET. THE INTENT OF THESE DETAILS IS JUST TO SHOW EXACT LOCATION OF ITEMS.

* SEE TYPICAL CROSS SECTIONS FOR STAGE CONSTRUCTION AND TEMP. TRAFFIC CONTROL IN STRUCTURE DETAILS.

MODEL: EXCL - Plan 2
FILE NAME: pw://bfwms-pw.bentley.com:bfwms-pw-01/Documents/BFW/PROJECTS/2025 PROJECTS/25152 - IDOT D9 PTB199-038 WO#2 IL 3 Bridge Replacement/25152/IDOT/CAD_Sheets/D978967-sht-Stage 1 Traffic.cign

BFW ENGINEERING & CONSULTING	USER NAME = ShelbySkinner	DESIGNED -	REVISED -
		DRAWN -	REVISED -
	PLOT SCALE = $SCALE$	CHECKED -	REVISED -
	PLOT DATE = 11/24/2025	DATE -	REVISED -

STATE OF ILLINOIS
DEPARTMENT OF TRANSPORTATION

STAGE 1 TRAFFIC CONTROL PLANS
IL 3

SCALE: 1"=20' | SHEET 3 OF 4 SHEETS | STA. 101+00.00 TO STA. 107+00.00

F.A.P. RTE.	SECTION	COUNTY	TOTAL SHEETS	SHEET NO.
312	130B-1	JACKSON	83	24
		CONTRACT NO. 78967		
		ILLINOIS	FED. AID PROJECT	

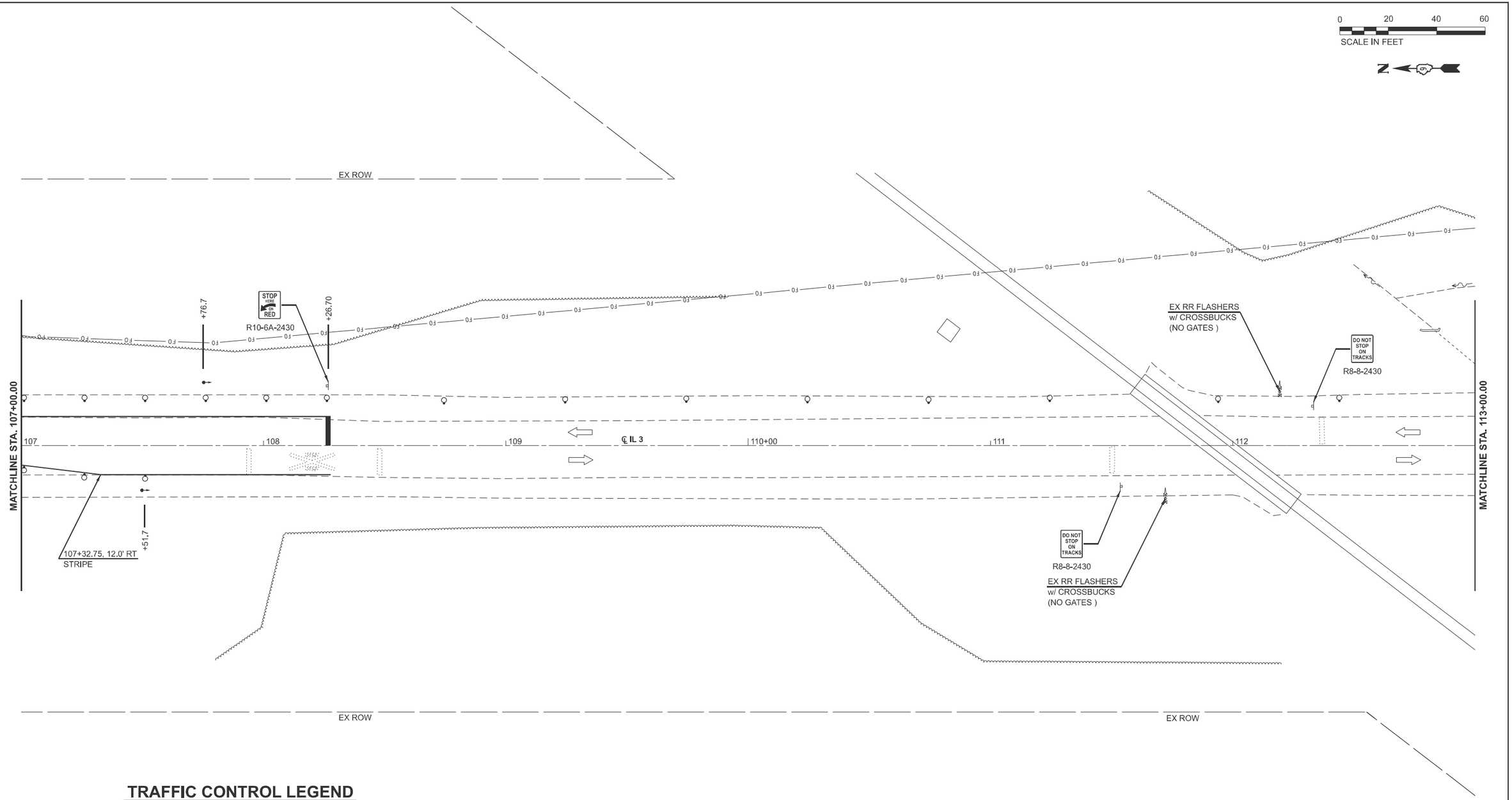

TRAFFIC CONTROL LEGEND

- SIGN
- TRAFFIC SIGNAL
- DRUM
- DRUM WITH STEADY BURNING BI-DIRECTIONAL LIGHT

NOTE:
SEE TC&P STANDARD 701321 FOR OTHER REQUIRED ADVANCE SIGNING AND TRAFFIC CONTROL ITEMS NOT SHOWN ON THIS DETAIL SHEET. THE INTENT OF THESE DETAILS IS JUST TO SHOW EXACT LOCATION OF ITEMS.

MODEL: EXCL - Plan 3
FILE NAME: pw://bfwmc-pw.bentley.com:bfwmc-pw-01/Documents/BFW/PROJECTS/2025 PROJECTS/25152 - IDOT D9 PTB199-038 WO#20 IL 3 Bridge Replacement/25152/IDOT/CAD_Sheets/D978967-sht-Stage 1 Traffic.dgn

BFW ENGINEERING & CONSULTING	USER NAME = ShelbySkinner	DESIGNED -	REVISED -	STATE OF ILLINOIS DEPARTMENT OF TRANSPORTATION	STAGE 1 TRAFFIC CONTROL PLANS IL 3			F.A.P. RTE.	SECTION	COUNTY	TOTAL SHEETS / SHEET NO.
		DRAWN -	REVISED -					312	130B-1	JACKSON	83 / 25
	PLOT SCALE = $SCALE$	CHECKED -	REVISED -							CONTRACT NO. 78967	
	PLOT DATE = 11/24/2025	DATE -	REVISED -		SCALE: 1"=20'	SHEET 4 OF 4 SHEETS	STA. 107+00.00 TO STA. 113+00.00		ILLINOIS	FED. AID PROJECT	

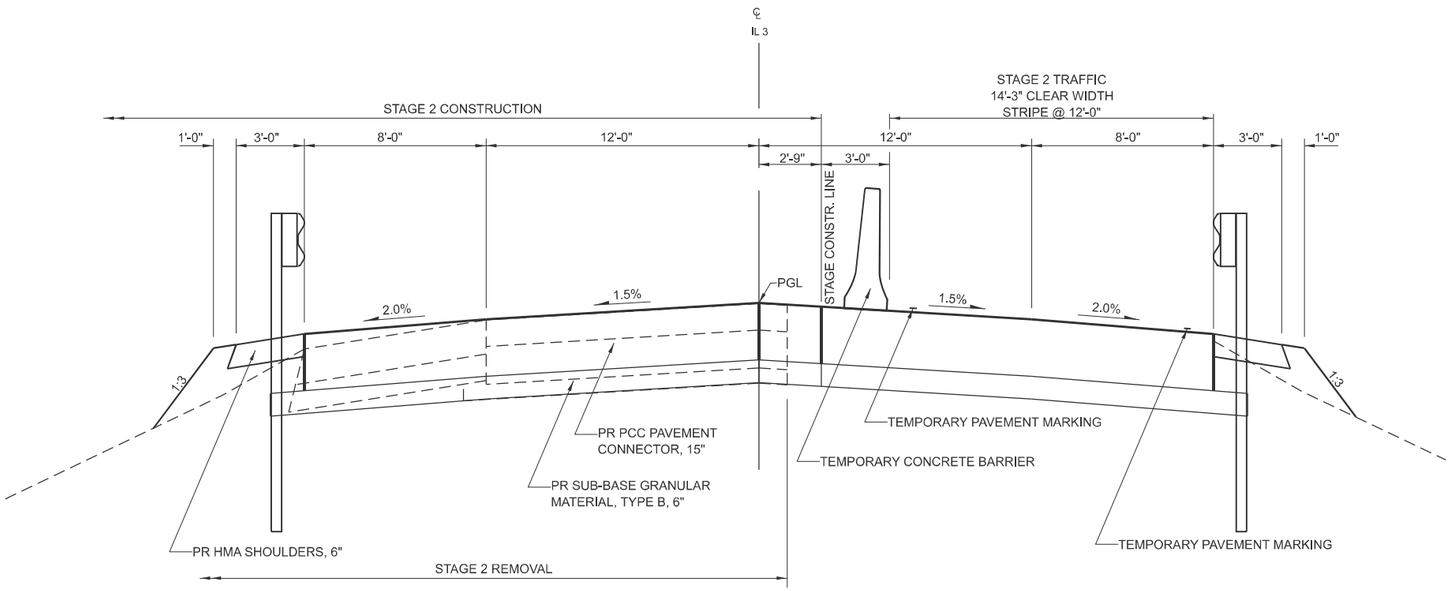

STAGE 2 CONSTRUCTION

(LOOKING SOUTH)

STAGE 2 CONSTRUCTION

1. UTILIZE TRAFFIC CONTROL AND PROTECTION, STANDARD 701201 AND 701321, TO REMOVE STAGE 1 TC&P AND SET UP STAGE 2 TC&P.
2. PLACE TEMPORARY TRAFFIC CONTROL AS SHOWN ON THE DETAILS.
3. INSTALL TEMPORARY TRAFFIC SIGNALS PRIOR TO CLOSING THE NORTHBOUND LANE OF THE ROADWAY (SAME LOCATION AS IN STAGE 1). SEE "TRAFFIC CONTROL NOTES" FOR MORE DETAILS.
4. UTILIZE TRAFFIC CONTROL AND PROTECTION, STANDARD 701321 TO DIRECT TRAFFIC TO THE SOUTHBOUND / WEST SIDE OF IL 3. REMOVE THE NORTHBOUND SIDE OF THE STRUCTURE.
5. CONSTRUCT THE NORTHBOUND SIDE OF THE BRIDGE STRUCTURE, EMBANKMENT AT THE NORTH AND SOUTH SIDES OF THE PROPOSED STRUCTURE, AND APPROACH PAVEMENT.

TRAFFIC CONTROL NOTES

1. THE CONTRACTOR WILL HAVE THE OPTION TO USE MICROWAVE DETECTION FOR USE WITH THE TEMPORARY TRAFFIC SIGNALS IN ACCORDANCE WITH HIGHWAY STANDARD 701321.
2. ALL TEMPORARY PAVEMENT MARKINGS, DRUMS, ETC. SHALL BE PLACED PRIOR TO PLACING TEMPORARY CONCRETE BARRIERS.

WIDE LOAD SIGN

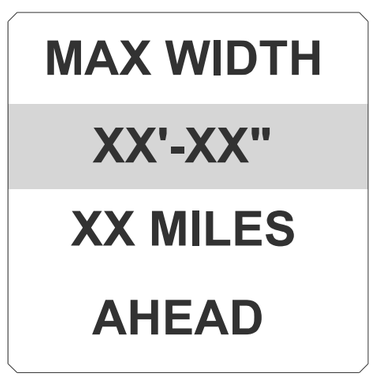

W12-I103 (48 X 48)

SERIES D ALPHABET, NO BORDER,
BLACK ON WHITE

NOTES FOR WIDE LOAD SIGN

THE CONTRACTOR SHALL FURNISH THE POST AND ERECT THE SIGN AT THE NECESSARY LOCATION AS DIRECTED BY THE ENGINEER. THE SIGN SHALL BE POST MOUNTED.

THE ABOVE NOTED WORK, INCLUDING SIGNS, POSTS, HARDWARE, AND LABOR SHALL BE INCLUDED IN THE CONTRACT UNIT PRICE, EACH, FOR TRAFFIC CONTROL AND PROTECTION, STANDARD 701321, AND NO OTHER COMPENSATION WILL BE ALLLOWED.

FOR WORK ON ALL STRUCTURES, THE WIDTH SHOWN ON THE W12-I103 SIGN SHALL BE 12'-3" (STAGE 1); 12'-9" (STAGE 2) OR DIRECTED BY THE ENGINEER. THE "X" MILES AHEAD WILL BE DETERMINED BY THE ENGINEER.

NOTES FOR TRAFFIC CONTROL & PROTECTION STANDARD 701321

ALL TC&P ITEMS SHOWN IN THE DETAILS SHALL BE INCLUDED IN THE CONTRACT UNIT PRICE, EACH FOR TRAFFIC CONTROL AND PROTECTION, STANDARD 701321, EXCEPT FOR SEPARATE PAY ITEMS INCLUDED IN THIS CONTRACT. NO OTHER COMPENSATION WILL BE ALLOWED.

1. ALL SIGNAGE AS SHOWN ON THE HIGHWAY STANDARD AND ADDITIONAL SIGNAGE SHOWN ON THE STAGE 2 DETAILS. THE NOTED WORK SHALL INCLUDE SIGNS, POSTS, HARDWARE AND LABOR. THE CONTRACTOR SHALL ERECT THE SIGNS AT THE LOCATIONS ON THE DETAIL AND AT LOCATIONS DIRECTED BY THE ENGINEER.
2. TEMPORARY PAVEMENT MARKING IS SHOWN ON THE STANDARD AND DETAILS. THE COST OF TEMPORARY PAVEMENT MARKING AND ITS REMOVAL WILL BE PAID FOR SEPARATELY AS INCLUDED IN THE CONTRACT PLANS.

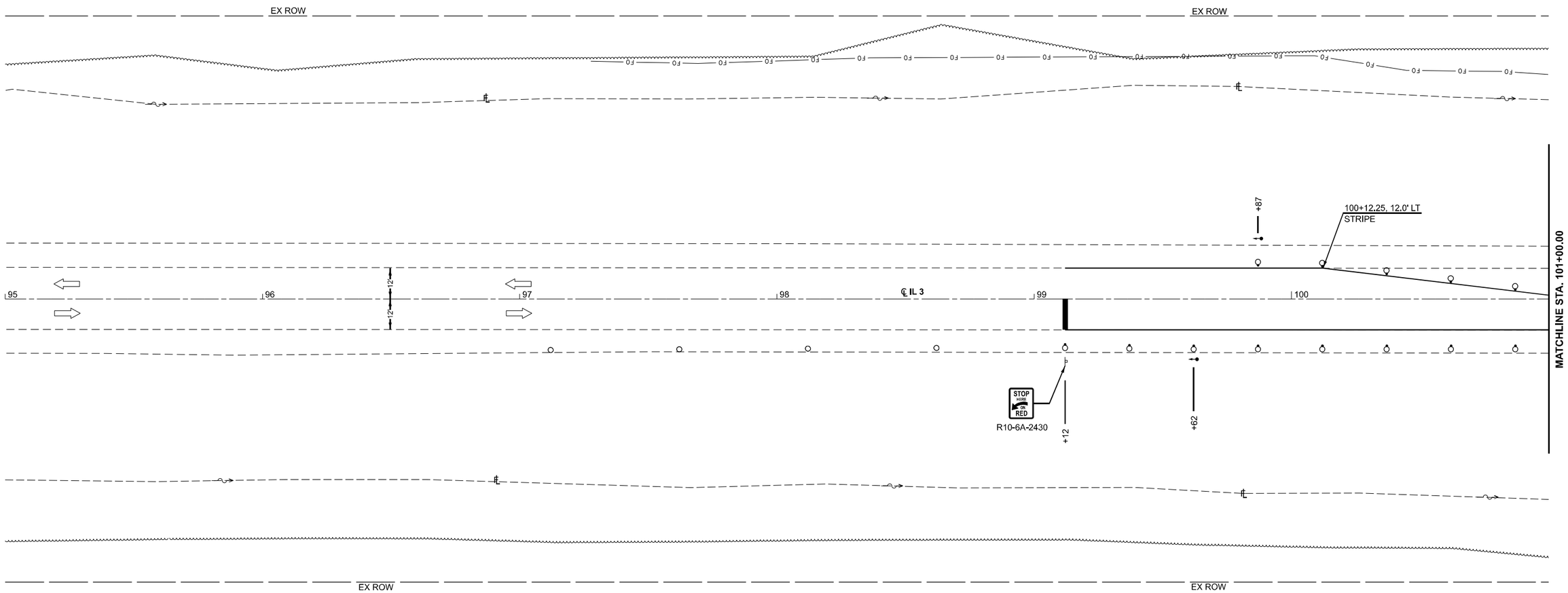

TRAFFIC CONTROL LEGEND

- SIGN
- TRAFFIC SIGNAL
- DRUM
- DRUM WITH STEADY BURNING BI-DIRECTIONAL LIGHT

NOTE:
SEE TC&P STANDARD 701321 FOR OTHER REQUIRED ADVANCE SIGNING AND TRAFFIC CONTROL ITEMS NOT SHOWN ON THIS DETAIL SHEET. THE INTENT OF THESE DETAILS IS JUST TO SHOW EXACT LOCATION OF ITEMS.

MODEL: ExCL - Plan 1
FILE NAME: pw://bfwms-pw.bentley.com:bfwms-pw-01/Documents/BFW/PROJECTS/2025 PROJECTS/25152 - IDOT D9 PTB199-038 WO#20 IL 3 Bridge Replacement/25152/IDOT/CAD_Sheets/0978967-sht-Stage 2 Traffic.cgn

BFW ENGINEERING & CONSULTING

USER NAME = sclyne	DESIGNED -	REVISED -	
	DRAWN -	REVISED -	
PLOT SCALE = $SCALE$	CHECKED -	REVISED -	
PLOT DATE = 11/7/2025	DATE -	REVISED -	

STATE OF ILLINOIS
DEPARTMENT OF TRANSPORTATION

STAGE 2 TRAFFIC CONTROL PLANS
IL 3

SCALE: 1"=20' | SHEET 2 OF 4 SHEETS | STA. 95+00.00 TO STA. 101+00.00

F.A.P. RTE.	SECTION	COUNTY	TOTAL SHEETS	SHEET NO.
312	130B-1	JACKSON	83	27
		CONTRACT NO. 78967		
		ILLINOIS	FED. AID PROJECT	

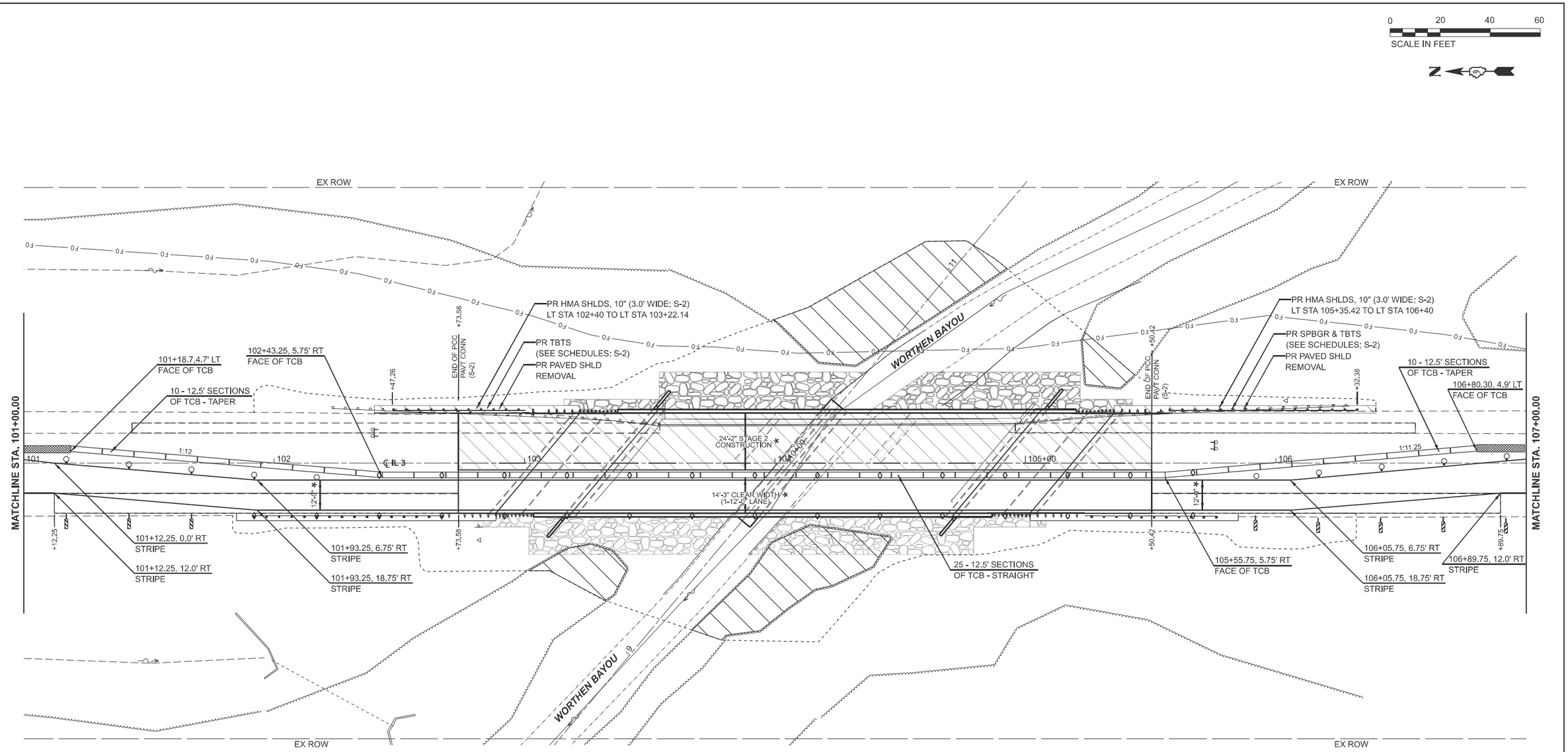

TRAFFIC CONTROL LEGEND

- DRUM WITH STEADY BURNING BI-DIRECTIONAL LIGHT
- TEMPORARY CONCRETE BARRIER
- CRYSTAL, BI-DIRECTIONAL BARRIER WALL REFLECTOR
- TEMPORARY IMPACT ATTENUATOR
- TYPE III BARRICADES WITH FLASHING LIGHTS
- DOUBLE VERTICAL PANEL
- WORK AREA

NOTE:
THE TEMPORARY CONCRETE BARRIER SHALL BE TEMPORARILY SECURED WITH A RETAINER ASSEMBLY AS DETAILED IN THE STRUCTURE PLANS ACROSS BRIDGE APPROACH SLABS, AND BRIDGE DECK AT THE FOLLOWING LOCATIONS:

STAGE II 103+00.00 TO 105+15.00

THE 2 BARRIERS BEFORE & AFTER THE ABOVE LOCATIONS SHALL BE PINNED AS DESCRIBED IN ARTICLE 704.04 TO PROVIDE A TRANSITION FROM THE PINNED TO UNPINNED BARRIER.
THE BARRIER UNIT AT EACH END SHALL BE ANCHORED AS SPECIFIED IN ARTICLE 704.04. ALL ANCHORING AND PINNING HOLES SHALL BE CORE DRILLED.

NOTE:
SEE GUARDRAIL SCHEDULES FOR STATION LOCATIONS.

NOTE:
SEE TC&P STANDARD 701321 FOR OTHER REQUIRED ADVANCE SIGNING AND TRAFFIC CONTROL ITEMS NOT SHOWN ON THIS DETAIL SHEET. THE INTENT OF THESE DETAILS IS JUST TO SHOW EXACT LOCATION OF ITEMS.

* SEE TYPICAL CROSS SECTIONS FOR STAGE CONSTRUCTION AND TEMP. TRAFFIC CONTROL IN STRUCTURE DETAILS.

MODEL: ExCL - Plan 2
FILE NAME: pw://bfwmc-pw.bentley.com:bfwmc-pw-01/Documents/BFW/PROJECTS/2025 PROJECTS/25152 - IDOT D9 PTB199-038 WO#20 IL 3 Bridge Replacement/25152IDOTCAD_Sheets/D978967-sht-Stage 2 Traffic.dgn

BFW ENGINEERING & CONSULTING

USER NAME = ShelbySkinner	DESIGNED -	REVISED -	
	DRAWN -	REVISED -	
PLOT SCALE = $SCALE$	CHECKED -	REVISED -	
PLOT DATE = 11/25/2025	DATE -	REVISED -	

STATE OF ILLINOIS
DEPARTMENT OF TRANSPORTATION

STAGE 2 TRAFFIC CONTROL PLANS
IL 3

SCALE: 1"=20' | SHEET 3 OF 4 SHEETS | STA. 101+00.00 TO STA. 107+00.00

F.A.P. RTE.	SECTION	COUNTY	TOTAL SHEETS	SHEET NO.
312	130B-1	JACKSON	83	28
		CONTRACT NO. 78967		
		ILLINOIS	FED. AID PROJECT	

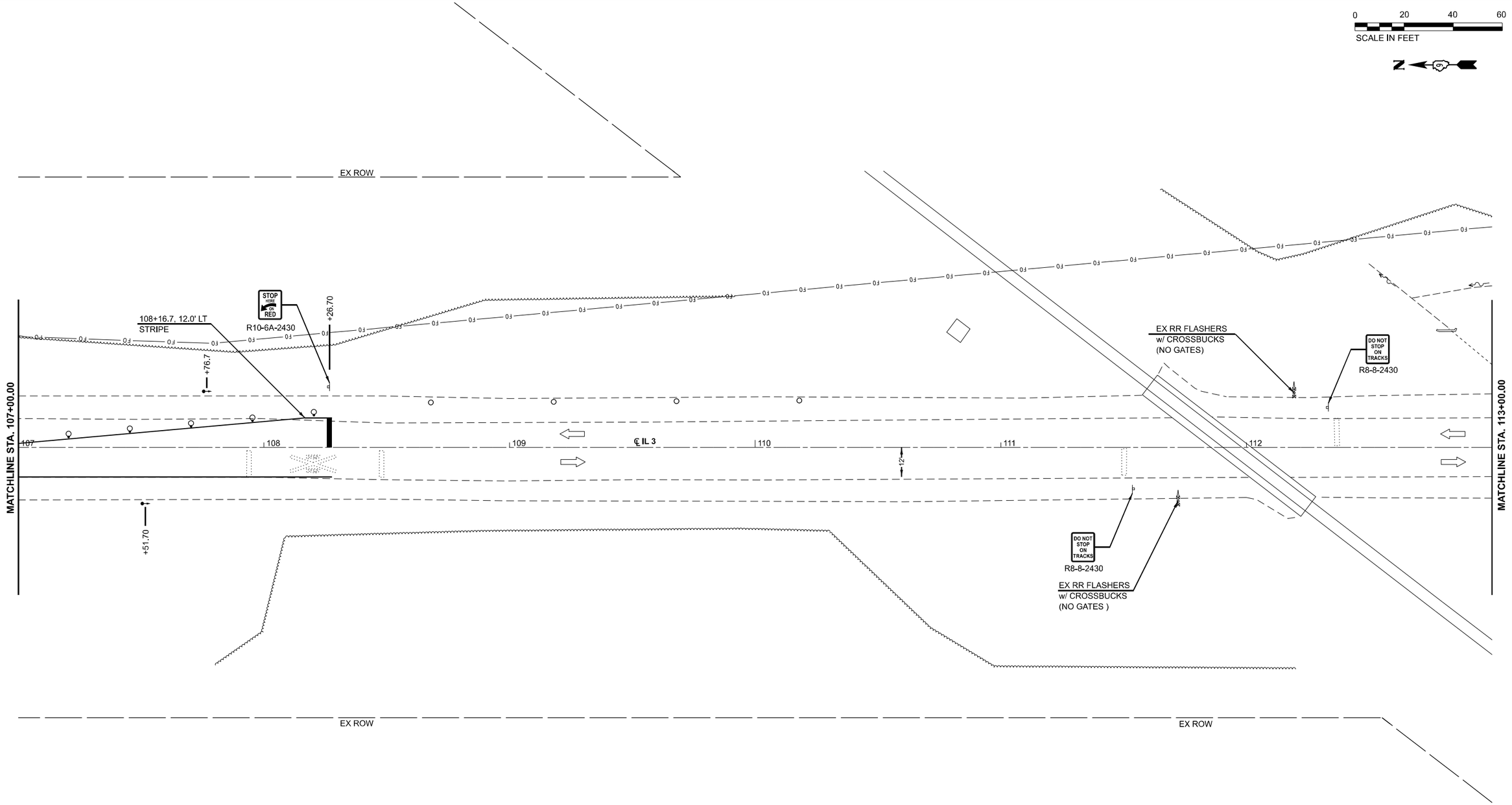

TRAFFIC CONTROL LEGEND

- SIGN
- TRAFFIC SIGNAL
- DRUM
- DRUM WITH STEADY BURNING BI-DIRECTIONAL LIGHT

NOTE:
SEE TC&P STANDARD 701321 FOR OTHER REQUIRED ADVANCE SIGNING AND TRAFFIC CONTROL ITEMS NOT SHOWN ON THIS DETAIL SHEET. THE INTENT OF THESE DETAILS IS JUST TO SHOW EXACT LOCATION OF ITEMS.

MODEL: ExCL - Plan 3
FILE NAME: pw://bfwms-pw.bentley.com:bfwms-pw-01/Documents/BFW/PROJECTS/2025 PROJECTS/25152 - IDOT D9 PTB199-038 WO#20 IL 3 Bridge Replacement/25152IDOTCAD_Sheets/D978967-sht-Stage 2 Traffic.cgn

BFW ENGINEERING & CONSULTING	USER NAME = sclyne	DESIGNED -	REVISED -	STATE OF ILLINOIS DEPARTMENT OF TRANSPORTATION	STAGE 2 TRAFFIC CONTROL PLANS IL 3			F.A.P. RTE.	SECTION	COUNTY	TOTAL SHEETS / SHEET NO.
		DRAWN -	REVISED -					312	130B-1	JACKSON	83 / 29
	PLOT SCALE = $SCALE$	CHECKED -	REVISED -					CONTRACT NO. 78967			
	PLOT DATE = 11/7/2025	DATE -	REVISED -		SCALE: 1"=20'	SHEET 4 OF 4 SHEETS	STA. 107+00.00 TO STA. 113+00.00	ILLINOIS	FED. AID PROJECT		

Benchmark: "□" Cut on top of NE Wingwall of SN 039-0026. Sta. 103+53.82, Offset 15.55' Lt., Elev. 365.72.

Existing Structure: SN 039-0026 was originally built in 1958 as SBI Route 150, Section 130 BY. The bridge is 144'-6" bk.-bk. of abutments and a 35'-8" out-out of deck. The superstructure consists of varying depth RC T-Beams on stub abutments and solid wall piers. The bridge has a 5" concrete wearing surface in place. The structure will be replaced using staged construction.

No Salvage.

LICENSED STRUCTURAL ENGINEER
ROBERT WHITESIDE
081-008015
STATE OF ILLINOIS

Robert Whiteside 12/2/2025
Robert Whiteside, Illinois S.E. 081-008015 Date
Expires 11/30/2026

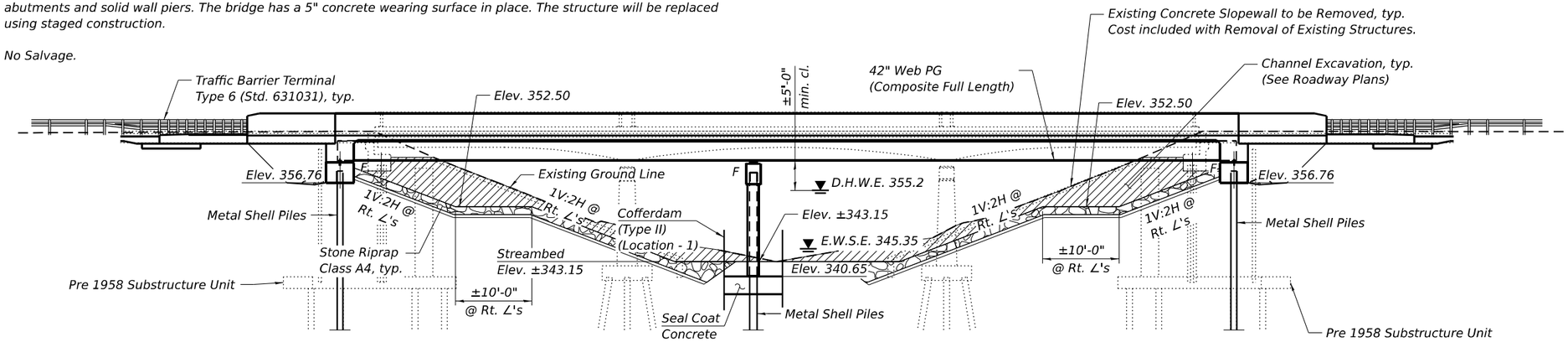

ELEVATION

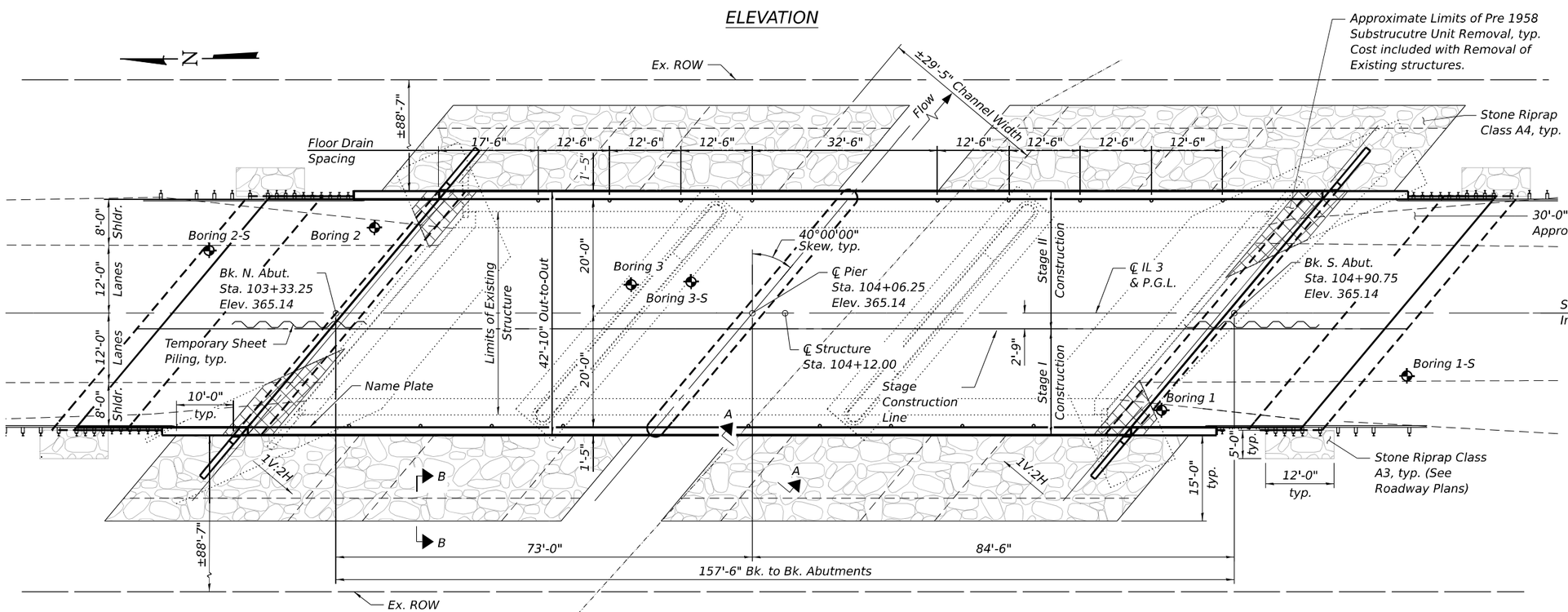

PLAN

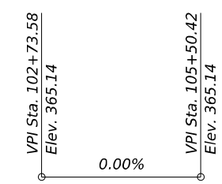

PROFILE
(Along ℄ IL 3)

APPROVED
For Structural Adequacy Only
Engineer of Bridges & Structures

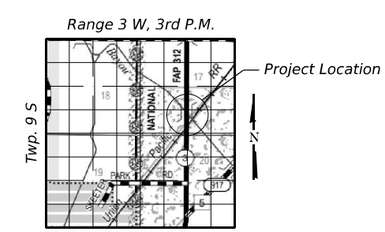

LOCATION SKETCH

LOADING HL-93

Allow 50#/sq. ft. for future wearing surface.

DESIGN SPECIFICATIONS

2020 AASHTO LRFD Bridge Design Specifications, 9th Edition

2023 AASHTO Guide Specifications for LRFD Seismic Bridge Design, 3rd Edition

DESIGN STRESSES

FIELD UNITS

f 'c = 4,000 psi (Superstructure)
f 'c = 3,500 psi (Substructure)
fy = 60,000 psi (Reinforcement)
fy = 50,000 psi (M270 Grade 50) *

* All structural steel shall be metalized.

SEISMIC DATA

2023 AASHTO Seismic Hazard
Seismic Design Category (SDC) = C
Design Spectral Acceleration at 1.0 sec. (SD1) = 0.355g
Soil Site Class = DE
Performance Level = Operational
Latitude = 37.74° N
Longitude = 89.46° W

GENERAL PLAN & ELEVATION
IL 3 OVER WORTHEN BAYOU
F.A.P. ROUTE 312 - SECTION 130B-1
JACKSON COUNTY
STATION 104+12.00
STRUCTURE NO. 039-0083

QUIGG ENGINEERING INC DESIGN FIRM REG. NO. 184.004721-0014	USER NAME = SCaro	DESIGNED - DAP	REVISED -
	0390083-78967-001-GPE.dgn	CHECKED - RPW	REVISED -
	PLOT SCALE = $SCALE$	DRAWN - ASC	REVISED -
	PLOT DATE =	CHECKED - MDC	REVISED -

STATE OF ILLINOIS
DEPARTMENT OF TRANSPORTATION

GENERAL PLAN AND ELEVATION
STRUCTURE NO. 039-0083
SHEET 1 OF 31 SHEETS

F.A.P RTE.	SECTION	COUNTY	TOTAL SHEETS	SHEET NO.
312	130B-1	JACKSON	83	30
		CONTRACT NO. 78967		
		ILLINOIS	FED. AID PROJECT	

MODEL: Default
FILE NAME: S:\2021\21IL033 - PTB 199-38 D9 - QEI - Various HIWO-12 & 20 - IL-3 BR Replace 039-0026 PH1-2\CADD\CADD Sheets\0390083-78967-001-GPE.dgn
12/2/2025 3:47:30 PM

GENERAL NOTES

All new structural steel shall be metallized. See Special Provision for "Metallizing of Structural Steel."

Calculated weight of Structural Steel = 15,360 lbs (M270 Grade 36)
156,180 lbs (M270 Grade 50)

No field welding is permitted except as specified in the contract documents.

Fasteners shall be ASTM F 3125 Grade A325 Type 1, hot-dip galvanized bolts in uncoated metallized areas. Bolts 7/8" diameter, holes 15/16" diameter, unless otherwise noted. See special provision for "Metallizing of Structural Steel".

Reinforcement bars designated (E) shall be epoxy coated.

Slipforming of the parapets is not allowed.

Bearing seat surfaces shall be constructed or adjusted to the designated elevations within a tolerance of 1/8 in. (0.01 ft.). Adjustment shall be made either by grinding the surface or by shimming the bearings.

The Seal coat design thickness is estimated based on the Cofferdam Design Water Elevation (CDWE) shown. Final cofferdam design, details and seal coat thickness shall be submitted to the Engineer for approval.

Layout of the slope protection system may be varied to suit ground conditions in the field as directed by the Engineer.

Cost to remove both existing bridge railings and existing reinforced concrete overlay included in removal of existing structures.

The existing structural steel coating contains lead. The Contractor shall take appropriate precautions to address the presence of lead on this project.

The existing bearings contain lead plates. The Contractor shall take precautions to deal with the presence of lead on this project.

INDEX OF SHEETS

1. General Plan and Elevation
2. General Data
3. Stage Construction Details
4. Temporary Sheet Piling
5. Temporary Concrete Barrier
6-8. Top of Slab Elevations
9. Top of North Approach Slab Elevations
10. Top of South Approach Slab Elevations
11. Superstructure
12. Superstructure Details
13. Diaphragm Details
14-15. Approach Slab Details
16. Framing Plan
17. Structural Steel Details
18. Design Data Tables
19. Bearing Details
20. North Abutment
21. South Abutment
22. Pier
23. Metal Shell Pile Details
24. Bar Splicer Details
25-31. Boring Logs

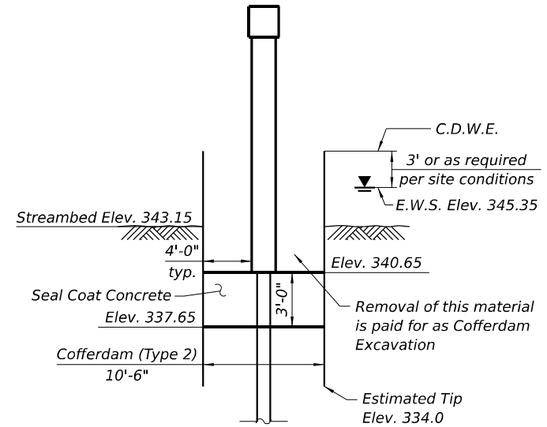

COFFERDAM DETAIL AT PIER

TOTAL BILL OF MATERIAL

ITEM	UNIT	SUPER	SUB	TOTAL
Stone Riprap, Class A4	Sq. Yd.		1,242	1,242
Filter Fabric	Sq. Yd.		1,242	1,242
Removal of Existing Structures	Each			1
Structure Excavation	Cu. Yd.		560	560
Cofferdam Excavation	Cu. Yd.		136	136
Cofferdam (Type 2) (Location - 1)	Each		1	1
Floor Drains	Each	18		18
Concrete Structures	Cu. Yd.		189.7	189.7
Concrete Superstructure	Cu. Yd.	261.2		261.2
Bridge Deck Grooving	Sq. Yd.	908		908
Seal Coat Concrete	Cu. Yd.		73.7	73.7
Protective Coat	Sq. Yd.	1,129		1,129
Concrete Superstructure (Approach Slab)	Cu. Yd.	117.0		117.0
Furnishing & Erecting Structural Steel	L. Sum	1		1
Stud Shear Connectors	Each	3,535		3,535
Reinforcement Bars, Epoxy Coated	Pound	87,490	26,140	113,630
Bar Splicers	Each	710	152	862
Furnishing Metal Shell Piles 16" x 0.375"	Foot		2,176	2,176
Driving Piles	Foot		2,176	2,176
Test Pile Metal Shells	Each		2	2
Name Plates	Each	1		1
Anchor Bolts, 1"	Each	36		36
Temporary Sheet Piling	Sq. Ft.		698	698
Granular Backfill for Structures	Cu. Yd.		348	348
Pipe Underdrains for Structures 4"	Foot		200	200
Bar Terminators	Each	86	528	614

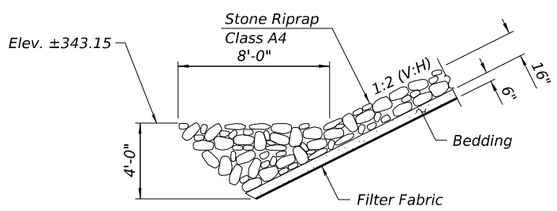

SECTION A-A

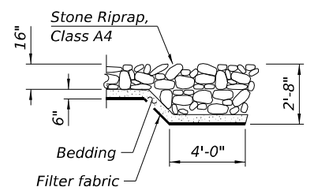

SECTION B-B

STA. 104+12.00
BUILT BY
STATE OF ILLINOIS
F.A.P. 312 Sec. 130B-1
LOADING HL-93
STR. NO. 039-0083

NAME PLATE

See Std. 515001

DESIGN SCOUR ELEVATION TABLE

Event / Limit State	Design Scour Elevations (ft.) N. Abut.	Pier	S. Abut.	Item 113
Q100	356.76	339.5	356.76	8
Q200	356.76	339.3	356.76	
Design	356.76	339.5	356.76	
Check	356.76	339.3	356.76	

WATERWAY INFORMATION

Drainage Area = 13.7 sq. mi.

Existing Overtopping Elev. = 363.70 at Sta. 96+46
Porposed Overtopping Elev. = 363.70 at Sta. 96+46

Flood Event	Freq. Yr.	Q C.F.S.	Opening Ft² Exist.	Opening Ft² Prop.	Nat. H.W.E.	Head - Ft. Exist.	Head - Ft. Prop.	Headwater El. Exist.	Headwater El. Prop.
Ten-Year	10	706	508	532	355.1	0.2	0.2	355.3	355.3
Design	50	1,020	515	541	355.2	0.3	0.2	355.5	355.4
Base	100	1,140	515	541	355.2	0.3	0.2	355.5	355.4
Scour Check	200	1,270	522	550	355.3	0.3	0.2	355.6	355.5
Max. Calc.	500	1,450	529	559	355.4	0.3	0.3	355.7	355.7

10-Year Velocity through Existing Structure = 1.4 fps
10-Year Velocity through Proposed Structure = 1.3 fps

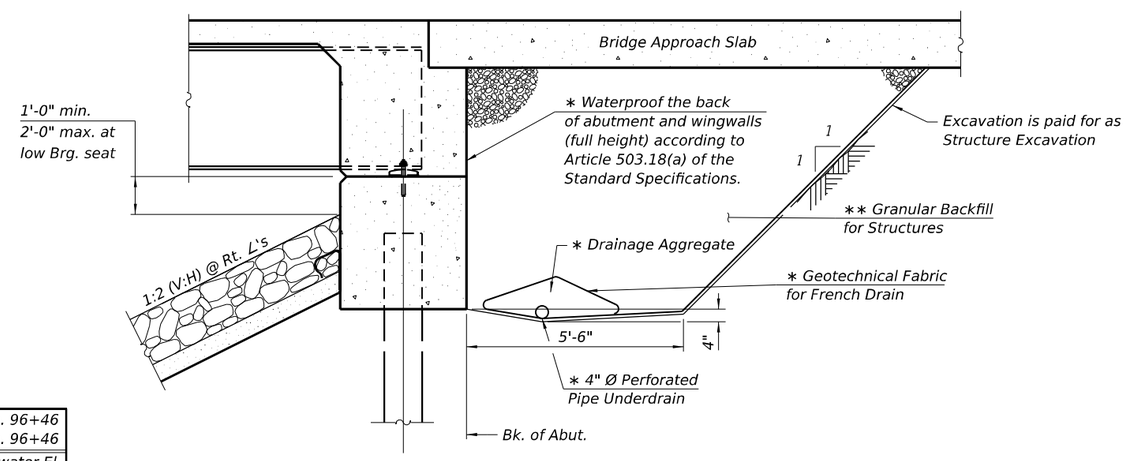

SECTION THRU INTEGRAL ABUTMENT

(Horiz. dim. at Rt. ∠'s)

∗ Included in the cost of Pipe Underdrains for Structures.

∗∗ Granular Backfill for Structures according to Section 586 of the Standard Specifications except the course aggregate shall be CA 7, CA 11, or CA 14, and shall be compacted according to Article 205.06 of the Standard Specifications.

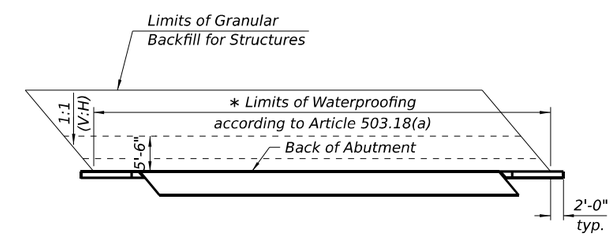

PLAN SHOWING GRANULAR BACKFILL FOR STRUCTURES

Note:
All drainage system components shall extend to 2'-0" from the end of each wingwall except an outlet pipe shall extend until intersecting with the side slopes. The pipes shall drain into concrete headwalls. (See Article 601.05 of the Standard Specifications and Highway Standard 601101).

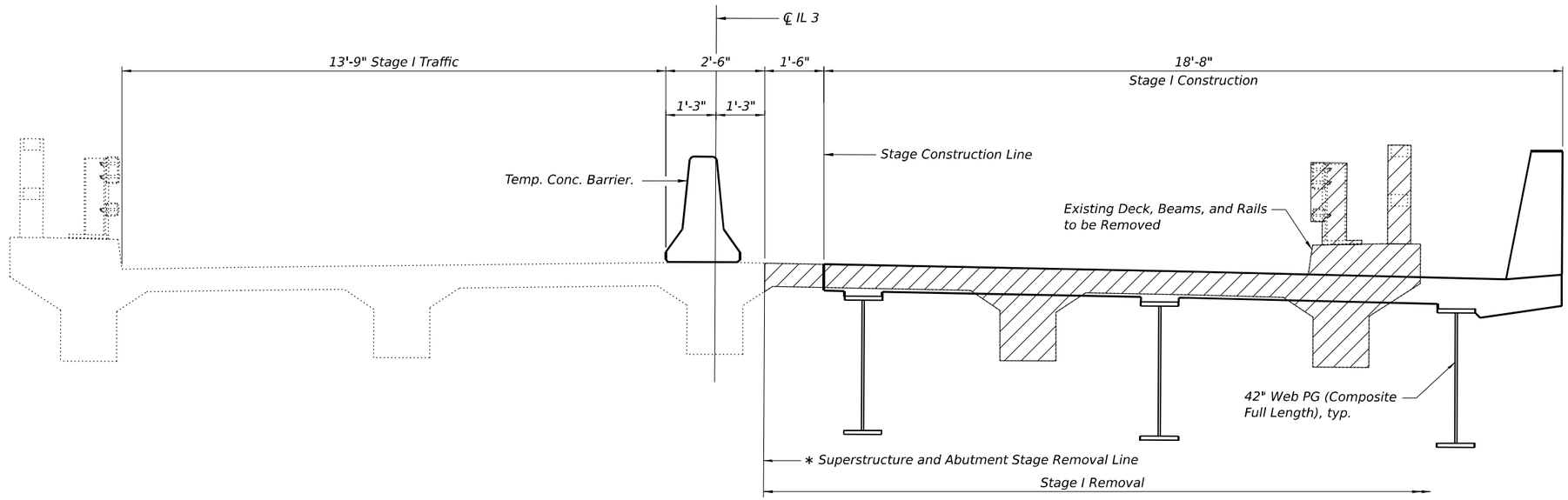

STAGE I REMOVAL, TRAFFIC, & CONSTRUCTION

(Looking South)

∗ The Stage Removal Line for the Piers will be offset 1'-0" to the west of the Superstructure and Abutment Stage Removal Line.

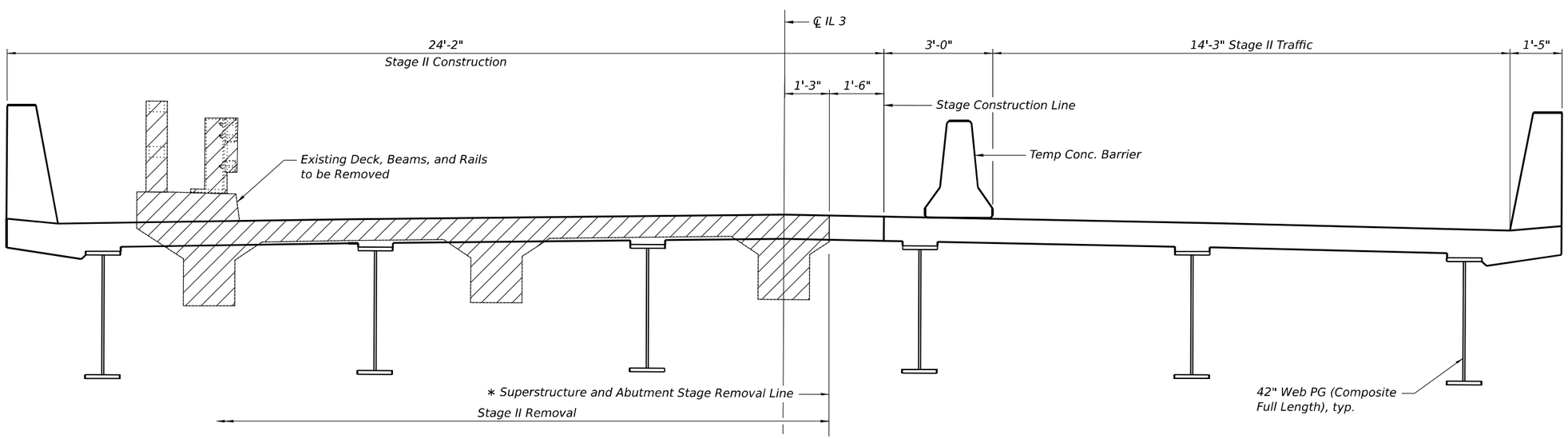

STAGE II REMOVAL, TRAFFIC, & CONSTRUCTION

(Looking South)

MODEL: Default
FILE NAME: S:\2021\21IL033 - PTB 199-38 D9 - QEI - Various I-III\WO-12 & 20 - IL-3 BR Replace 039-0026 PH1-2\CADD\CADD Sheets\0390083-78967-003-Stage Construction.dgn
12/2/2025 3:47:33 PM

QUIGG ENGINEERING INC
DESIGN FIRM REG. NO. 184.004721-0014

USER NAME = SCaro	DESIGNED - DAP	REVISED -	
0390083-78967-003-Stage Construction.dgn	CHECKED - RPW	REVISED -	
PLOT SCALE = $SCALE$	DRAWN - ASC	REVISED -	
PLOT DATE =	CHECKED - MDC	REVISED -	

STATE OF ILLINOIS
DEPARTMENT OF TRANSPORTATION

STAGE CONSTRUCTION DETAILS
STRUCTURE NO. 039-0083

SHEET 3 OF 31 SHEETS

F.A.P RTE.	SECTION	COUNTY	TOTAL SHEETS	SHEET NO.
312	130B-1	JACKSON	83	32
		CONTRACT NO. 78967		
	ILLINOIS	FED. AID PROJECT		

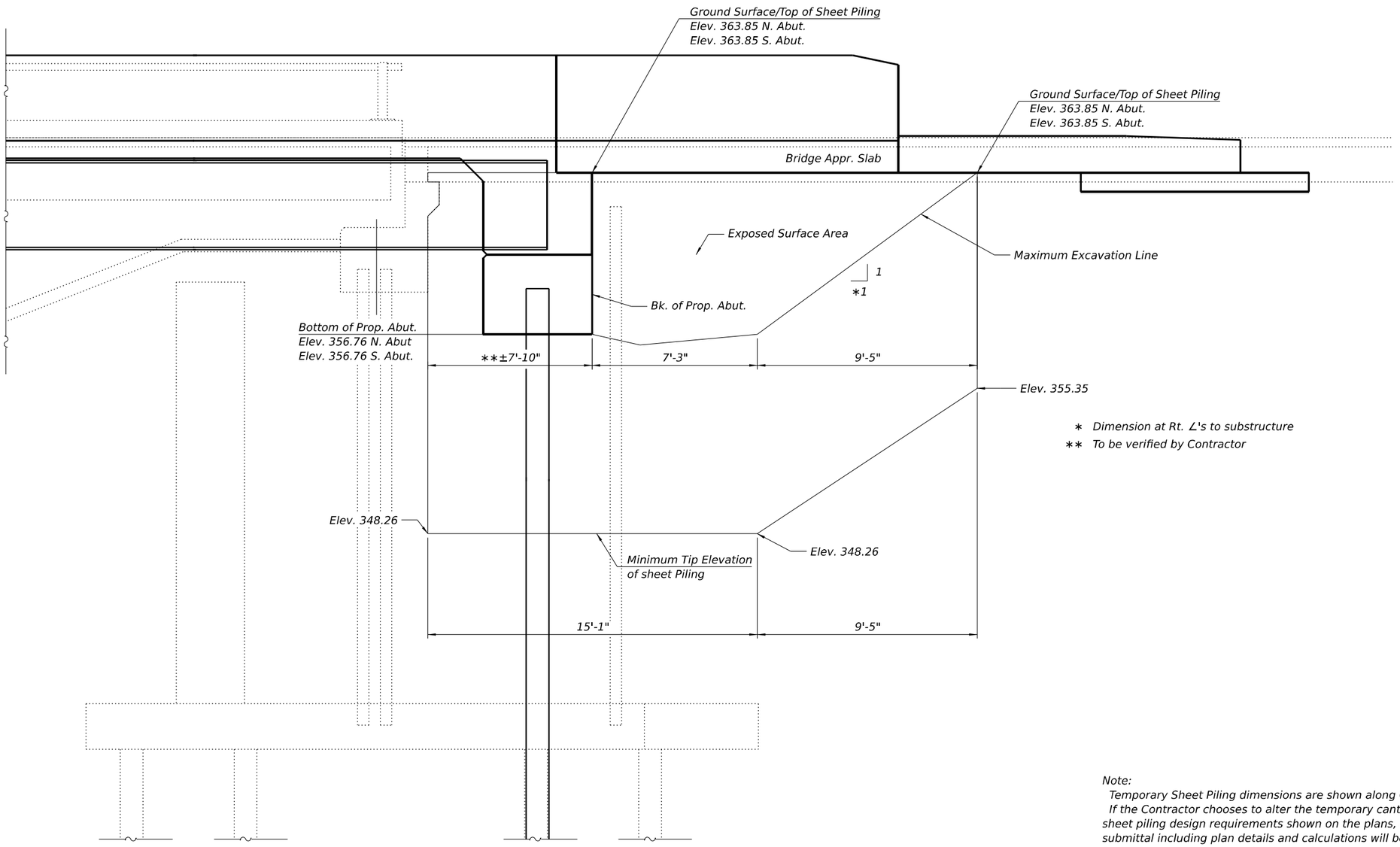

TEMPORARY SHEET PILING

(South Abutment shown, North Abutment Similar)
(Minimum Section Modulus = 4.75 in³/ft)

Note:
Temporary Sheet Piling dimensions are shown along ℄ IL 3.
If the Contractor chooses to alter the temporary cantilevered sheet piling design requirements shown on the plans, a design submittal including plan details and calculations will be required for review and acceptance by the Engineer.
The Contractor shall connect the first sheet to the existing abutment wall to ensure stability of sheets driven to the top of the existing footing. This connection shall be reviewed and accepted by the Engineer and included in the cost for Temporary Sheet Piling.

MODEL: Default
FILE NAME: S:\2012\21IL033 - PTB 199-38 D9 - QEI - Various HIWO-12 & 20 - IL-3 BR Replace 039-0026 PH1-2\CADD\CADD Sheets\0390083-78967-004-Temp. Sheet Piling.dgn

QUIGG ENGINEERING INC
DESIGN FIRM REG. NO. 184.004721-0014

USER NAME = SCaro	DESIGNED - DAP	REVISED -	
0390083-78967-004-Temp. Sheet Piling.dgn	CHECKED - RPW	REVISED -	
PLOT SCALE = $SCALE$	DRAWN - ASC	REVISED -	
PLOT DATE =	CHECKED - MDC	REVISED -	

STATE OF ILLINOIS
DEPARTMENT OF TRANSPORTATION

TEMPORARY SHEET PILING
STRUCTURE NO. 039-0083

SHEET 4 OF 31 SHEETS

F.A.P RTE.	SECTION	COUNTY	TOTAL SHEETS	SHEET NO.
312	130B-1	JACKSON	83	33
		CONTRACT NO. 78967		
	ILLINOIS	FED. AID PROJECT		

12/2/2025 3:47:34 PM

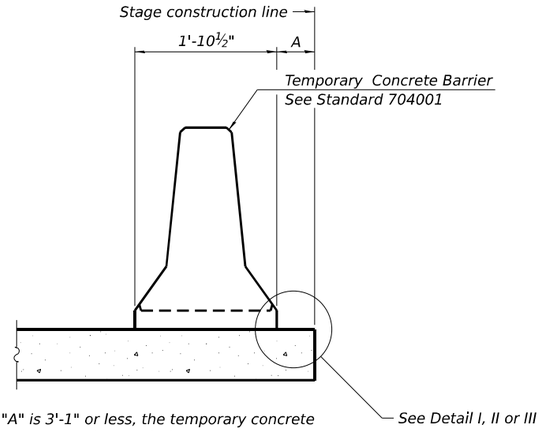

When "A" is 3'-1" or less, the temporary concrete barrier shall be restrained to the new slab according to Detail I, II or III. No restraint is required when "A" is greater than 3'-1".

NEW SLAB OR NEW DECK BEAM

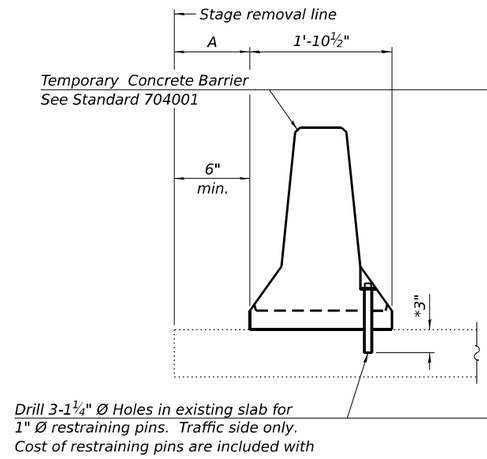

EXISTING SLAB

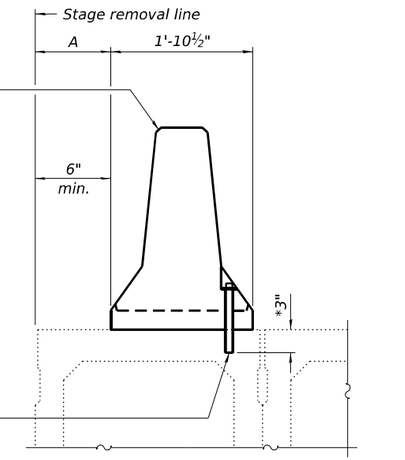

* When hot-mix asphalt wearing surface is present, embedment shall be 3" plus the wearing surface depth.

EXISTING DECK BEAM

SECTIONS THRU SLAB OR DECK BEAM

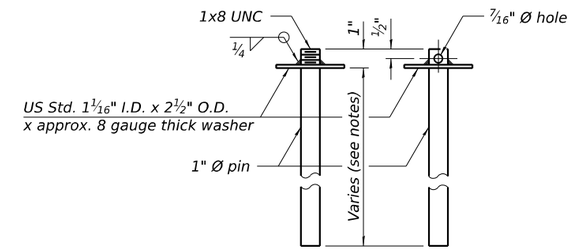

RESTRAINING PIN

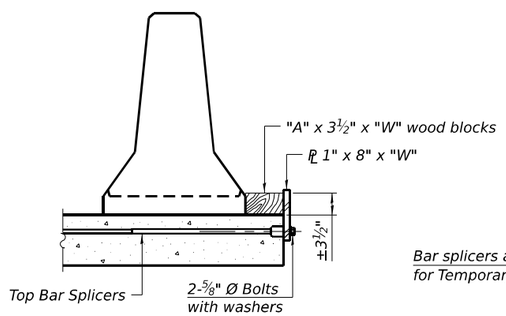

DETAIL I

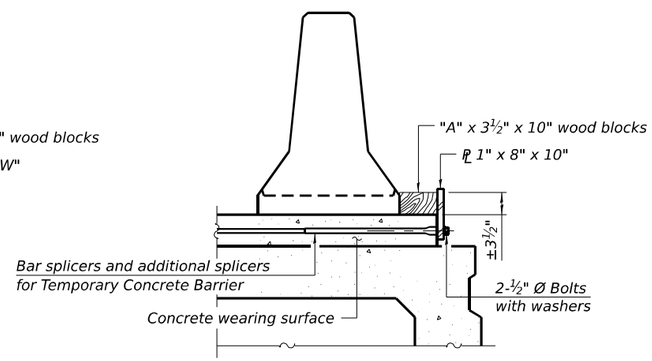

DETAIL II

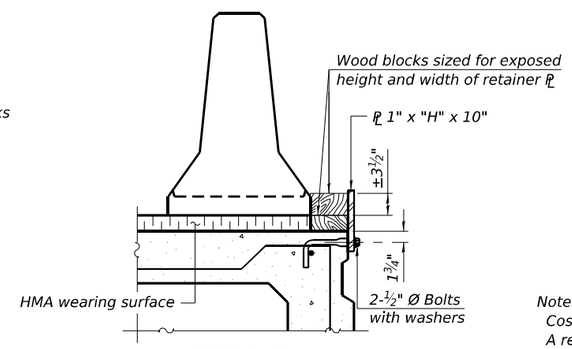

DETAIL III

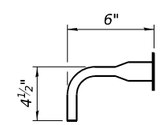

BAR SPLICER FOR #4 BAR - DETAIL III

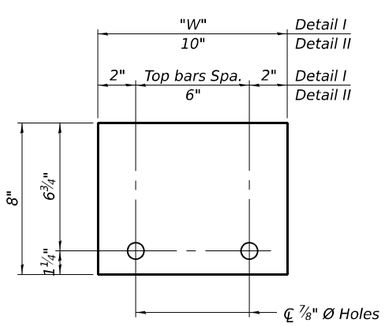

STEEL RETAINER PL 1" x 8" x "W"

(Detail I and II)

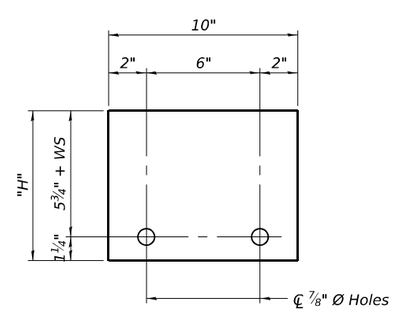

STEEL RETAINER PL 1" x "H" x 10"

(Detail III)

Notes:

Cost of retainer assembly is included with Temporary Concrete Barrier.

A retainer assembly shall be located at the approximate ℄ of each temporary concrete barrier.

The retainer plate shall not be removed until the concrete on the adjacent stage is ready to be poured. For Detail III applications the retainer plate shall not be removed until just prior to placing the adjacent beam.

When the 'A' dimension is less than 1½", the wood block shall be omitted and the barrier shall be placed in direct contact with the steel retainer plate. For deck beam applications the minimum required 'A' distance is 6" to accommodate the shear key clamping device.

Detail I - Installation for a new bridge deck or bridge slab.

Detail II - Installation for a new deck beam with an initial concrete wearing surface. Additional bar splicers shall be provided at 6'-0" centers and paired with the bar splicers of the concrete wearing surface reinforcement to accommodate the installation of the retainer assemblies. The cost of the additional bar splicers is included with the concrete wearing surface.

Detail III - Installation for a new deck beam with no initial wearing surface or with an initial hot-mix asphalt (HMA) wearing surface present. The deck beam directly beneath the temporary concrete barrier shall be fabricated with bar splicer inserts in the side of the beam, as detailed, to accommodate the installation of the retainer assemblies. A pair of bar splicers, 6" apart, shall be placed at 6'-0" centers along the length of the beam. The cost of the bar splicers is included with the deck beam.

RAILING CRITERIA

NCHRP 350 Test Level	3
Railing Weight (plf)	440

R-27

5-15-2023

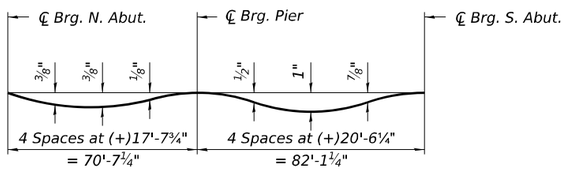

DEAD LOAD DEFLECTION DIAGRAM

(Includes weight of concrete only.)

Note:
The above deflections are not to be used in the field if the engineer is working from the grade elevations adjusted for dead load deflections as shown on Sheets 7 and 8 of 31.

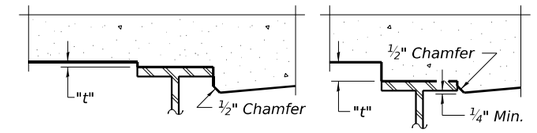

At Minimum Fillet At Maximum Fillet

To determine "t": After all structural steel has been erected, elevations of the top flanges of the beams shall be taken at intervals shown below. These elevations subtracted from the "Theoretical Grade Elevations Adjusted for Dead Load Deflection" shown on Sheets 7 and 8 of 31, minus slab thickness, equals the fillet heights "t" above top flange of beams.

FILLET HEIGHTS

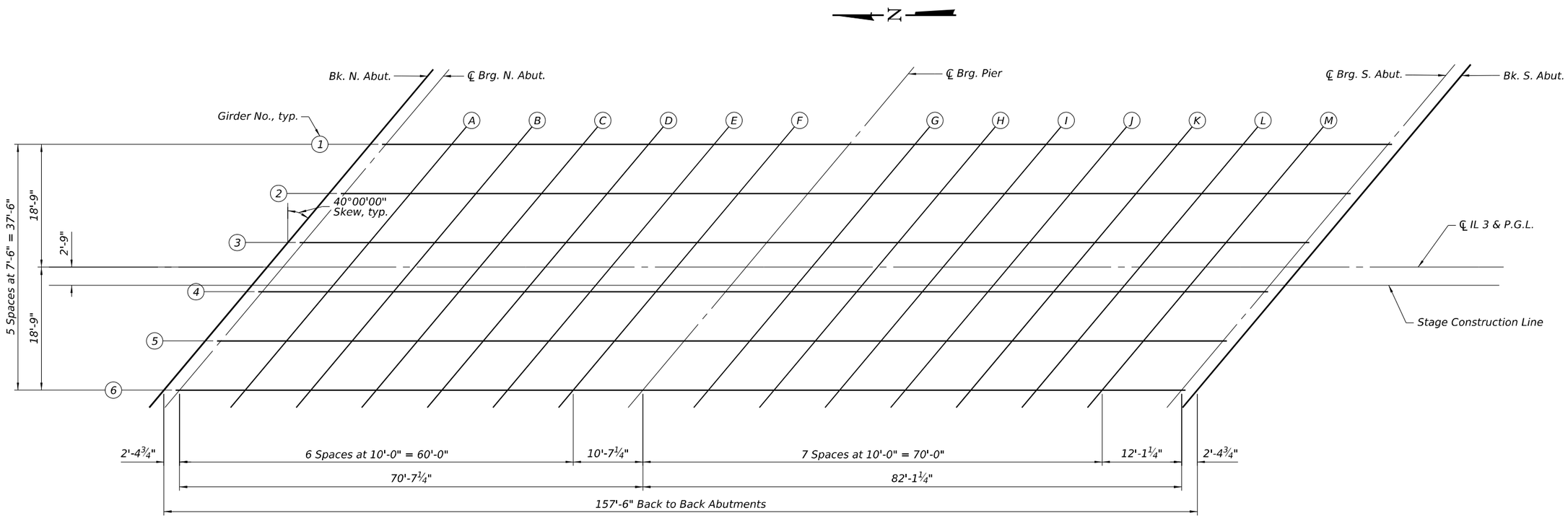

PLAN

MODEL: Default
FILE NAME: S:\2021\21IL033 - PTB 199-38 D9 - QEI - Various I-HWO-12 & 20 - IL-3 BR Replace 039-0026 PH1-2\CADD\CADD Sheets\0390083-78967-006-Top of Slab Elevations.dgn
12/2/2025 3:47:37 PM

QUIGG ENGINEERING INC
DESIGN FIRM REG. NO. 184.004721-0014

USER NAME = SCaro	DESIGNED - DAP	REVISED -	
0390083-78967-006-Top of Slab Elevations.dgn	CHECKED - RPW	REVISED -	
PLOT SCALE = $SCALE$	DRAWN - ASC	REVISED -	
PLOT DATE =	CHECKED - MDC	REVISED -	

STATE OF ILLINOIS
DEPARTMENT OF TRANSPORTATION

TOP OF SLAB ELEVATIONS (1 OF 3)
STRUCTURE NO. 039-0083

SHEET 6 OF 31 SHEETS

F.A.P RTE.	SECTION	COUNTY	TOTAL SHEETS	SHEET NO.
312	130B-1	JACKSON	83	35
		CONTRACT NO. 78967		
	ILLINOIS	FED. AID PROJECT		

GIRDER 1

Location	Station	Offset	Theoretical Grade Elevations	Theoretical Grade Elevations Adjusted for Dead Load Deflections
Bk. N. Abut.	103+48.98	-18.75	364.83	364.83
℄ Brg. N. Abut.	103+51.38	-18.75	364.83	364.83
A	103+61.38	-18.75	364.83	364.84
B	103+71.38	-18.75	364.83	364.85
C	103+81.38	-18.75	364.83	364.85
D	103+91.38	-18.75	364.83	364.84
E	104+01.38	-18.75	364.83	364.83
F	104+11.38	-18.75	364.83	364.83
℄ Brg. Pier	104+21.98	-18.75	364.83	364.83
G	104+31.98	-18.75	364.83	364.84
H	104+41.98	-18.75	364.83	364.86
I	104+51.98	-18.75	364.83	364.88
J	104+61.98	-18.75	364.83	364.90
K	104+71.98	-18.75	364.83	364.90
L	104+81.98	-18.75	364.83	364.89
M	104+91.98	-18.75	364.83	364.87
℄ Brg. S. Abut.	105+04.09	-18.75	364.83	364.83
Bk. S. Abut.	105+06.48	-18.75	364.83	364.83

GIRDER 2

Location	Station	Offset	Theoretical Grade Elevations	Theoretical Grade Elevations Adjusted for Dead Load Deflections
Bk. N. Abut.	103+42.69	-11.25	364.97	364.97
℄ Brg. N. Abut.	103+45.08	-11.25	364.97	364.97
A	103+55.08	-11.25	364.97	364.99
B	103+65.08	-11.25	364.97	365.00
C	103+75.08	-11.25	364.97	365.00
D	103+85.08	-11.25	364.97	364.99
E	103+95.08	-11.25	364.97	364.98
F	104+05.08	-11.25	364.97	364.97
℄ Brg. Pier	104+15.69	-11.25	364.97	364.97
G	104+25.69	-11.25	364.97	364.99
H	104+35.69	-11.25	364.97	365.01
I	104+45.69	-11.25	364.97	365.04
J	104+55.69	-11.25	364.97	365.06
K	104+65.69	-11.25	364.97	365.06
L	104+75.69	-11.25	364.97	365.05
M	104+85.69	-11.25	364.97	365.02
℄ Brg. S. Abut.	104+97.80	-11.25	364.97	364.97
Bk. S. Abut.	105+00.19	-11.25	364.97	364.97

GIRDER 3

Location	Station	Offset	Theoretical Grade Elevations	Theoretical Grade Elevations Adjusted for Dead Load Deflections
Bk. N. Abut.	103+36.40	-3.75	365.08	365.08
℄ Brg. N. Abut.	103+38.79	-3.75	365.08	365.08
A	103+48.79	-3.75	365.08	365.10
B	103+58.79	-3.75	365.08	365.11
C	103+68.79	-3.75	365.08	365.11
D	103+78.79	-3.75	365.08	365.11
E	103+88.79	-3.75	365.08	365.09
F	103+98.79	-3.75	365.08	365.08
℄ Brg. Pier	104+09.40	-3.75	365.08	365.08
G	104+19.40	-3.75	365.08	365.10
H	104+29.40	-3.75	365.08	365.12
I	104+39.40	-3.75	365.08	365.15
J	104+49.40	-3.75	365.08	365.17
K	104+59.40	-3.75	365.08	365.17
L	104+69.40	-3.75	365.08	365.16
M	104+79.40	-3.75	365.08	365.13
℄ Brg. S. Abut.	104+91.50	-3.75	365.08	365.08
Bk. S. Abut.	104+93.90	-3.75	365.08	365.08

℄ IL 3 & P.G.L.

Location	Station	Offset	Theoretical Grade Elevations	Theoretical Grade Elevations Adjusted for Dead Load Deflections
Bk. N. Abut.	103+33.25	0.00	365.14	365.14
℄ Brg. N. Abut.	103+35.64	0.00	365.14	365.14
A	103+45.64	0.00	365.14	365.16
B	103+55.64	0.00	365.14	365.17
C	103+65.64	0.00	365.14	365.17
D	103+75.64	0.00	365.14	365.16
E	103+85.64	0.00	365.14	365.15
F	103+95.64	0.00	365.14	365.14
℄ Brg. Pier	104+06.25	0.00	365.14	365.14
G	104+16.25	0.00	365.14	365.16
H	104+26.25	0.00	365.14	365.18
I	104+36.25	0.00	365.14	365.21
J	104+46.25	0.00	365.14	365.22
K	104+56.25	0.00	365.14	365.23
L	104+66.25	0.00	365.14	365.22
M	104+76.25	0.00	365.14	365.19
℄ Brg. S. Abut.	104+88.36	0.00	365.14	365.14
Bk. S. Abut.	104+90.75	0.00	365.14	365.14

STAGE CONSTRUCTION LINE

Location	Station	Offset	Theoretical Grade Elevations	Theoretical Grade Elevations Adjusted for Dead Load Deflections
Bk. N. Abut.	103+30.94	2.75	365.10	365.10
℄ Brg. N. Abut.	103+33.34	2.75	365.10	365.10
A	103+43.34	2.75	365.10	365.12
B	103+53.34	2.75	365.10	365.13
C	103+63.34	2.75	365.10	365.13
D	103+73.34	2.75	365.10	365.12
E	103+83.34	2.75	365.10	365.11
F	103+93.34	2.75	365.10	365.10
℄ Brg. Pier	104+03.94	2.75	365.10	365.10
G	104+13.94	2.75	365.10	365.11
H	104+23.94	2.75	365.10	365.14
I	104+33.94	2.75	365.10	365.17
J	104+43.94	2.75	365.10	365.18
K	104+53.94	2.75	365.10	365.19
L	104+63.94	2.75	365.10	365.17
M	104+73.94	2.75	365.10	365.15
℄ Brg. S. Abut.	104+86.05	2.75	365.10	365.10
Bk. S. Abut.	104+88.44	2.75	365.10	365.10

GIRDER 4

Location	Station	Offset	Theoretical Grade Elevations	Theoretical Grade Elevations Adjusted for Dead Load Deflections
Bk. N. Abut.	103+30.10	3.75	365.08	365.08
℄ Brg. N. Abut.	103+32.50	3.75	365.08	365.08
A	103+42.50	3.75	365.08	365.10
B	103+52.50	3.75	365.08	365.11
C	103+62.50	3.75	365.08	365.11
D	103+72.50	3.75	365.08	365.11
E	103+82.50	3.75	365.08	365.09
F	103+92.50	3.75	365.08	365.08
℄ Brg. Pier	104+03.10	3.75	365.08	365.08
G	104+13.10	3.75	365.08	365.10
H	104+23.10	3.75	365.08	365.12
I	104+33.10	3.75	365.08	365.15
J	104+43.10	3.75	365.08	365.17
K	104+53.10	3.75	365.08	365.17
L	104+63.10	3.75	365.08	365.16
M	104+73.10	3.75	365.08	365.13
℄ Brg. S. Abut.	104+85.21	3.75	365.08	365.08
Bk. S. Abut.	104+87.60	3.75	365.08	365.08

GIRDER 5

Location	Station	Offset	Theoretical Grade Elevations	Theoretical Grade Elevations Adjusted for Dead Load Deflections
Bk. N. Abut.	103+23.81	11.25	364.97	364.97
℄ Brg. N. Abut.	103+26.20	11.25	364.97	364.97
A	103+36.20	11.25	364.97	364.99
B	103+46.20	11.25	364.97	365.00
C	103+56.20	11.25	364.97	365.00
D	103+66.20	11.25	364.97	364.99
E	103+76.20	11.25	364.97	364.98
F	103+86.20	11.25	364.97	364.97
℄ Brg. Pier	103+96.81	11.25	364.97	364.97
G	104+06.81	11.25	364.97	364.99
H	104+16.81	11.25	364.97	365.01
I	104+26.81	11.25	364.97	365.04
J	104+36.81	11.25	364.97	365.06
K	104+46.81	11.25	364.97	365.06
L	104+56.81	11.25	364.97	365.05
M	104+66.81	11.25	364.97	365.02
℄ Brg. S. Abut.	104+78.92	11.25	364.97	364.97
Bk. S. Abut.	104+81.31	11.25	364.97	364.97

GIRDER 6

Location	Station	Offset	Theoretical Grade Elevations	Theoretical Grade Elevations Adjusted for Dead Load Deflections
Bk. N. Abut	103+17.52	18.75	364.83	364.83
℄ Brg. N. Abut.	103+19.91	18.75	364.83	364.83
A	103+29.91	18.75	364.83	364.84
B	103+39.91	18.75	364.83	364.85
C	103+49.91	18.75	364.83	364.85
D	103+59.91	18.75	364.83	364.84
E	103+69.91	18.75	364.83	364.83
F	103+79.91	18.75	364.83	364.83
℄ Brg. Pier	103+90.52	18.75	364.83	364.83
G	104+00.52	18.75	364.83	364.84
H	104+10.52	18.75	364.83	364.86
I	104+20.52	18.75	364.83	364.88
J	104+30.52	18.75	364.83	364.90
K	104+40.52	18.75	364.83	364.90
L	104+50.52	18.75	364.83	364.89
M	104+60.52	18.75	364.83	364.87
℄ Brg. S. Abut.	104+72.62	18.75	364.83	364.83
Bk. S. Abut.	104+75.02	18.75	364.83	364.83

EAST SHOULDER LINE

Location	Station	Offset	Theoretical Grade Elevations
N. End of N. Appr. Slab	103+21.34	-20.00	364.80
A3	103+31.34	-20.00	364.80
A4	103+41.34	-20.00	364.80
S. End of N. Appr. Slab	103+51.34	-20.00	364.80

EAST EDGE OF ROADWAY

Location	Station	Offset	Theoretical Grade Elevations
N. End of N. Appr. Slab	103+14.62	-12.00	364.96
A1	103+24.62	-12.00	364.96
A2	103+34.62	-12.00	364.96
S. End of N. Appr. Slab	103+44.62	-12.00	364.96

℄ IL 3 & P.G.L.

Location	Station	Offset	Theoretical Grade Elevations
N. End of N. Appr. Slab	103+04.56	0.00	365.14
A1	103+14.56	0.00	365.14
A2	103+24.56	0.00	365.14
S. End of N. Appr. Slab	103+34.56	0.00	365.14

STAGE CONSTRUCTION LINE

Location	Station	Offset	Theoretical Grade Elevations
N. End of N. Appr. Slab	103+02.25	2.75	365.10
A1	103+12.25	2.75	365.10
A2	103+22.25	2.75	365.10
S. End of N. Appr. Slab	103+32.25	2.75	365.10

WEST EDGE OF ROADWAY

Location	Station	Offset	Theoretical Grade Elevations
N. End of N. Appr. Slab	102+94.49	12.00	364.96
A1	103+04.49	12.00	364.96
A2	103+14.49	12.00	364.96
S. End of N. Appr. Slab	103+24.49	12.00	364.96

WEST SHOULDER LINE

Location	Station	Offset	Theoretical Grade Elevations
N. End of N. Appr. Slab	102+87.77	20.00	364.80
A1	102+97.77	20.00	364.80
A2	103+07.77	20.00	364.80
S. End of N. Appr. Slab	103+17.77	20.00	364.80

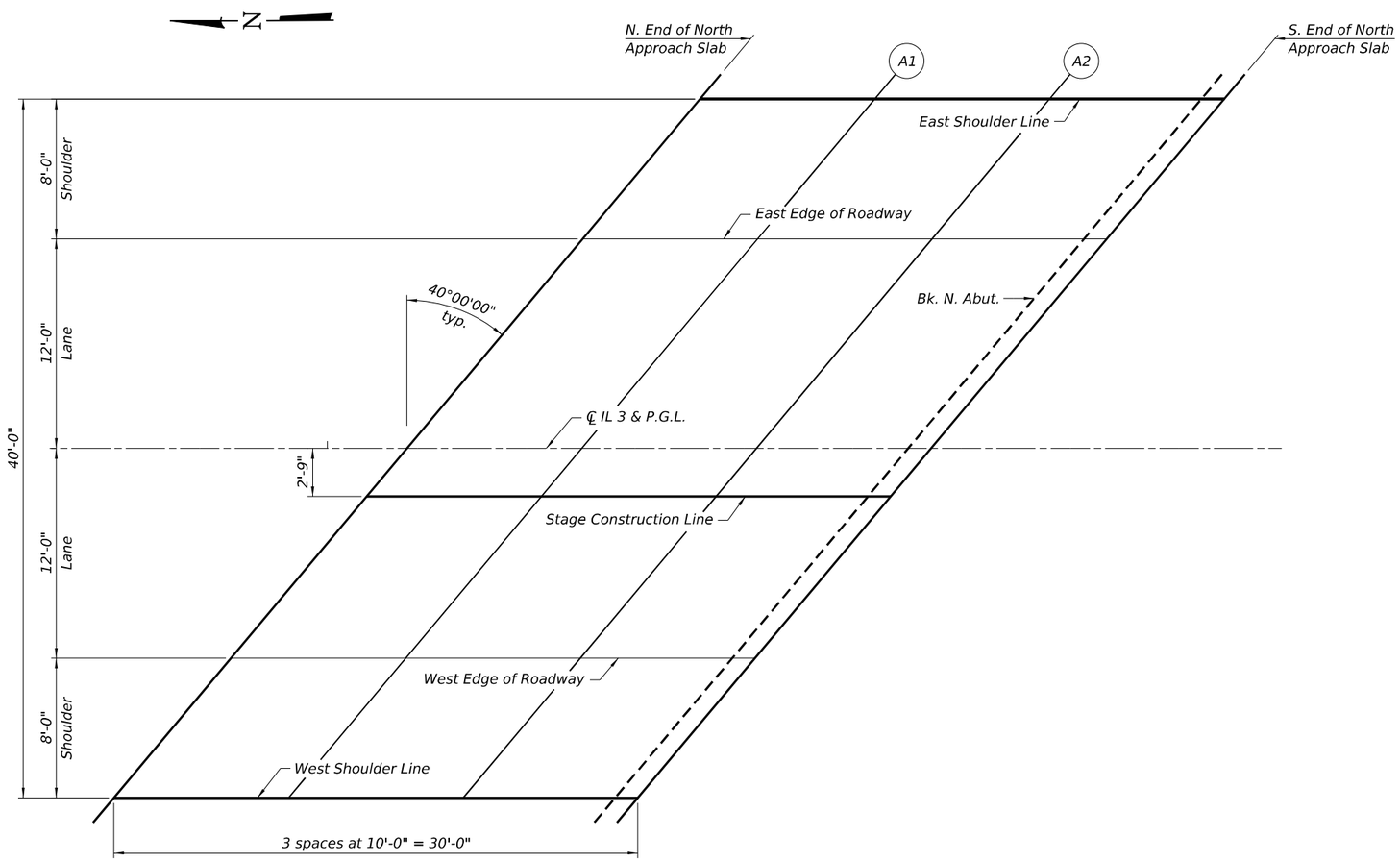

PLAN

E-AS 5-15-2023

MODEL: Default
FILE NAME: S:\2021\21IL033 - PTB 199-38 D9 - QEI - Various HRWC-12 & 20 - IL-3 BR Replace 039-0026 PH1-2\CAD\DC\ADD Sheets\0390083-78967-009-Top of N. Appr. Slab Elev.dgn
12/2/2025 3:47:41 PM

QUIGG ENGINEERING INC
DESIGN FIRM REG. NO. 184.004721-0014

USER NAME = SCaro	DESIGNED - DAP	REVISED -	
0390083-78967-009-Top of N. Appr. Slab Elev.dgn	CHECKED - RPW	REVISED -	
PLOT SCALE = $SCALE$	DRAWN - ASC	REVISED -	
PLOT DATE =	CHECKED - MDC	REVISED -	

STATE OF ILLINOIS
DEPARTMENT OF TRANSPORTATION

TOP OF NORTH APPROACH SLAB ELEVATIONS
STRUCTURE NO. 039-0083

SHEET 9 OF 31 SHEETS

F.A.P RTE.	SECTION	COUNTY	TOTAL SHEETS	SHEET NO.
312	130B-1	JACKSON	83	38

CONTRACT NO. 78967

ILLINOIS FED. AID PROJECT

EAST SHOULDER LINE

Location	Station	Offset	Theoretical Grade Elevations
N. End of S. Appr. Slab	105+06.23	-20.00	364.80
A3	105+16.23	-20.00	364.80
A4	105+26.23	-20.00	364.80
S. End of S. Appr. Slab	105+36.23	-20.00	364.80

EAST EDGE OF ROADWAY

Location	Station	Offset	Theoretical Grade Elevations
N. End of S. Appr. Slab	104+99.51	-12.00	364.96
A3	105+09.51	-12.00	364.96
A4	105+19.51	-12.00	364.96
S. End of S. Appr. Slab	105+26.51	-12.00	364.96

℄ IL 3 & P.G.L.

Location	Station	Offset	Theoretical Grade Elevations
N. End of S. Appr. Slab	104+89.44	0.00	365.14
A3	104+99.44	0.00	365.14
A4	105+09.44	0.00	365.14
S. End of S. Appr. Slab	105+19.44	0.00	365.14

STAGE CONSTRUCTION LINE

Location	Station	Offset	Theoretical Grade Elevations
N. End of S. Appr. Slab	104+87.14	2.75	365.10
A3	104+97.14	2.75	365.10
A4	105+07.14	2.75	365.10
S. End of S. Appr. Slab	105+17.14	2.75	365.10

WEST EDGE OF ROADWAY

Location	Station	Offset	Theoretical Grade Elevations
N. End of S. Appr. Slab	104+79.38	12.00	364.96
A3	104+89.38	12.00	364.96
A4	104+99.38	12.00	364.96
S. End of S. Appr. Slab	105+09.38	12.00	364.96

WEST SHOULDER LINE

Location	Station	Offset	Theoretical Grade Elevations
N. End of S. Appr. Slab	104+72.66	20.00	364.80
A3	104+82.66	20.00	364.80
A4	104+92.66	20.00	364.80
S. End of S. Appr. Slab	105+02.66	20.00	364.80

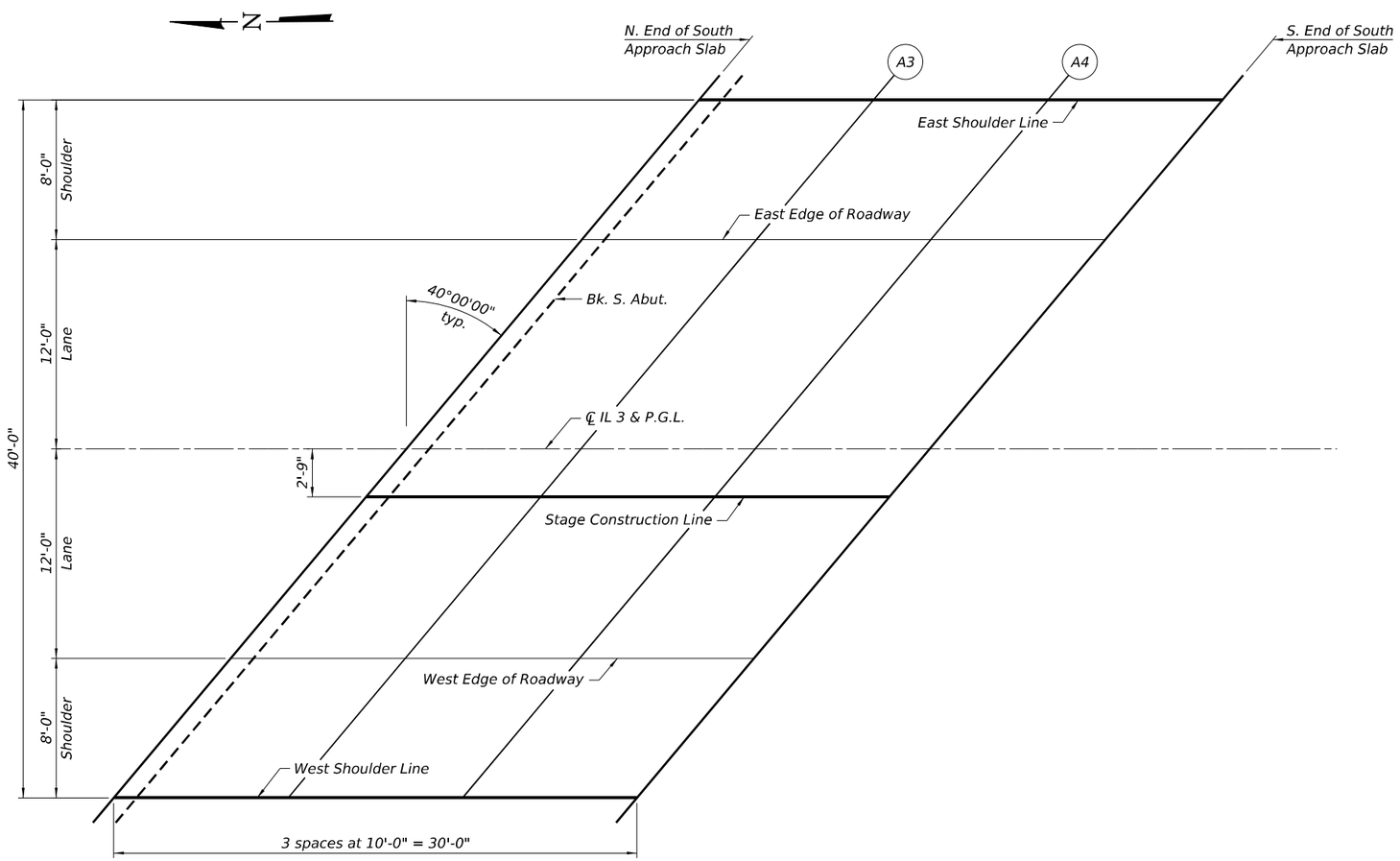

PLAN

E-AS 5-15-2023

MODEL: Default
FILE NAME: S:\2021\21IL033 - PTB 199-38 D9 - QEI - Various HRWC-12 & 20 - IL-3 BR Replace 039-0026 PH1-2\CAD\DICADD Sheets\0390083-78967-010-Top of S. Appr. Slab Elev.dgn
12/2/2025 3:47:42 PM

QUIGG ENGINEERING INC
DESIGN FIRM REG. NO. 184.004721-0014

USER NAME = SCaro	DESIGNED - DAP	REVISED -	
0390083-78967-010-Top of S. Appr. Slab Elev.dgn	CHECKED - RPW	REVISED -	
PLOT SCALE = $SCALE$	DRAWN - ASC	REVISED -	
PLOT DATE =	CHECKED - MDC	REVISED -	

STATE OF ILLINOIS
DEPARTMENT OF TRANSPORTATION

TOP OF SOUTH APPROACH SLAB ELEVATIONS
STRUCTURE NO. 039-0083

SHEET 10 OF 31 SHEETS

F.A.P RTE.	SECTION	COUNTY	TOTAL SHEETS	SHEET NO.
312	130B-1	JACKSON	83	39

CONTRACT NO. 78967

ILLINOIS FED. AID PROJECT

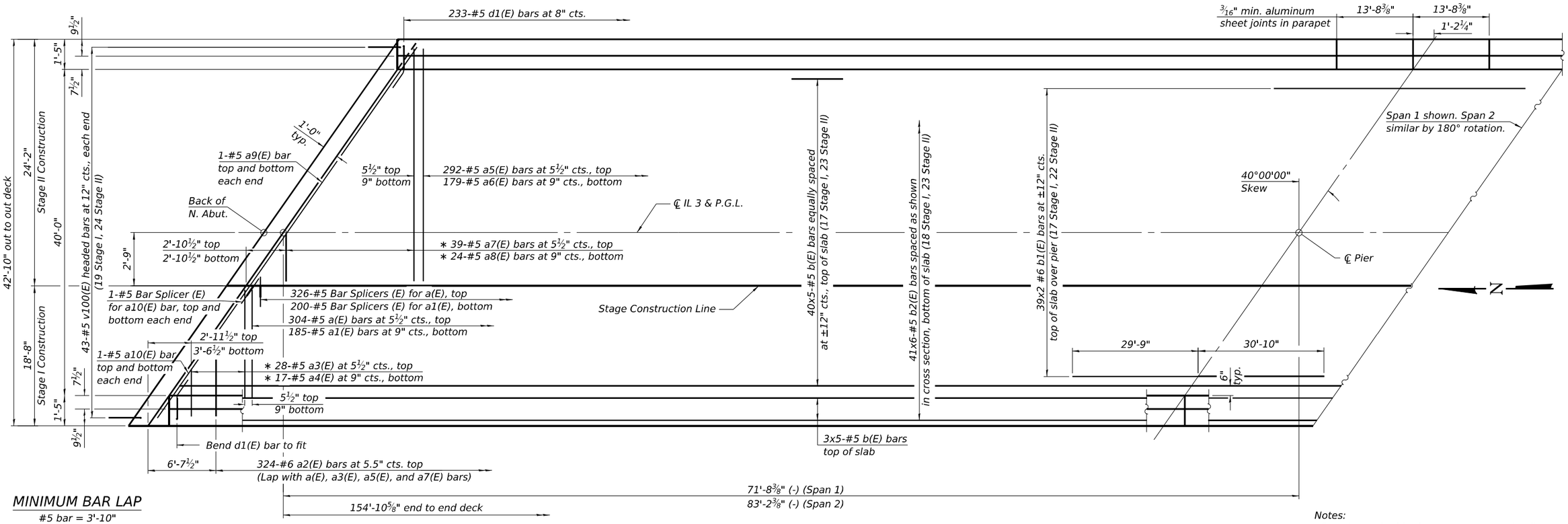

MINIMUM BAR LAP

#5 bar = 3'-10"
#6 bar = 4'-10"
* See Field Cutting Diagram on sheet 12 of 31.

PARTIAL PLAN

Notes:
See sheet 12 of 31 for superstructure details and Bill of Material.
Bars indicated thus 20x3-#5 etc. indicates 20 lines of bars with 3 lengths per line.
For location of floor drains, see sheet 1 of 31.
For bar splicer details, see sheet 24 of 31.

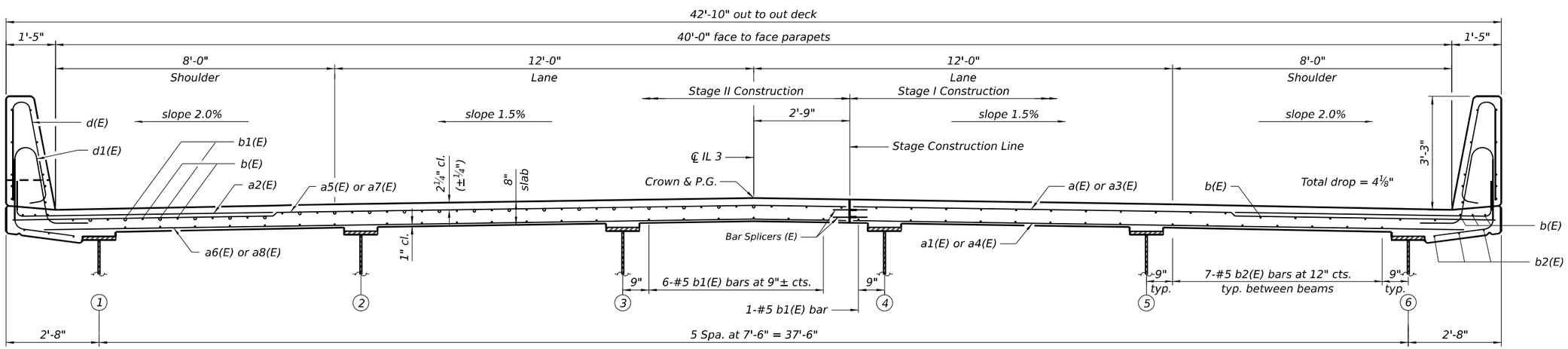

NEAR PIER

NEAR MIDSPAN

CROSS SECTION

(Looking South)

MODEL: Default
FILE NAME: S:\2021\21IL033 - PTB 199-38 D9 - QEI - Various HIWC-12 & 20 - IL-3 BR Replace 039-0026 PH1-2\CADD\CADD Sheets\0390083-78967-011-Superstructure.dgn

QUIGG ENGINEERING INC
DESIGN FIRM REG. NO. 184.004721-0014

USER NAME = SCaro	DESIGNED - DAP	REVISED -	
0390083-78967-011-Superstructure.dgn	CHECKED - RPW	REVISED -	
PLOT SCALE = $SCALE$	DRAWN - ASC	REVISED -	
PLOT DATE =	CHECKED - MDC	REVISED -	

STATE OF ILLINOIS
DEPARTMENT OF TRANSPORTATION

SUPERSTRUCTURE
STRUCTURE NO. 039-0083

SHEET 11 OF 31 SHEETS

F.A.P RTE.	SECTION	COUNTY	TOTAL SHEETS	SHEET NO.
312	130B-1	JACKSON	83	40
		CONTRACT NO. 78967		
		ILLINOIS	FED. AID PROJECT	

12/2/2025 3:47:43 PM

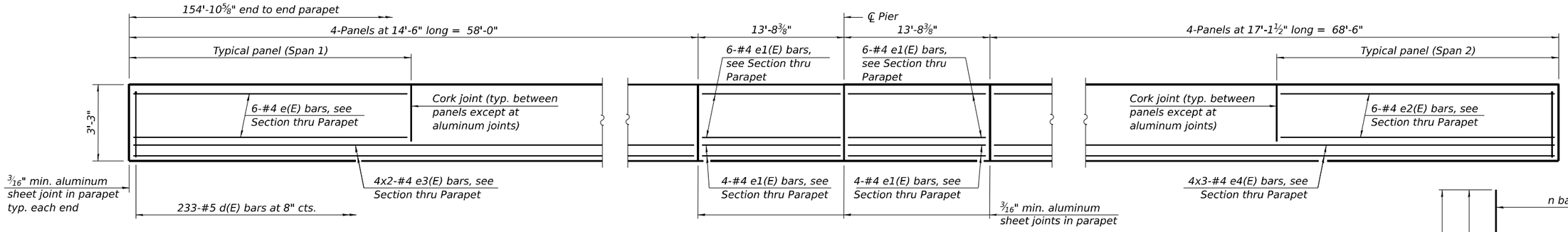

INSIDE ELEVATION OF PARAPET

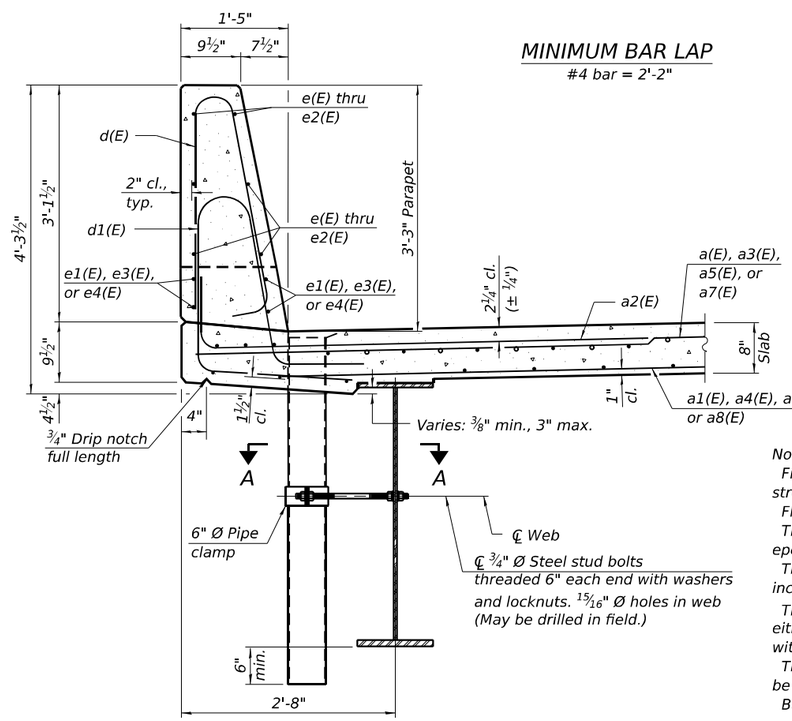

MINIMUM BAR LAP

#4 bar = 2'-2"

SECTION THRU PARAPET

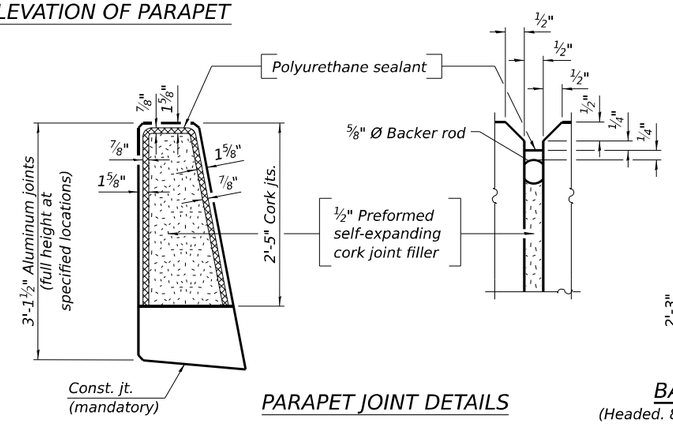

PARAPET JOINT DETAILS

BAR CUTTING INFORMATION TABLE

Bar	n	A	B	C
a3(E)	28	20'-10"	17'-10"	3'-0"
a4(E)	17	20'-7"	17'-7"	3'-0"
a7(E)	39	26'-6"	23'-6"	3'-0"
a8(E)	24	26'-0"	23'-0"	3'-0"

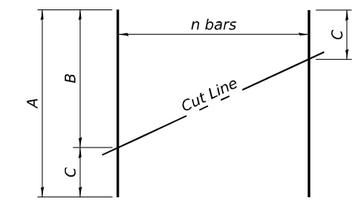

FIELD CUTTING DIAGRAM

Order bars full length. Cut as shown and use remainder of bars in opposite end of deck.

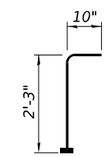

BAR v100(E)

(Headed. 86-#5 Bar terminators)

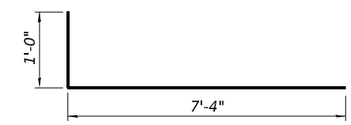

BAR a2(E)

SUPERSTRUCTURE BILL OF MATERIAL

Bar	No.	Size	Length	Shape
a(E)	304	#5	18'-4"	
a1(E)	185	#5	17'-10"	
a2(E)	324	#6	8'-4"	
a3(E)	28	#5	20'-10"	
a4(E)	17	#5	20'-7"	
a5(E)	292	#5	23'-10"	
a6(E)	179	#5	23'-4"	
a7(E)	39	#5	26'-6"	
a8(E)	24	#5	26'-0"	
a9(E)	4	#5	30'-5"	
a10(E)	4	#5	23'-3"	
b(E)	230	#5	34'-2"	
b1(E)	78	#6	32'-10"	
b2(E)	246	#5	29'-2"	
d(E)	466	#5	6'-5"	
d1(E)	466	#5	7'-11"	
e(E)	48	#4	14'-2"	
e1(E)	40	#4	13'-5"	
e2(E)	48	#4	16'-10"	
e3(E)	16	#4	30'-2"	
e4(E)	24	#4	24'-5"	
m10(E)	10	#6	31'-1"	
m11(E)	32	#6	9'-4"	
m12(E)	16	#6	3'-0"	
m13(E)	8	#6	8'-0"	
m14(E)	10	#6	23'-11"	
s10(E)	82	#5	8'-6"	
s11(E)	82	#5	12'-4"	
v100(E)	86	#5	3'-1"	
Reinforcement Bars, Epoxy Coated			Lbs.	56,440
Concrete Superstructure			Cu. Yds.	253.4

Bars indicated thus 1 x 2-#4 etc. indicates 1 line of bars with 2 lengths per line.

Notes:

Fiberglass pipe shall conform to ASTM D2996, with short-time rupture strength hoop tensile stress of 30,000 p.s.i. minimum.

Floor drains need not be painted.

The top portion of aluminum floor drains shall be coated with 5 mils of either bitumen paint or epoxy paint to minimize reaction with wet concrete.

The clamping device shall be galvanized according to AASHTO M 232. Cost of clamping device included with Floor Drains.

The 3/16" min. aluminum sheet shall be ASTM B 209 alloy 3003-H14 and coated with 5 mils of either bitumen paint or epoxy paint to minimize reaction with wet concrete. Cost included with Concrete Superstructure.

The polyurethane sealant shall be according to Article 1050.04 of the Std. Spec. and the color shall be gray.

Bar terminators, paid for separately. See Total Bill of Material.

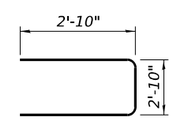

BAR s10(E)

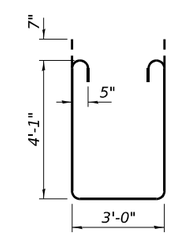

BAR s11(E)

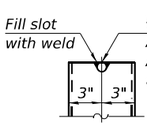

ALUMINUM TUBE

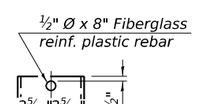

FIBERGLASS PIPE

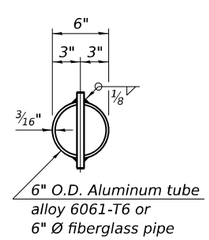

TOP PLAN

(Showing aluminum tube)

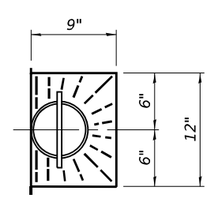

TOP PLAN

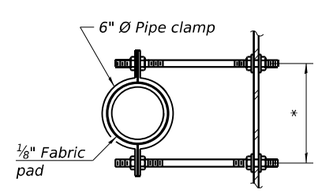

SECTION A-A

*Dimension as required by pipe clamp

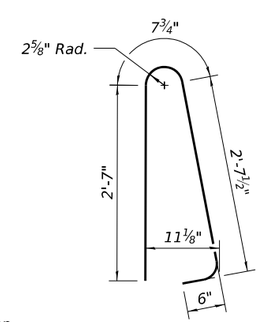

BAR d(E)

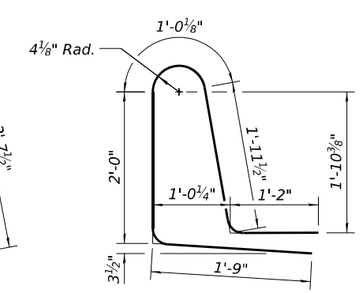

BAR d1(E)

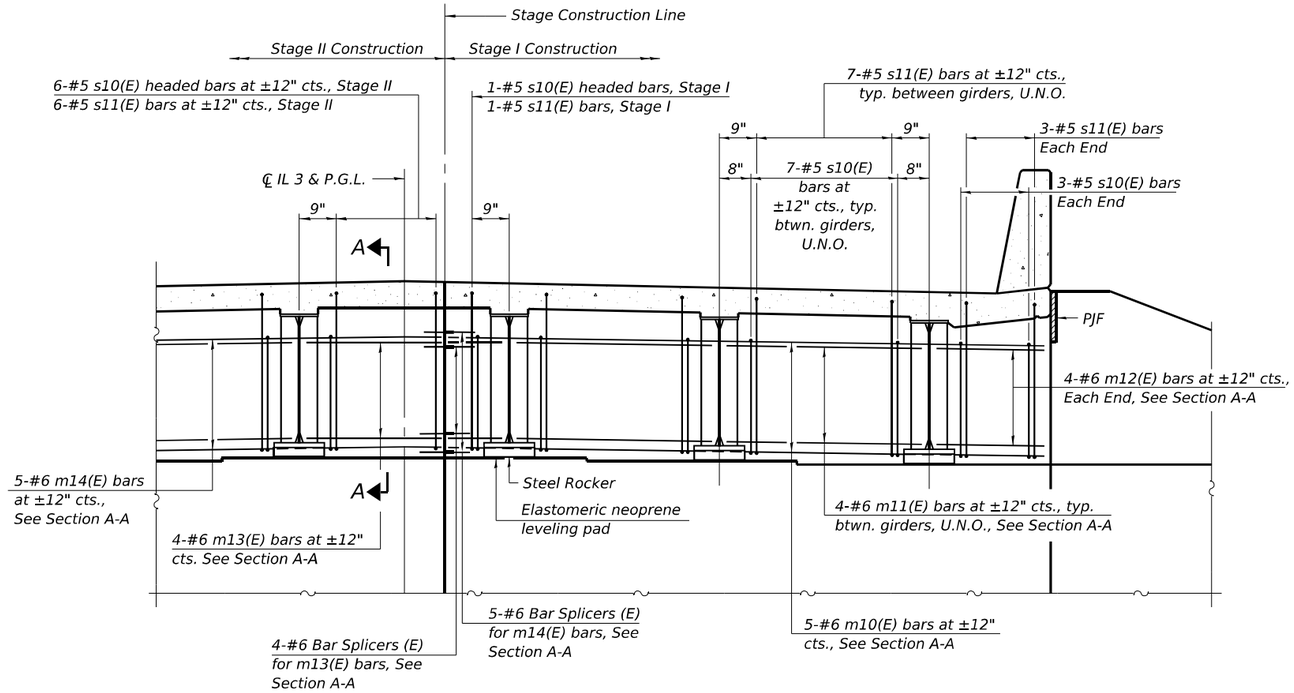

DIAPHRAGM AT ABUTMENT

(South Abutment shown, North Abutment Similar)

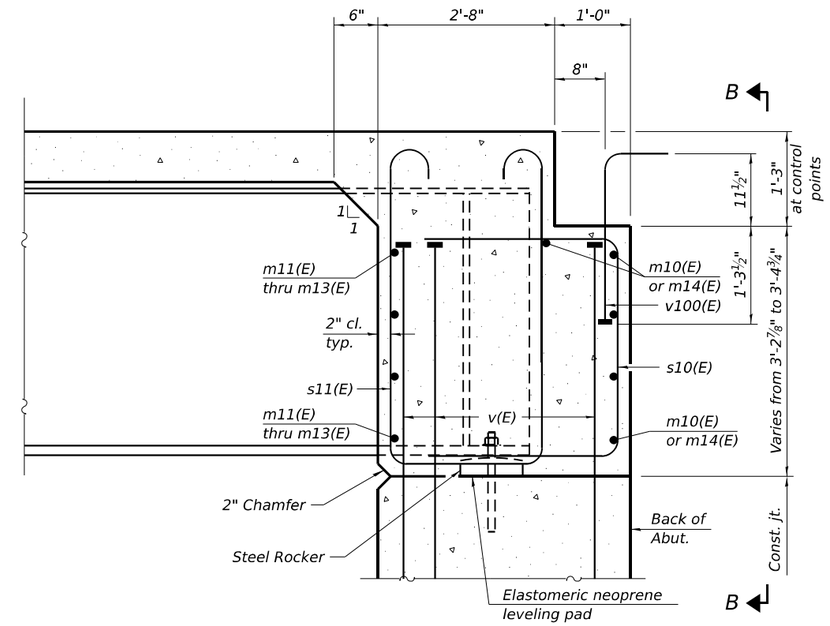

SECTION A-A

(at Rt. ∠'s)

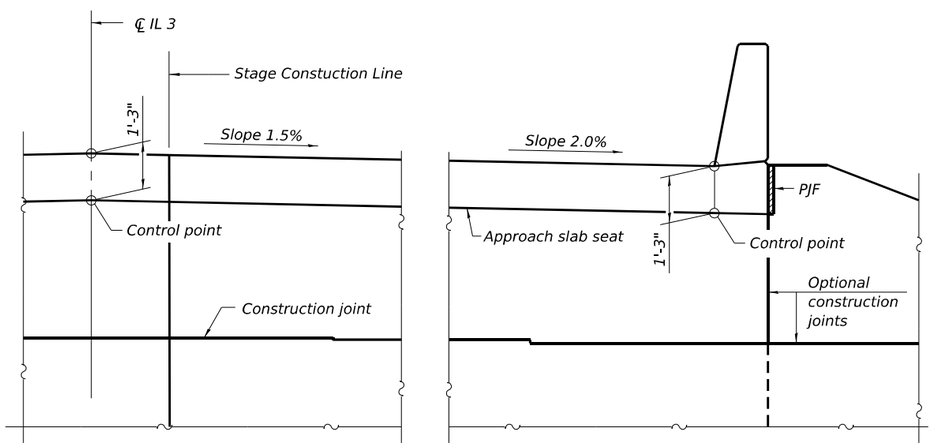

VIEW B-B

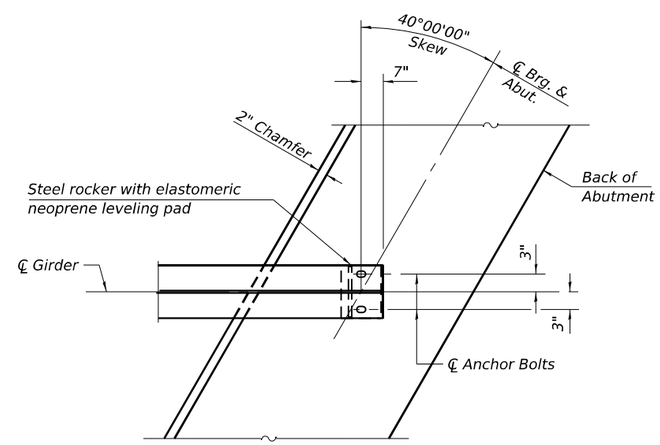

PLAN AT ABUTMENT

(Showing bottom flange of girder)

Notes:
See sheets 11 and 12 of 31 for superstructure details and Bill of Material.
See sheet 14 of 31 for PJF details.
The s10(E) and s11(E) bars shall be placed parallel to the girders. Spacing for these bars shall be at right angles to the girders.
The approach slab seat shall have a constant slope determined from the control points shown.
For bar splicer details, see sheet 24 of 31.

DIA-SB-L 4-4-2025

QUIGG ENGINEERING INC
DESIGN FIRM REG. NO. 184.004721-0014

USER NAME = SCaro	DESIGNED - DAP	REVISED -	
0390083-78967-013-Diaphragm Details.dgn	CHECKED - RPW	REVISED -	
PLOT SCALE = $SCALE$	DRAWN - ASC	REVISED -	
PLOT DATE =	CHECKED - MDC	REVISED -	

STATE OF ILLINOIS
DEPARTMENT OF TRANSPORTATION

DIAPHRAGM DETAILS
STRUCTURE NO. 039-0083

SHEET 13 OF 31 SHEETS

F.A.P RTE.	SECTION	COUNTY	TOTAL SHEETS	SHEET NO.
312	130B-1	JACKSON	83	42
		CONTRACT NO. 78967		
		ILLINOIS	FED. AID PROJECT	

MODEL: Default
FILE NAME: S:\2021\21IL033 - PTB 199-38 D9 - QEI - Various HIWO-12 & 20 - IL-3 BR Replace 039-0026 PH1-2\CADD\CADD Sheets\0390083-78967-013-Diaphragm Details.dgn
12/2/2025 3:47:46 PM

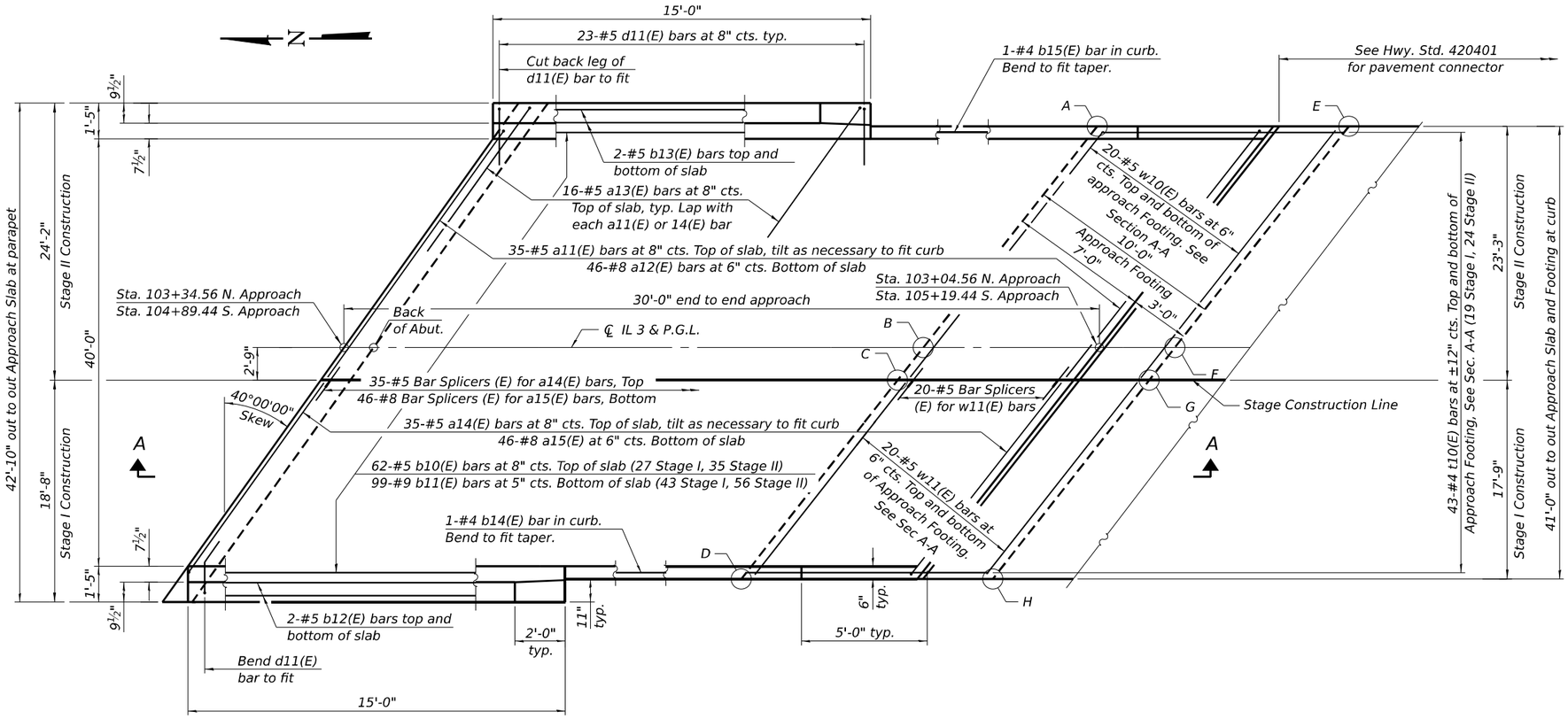

PLAN

(South approach slab shown; North approach slab similar by 180° rotation)

TOP AND BOTTOM ELEVATIONS FOR APPROACH FOOTING

North Approach			South Approach		
Point/ Location	Top	Bottom	Point/ Location	Top	Bottom
A - SE	363.54	362.71	A - NE	363.54	362.71
B - S ℄	363.89	363.06	B - N ℄	363.89	363.06
C - S SCL	363.85	363.01	C - N SCL	363.85	363.01
D - SW	363.54	362.71	D - NW	363.54	362.71
E - NE	363.54	362.71	E - SE	363.54	362.71
F - N ℄	363.89	363.06	F - S ℄	363.89	363.06
G - N SCL	363.85	363.01	G - S SCL	363.85	363.01
H - NW	363.54	362.71	H - SW	363.54	362.71

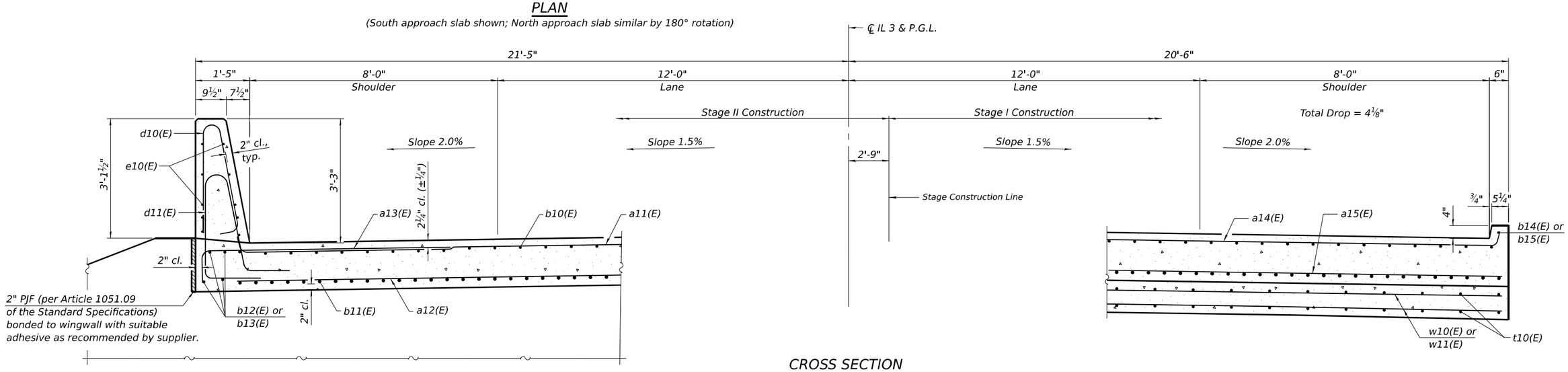

NEAR ABUTMENT

CROSS SECTION

(Looking South)

AT APPROACH FOOTING

BAIA-CIP-39CS-L(>30°) 4-4-2025

(Sheet 1 of 2)

QUIGG ENGINEERING INC
DESIGN FIRM REG. NO. 184.004721-0014

USER NAME = SCaro	DESIGNED - DAP	REVISED -	
0390083-78967-014-Appr. Slab Details.dgn	CHECKED - RPW	REVISED -	
PLOT SCALE = $SCALE$	DRAWN - ASC	REVISED -	
PLOT DATE =	CHECKED - MDC	REVISED -	

STATE OF ILLINOIS
DEPARTMENT OF TRANSPORTATION

APPROACH SLAB DETAILS
STRUCTURE NO. 039-0083

SHEET 14 OF 31 SHEETS

F.A.P RTE.	SECTION	COUNTY	TOTAL SHEETS	SHEET NO.
312	130B-1	JACKSON	83	43
		CONTRACT NO. 78967		
	ILLINOIS	FED. AID PROJECT		

MODEL: Default
FILE NAME: S:\2021\21IL033 - PTB 199-38 D9 - QEI - Various HIWC-12 & 20 - IL-3 BR Replace 039-0026 PH1-2\CADD\CADD Sheets\0390083-78967-014-Appr. Slab Details.dgn
12/2/2025 3:47:47 PM

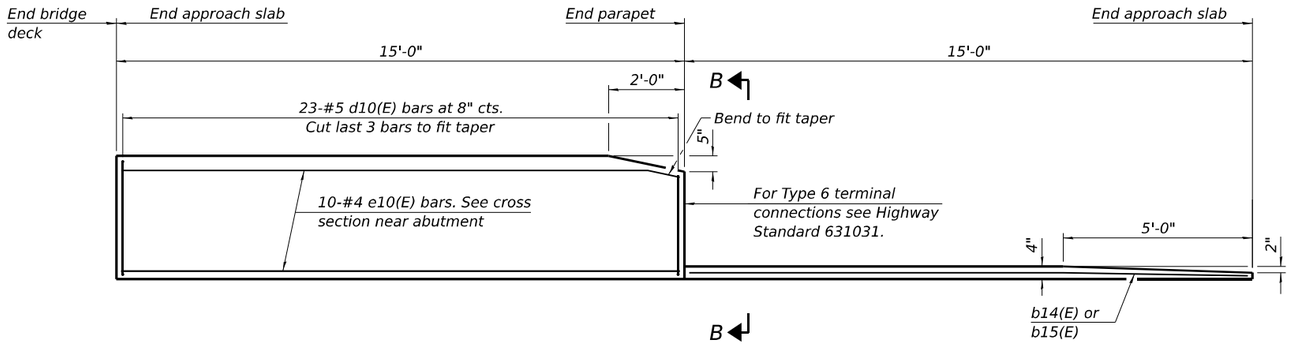

INSIDE ELEVATION OF PARAPET AND CURB

Notes:

The joint opening shall be adjusted for temperature per Article 520.04 of the Standard Specifications. However, since this detail is for jointless structures, the length of bridge used to calculate the adjustment shall be equal to half the total bridge length plus the length of the bridge approach slab.

Parapet concrete shall be paid for as Concrete Superstructure.

Approach slab shall be paid for as Concrete Superstructure (Approach Slab).

Approach footing concrete shall be paid for as Concrete Structures.

The approach footing maximum applied service bearing pressure (Qmax) = 2.0 ksf.

Cost of excavation for approach footing included with Concrete Structures.

For Granular Backfill for Structures and drainage treatment details, see sheet 2 of 31.

For bar splicer details, see sheet 24 of 31.

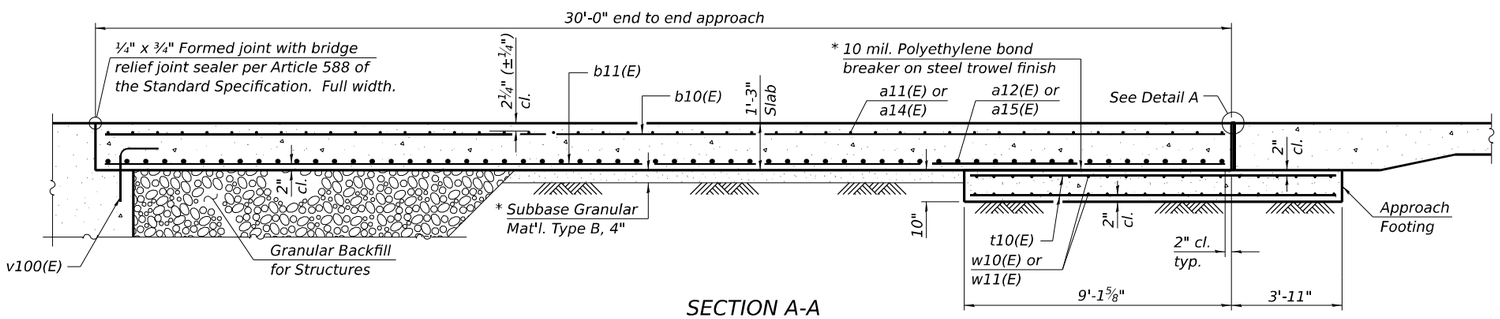

SECTION A-A

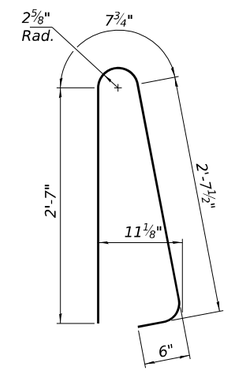

BAR d10(E)

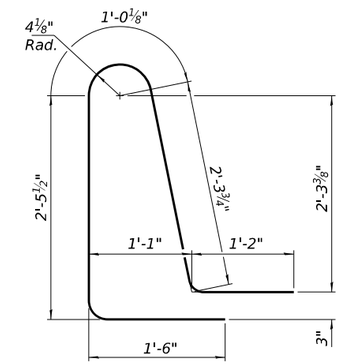

BAR d11(E)

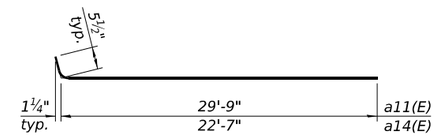

BARS a11(E) and a14(E)

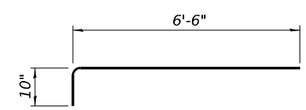

BAR a13(E)

TWO APPROACHES
BILL OF MATERIAL

Bar	No.	Size	Length	Shape
a11(E)	70	#5	30'-3"	
a12(E)	92	#8	29'-10"	
a13(E)	32	#5	7'-4"	
a14(E)	70	#5	23'-1"	
a15(E)	92	#8	22'-8"	
b10(E)	62	#5	29'-8"	
b11(E)	99	#9	29'-8"	
b12(E)	8	#5	15'-1"	
b13(E)	8	#5	14'-6"	
b14(E)	2	#4	14'-2"	
b15(E)	2	#4	14'-8"	
d10(E)	92	#5	6'-5"	
d11(E)	92	#5	8'-6"	
e10(E)	40	#4	14'-8"	
t10(E)	172	#4	12'-7"	
w10(E)	40	#5	29'-11"	
w11(E)	40	#5	22'-8"	
Concrete Superstructure			Cu. Yd.	7.8
Concrete Superstructure (Approach Slab)			Cu. Yd.	117.0
Concrete Structures			Cu. Yd.	33.1
Reinforcement Bars, Epoxy Coated			Pound	34,690

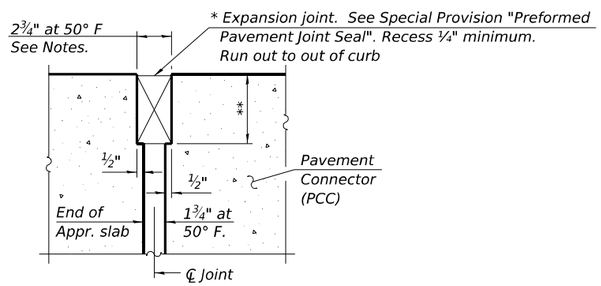

DETAIL A
(at Rt. ∠'s)

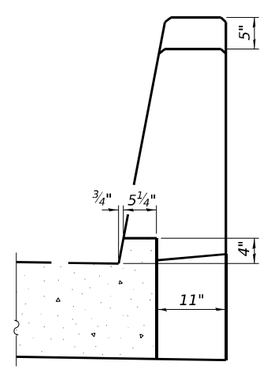

VIEW B-B

* Cost included with Concrete Superstructure (Approach Slab).

** Per manufacturer recommendations

(Sheet 2 of 2)

MODEL: Default
FILE NAME: S:\2021\21ILI033 - PTB 199-38 D9 - QEI - Various HIWC-12 & 20 - IL-3 BR Replace 039-0026 PH1-2\CADD\CADD Sheets\0390083-78967-015-Appr. Slab Details.dgn
12/2/2025 3:47:48 PM

QUIGG ENGINEERING INC
DESIGN FIRM REG. NO. 184.004721-0014

USER NAME = SCaro	DESIGNED - DAP	REVISED -	
0390083-78967-015-Appr. Slab Details.dgn	CHECKED - RPW	REVISED -	
PLOT SCALE = $SCALE$	DRAWN - ASC	REVISED -	
PLOT DATE =	CHECKED - MDC	REVISED -	

STATE OF ILLINOIS
DEPARTMENT OF TRANSPORTATION

APPROACH SLAB DETAILS
STRUCTURE NO. 039-0083

SHEET 15 OF 31 SHEETS

F.A.P RTE.	SECTION	COUNTY	TOTAL SHEETS	SHEET NO.
312	130B-1	JACKSON	83	44
		CONTRACT NO. 78967		
	ILLINOIS	FED. AID PROJECT		

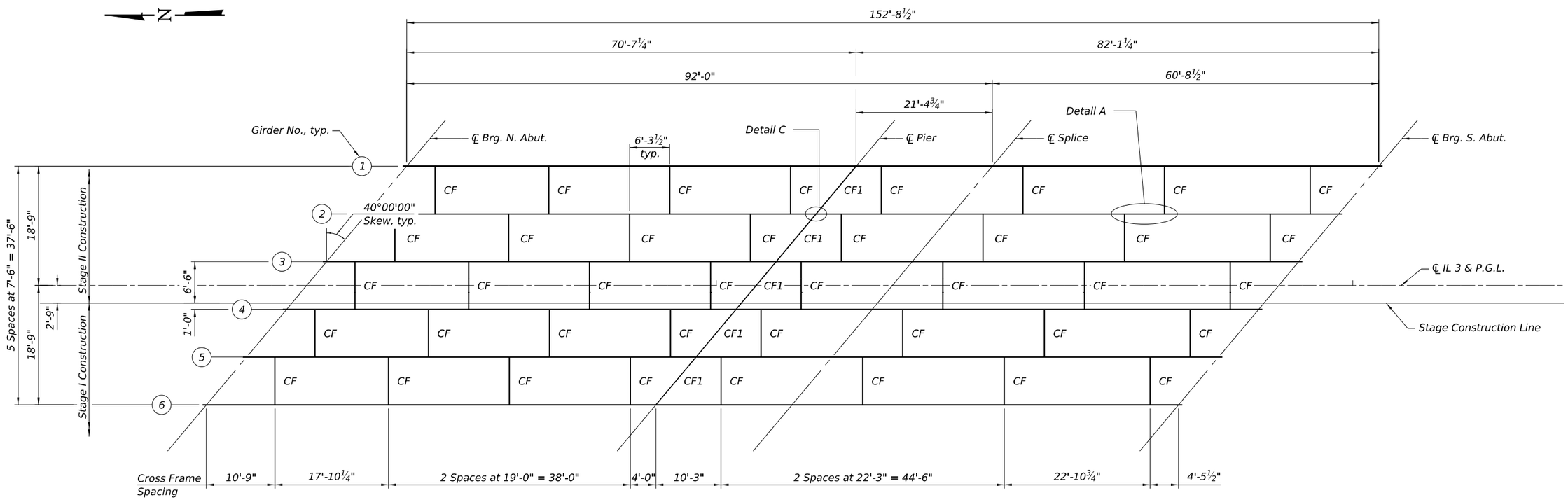

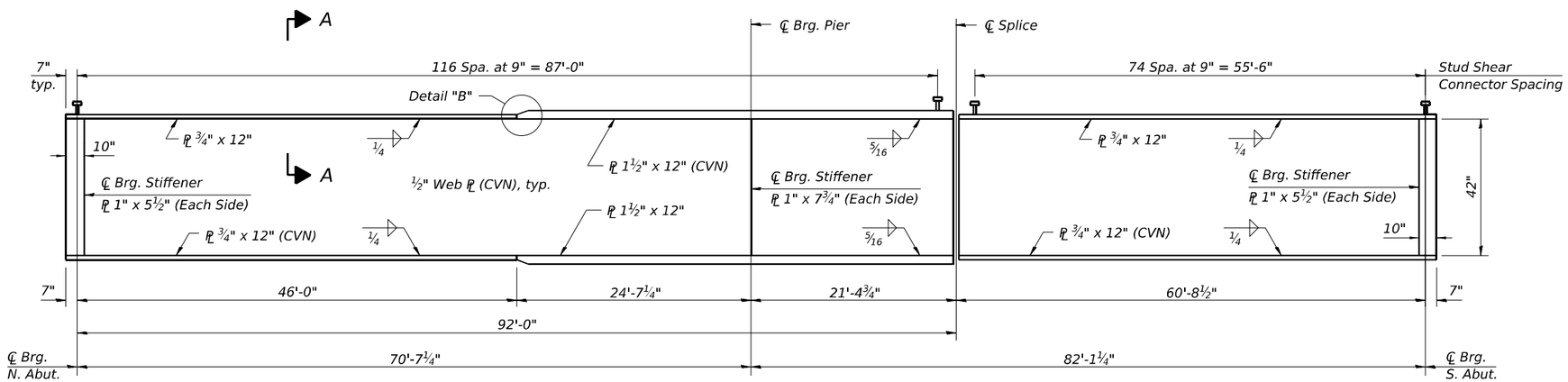

GIRDER ELEVATION

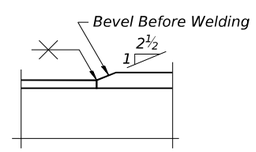

DETAIL "B"

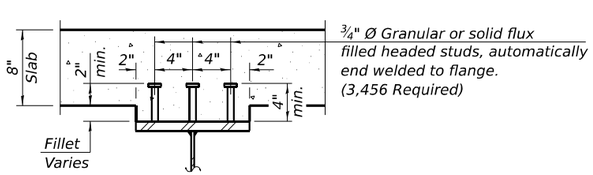

SECTION A-A

TOP OF WEB ELEVATION

(For Fabrication Only)

Location	Girder 1	Girder 2	Girder 3	Girder 4	Girder 5	Girder 6
℄ Brg. N. Abut.	364.00	364.15	364.26	364.26	364.15	364.00
℄ Brg. Pier	363.88	364.03	364.14	364.14	364.03	363.88
Field Splice	363.84	363.99	364.10	364.10	364.99	363.84
℄ Brg. S. Abut.	364.00	364.15	364.26	364.26	364.15	364.00

Notes:

For cross frame details, field splice details, and Detail A and C see sheet 17 of 31.

All girders, bearing stiffeners, and splice plates, including filler plates, shall be AASHTO M270 Grade 50.

All cross frames shall be installed as steel is erected and secured with erection pins and bolts except as otherwise noted. Individual cross frames at supports may be temporarily disconnected to install bearing anchor bolts.

Girders shall be braced for stability during erection and remain braced until deck is poured and cured.

Load carrying components designated "CVN" shall conform to the Charpy-V-Notch Impact Energy Requirements, Zone 2.

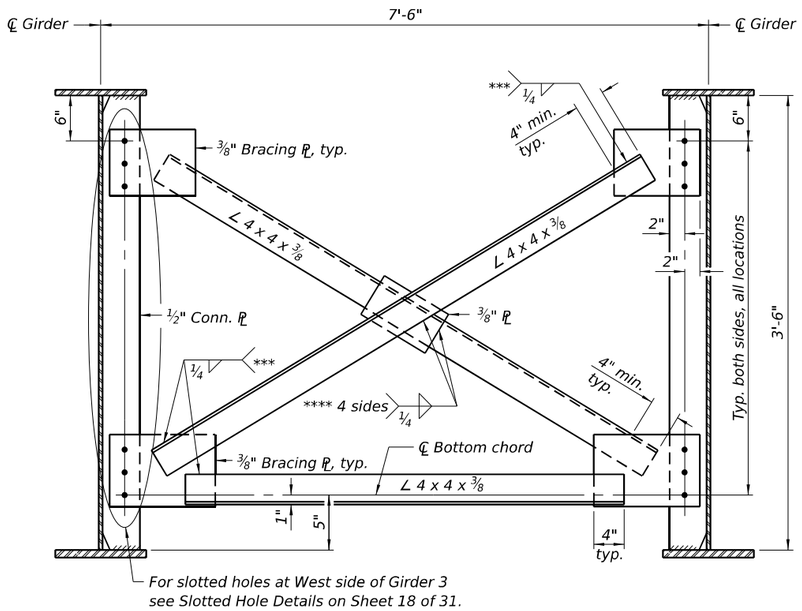

INTERIOR CROSS-FRAME (CF)

(40 Required)

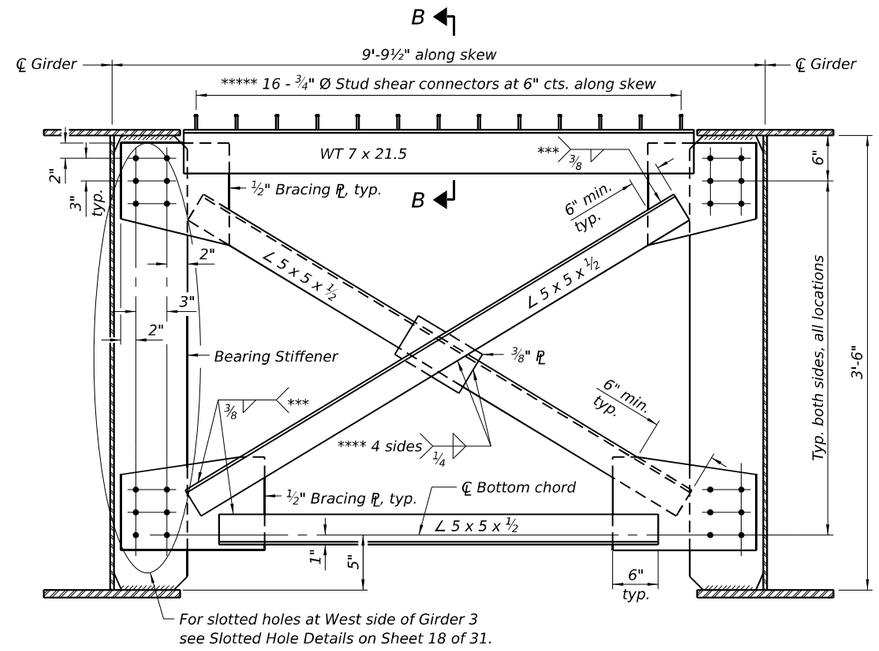

INTERIOR CROSS-FRAME (CF1)

(5 Required)

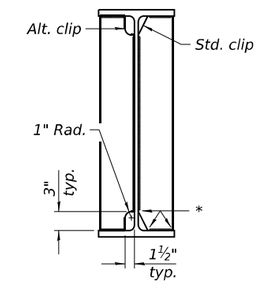

WELD LIMITS AND CLIP DETAILS

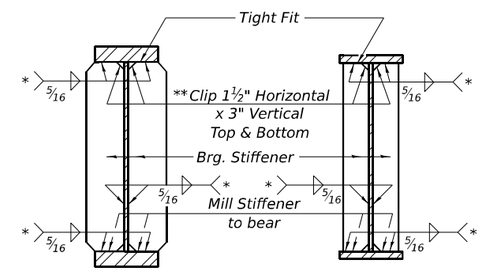

SECTION AT PIER

SECTION AT ABUTMENT

* Stop welds 1/4" (±1/8") from edges as shown, typ.
** Clip may be rounded for ease of shop painting.
*** Fillet weld angles along 3 sides on one face of gusset plate; however, if cross-frames are galvanized, weld all-around.
**** If cross-frames are galvanized, weld all-around.
***** At the Stage Construction Line, omit the stud shear connectors in the Stage I deck. 15 stud shear connectors are required in the Stage II deck.

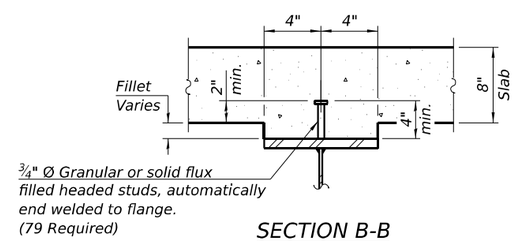

SECTION B-B

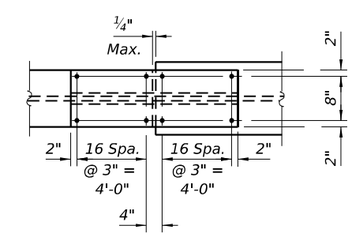

PLAN - TOP AND BOTTOM FLANGE

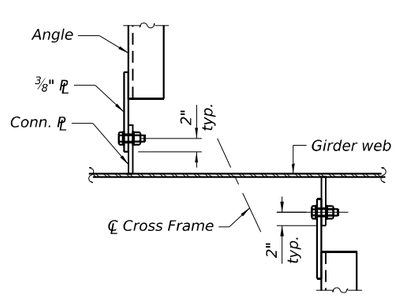

DETAIL A

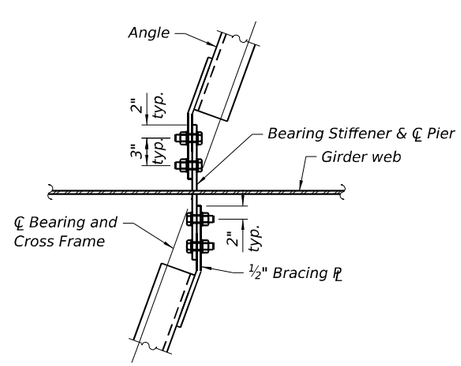

DETAIL C

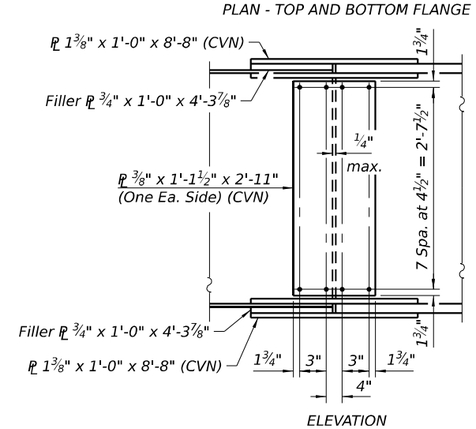

ELEVATION

FIELD SPLICE DETAIL

Notes:

Detail 15/16" Ø holes for all 7/8" Ø H.S. bolts for Field Splices.

Detail 15/16" Ø holes for all 3/4" Ø H.S. bolts for Interior Cross-Frames, except as noted. 13/16" x 2" vertical slotted holes shall be provided at bracing plates on the south side of Girder 4 to accommodate the differential deflection between Girder 3 and 4 due to stage construction. The bolts in slotted holes shall be finger tightened until the second stage pour is completed. Position slots so bolts move from one end with no concrete load to the opposite end under the deck load. The holes shall be positioned to allow maximum bolt displacement without laterally stressing the girders. See Slotted Hole Detail on Sheet 18 of 31.

Two hardened washers required for each set of oversized holes at the Interior Cross-Frames.

See Sheets 16 of 31 for Detail A and C location and additional details.

All girders, bearing stiffeners, and splice plates, including filler plates, shall be AASHTO M270 Grade 50.

Load carrying components designated "CVN" shall conform to the Charpy-V-Notch Impact Energy Requirements, Zone 2.

INTERIOR GIRDER MOMENT TABLE				
		0.4 Sp. 1	Pier	0.6 Sp. 2
I_s	(in^4)	11,312	20,124	11,312
I_c (n)	(in^4)	32,618	49,016	32,618
I_c (3n)	(in^4)	24,764	———	24,764
I_c (cr)	(in^4)	———	25,518	———
S_s	(in^3)	520	894	520
S_c (n)	(in^3)	790	———	790
S_c (3n)	(in^3)	723	———	723
S_c (cr)	(in^3)	———	986	———
S_x	(in^3)	749	961	715
DC1	(k/')	0.931	0.993	0.931
M_{DC1}	('k)	235	823	429
DC2	(k/')	0.175	0.175	0.175
M_{DC2}	('k)	46	146	83
DW	(k/')	0.375	0.375	0.375
M_{DW}	('k)	99	313	178
LLDF		0.608	0.621	0.584
$M_{Ł+IM}$	('k)	828	1,114	935
$f_ł$ (Strength I)	(ksi)	0.0	0.0	0.0
$M_u + \frac{1}{3} f_ł S_x$	('k)	1,949	3,630	2,543
$\Phi_f M_n$	('k)	4,055	———	3,872
f_s DC1	(ksi)	5.4	11.0	9.9
f_s DC2	(ksi)	0.8	1.8	1.4
f_s DW	(ksi)	1.6	3.8	3.0
f_s (Ł+IM)	(ksi)	12.6	13.6	14.2
$f_ł$ (Service II)	(ksi)	0.0	0.0	0.0
$f_s + {}^{f_ł}/_2$ (Service II)	(ksi)	24.2	34.2	32.7
Service II Resistance	(ksi)	47.5	47.5	47.5
$f_s + {}^{f_ł}/_3$ (Strength I)	(ksi)	———	45.5	———
$\Phi_f F_n$	(ksi)	———	50.0	———
V_f	(k)	33.6	———	32.8

INTERIOR GIRDER REACTION TABLE				
		North Abut.	Pier	South Abut.
LLDF		0.926	0.779	0.933
OCF		1.168	———	1.168
R_{DC1}	(k)	22.4	95.2	29.3
R_{DC2}	(k)	4.1	17.6	5.4
R_{DW}	(k)	8.8	36.9	11.6
$R_Ł$	(k)	74.1	113.6	77.9
R_{Im}	(k)	18.4	22.9	18.9
R_{Total} (Strength I)(Impact)	(k)	208.2	434.7	230.2
R_{Total} (Strength I)(No Impact)	(k)	176.0	394.7	197.1

I_s , S_s : Non-composite moment of inertia and section modulus of the steel section used for computing f_s (Total-Strength I, and Service II) due to non-composite dead loads (in.⁴ and in.³).

I_c (n), S_c (n): Composite moment of inertia and section modulus of the steel and deck based upon the modular ratio, "n", used for computing f_s (Total-Strength I, and Service II) in uncracked sections due to short-term composite live loads (in.⁴ and in.³).

I_c (3n), S_c (3n): Composite moment of inertia and section modulus of the steel and deck based upon 3 times the modular ratio, "3n", used for computing f_s (Total-Strength I, and Service II) in uncracked sections, due to long-term composite (superimposed) dead loads (in.⁴ and in.³).

I_c (cr), S_c (cr): Composite moment of inertia and section modulus of the steel and longitudinal deck reinforcement, used for computing f_s (Total-Strength I and Service II) in cracked sections, due to both short-term composite live loads and long-term composite (superimposed) dead loads (in.⁴ and in.³).

S_x : Section modulus about the major axis of a section to the controlling flange, tension or compression, taken as yield moment with respect to the controlling flange over the yield strength of the controlling flange (in.³).

DC1: Un-factored non-composite dead load (kips/ft.).

M_{DC1}: Un-factored moment due to non-composite dead load (kip-ft.).

DC2: Un-factored long-term composite (superimposed excluding future wearing surface) dead load (kips/ft.).

M_{DC2}: Un-factored moment due to long-term composite (superimposed excluding future wearing surface) dead load (kip-ft.).

DW: Un-factored long-term composite (superimposed future wearing surface only) dead load (kips/ft.).

M_{DW} : Un-factored moment due to long-term composite (superimposed future wearing surface only) dead load (kip-ft.).

LLDF: Live Load Distribution Factor for moment and shear computed according to Article 4.6.2.2 and further IDOT provisions.

$M_{Ł+IM}$: Un-factored live load moment plus dynamic load allowance (impact) (kip-ft.).

M_u : Strength I load combination of factored design moments (kip-ft.).
$1.25\ (M_{DC1} + M_{DC2}) + 1.5\ M_{DW} + 1.75\ M_{Ł+IM}$

$f_ł$: Factored calculated flange lateral bending stress as calculated using Article 6.10.1.6 and as further simplified by IDOT provisions (ksi).

$\Phi_f M_n$: Factored nominal flexural resistance of the section determined as specified in Article 6.10.7.1 or A6 as applicable (kip-ft.).

f_s DC1: Un-factored stress at edge of flange for controlling steel flange due to vertical non-composite dead loads as calculated below (ksi).
M_{DC1} / S_s

f_s DC2: Un-factored stress at edge of flange for controlling steel flange due to vertical composite dead loads as calculated below (ksi).
M_{DC2} / S_c (3n) or M_{DC2} / S_c (cr) as applicable.

f_s DW: Un-factored stress at edge of flange for controlling steel flange due to vertical composite future wearing surface loads as calculated below (ksi).
M_{DW} / S_c (3n) or M_{DW} / S_c (cr) as applicable.

f_s (Ł+ IM): Un-factored stress at edge of flange for controlling steel flange due to vertical composite live load plus impact loads as calculated below (ksi).
$M_{Ł+IM} / S_c$ (n) or $M_{Ł+IM} / S_c$ (cr) as applicable.

$f_s + f_ł / 2$ (Service II): Sum of stresses as computed below (ksi).
f_s DC1 + f_s DC2 + f_s DW + 1.3 f_s (Ł+ IM) + $f_ł$ /2

Service II Resistance: Composite ($0.95R_hF_{yf}$) or noncomposite ($0.80R_hF_{yf}$) stress capacity according to Article 6.10.4.2 (ksi).

$f_s + f_ł / 3$ (Strength I): Sum of stresses as computed below on non-compact sections (ksi).
1.25 (f_s DC1 + f_s DC2) + 1.5 f_s DW + 1.75 f_s (Ł+ IM) + $f_ł$ /3

$\Phi_f F_n$: Factored nominal flexural resistance of the section as specified in Article 6.10.7.2 or 6.10.8 as applicable (ksi).

V_f: Maximum factored shear range in span computed according to Article 6.10.10.

OCF: Obtuse Correction Factor according to Article 4.6.2.2.3c or as further simplified by IDOT provisions.

R_{DC1}: Un-factored reaction due to non-composite dead load (kip).

R_{DC2}: Un-factored reaction due to long-term composite (superimposed excluding future wearing surface) dead load (kip).

R_{DW} : Un-factored reaction due to long-term composite (superimposed future wearing surface only) dead load (kip).

$R_Ł$: Un-factored live load reaction (kip).

R_{IM} : Un-factored dynamic load allowance (impact) (kip).

R_{Total} (Strength I)(Impact): Strength I load combination of factored design reactions (kip).
$1.25\ (R_{DC1} + R_{DC2}) + 1.5R_{DW} + 1.75\ (R_Ł + R_{IM})$

R_{Total} (Strength I)(No Impact): Strength I load combination of factored design reactions, not including dynamic load allowance (Impact) (kip).
$1.25\ (R_{DC1} + R_{DC2}) + 1.5R_{DW} + 1.75\ (R_Ł)$

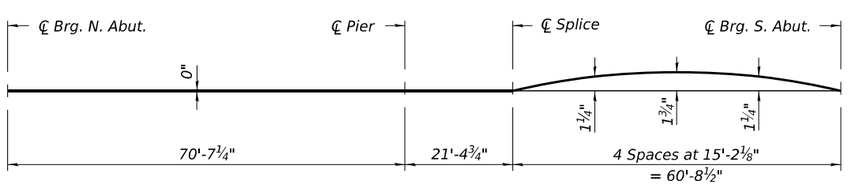

CAMBER DIAGRAM

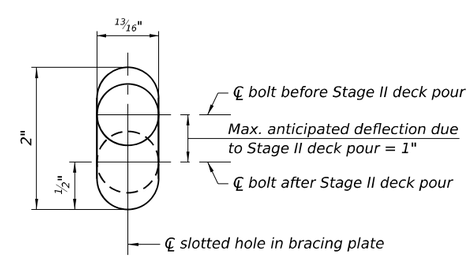

SLOTTED HOLE DETAIL

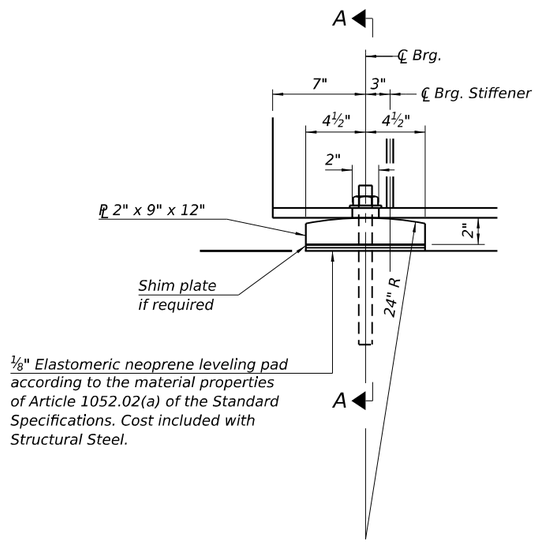

ELEVATION AT ABUT.

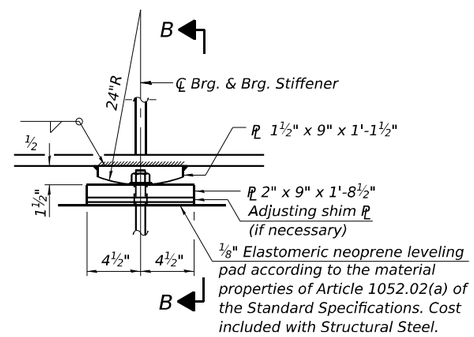

ELEVATION AT PIER

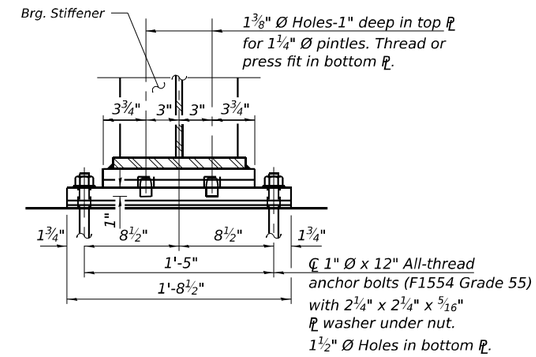

SECTION B-B

FIXED BEARING AT PIER

(6 Required)

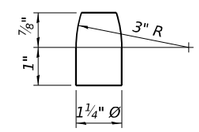

PINTLE

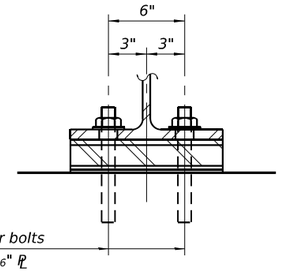

℄ 1" Ø x 12" All-thread anchor bolts
(Grade 55) with 2¼"x 2¼"x 5/16" PL
washers under nuts. 1⅜"x 2" slotted
holes in flange. 1½" Ø Holes in bearing plate.

SECTION A-A

FIXED BEARING AT ABUTMENTS

(12 Required)

Notes:

Anchor bolts at all supports shall be installed as each member is erected unless an equivalent temporary means of lateral restraint is used.

The structural steel plates and pintles of the Bearing Assembly shall conform to the requirements of AASHTO M270 Grade 50.

Two ⅛ in. adjusting shims shall be provided for each bearing in addition to all other plates or shims and placed as shown on bearing details.

At fixed bearings all bearing plates and pintles shall be metalized. See special provision for "Metallizing of Structural Steel."

All anchor bolts, nuts, and washers shall be galvanized according to AASHTO M111 or M232 as applicable.

The anchor bolt sizes and grades shown constitute a calculated seismic structural fuse. Substitution of higher diameter and/or grade anchor bolts will not be allowed.

BILL OF MATERIAL

Item	Unit	Total
Anchor Bolts, 1"	Each	36

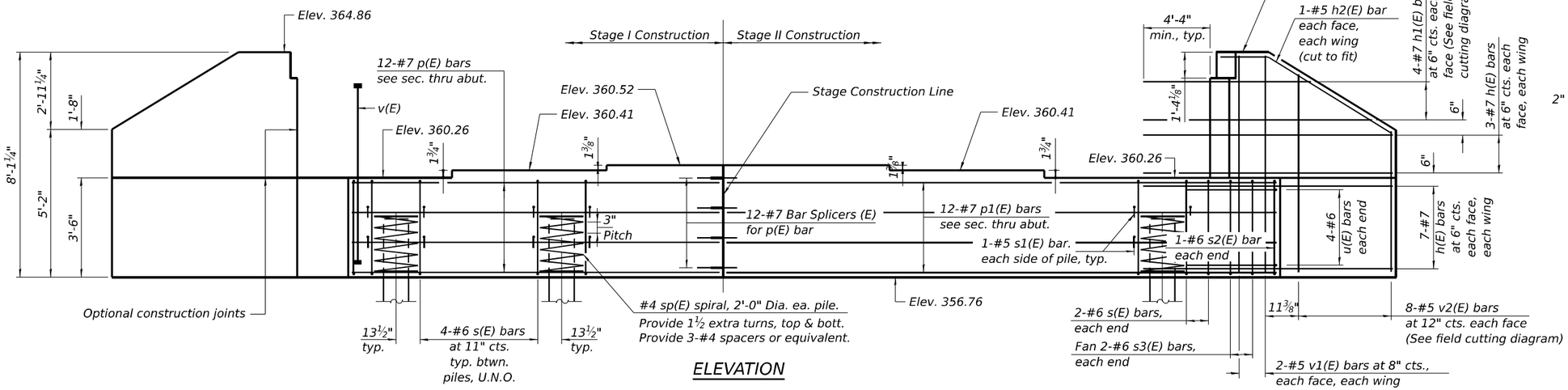

ELEVATION

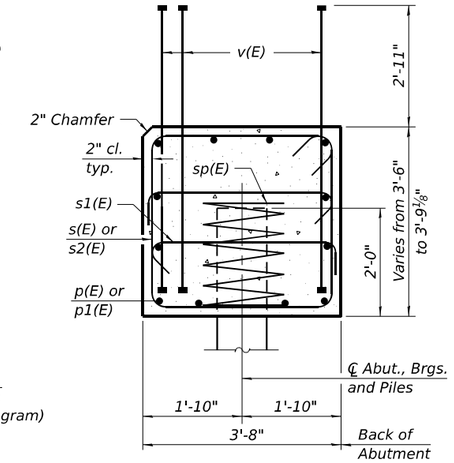

SEC. THRU ABUT.

Dimensions at right angles to abutment.

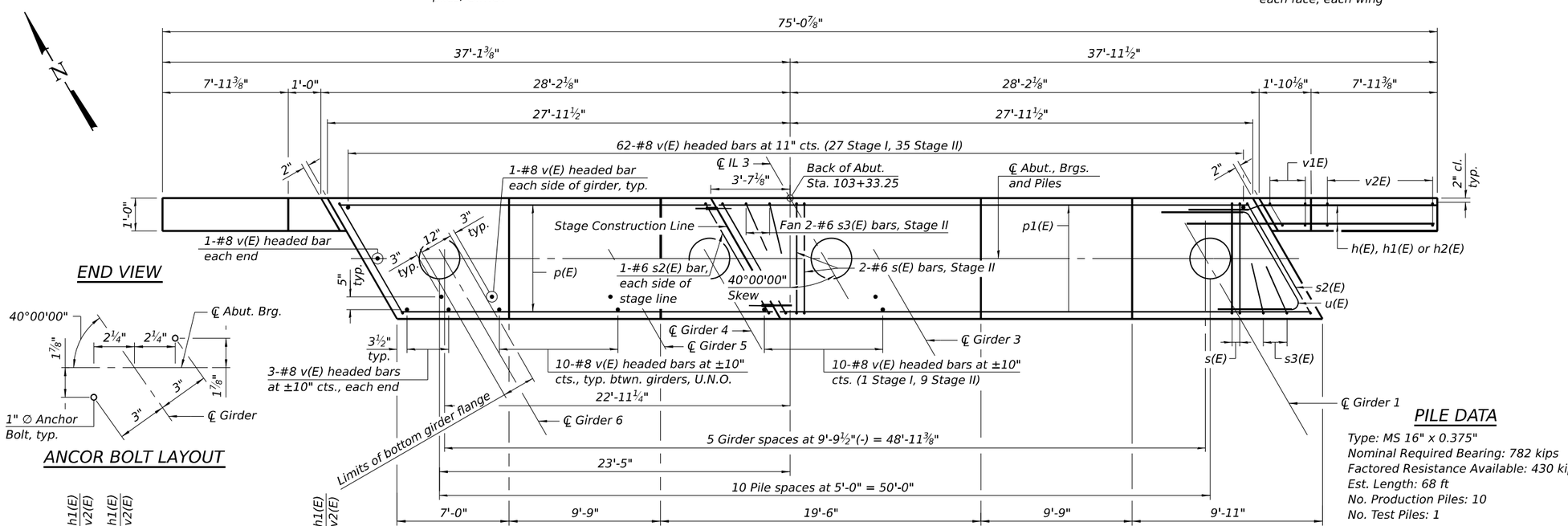

PLAN

END VIEW

ANCOR BOLT LAYOUT

PILE DATA

Type: MS 16" x 0.375"
Nominal Required Bearing: 782 kips
Factored Resistance Available: 430 kips
Est. Length: 68 ft
No. Production Piles: 10
No. Test Piles: 1

BILL OF MATERIAL

Bar	No.	Size	Length	Shape
h(E)	40	#7	14'-2"	
h1(E)	8	#7	23'-7"	
h2(E)	4	#5	9'-10"	
p(E)	12	#7	24'-0"	
p1(E)	12	#7	31'-1"	
s(E)	42	#6	14'-4"	
s1(E)	44	#5	4'-4"	
s2(E)	4	#6	16'-4"	
s3(E)	6	#6	8'-1"	
* sp(E)	11	#4	2'-0"	
u(E)	8	#6	10'-10"	
v(E)	132	#8	6'-3"	
v1(E)	8	#5	7'-9"	
v2(E)	16	#5	12'-3"	
Structure Excavation		Cu. Yd.	280	
Concrete Structures		Cu. Yd.	32.6	
Reinforcement Bars, Epoxy Coated		Pound	7,330	
Furnishing Metal Shell Piles 16" x 0.375"		Foot	680	
Driving Piles		Foot	680	
Test Pile Metal Shells		Each	1	

* Length is height of spiral.

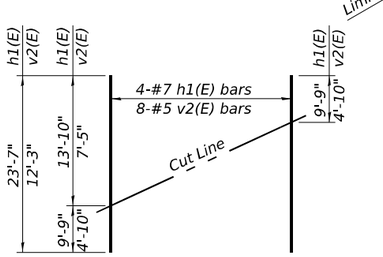

FIELD CUTTING DIAGRAM

Order h1(E) and v2(E) full length. Cut as shown and use remainder of bars in opposite wing.

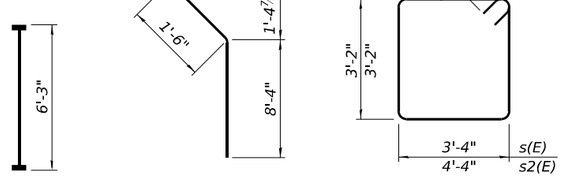

BAR v(E)

(Headed. 264-#8 Bar terminators)

BAR h2(E)

BAR s(E) & s2(E)

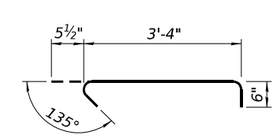

BAR s1(E)

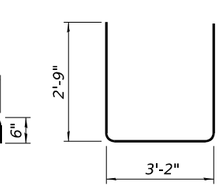

BAR s3(E)

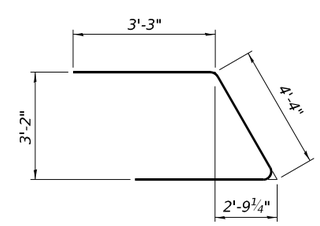

BAR u(E)

Notes:
Pour steps monolithically with cap.
For details of piles see sheet 23 of 31.
Bar terminators, paid for separately.
See Total Bill of Material.
For bar splicer details, see sheet 24 of 31.

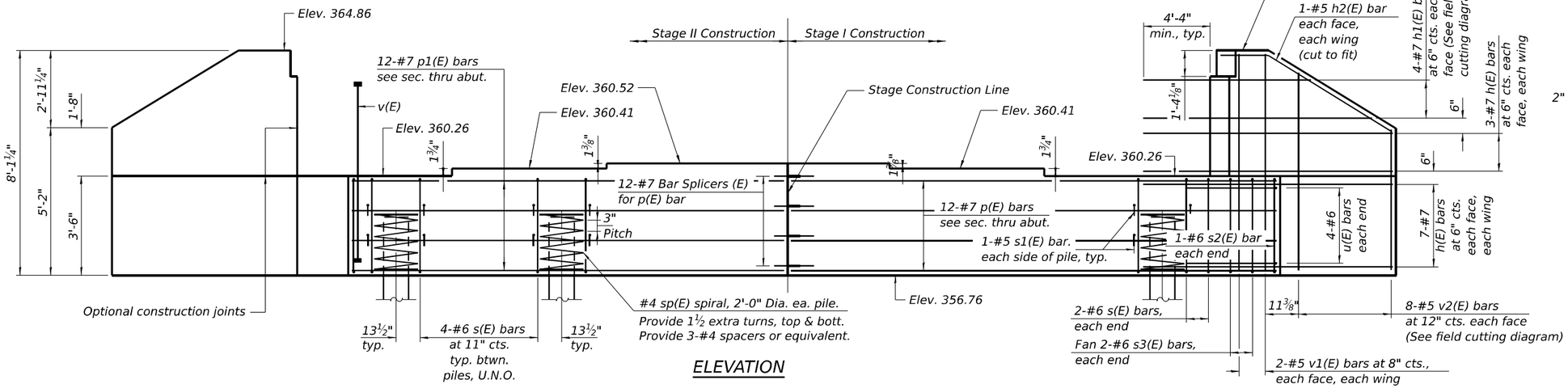

ELEVATION

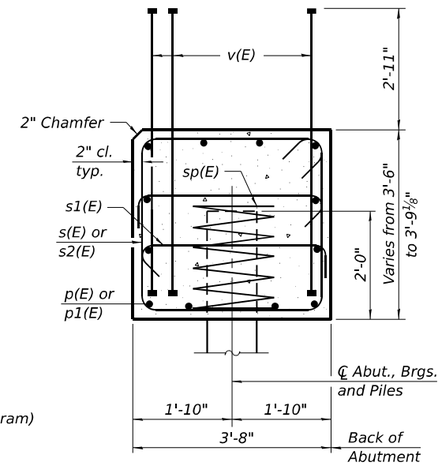

SEC. THRU ABUT.

Dimensions at right angles to abutment.

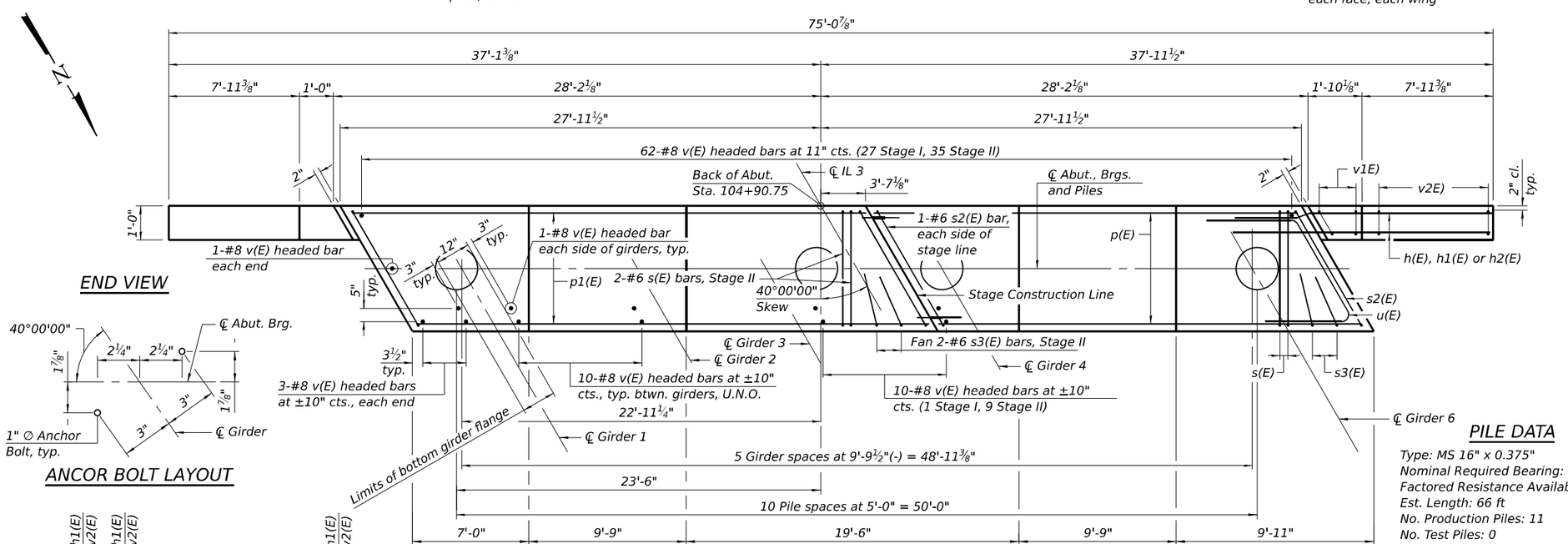

PLAN

END VIEW

ANCOR BOLT LAYOUT

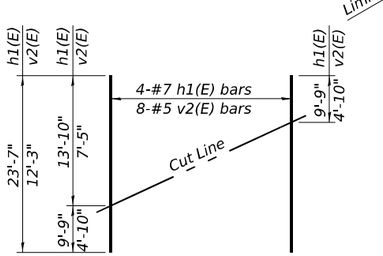

FIELD CUTTING DIAGRAM

Order h1(E) and v2(E) full length. Cut as shown and use remainder of bars in opposite wing.

BAR v(E)

(Headed. 264-#8 Bar terminators)

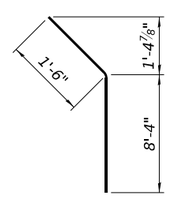

BAR h2(E)

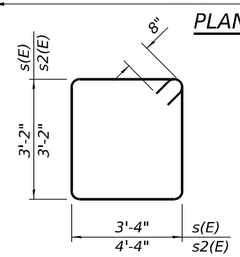

BAR s(E) & s2(E)

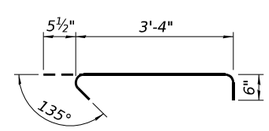

BAR s1(E)

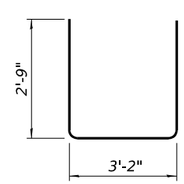

BAR s3(E)

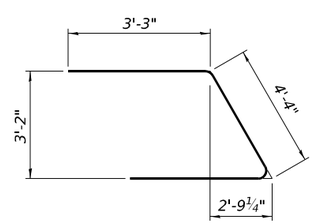

BAR u(E)

PILE DATA

Type: MS 16" x 0.375"
Nominal Required Bearing: 782 kips
Factored Resistance Available: 430 kips
Est. Length: 66 ft
No. Production Piles: 11
No. Test Piles: 0

BILL OF MATERIAL

Bar	No.	Size	Length	Shape
h(E)	40	#7	14'-2"	
h1(E)	8	#7	23'-7"	
h2(E)	4	#5	9'-10"	
p(E)	12	#7	24'-0"	
p1(E)	12	#7	31'-1"	
s(E)	42	#6	14'-4"	
s1(E)	44	#5	4'-4"	
s2(E)	4	#6	16'-4"	
s3(E)	6	#6	8'-1"	
* sp(E)	11	#4	2'-0"	
u(E)	8	#6	10'-10"	
v(E)	132	#8	6'-3"	
v1(E)	8	#5	7'-9"	
v2(E)	16	#5	12'-3"	
Structure Excavation		Cu. Yd.	280	
Concrete Structures		Cu. Yd.	32.6	
Reinforcement Bars, Epoxy Coated		Pound	7,330	
Furnishing Metal Shell Piles 16" x 0.375"		Foot	726	
Driving Piles		Foot	726	

* Length is height of spiral.

Notes:
Pour steps monolithically with cap.
For details of piles see sheet 23 of 31.
Bar terminators, paid for separately.
See Total Bill of Material.
For bar splicer details, see sheet 24 of 31.

Notes:
Space reinforcement in cap to miss anchor bolts.
Pour steps monolithically with cap.
For details of piles, see sheet 23 of 31.
For bar splicer details, see sheet 24 of 31.

PILE DATA

Type: MS 16" x 0.375"
Nominal Required Bearing: 782 kips
Factored Resistance Available: 430 kips
Est. Length: 77 ft.
No. Production Piles: 10
No. Test Piles: 1

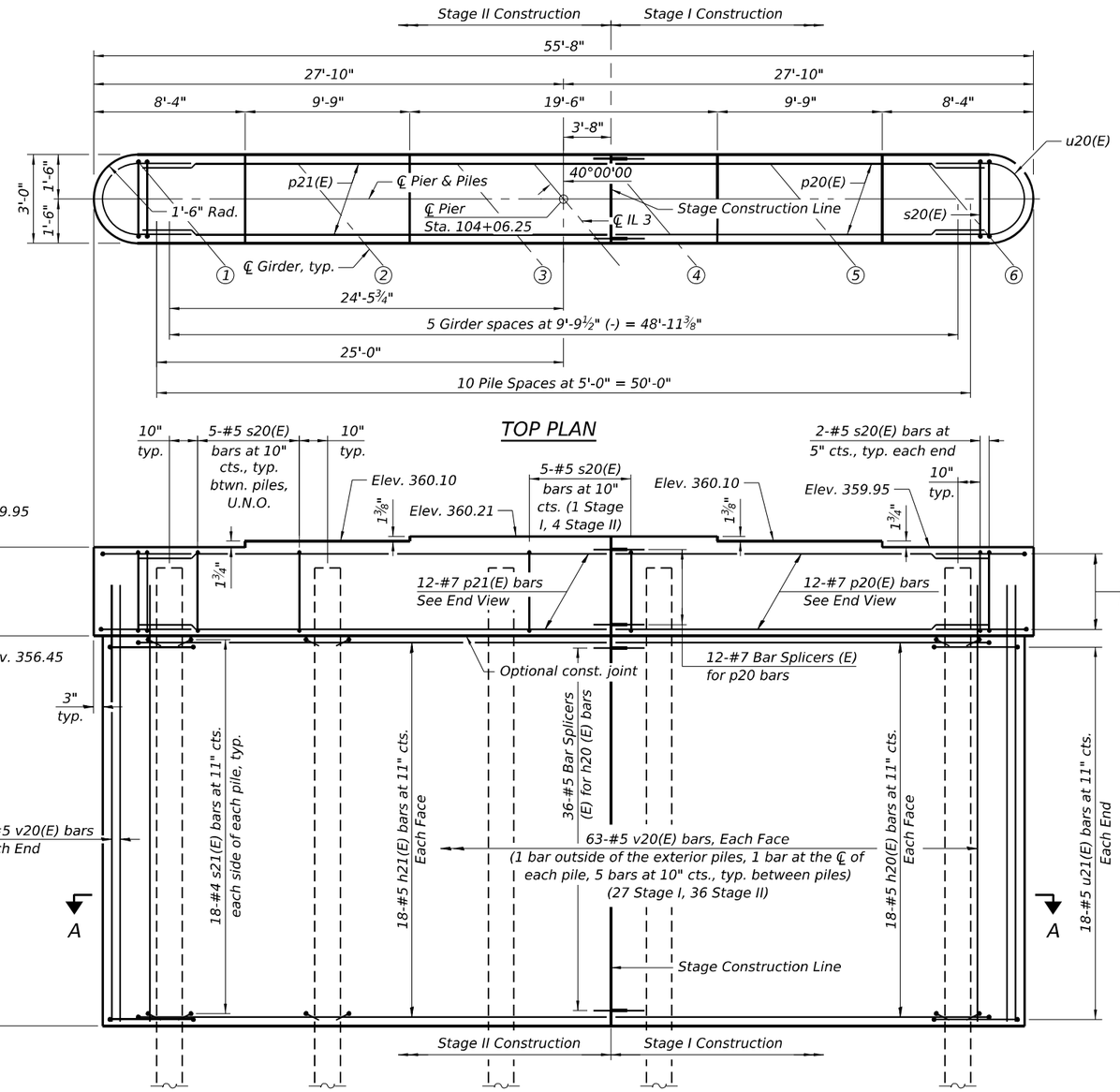

ELEVATION
(Looking South)

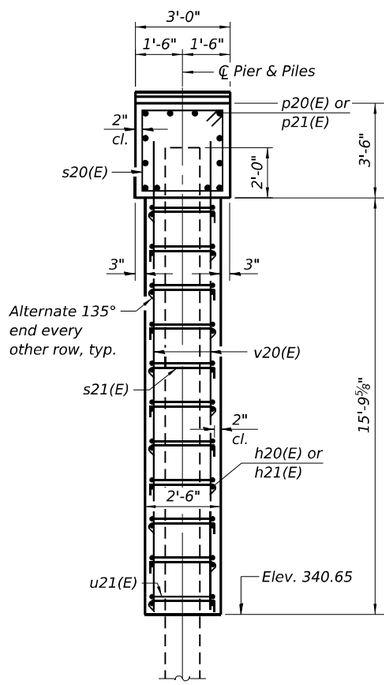

END VIEW

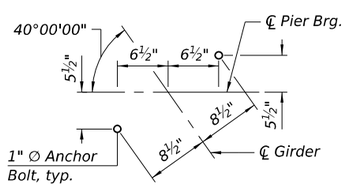

ANCOR BOLT LAYOUT

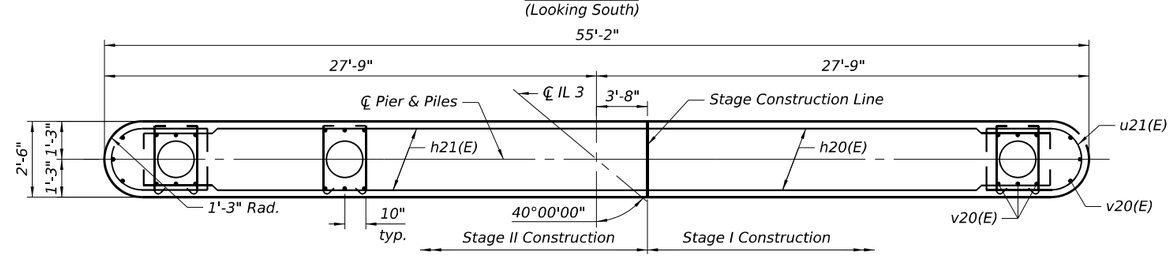

SECTION A-A

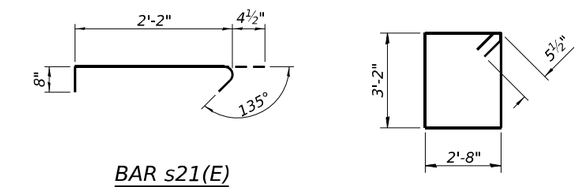

BAR s21(E)

BAR s20(E)

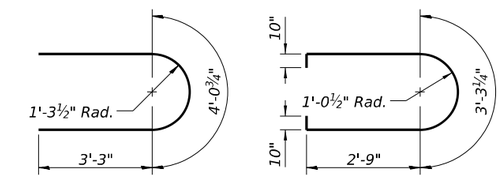

BAR u20(E)

BAR u21(E)

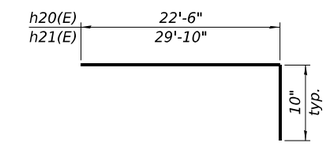

BARS h20(E) and h21(E)

BILL OF MATERIAL

Bar	No.	Size	Length	Shape
h20(E)	36	#5	23'-4"	
h21(E)	36	#5	30'-8"	
p20(E)	12	#7	22'-6"	
p21(E)	12	#7	29'-10"	
s20(E)	54	#5	12'-7"	
s21(E)	396	#4	3'-3"	
u20(E)	12	#6	10'-7"	
u21(E)	36	#5	10'-6"	
v20(E)	126	#5	18'-0"	
Concrete Structures			Cu. Yd.	91.4
Reinforcement Bars, Epoxy Coated			Pound	7,840
Furnishing Metal Shell Piles 16" x 0.375"			Foot	770
Driving Piles			Foot	770
Test Pile Metal Shells			Each	1
Cofferdam Excavation			Cu. Yd.	136
Seal Coat Concrete			Cu. Yd.	73.7

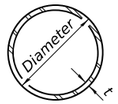

METAL SHELL PILE TABLE

Designation and outside diameter	Wall thickness t	Weight per foot (Lbs./ft.)	Inside volume (yd.³/ft.)
PP12	0.250"	31.40	0.0267
PP14	0.250"	36.75	0.0368
PP14	0.312"	45.65	0.0361
PP16	0.312"	52.32	0.0478
PP16	0.375"	62.64	0.0470

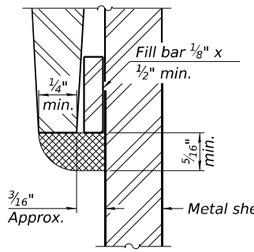

DETAIL A

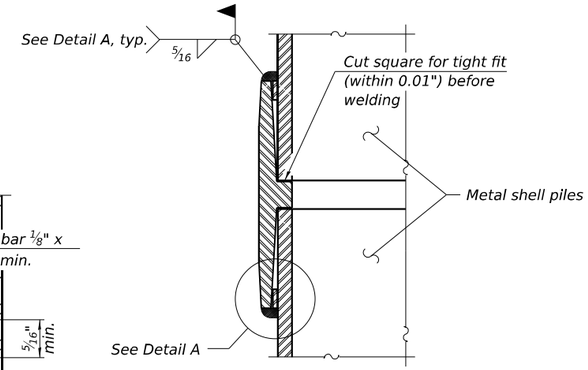

WELDED COMMERCIAL SPLICE

Notes:
The 1/8" x 1/2" min. fill bar may be constructed of 2 bars with a 1/8" max. gap between them.
Pile segments shall be driven to solid contact with splicer before welding.

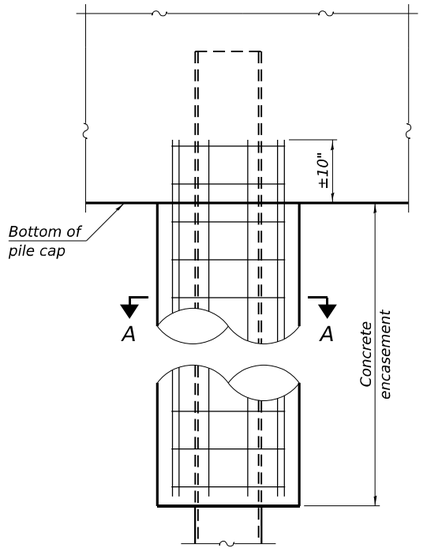

ELEVATION

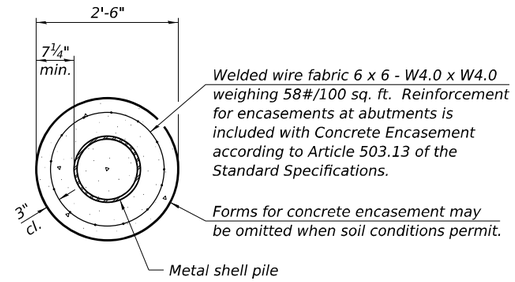

SECTION A-A

INDIVIDUAL PILE CONCRETE ENCASEMENT

(When specified)

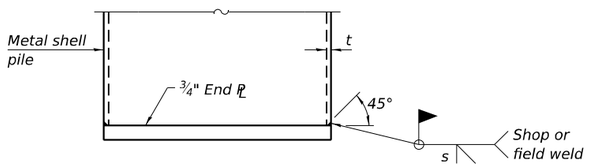

$s = t - \frac{1}{8}$"

END PLATE ATTACHMENT

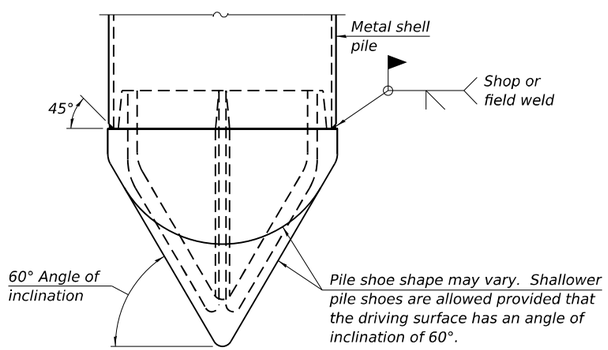

PILE SHOE ATTACHMENT

(When called for on the plans, the Contractor shall furnish metal shell pile shoes consisting of a single piece conical pile point as shown. The pile shoes shall be cast in one piece steel according to either ASTM A 148 Grade 80-50 or AASHTO M 103 Grade 65-35 and shall provide full bearing over the full circumference of the metal shell pile. The pile shoe shall have tapered leads to assure proper alignment and fitting and shall be secured to the pile with a circumferential weld).

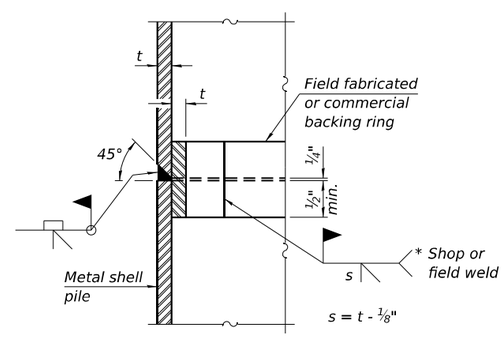

$s = t - \frac{1}{8}$"

COMPLETE PENETRATION WELD SPLICE

* Field fabricated backing ring may be made from pile shell by removing segment to allow reducing circumference and vertically rejoin with partial joint penetration weld.

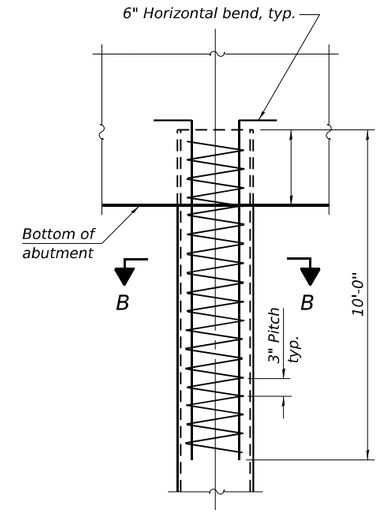

ELEVATION

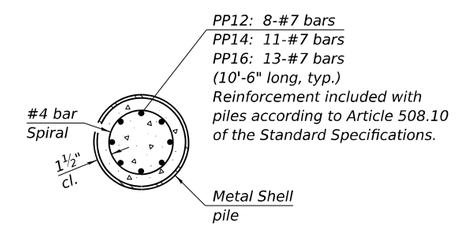

SECTION B-B

REINFORCEMENT AT ABUTMENTS

(Omit when concrete encasement is specified)

Note:
The metal shell piles shall be according to Article 1006.05 of the Standard Specifications.

F-MS 4-4-2025

QUIGG ENGINEERING INC
DESIGN FIRM REG. NO. 184.004721-0014

USER NAME = SCaro	DESIGNED - DAP	REVISED -	
0390083-78967-023-MS Pile Details.dgn	CHECKED - RPW	REVISED -	
PLOT SCALE = $SCALE$	DRAWN - ASC	REVISED -	
PLOT DATE =	CHECKED - MDC	REVISED -	

STATE OF ILLINOIS
DEPARTMENT OF TRANSPORTATION

METAL SHELL PILE DETAILS
STRUCTURE NO. 039-0083

SHEET 23 OF 31 SHEETS

F.A.P RTE.	SECTION	COUNTY	TOTAL SHEETS	SHEET NO.
312	130B-1	JACKSON	83	52

CONTRACT NO. 78967

ILLINOIS FED. AID PROJECT

MODEL: Default
FILE NAME: S:\2021\21IL033 - PTB 199-38 D9 - QEI - Various I-HWO-12 & 20 - IL-3 BR Replace 039-0026 PH1-2\CADD\CADD Sheets\0390083-78967-023-MS Pile Details.dgn
12/2/2025 3:47:58 PM

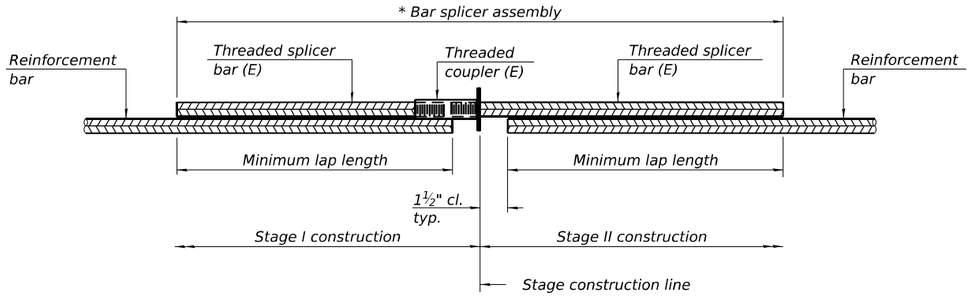

STANDARD BAR SPLICER ASSEMBLY PLAN

Only bar splicer assemblies as presented on the approved QPL list may be used.

Threaded splicer bar length = min. lap length + 1½" + thread length

* Epoxy not required on Bar Splicer Assembly components used in conjunction with black bars.

Location	Bar size	No. assemblies required	Minimum lap length
Deck	#5	530	3'-10"
Diaphragm, m14(E)	#6	10	3'-0"
Appr. Slab	#5	70	2'-6"
Appr. Slab	#8	92	4'-4"
Appr. Footing	#5	80	2'-1"
Abut.	#7	24	4'-1"
Pier	#7	12	4'-1"
Pier	#5	36	2'-9"

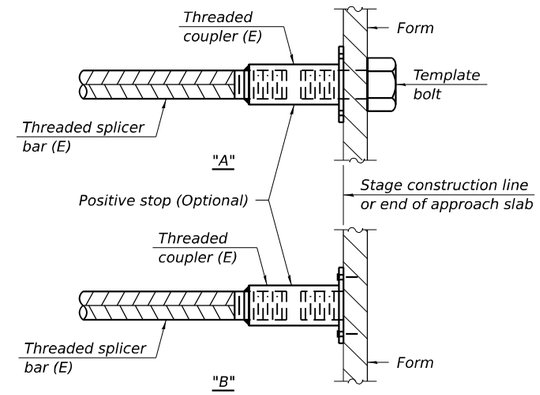

INSTALLATION AND SETTING METHODS

"A" : Set bar splicer assembly by means of a template bolt.
"B" : Set bar splicer assembly by nailing to wood forms or cementing to steel forms.
(E) : Indicates epoxy coating.

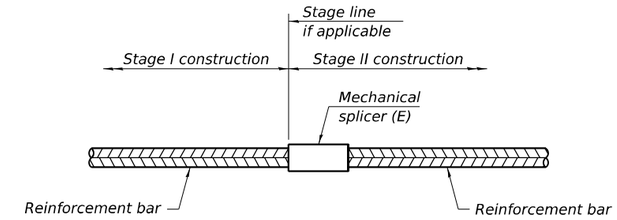

STANDARD MECHANICAL SPLICER

Location	Bar size	No. assemblies required

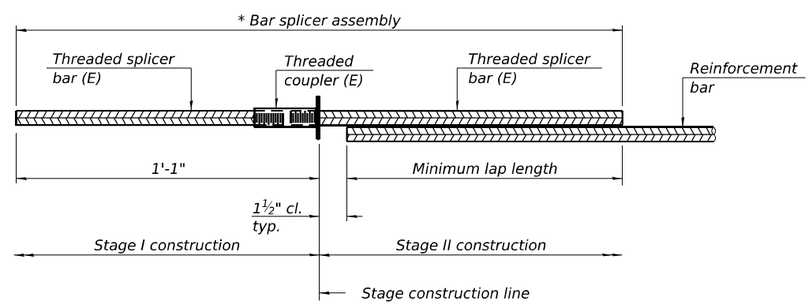

STANDARD BAR SPLICER ASSEMBLY PLAN

Only bar splicer assemblies as presented on the approved QPL list may be used.

Threaded splicer bar length = min. lap length + 1½" + thread length

* Epoxy not required on Bar Splicer Assembly components used in conjunction with black bars.

Location	Bar size	No. assemblies required	Minimum lap length
Diaphragm, m13(E)	#6	8	3'-0"

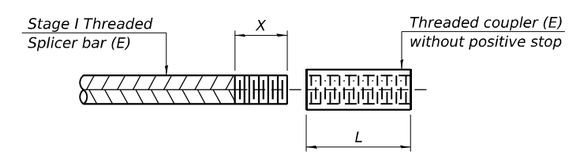

THREADING OF ASSEMBLIES

The threaded length "X" shall be no more than L/2. The bar should be tightened until 0-1 thread(s) is/are exposed.

Notes:
Splicer bars shall be deformed with threaded ends and have a minimum 60 ksi yield strength.
All reinforcement shall be lapped and tied to the splicer bars.
Bar splicer assemblies shall be epoxy coated according to the requirements for reinforcement bars. See Section 508 of the Standard Specifications.
See approved list of bar splicer assemblies and mechanical splicers for alternatives.

Illinois Department of Transportation
Division of Highways
District 9

SOIL BORING LOG

Date 9/27/22

ROUTE IL 3 DESCRIPTION Bridge over Worthen Bayou LOGGED BY L. Estel

SECTION 130 BY (Ex.) LOCATION 1.2 mi S. of IL 149/3 Int. (Near S. Abut.), SEC. 17, TWP. 9S, RNG. 3W, PM

COUNTY Jackson DRILLING METHOD HSA (8" OD, 3.25" ID)/Mud Rotary HAMMER TYPE Auto SPT 140 lbs HE 86.5%

STRUCT. NO. 039-0026
Station 104+12

BORING NO. 1-S
Station 105+21
Offset 11.0ft Rt
Ground Surface Elev. 365.4 ft

Surface Water Elev. 345.2 ft
Stream Bed Elev. 345 ft

Groundwater Elev.:
First Encounter ft
Upon Completion ft
After Hrs. ft

Description	Elev.	DEPTH (ft)	BLOWS	UCS Qu (tsf)	MOIST (%)
Cored Pavement, 4.5 in. HMA over 11.5 in. CONCRETE	364.10				
Stiff Grey, Moist SILTY CLAY LOAM	360.90		3		
			5	1.45	21
			5	S	
Medium Stiff Grey, Moist CLAY		-5	WOH		
			WOH	0.65	38
			1	B	
			WOH		
			1	0.8	45
			2	S	
		-10	1		
			2	0.8	41
			2	S	
			WOH		
			1	0.95	47
			3	B	
Stiff Grey, Moist CLAY	350.90	-15	1		
			2	1.4	38
			3	B	
Stiff Brownish Grey, Moist CLAY	348.40		1		
			2	1.4	41
			3	B	
		-20	1		

Description	Elev.	DEPTH (ft)	BLOWS	UCS Qu (tsf)	MOIST (%)
Stiff Brownish Grey, Moist CLAY *(continued)*			2	1.3	40
			4	S	
Medium Stiff Grey with specks of Brown, Moist CLAY	343.40		1		
			2	0.85	29
			3	B	
		-25	WOH		
Mud rotary drilling method begun at 25 ft			1	0.7	31
			2	B	
Medium Stiff Grey with specks of Brown, Moist CLAY	337.90		2		
Very Soft Grey, Moist SILTY LOAM			2	0.2	29
			2	B	
Medium Dense Brown and Grey, Moist fine SAND	335.90	-30	6		
			10		24
3% f. Gravel & c. SAND, 26% m. SAND, 65% f. SAND, 5% SILT, 2% CLAY, Non-plastic (Lab 49)			10		
			6		
			11		24
			11		
		-35			
			5		
			7		24
			8		
		-40			

The Unconfined Compressive Strength (UCS) Failure Mode is indicated by (B-Bulge, S-Shear, P-Penetrometer, E-Estimated)
Abbreviations W.O.H - Sampler Advanced By Weight of Hammer, W.O.P - Advanced by Weight of Pipe, B.S. - Before Seating
The SPT (N value) is the sum of the last two blow values in each sampling zone (AASHTO T206) BBS, from 137 (Rev. 8-99)

File Name S:\MATERIALS GEOTECHNICAL UNIT\GINTPROJECTS\PROJECTS FILE\JACKSON 039\STRUCTURES\039-0026 IL 3 OVER WORTHEN BAYOU GPJ Data Template D6TEMPLT.GDT Date Printed 10/25/22
Latitude 37.7393683 Longitude -89.4634841 Datum NAD83 Job Number

Illinois Department of Transportation
Division of Highways
District 9

SOIL BORING LOG

Date 9/27/22

ROUTE IL 3 DESCRIPTION Bridge over Worthen Bayou LOGGED BY L. Estel

SECTION 130 BY (Ex.) LOCATION 1.2 mi S. of IL 149/3 Int. (Near S. Abut.), SEC. 17, TWP. 9S, RNG. 3W, PM

COUNTY Jackson DRILLING METHOD HSA (8" OD, 3.25" ID)/Mud Rotary HAMMER TYPE Auto SPT 140 lbs HE 86.5%

STRUCT. NO. 039-0026
Station 104+12

BORING NO. 1-S
Station 105+21
Offset 11.0ft Rt
Ground Surface Elev. 365.4 ft

Surface Water Elev. 345.2 ft
Stream Bed Elev. 345 ft

Groundwater Elev.:
First Encounter ft
Upon Completion ft
After Hrs. ft

Description	Elev.	DEPTH (ft)	BLOWS	UCS Qu (tsf)	MOIST (%)
Medium Dense Brown and Grey, Moist fine SAND					
3% f. Gravel & c. SAND, 26% m. SAND, 65% f. SAND, 5% SILT, 2% CLAY, Non-plastic (Lab 49) *(continued)*	322.40				
Dense Brown and Grey, Moist m. SAND with Pebbles			6		
			15		16
			16		
19% f. Gravel & c. SAND, 48% m. SAND, 28% f. SAND, 4% SILT, 1% CLAY, Non-plastic (Lab 52)		-45			
			8		
			17		16
			20		
		-50			
	312.40				
Medium Dense Brown and Grey, Moist m. SAND with Pebbles			9		
			14		16
			15		
19% f. Gravel & c. SAND, 48% m. SAND, 28% f. SAND, 4% SILT, 1% CLAY, Non-plastic (Lab 52)		-55			
			8		
			9		16
			12		
		-60			

Description	Elev.	DEPTH (ft)	BLOWS	UCS Qu (tsf)	MOIST (%)
Medium Dense Brown and Grey, Moist m. SAND with Pebbles					
19% f. Gravel & c. SAND, 48% m. SAND, 28% f. SAND, 4% SILT, 1% CLAY, Non-plastic (Lab 52) *(continued)*					
			7		
			10		16
			12		
	300.90	-65			
Bottom of hole @ 64.5 ft					
Hollow stem auger sampling from 0 to 25 ft					
Mud rotary drilling operation from 25 to 64.5 ft		-70			
Free water undetermined					
To convert "N" values to "N60", multipy by 1.44, Hammer efficiency = 86.5%					
Ground surface elevation referenced to BM 039-0026; Cut square on NE wingwall at Pier; EL 365.72		-75			
		-80			

The Unconfined Compressive Strength (UCS) Failure Mode is indicated by (B-Bulge, S-Shear, P-Penetrometer, E-Estimated)
Abbreviations W.O.H - Sampler Advanced By Weight of Hammer, W.O.P - Advanced by Weight of Pipe, B.S. - Before Seating
The SPT (N value) is the sum of the last two blow values in each sampling zone (AASHTO T206) BBS, from 137 (Rev. 8-99)

File Name S:\MATERIALS GEOTECHNICAL UNIT\GINTPROJECTS\PROJECTS FILE\JACKSON 039\STRUCTURES\039-0026 IL 3 OVER WORTHEN BAYOU GPJ Data Template D6TEMPLT.GDT Date Printed 10/25/22
Latitude 37.7393683 Longitude -89.4634841 Datum NAD83 Job Number

MODEL: Default
FILE NAME: S:\2021\21IL033 - PTB 199-38 D9 - QEI - Various HIWO-12 & 20 - IL-3 BR Replace 039-0026 PH1-2\CADD\CADD Sheets\0390083-78967-025-Boring Logs.dgn

QUIGG ENGINEERING INC
DESIGN FIRM REG. NO. 184.004721-0014

USER NAME = SCaro	DESIGNED - DAP	REVISED -	
0390083-78967-025-Boring Logs.dgn	CHECKED - RPW	REVISED -	
PLOT SCALE = $SCALE$	DRAWN - ASC	REVISED -	
PLOT DATE =	CHECKED - MDC	REVISED -	

STATE OF ILLINOIS
DEPARTMENT OF TRANSPORTATION

BORING LOGS
STRUCTURE NO. 039-0083

SHEET 25 OF 31 SHEETS

F.A.P RTE.	SECTION	COUNTY	TOTAL SHEETS	SHEET NO.
312	130B-1	JACKSON	83	54
		CONTRACT NO. 78967		
	ILLINOIS	FED. AID PROJECT		

12/2/2025 3:48:00 PM

Illinois Department of Transportation
Division of Highways
District 9

SOIL BORING LOG

Date 9/28/22

ROUTE IL 3 DESCRIPTION Bridge over Worthen Bayou LOGGED BY L. Estel

SECTION 130 BY (Ex.) LOCATION 1.2 mi S. of IL 149/3 Int. (Near N. Abut.), SEC. 17, TWP. 9S, RNG. 3W, PM

COUNTY Jackson DRILLING METHOD HSA (8" OD, 3.25" ID)/Mud Rotary HAMMER TYPE Auto SPT 140 lbs HE 86.5%

STRUCT. NO. 039-0026
Station 104+12

BORING NO. 2-S
Station 103+11
Offset 11.0ft Lt
Ground Surface Elev. 365.27 ft

Surface Water Elev. 345.2 ft
Stream Bed Elev. 345 ft

Groundwater Elev.:
First Encounter 340.3 ft
Upon Completion ft
After ___ Hrs. ft

Description	Elev.	DEPTH (ft)	BLOWS	UCS Qu (tsf)	MOIST (%)
Cored Pavement, 4 in. HMA over 11 in. CONCRETE	363.97				
Soft Grey, Moist SILTY LOAM	360.77		2		
			6 7	0.25 P	12
Medium Stiff Grey, Moist CLAY		-5	1 1 2	0.9 B	46
			1		
			1 1	0.55 B	51
Soft Grey, Moist CLAY	355.77	-10	WOH		
			1 1	0.4 B	26
Stiff Dark Grey, Moist CLAY	353.27		1		
			2 3	1.45 B	45
		-15	1 2 4	1.65 S	38
			1		
			3 4	1.65 B	40
	345.77	-20	1		
Stiff Grey with mottled Brown and Black, Moist CLAY *(continued)*			2 4	1.35 B	40
Soft Grey and Brown, Moist CLAY	343.27		WOH		
			1 2	0.4 B	28
Soft Grey, Moist to Very Moist SILTY LOAM	340.77	-25	WOH		
			1 1	0.15 B	29
Mud rotary drilling method begun at 27 ft	338.27		WOH		
Loose Brown, Moist SANDY LOAM			2 4		21
3% m. SAND, 67% f. SAND, 25% SILT, 5% CLAY, Non-Plastic (Lab 50)		-30	WOH		
			1 4		21
Medium Dense Grey, Moist SAND with PEBBLES	333.27		7		
			12 16		19
18% f. GRAVEL & c. SAND, 31% m. SAND, 46% f. SAND, 3% SILT, 1% CLAY, Non-Plastic (Lab 51)		-35			
			4		
			9 9		19
		-40			

The Unconfined Compressive Strength (UCS) Failure Mode is indicated by (B-Bulge, S-Shear, P-Penetrometer, E-Estimated)
Abbreviations W.O.H - Sampler Advanced By Weight of Hammer, W.O.P - Advanced by Weight of Pipe, B.S. - Before Seating
The SPT (N value) is the sum of the last two blow values in each sampling zone (AASHTO T206) BBS, from 137 (Rev. 8-99)

File Name S:\MATERIALS GEOTECHNICAL UNIT\GINT\PROJECTS\PROJECTS FILE\JACKSON 039\STRUCTURES\039-0026 IL 3 OVER WORTHEN BAYOU.GPJ Data Template D6TEMPLT.GDT Date Printed 10/25/22
Latitude 37.7399551 Longitude -89.4633966 Datum NAD83 Job Number

Illinois Department of Transportation
Division of Highways
District 9

SOIL BORING LOG

Date 9/28/22

ROUTE IL 3 DESCRIPTION Bridge over Worthen Bayou LOGGED BY L. Estel

SECTION 130 BY (Ex.) LOCATION 1.2 mi S. of IL 149/3 Int. (Near N. Abut.), SEC. 17, TWP. 9S, RNG. 3W, PM

COUNTY Jackson DRILLING METHOD HSA (8" OD, 3.25" ID)/Mud Rotary HAMMER TYPE Auto SPT 140 lbs HE 86.5%

STRUCT. NO. 039-0026
Station 104+12

BORING NO. 2-S
Station 103+11
Offset 11.0ft Lt
Ground Surface Elev. 365.27 ft

Surface Water Elev. 345.2 ft
Stream Bed Elev. 345 ft

Groundwater Elev.:
First Encounter 340.3 ft
Upon Completion ft
After ___ Hrs. ft

Description	Elev.	DEPTH (ft)	BLOWS	UCS Qu (tsf)	MOIST (%)
Medium Dense Grey, Moist SAND with PEBBLES					
18% f. GRAVEL & c. SAND, 31% m. SAND, 46% f. SAND, 3% SILT, 1% CLAY, Non-Plastic (Lab 51) *(continued)*	322.27				
Medium Dense Grey, Moist SAND with PEBBLES			6		
			9 12		19
18% f. GRAVEL & c. SAND, 31% m. SAND, 46% f. SAND, 3% SILT, 1 % CLAY, Non-Plastic (Lab 51)		-45			
			6		
			9 13		19
		-50			
			9		
			14 16		19
		-55			
			6		
			13 16		19
		-60			
Medium Dense Grey, Moist SAND with PEBBLES					
18% f. GRAVEL & c. SAND, 31% m. SAND, 46% f. SAND, 3% SILT, 1 % CLAY, Non-Plastic (Lab 51) *(continued)*					
			5		
			9 12		19
		-65			
	298.27		6		
			11 14		19
		-70			
Bottom of hole @ 68.5 ft					
Hollow stem auger sampling from 0 to 27 ft					
Mud rotary drilling operation from 27 to 68.5 ft					
Free water encountered @ 25 ft					
To convert "N" values to "N60", multipy by 1.44. Hammer efficiency =86.5%		-75			
Ground surface elevation referenced to BM 039-0026; Cut square on NE wingwall at Pier; EL 365.72					
		-80			

The Unconfined Compressive Strength (UCS) Failure Mode is indicated by (B-Bulge, S-Shear, P-Penetrometer, E-Estimated)
Abbreviations W.O.H - Sampler Advanced By Weight of Hammer, W.O.P - Advanced by Weight of Pipe, B.S. - Before Seating
The SPT (N value) is the sum of the last two blow values in each sampling zone (AASHTO T206) BBS, from 137 (Rev. 8-99)

File Name S:\MATERIALS GEOTECHNICAL UNIT\GINT\PROJECTS\PROJECTS FILE\JACKSON 039\STRUCTURES\039-0026 IL 3 OVER WORTHEN BAYOU.GPJ Data Template D6TEMPLT.GDT Date Printed 10/25/22
Latitude 37.7399551 Longitude -89.4633966 Datum NAD83 Job Number

Illinois Department of Transportation
Division of Highways
Terracon

SOIL BORING LOG

Date 10/4/24

ROUTE IL 3 DESCRIPTION Bridge over Worthen Bayou LOGGED BY KEG

SECTION 130B-1 LOCATION 1.2 mi S. of IL 149/3 Int. (Near Pier), **SEC.** 17, **TWP.** 9S, **RNG.** 3W,
Latitude 37.73967, **Longitude** -89.463473

COUNTY Jackson DRILLING METHOD MUD ROTARY HAMMER TYPE Auto SPT 140 lb

STRUCT. NO. 039-0026 (EX) 039-0083 (PR)
Station 104+12.00

BORING NO. 3-S
Station 103+95.00
Offset 5.5 ft LT
Ground Surface Elev. 365.10 ft

Surface Water Elev. ft
Stream Bed Elev. ft

Groundwater Elev.:
First Encounter ft
Upon Completion ft
After ___ **Hrs.** ft

Description	Elev.	DEPTH (ft)	BLOWS (/6")	UCS Qu (tsf)	MOIST (%)
12" Concrete Pavement	364.10				
Blind drill down through the bridge deck to the bottom of Worthen Bayou at El 343.1		-5			
		-10			
		-15			
		-20			
Blind drill down through the bridge deck to the bottom of Worthen Bayou at El 343.1 *(continued)*	343.10				
Rotary down to first sample at 28.5'		-25			
	336.60	-30			
SAND - Gray, fine to coarse, loose to medium dense			13		
			31	-	18
Poor Recovery due to rock in casing			-		
			6		
			9	-	28
			9		
becomes dark gray, medium dense, w/organics			5		
		-35	5	-	28
			5		
becomes fine and dense			10		
			13	-	18
			17		
becomes medium dense		-40	6		
			9	-	26
			14		

The Unconfined Compressive Strength (UCS) Failure Mode is indicated by (B-Bulge, S-Shear, P-Penetrometer)
The SPT (N value) is the sum of the last two blow values in each sampling zone (AASHTO T206)

BBS, form 137 (Rev. 8-99)

Illinois Department of Transportation
Division of Highways
Terracon

SOIL BORING LOG

Date 10/4/24

ROUTE IL 3 DESCRIPTION Bridge over Worthen Bayou LOGGED BY KEG

SECTION 130B-1 LOCATION 1.2 mi S. of IL 149/3 Int. (Near Pier), **SEC.** 17, **TWP.** 9S, **RNG.** 3W,
Latitude , **Longitude**

COUNTY Jackson DRILLING METHOD MUD ROTARY HAMMER TYPE Auto SPT 140 lb

STRUCT. NO. 039-0026 (EX) 039-0083 (PR)
Station 104+12.00

BORING NO. 3-S
Station 103+95.00
Offset 5.5 ft LT
Ground Surface Elev. 365.10 ft

Surface Water Elev. ft
Stream Bed Elev. ft

Groundwater Elev.:
First Encounter ft
Upon Completion ft
After ___ **Hrs.** ft

Description	DEPTH (ft)	BLOWS (/6")	UCS Qu (tsf)	MOIST (%)
SAND - Gray, fine to coarse, loose to medium dense *(continued)*		8		
becomes coarse		12	-	14
		14		
with pebbles		7		
		7	-	16
	-45	11		
		9		
		12	-	15
		14		
		9		
		15	-	18
	-50	17		
		11		
		12	-	23
		12		
		5		
		7	-	19
	-55	8		
		7		
		11	-	22
		12		
4% gravel, 95.9% sand, 0.1% fines		8		
		9	-	17
	-60	12		

Description	DEPTH (ft)	BLOWS (/6")	UCS Qu (tsf)	MOIST (%)
SAND - Gray, fine to coarse, loose to medium dense *(continued)*				
		6		
		9	-	23
	-65	11		
		7		
		9	-	25
	-70	13		
		10		
		16	-	25
	-75	14		
		10		
		10	-	25
	-80	20		

The Unconfined Compressive Strength (UCS) Failure Mode is indicated by (B-Bulge, S-Shear, P-Penetrometer)
The SPT (N value) is the sum of the last two blow values in each sampling zone (AASHTO T206)

BBS, form 137 (Rev. 8-99)

SOIL BORING 24-1008.03 IL 3 OVER WORTHEN BAYOU.GPJ IL_DOT.GDT 11/11/24

Illinois Department of Transportation
Division of Highways
Terracon

SOIL BORING LOG

Date 10/4/24

ROUTE IL 3 DESCRIPTION Bridge over Worthen Bayou LOGGED BY KEG

SECTION 130B-1 LOCATION 1.2 mi S. of IL 149/3 Int. (Near Pier), SEC. 17, TWP. 9S, RNG. 3W,
Latitude , Longitude

COUNTY Jackson DRILLING METHOD MUD ROTARY HAMMER TYPE Auto SPT 140 lb

STRUCT. NO. 039-0026 (EX) 039-0083 (PR)
Station 104+12.00

BORING NO. 3-S
Station 103+95.00
Offset 5.5 ft LT
Ground Surface Elev. 365.10 ft

Surface Water Elev. ft
Stream Bed Elev. ft

Groundwater Elev.:
First Encounter ft
Upon Completion ft
After Hrs. ft

	DEPTH (ft)	BLOWS (/6")	UCS Qu (tsf)	MOIST (%)
SAND - Gray, fine to coarse, loose to medium dense *(continued)*		10		
	-85	10 14	-	19
becomes dense		12		
	275.10 -90	25 10	-	24
End of Boring				
	-95			
Elevation referenced to BM 039-0026, EL. 365.72				
Hammer Efficiency: 89.3%				
End of Boring	-100			

The Unconfined Compressive Strength (UCS) Failure Mode is indicated by (B-Bulge, S-Shear, P-Penetrometer)
The SPT (N value) is the sum of the last two blow values in each sampling zone (AASHTO T206)

BBS, form 137 (Rev. 8-99)

SOIL BORING 24-1008.03 IL 3 OVER WORTHEN BAYOU.GPJ IL_DOT.GDT 11/11/24

MODEL: Default
FILE NAME: S:\2021\21IL033 - PTB 199-38 D9 - QEI - Various I-Ill/WC-12 & 20 - IL-3 BR Replace 039-0026 PH1-2\CADD\CADD Sheets\0390083-78967-028-Boring Logs.dgn

QUIGG ENGINEERING INC
DESIGN FIRM REG. NO. 184.004721-0014

USER NAME = SCaro	DESIGNED - DAP	REVISED -	
0390083-78967-028-Boring Logs.dgn	CHECKED - RPW	REVISED -	
PLOT SCALE = $SCALE$	DRAWN - ASC	REVISED -	
PLOT DATE =	CHECKED - MDC	REVISED -	

STATE OF ILLINOIS
DEPARTMENT OF TRANSPORTATION

BORING LOGS
STRUCTURE NO. 039-0083

SHEET 28 OF 31 SHEETS

F.A.P RTE.	SECTION	COUNTY	TOTAL SHEETS	SHEET NO.
312	130B-1	JACKSON	83	57
		CONTRACT NO. 78967		
	ILLINOIS	FED. AID PROJECT		

12/2/2025 3:48:12 PM

Form No. B.D. 137

FOUNDATION BORINGS

Project

Route SBI 150

Section 130 BY

County Jackson

Will bearing piles be required.

Can trestle piles be driven.

Bridge over Northen Bayou

Station 104+12

Borings made by Gordon R. Benson

Sheet 1 of 5 Sheets

Date Jan 58

Boring No. 1

Boring located at Staion 104+78, 17 Ft Rt Center-line.

Surface of Ground.

Stiff dark mottled clay.

Qu-1.56

Stiff dark gray clear clay.

Qu-1.72

Qu-1.64

Qu-1.56

Stiff blue clear clay.

Qu-1.84

Qu-2.53

Very stiff blue clear clay.

Qu-2.12

Blows per 6" foot	Elevation	Elevation	Blows per 6" foot
		344.5	
		343.5	3
		343.0	
	364.6	342.0	
		341.0	2
	363.0	340.0	
	362.0	339.5	
1			17
	361.0	338.5	
	359.5		
1			
	358.5		
	357.0	334.5	
3			26
	356.0	333.5	
	355.5		
	354.5		
3			
	353.5		
	352.0	329.5	
4			13
	351.0	328.5	
	350.5	327.5	
	349.5		
3			
	348.5		
	347.0	324.5	
3			33
	346.0	323.5	
	345.5		

Stiff blue mottled slightly sandy clay.
Qu-1.52

Medium mottled very sandy clay.
Qu-0.60

Medium brown uniform fine sand.

Dense dark gray well graded subangular gravel.

039-0026

Form No. B.D. 137

FOUNDATION BORINGS

Project

Route SBI 150

Section 130 BY

County Jackson

Will bearing piles be required.

Can trestle piles be driven.

Bridge over Northen Bayou

Station 104+12

Borings made by Gordon R. Benson

Sheet 2 of 5 Sheets

Date Jan 58

Boring No. 1 Cont.

Dense gray well graded subangular sand.

Blows per 6" foot	Elevation	Elevation	Blows per 6" foot
44	319.5		
	318.5		
40	314.5		
	313.5		
48	309.5		
	308.5		

Will bearing piles be required.

Can trestle piles be driven.

MODEL: Default
FILE NAME: S:\2021\21ILI033 - PTB 199-38 D9 - QEI - Various HIWO-12 & 20 - IL-3 BR Replace 039-0026 PH1-2\CADD\CADD Sheets\0390083-78967-029-Boring Logs.dgn
12/2/2025 3:48:14 PM

QUIGG ENGINEERING INC
DESIGN FIRM REG. NO. 184.004721-0014

USER NAME = SCaro	DESIGNED - DAP	REVISED -	
0390083-78967-029-Boring Logs.dgn	CHECKED - RPW	REVISED -	
PLOT SCALE = $SCALE$	DRAWN - ASC	REVISED -	
PLOT DATE =	CHECKED - MDC	REVISED -	

STATE OF ILLINOIS
DEPARTMENT OF TRANSPORTATION

BORING LOGS
STRUCTURE NO. 039-0083

SHEET 29 OF 31 SHEETS

F.A.P RTE.	SECTION	COUNTY	TOTAL SHEETS	SHEET NO.
312	130B-1	JACKSON	83	58

CONTRACT NO. 78967

ILLINOIS FED. AID PROJECT

Form No. B. D. 137

FOUNDATION BORINGS

Project _____ Bridge over Worthen Bayou

Route SBI 150 Station 104+12

Section 130 BY Borings made by Francis Piefer

County Jackson

Sheet 3 of 5 Sheets

Date Jan 58

Will bearing piles be required. _____

Can trestle piles be driven. _____

Boring No. 2

Boring located at Station 103+40, 15 Ft Lt Centerline.

Surface of Ground.

Description	Blows per 6" foot	Elevation	Elevation	Blows per 6" foot	Description
		363.4	341.0	3	Very stiff blue clay fill.
Stiff gravelly clay fill.		362.5	340.0		Qu-1.64
			339.5		
Qu-1.48	1	361.0	338.5	2	Medium very sandy mottled clay.
		360.0	337.5		
			337.0		
Stiff dark gray clay. Qu-1.56	1	358.5	336.0	14	Medium brown fine sand.
		357.5	335.0		
			334.5		
Qu-1.72	2	356.0	333.5	44	Dense brown fine sand.
		355.0	332.5		
		354.5			
Qu-1.80	3	353.5	330.5		
		352.5			
Stiff blue-gray clay fill. Qu-1.88	3	351.0	328.5	12	
		350.0	327.5		
Qu-1.80	3	348.5			Medium gray fine sand.
		347.5			
		346.5			
Qu-2.45	3	346.0	323.5	11	
		345.0	322.5		
Very stiff blue clay fill.					
Qu-2.04	2	343.5			
		342.5			

Form No. B. D. 137

FOUNDATION BORINGS

Project _____ Bridge over Wothen Bayou

Route SBI 150 Station 104+12

Section 130 BY Borings made by Francis Piefer

County Jackson

Sheet 4 of 5 Sheets

Date Jan 58

Will bearing piles be required. _____

Can trestle piles be driven. _____

Boring No. 2

Description	Blows per 6" foot	Elevation	Elevation	Blows per 6" foot
		319.5		
Dense gray sand and gravel	38	318.5		
		317.5		
		316.5		
	80	313.5		
		312.5		
Very dense gray sand and gravel.				
	85	308.5		
		307.5		

MODEL: Default
FILE NAME: S:\2021\21ILI033 - PTB 199-38 D9 - QEI - Various HIWO-12 & 20 - IL-3 BR Replace 039-0026 PH1-2\CADD\CADD Sheets\0390083-78967-030-Boring Logs.dgn
12/2/2025 3:48:18 PM

QUIGG ENGINEERING INC
DESIGN FIRM REG. NO. 184.004721-0014

USER NAME = SCaro	DESIGNED - DAP	REVISED -	
0390083-78967-030-Boring Logs.dgn	CHECKED - RPW	REVISED -	
PLOT SCALE = $SCALE$	DRAWN - ASC	REVISED -	
PLOT DATE =	CHECKED - MDC	REVISED -	

STATE OF ILLINOIS
DEPARTMENT OF TRANSPORTATION

BORING LOGS
STRUCTURE NO. 039-0083

SHEET 30 OF 31 SHEETS

F.A.P RTE.	SECTION	COUNTY	TOTAL SHEETS	SHEET NO.
312	130B-1	JACKSON	83	59
		CONTRACT NO. 78967		
	ILLINOIS	FED. AID PROJECT		

Form No. B. D. 137

FOUNDATION BORINGS

Project _____ Bridge over Walthen Bayou _____ Sheet 5 of 5 Sheets

Route SBI 150 _____ Station 104+12 _____ Date Dec. 58

Section 130 BY _____ Borings made by Francis Pfefer

County Jackson

Will bearing piles be required. _____ Can trestle piles be driven. _____

Boring No. 3

Boring located at Station 103+85, 5 Ft Lt Center-line.

Surface of Ground.

Medium gray sandy clay.

Dense gray fine sand.

Blows per 6" foot	Elevation
	346.1
3	340.0
	339.0
	338.0
32	334.0
	333.0
34	329.0
	328.0

Elevation	Blows per 6" foot
326.0	
324.0	65
323.0	
319.0	58
318.0	
314.0	62
313.0	

Will bearing piles be required. _____ Can trestle piles be driven. _____

Dense gray fine sand.

Very dense gray fine sand, and occasional small gravel.

MODEL: Default
FILE NAME: S:\2021\21IL033 - PTB 199-38 D9 - QEI - Various I-Ill/VC-12 & 20 - IL-3 BR Replace 039-0026 PH1-2\CADD\CADD Sheets\0390083-78967-031-Boring Logs.dgn

QUIGG ENGINEERING INC
DESIGN FIRM REG. NO. 184.004721-0014

USER NAME = SCaro	DESIGNED - DAP	REVISED -	
0390083-78967-031-Boring Logs.dgn	CHECKED - RPW	REVISED -	
PLOT SCALE = $SCALE$	DRAWN - ASC	REVISED -	
PLOT DATE =	CHECKED - MDC	REVISED -	

STATE OF ILLINOIS
DEPARTMENT OF TRANSPORTATION

BORING LOGS
STRUCTURE NO. 039-0083

SHEET 31 OF 31 SHEETS

F.A.P RTE.	SECTION	COUNTY	TOTAL SHEETS	SHEET NO.
312	130B-1	JACKSON	83	60

CONTRACT NO. 78967

ILLINOIS | FED. AID PROJECT

12/2/2025 3:48:22 PM

F.A.P. RTE.	SECTION	COUNTY	TOTAL SHEETS	SHEET NO.
	*	JACKSON	14	
STA.		TO STA.		
FED. ROAD DIST. NO.	ILLINOIS	FED. AID PROJECT		

* CONT. MAINT. FY2002-1

STATE OF ILLINOIS
DEPARTMENT OF TRANSPORTATION

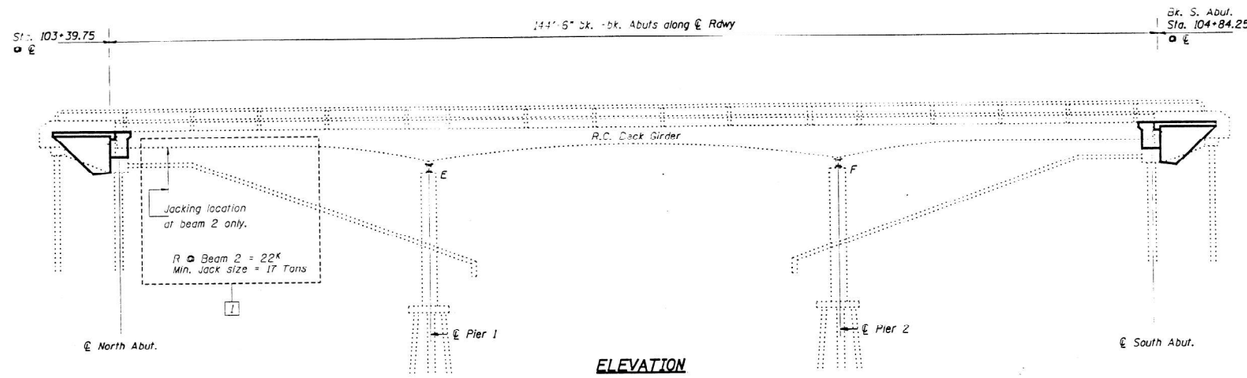

ELEVATION

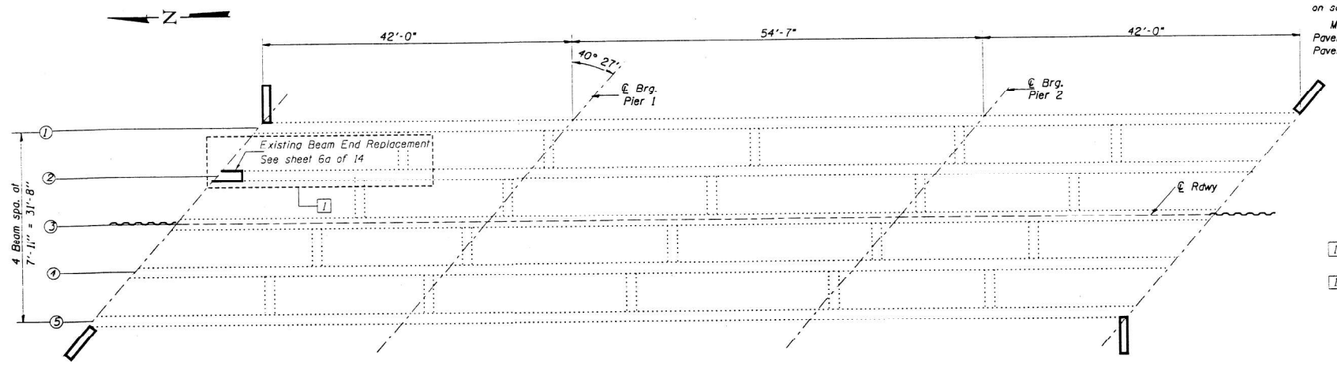

FRAMING PLAN

Sequence of Construction

1. Remove Stage I Bit. Wearing Surface
2. Perform Stage I Repairs and Overlay
3. Remove Stage II Bit. Wearing Surface
4. Perform Stage II Repairs and Overlay

Design Stresses

(Exist. Construction)

fc = 1400 psi (Super)
fc = 1000 psi (Sub)
fs = 20,000 psi (Reinf.)
n = 10

(New Construction)

fc' = 3,500 psi (Concrete)
fy = 60,000 psi (Reinforcement)

DESIGNED	T. Wayne Halstead
CHECKED	Mike Stephenson
DRAWN	T. Wayne Halstead
CHECKED	TWH MAS CMW

GENERAL NOTES

Plan dimensions and details relative to existing structure have been taken from existing plans and are subject to nominal construction variations. It shall be the Contractor's responsibility to verify such dimensions and details in the field and make necessary approved adjustments prior to construction or ordering of materials. Such variations shall not be cause for additional compensation for a change in the scope of the work, however, the Contractor will be paid for the quantity actually furnished at the unit price bid for the work.

Reinforcement bars shall conform to the requirements of AASHTO M-31, M-42 or M-53 Grade 60.

Factors used for estimating plan quantities are as follows and shall not be used for the basis of final quantities.

All Bituminous Concrete 2.016 Tons/Cu. Yd.
Bituminous Material (Prime Coat) .09 Gal/Sq. Yd.

Butt Joints shall not be cut until staged bridge work is done.

Existing reinforcement bars extending into the removal area shall be cleaned, straightened and incorporated into new construction. Any reinforcement bars that are damaged during Concrete Removal shall be replaced with an approved bar splicer or anchorage system. Cost included with Concrete Removal.

The Existing slopewall shall be removed as directed by the Engineer in order to install the new dog ear wingwalls. The cost to be included with Concrete Superstructure.

Protective coat shall be applied to the Concrete Wearing Surface in accordance with Article 503.19 of the Standard Specifications. The seasonal exception shall not apply. The rate of application for each coat on saw cut grooved areas shall be 25 Sq. Yds. per gallon of mixture.

Mechanical Splicers and all reinforcement within the Bridge Approach Pavement, Specials, shall be included in the cost of Bridge Approach Pavement, Special.

TOTAL BILL OF MATERIAL

	ITEM	UNIT	QUANTITY
	Concrete Removal	Cu. Yd.	38.7
1	Concrete Superstructure	Cu. Yd.	43.3
	Bridge Deck Grooving	Sq. Yd.	441
1	Reinforcement Bars, Epoxy Coated	Pound	12900
	Steel Bridge Rail	Foot	290
	Deck Slab Repair (Partial Depth)	Sq. Yd.	33
	Bar Splicers	Each	245
	Temporary Sheet Piling	Sq. Ft.	242
	Concrete Wearing Surface	Sq. Yd.	473
	Structure Excavation	Cu. Yd.	159.6
	Porous Granular Embankment	Cu. Yd.	159.6
	Conc. Bridge Deck Scarification (1/2")	Sq. Yd.	449
	Bit. Concrete Removal (Deck)	Sq. Yd.	473
	Protective Coat	Sq. Yd.	473
1	Jacking and Cribbing	L.S.	1

General Plan & Elevation
IL Rte. 3 over Worthen Bayou
Jackson County
Structure No. 039-0026
Sta. 104+12.00

1 Revised 4-2-02 V.H.V.

...\projects\jfs00004\0390026.dgn 04/02/2002 09:35:39 AM

FOR INFORMATION ONLY

MODEL: Default
FILE NAME: S:\2021\21ILI033 - PTB 199-38 D9 - QEI - Various HIWC-12 & 20 - IL-3 BR Replace 039-0026 PH1-2\CADD\CADD Sheets\Existing Plans\0390026-78967-001-Existing Bridge Plans.dgn

QUIGG ENGINEERING INC
DESIGN FIRM REG. NO. 184.004721-0014

USER NAME = SCaro	DESIGNED - DAP	REVISED -	
0390026-78967-001-Existing Bridge Plans.dgn	CHECKED - RPW	REVISED -	
PLOT SCALE = $SCALE$	DRAWN - ASC	REVISED -	
PLOT DATE =	CHECKED - MDC	REVISED -	

STATE OF ILLINOIS
DEPARTMENT OF TRANSPORTATION

EXISTING BRIDGE PLANS
STRUCTURE NO. 039-0026
SHEET 1 OF 9 SHEETS

F.A.P RTE.	SECTION	COUNTY	TOTAL SHEETS	SHEET NO.
312	130B-1	JACKSON	83	61
		CONTRACT NO. 78967		
	ILLINOIS	FED. AID PROJECT		

12/2/2025 3:48:25 PM

F.A.P. RTE.	SECTION	COUNTY	TOTAL SHEETS	SHEET NO.
312	*	JACKSON	14	4
STA.		TO STA.		
FED. ROAD DIST. NO.	ILLINOIS	FED. AID PROJECT		

*CONT. MAINT. FY2002 1

STATE OF ILLINOIS
DEPARTMENT OF TRANSPORTATION

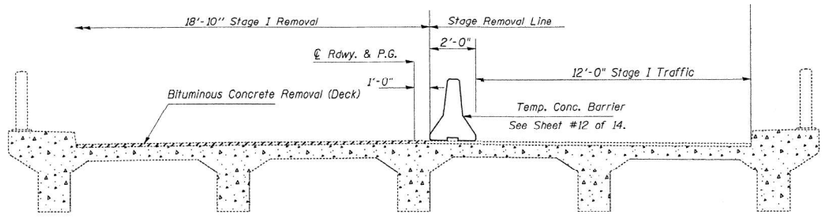

STAGE I REMOVAL

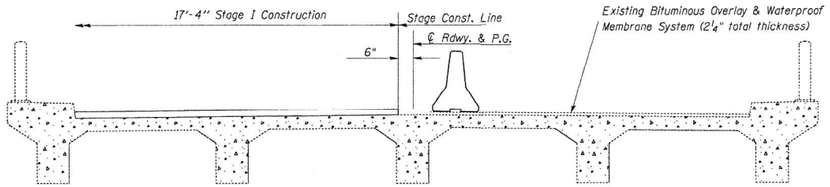

STAGE I CONSTRUCTION

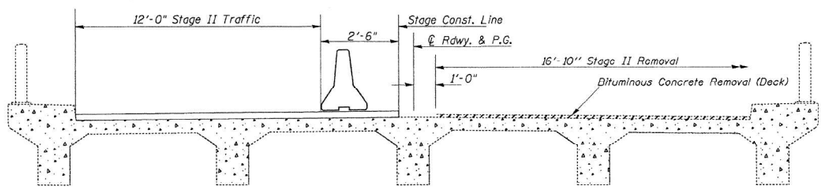

STAGE II REMOVAL

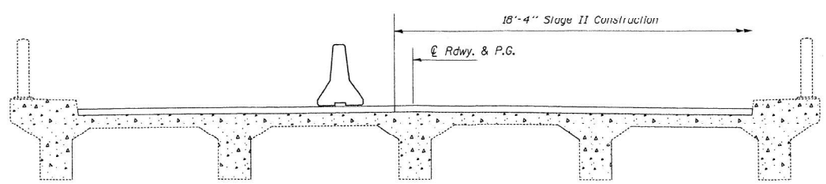

STAGE II CONSTRUCTION

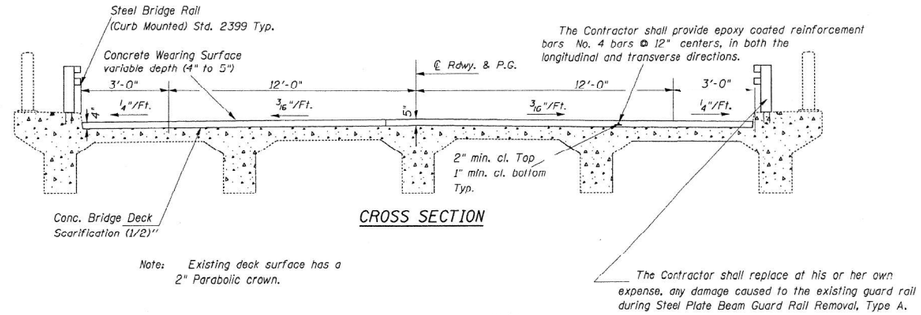

CROSS SECTION

Note: Existing deck surface has a 2" Parabolic crown.

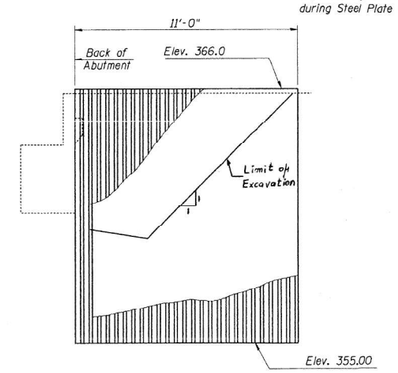

Minimum Section Modulus = 7.0 Cu. In per Ft.
Embedment = 11'-0"

TEMPORARY SHEET PILING

South Abutment (Looking East) North Abutment (Looking West)

The Contractor shall anchor the sheet piling to the top of the abutment walls. The connection shall be approved by the Engineer.

If the Contractor chooses to alter the temporary cantilevered sheet piling design requirements, then full design submittals with the required seals will be expected by the Department, for review and approval.
All Cross Sections are looking South.

DESIGNED	T. Wayne Halstead
CHECKED	Mike Stephenson
DRAWN	T. Wayne Halstead
CHECKED	TWH MAS CMW

STAGE CONSTRUCTION DETAILS
SN 039-0026

FOR INFORMATION ONLY

MODEL: Default
FILE NAME: S:\2021\21IL033 - PTB 199-38 D9 - QEI - Various HRWO-12 & 20 - IL-3 BR Replace 039-0026 PH1-2\CADD\CADD Sheets\Existing Plans\0390026-78967-002-Existing Bridge Plans.dgn
12/2/2025 3:48:29 PM

QUIGG ENGINEERING INC
DESIGN FIRM REG. NO. 184.004721-0014

USER NAME = SCaro	DESIGNED - DAP	REVISED -	
0390026-78967-002-Existing Bridge Plans.dgn	CHECKED - RPW	REVISED -	
PLOT SCALE = $SCALE$	DRAWN - ASC	REVISED -	
PLOT DATE =	CHECKED - MDC	REVISED -	

STATE OF ILLINOIS
DEPARTMENT OF TRANSPORTATION

EXISTING BRIDGE PLANS
STRUCTURE NO. 039-0026
SHEET 2 OF 9 SHEETS

F.A.P RTE.	SECTION	COUNTY	TOTAL SHEETS	SHEET NO.
312	130B-1	JACKSON	83	62
		CONTRACT NO. 78967		
	ILLINOIS	FED. AID PROJECT		

STATE OF ILLINOIS
DEPARTMENT OF TRANSPORTATION

F.A.P. RTE.	SECTION	COUNTY	TOTAL SHEETS	SHEET NO.
	*	JACKSON	14	6
STA.	TO STA.			
FED. ROAD DIST. NO.	ILLINOIS	FED. AID PROJECT		

CONTRACT NO. 78967

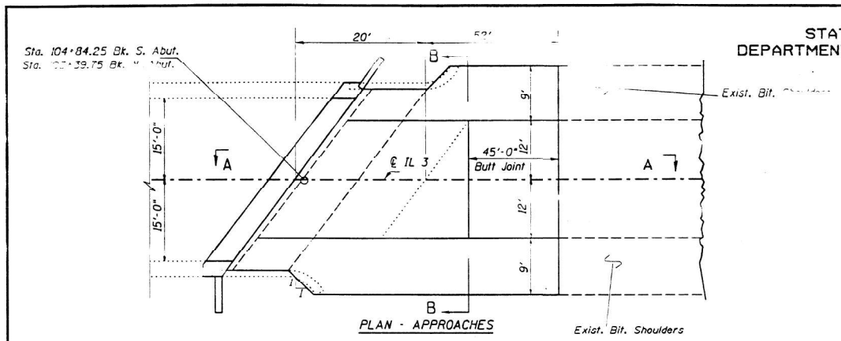

PLAN - APPROACHES

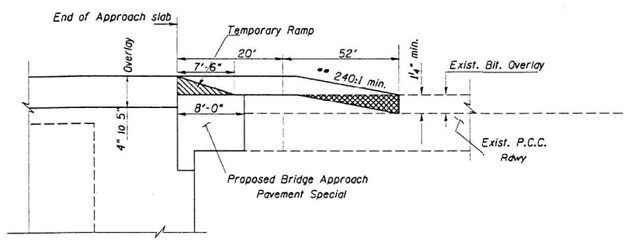

SECTION A-A
(Typical both ends of bridge)

Cross Hatched area indicates Bituminous Surface Removal - Butt Joint.

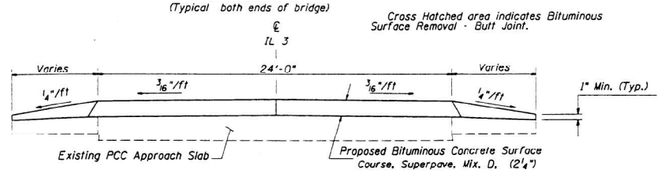

SECTION B-B
(Typical both ends of bridge)

Notes:

Bearings to remain in place.
Dimensions at right angles to abutment, except as shown.

Work this sheet with sheet 5 and 7 of 14.

The thickness of the approach slab above the backwall will vary to match the existing pavement slopes

* Included in the cost of Porous Granular Embankment

** The length of transition to the butt joint shall be verified by the Resident Engineer and may need to be lengthened to maintain a 240:1 minimum taper.

*** Epoxy grout v_1(E) bars in ¾" dia. x 9" minimun drilled holes according to Section 584 of the Standard Specs. Cost included in Reinforcement Bars, Epoxy Coated.

***** Existing longitudinal reinforcement in the bottom of the existing approach pavement are # 8 @ ±6½" centers. The contractor shall be permitted to modify the bridge approach pavement standard in order to accommodate the existing conditions with approval from the engineer.

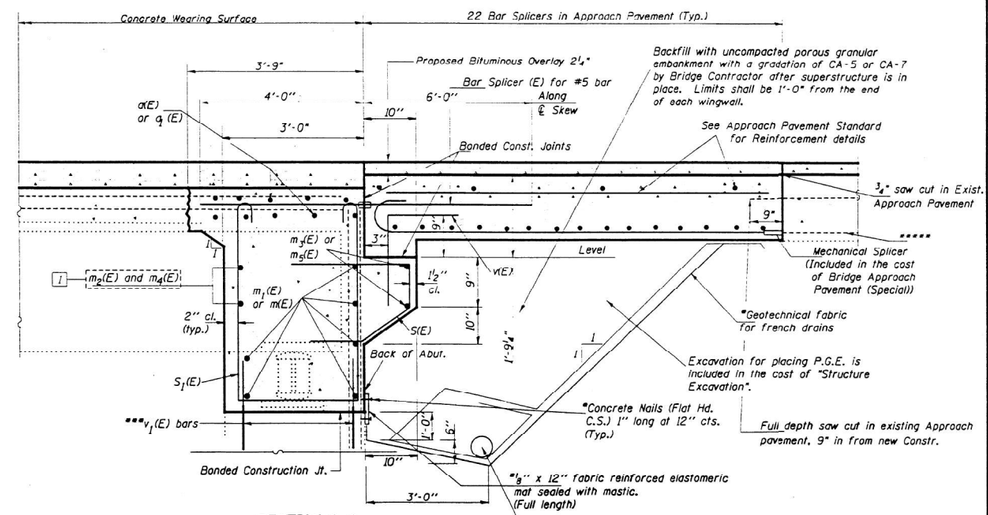

SECTION C-C
(Dimensions are at Right Angles)
S(E) and S_1(E) to be placed parallel to beams with spacings at right angles to beams

* A 6" perforated drain pipe shall be situated at the bottom of an approximate 2'x2' area of P.G.E. The 2'x2' area shall be wrapped completely in geotechnical fabric for french drains. Extend the pipe parallel with the cap until intersecting with the sideslope.

DESIGNED	T. Wayne Halstead
CHECKED	Mike Stephenson
DRAWN	T. Wayne Halstead
CHECKED	TWH MAS CMW

INTEGRAL ABUT. AND APPROACH OVERLAY DETAILS SN 039-0026

1 Revised 4-2-02 V.H.V.

...\projects\jfs00004\0390026.dgn 04/02/2002 09:36:30 AM

FOR INFORMATION ONLY

MODEL: Default
FILE NAME: S:\2021211L033 - PTB 199-38 D9 - QEI - Various I-HWO-12 & 20 - IL-3 BR Replace 039-0026 PH1-2\CADD\CADD Sheets\Existing Plans\0390026-78967-003-Existing Bridge Plans.dgn

QUIGG ENGINEERING INC
DESIGN FIRM REG. NO. 184.004721-0014

USER NAME = SCaro	DESIGNED - DAP	REVISED -	
0390026-78967-003-Existing Bridge Plans.dgn	CHECKED - RPW	REVISED -	
PLOT SCALE = $SCALE$	DRAWN - ASC	REVISED -	
PLOT DATE =	CHECKED - MDC	REVISED -	

STATE OF ILLINOIS
DEPARTMENT OF TRANSPORTATION

EXISTING BRIDGE PLANS
STRUCTURE NO. 039-0026
SHEET 3 OF 9 SHEETS

F.A.P RTE.	SECTION	COUNTY	TOTAL SHEETS	SHEET NO.
312	130B-1	JACKSON	83	63
		CONTRACT NO. 78967		
	ILLINOIS	FED. AID PROJECT		

12/2/2025 3:48:33 PM

F.A.P. RTE.	SECTION	COUNTY	TOTAL SHEETS	SHEET NO.
312	*	JACKSON	14	11
STA.		TO STA.		
FED. ROAD DIST. NO.	ILLINOIS	FED. AID PROJECT		

* CONT. MAINT. FY2002-1

STATE OF ILLINOIS
DEPARTMENT OF TRANSPORTATION

MIN. BAR LAP

#4 - 1'-4"

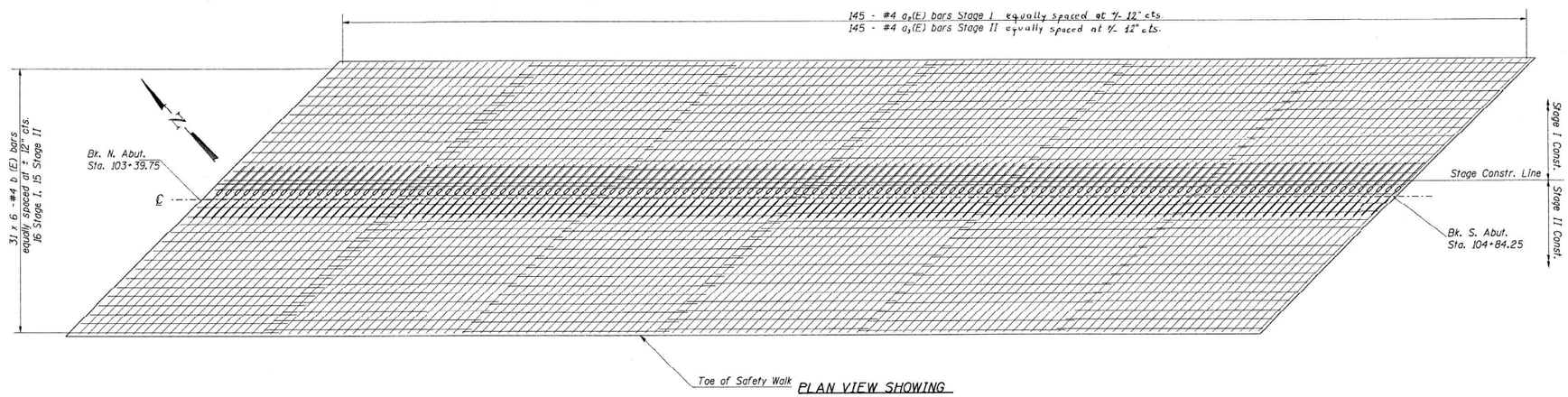

PLAN VIEW SHOWING OVERLAY REINFORCEMENT

BILL OF MATERIAL

Bar	No.	Size	Length	Shape
a_2(E)	145	#4	18'-8"	
a_3(E)	145	#4	20'-0"	
b(E)	186	#4	25'-3"	
Reinforcement Bars, Epoxy Coated			Pound	6880
Bar Splicers			Each	145

Notes:
Bars indicated thus 31 x 6- #4 indicates 31 lines of bars with 6 lengths per line.

DESIGNED	T. Wayne Halstead
CHECKED	Mike Stephenson
DRAWN	T. Wayne Halstead
CHECKED	TWH MAS CMW

REINFORCEMENT IN CONCRETE OVERLAY
SN 039-0026

FOR INFORMATION ONLY

MODEL: Default
FILE NAME: S:\2021\21IL033 - PTB 199-38 D9 - QEI - Various HIWC-12 & 20 - IL-3 BR Replace 039-0026 PH1-2\CADD\CADD Sheets\Existing Plans\0390026-78967-004-Existing Bridge Plans.dgn
12/2/2025 3:48:37 PM

QUIGG ENGINEERING INC
DESIGN FIRM REG. NO. 184.004721-0014

USER NAME = SCaro	DESIGNED - DAP	REVISED -	
0390026-78967-004-Existing Bridge Plans.dgn	CHECKED - RPW	REVISED -	
PLOT SCALE = $SCALE$	DRAWN - ASC	REVISED -	
PLOT DATE =	CHECKED - MDC	REVISED -	

STATE OF ILLINOIS
DEPARTMENT OF TRANSPORTATION

EXISTING BRIDGE PLANS
STRUCTURE NO. 039-0026

SHEET 4 OF 9 SHEETS

F.A.P RTE.	SECTION	COUNTY	TOTAL SHEETS	SHEET NO.
312	130B-1	JACKSON	83	64
		CONTRACT NO. 78967		
	ILLINOIS	FED. AID PROJECT		

B.M. Cut in top S.W. Wing Wall of Bridge Rt. of Sta. 104+62 El. 364.61
Existing Structure: Pann. Truss 1 Span @ 104' R.C. Abutments. To be removed by Bridge Contractor. Salvage for re-erection
Temporary Road to be provided.

STATE OF ILLINOIS
DEPARTMENT OF PUBLIC WORKS & BUILDINGS
DIVISION OF HIGHWAYS

ROUTE NO.	SECTION	COUNTY	TOTAL SHEETS	SHEET NO.
F.A.S. 152 (Sta.)		Jackson	29	8
FED. ROAD DIST. NO. 1	ILLINOIS	FED. AID PROJECT-		

SHEET NO. 1
9 SHEETS

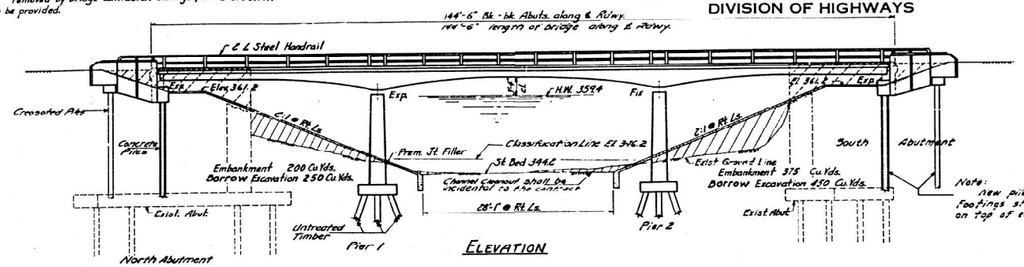

ELEVATION

Note:
New piles within the limits of the existing footings shall be driven to point bearing on top of existing footing.

The layout of slopewall is only approximate. The slopewall shall be built to fit conditions in field as determined by the Engineer.

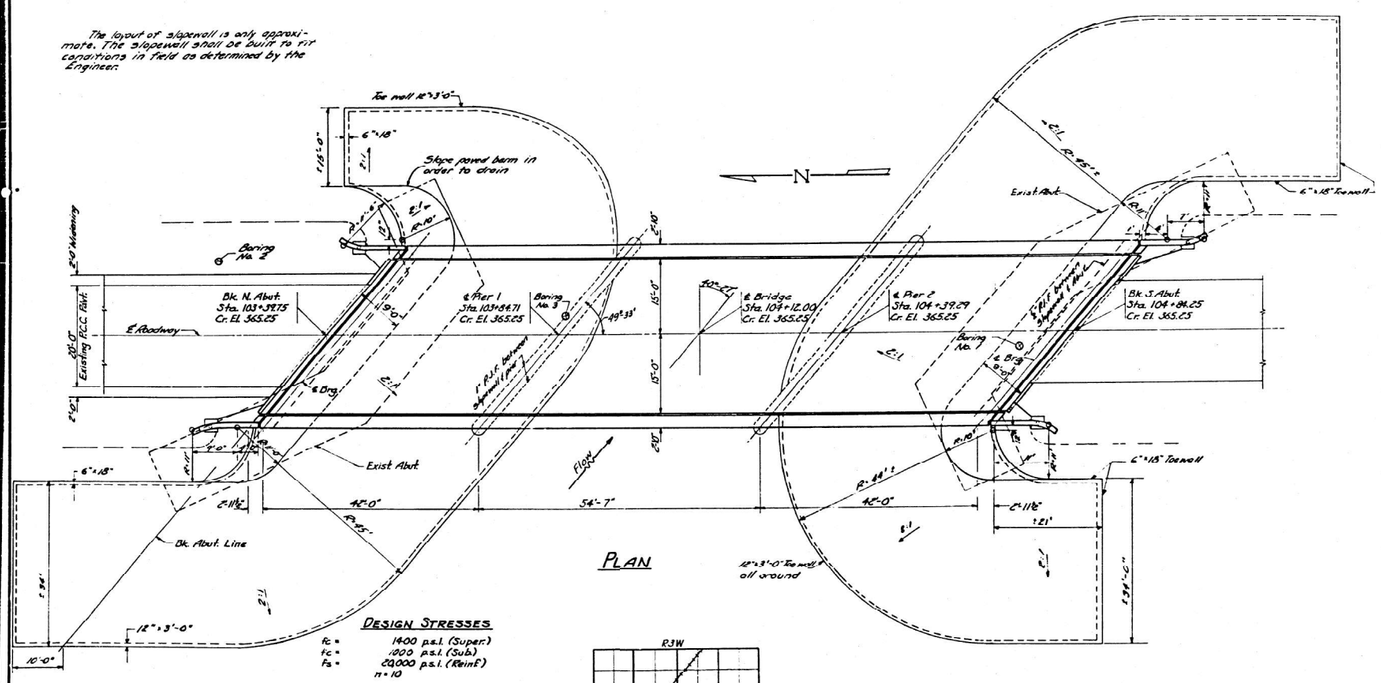

PLAN

General Notes

Class A Concrete shall be used in Piers.
Class X Concrete shall be used throughout except as noted.
Concrete Floor Slab and Girders shall be poured in one continuous operation between joints.
The Concrete Floor Slab shall be finished in accordance with the applicable provisions of Section 516 a. of the Standard Specifications.
Roadway Expansion Device shall be fabricated to fit the crown of roadway.
All rockers, bolsters, bearing plates, lead plates, pintles and anchor bolts shall be fabricated and set in accordance with Article 516 of the Standard Specifications and are included for payment as Structural Steel.
All Structural Steel except the Anchor Bolts and Straps shall receive one shop coat of red lead paint and two field coats of Aluminum paint in accordance with Article 571 to 575 inclusive of the Standard Specifications.
All paint shall be furnished and applied by the Contractor. Structural Steel shall be inspected by the Illinois Division of Highways before painting.
Expansion Device shall be included in quantity of Structural Steel.
Railings shall be adjusted to true alignment after curbs (safety walks) have been poured.
The Contractor shall drive one concrete test pile in a permanent location at the North Abutment and one timber test pile in a permanent location in Pier two before ordering the remainder of the piles.
Boring Data are shown on the drawings only as a guide to bidders in estimating soil conditions which may be encountered in the work.
Slope wall shall be reinforced with welded wire fabric of wires 6" x 6" mesh weighing not less than 58# per 100 sq. ft.

Total Bill of Material

Item	Unit	Super	Sub	Total
Class X Concrete	Cu. Yds.	242.2	61.4	303.6
Class A Concrete	Cu. Yds.		264.4	264.4
Reinforcement Bars	Lbs.	71,090	14,270	85,360
Structural Steel	Lbs.	10,360		10,360
Name Plates	Each	1		1
Metal Handrail	Lin. Ft.	316		316
Borrow Excavation	Cu. Yds.			100
Class B Excavation for Struct.	Cu. Yds.		310	310
Concrete Piles	Lin. Ft.		400	400
Creosoted Piles	Lin. Ft.		100	100
Untreated Piles	Lin. Ft.		1420	1420
Test Piles (Concrete)	Each		1	1
Test Piles (Timber)	Each		1	1
Removal Existing Structure	Each			1
Slope Wall	Sq. Yds.			1810

Design Stresses

f_c = 1400 p.s.i. (Super.)
f_c = 1000 p.s.i. (Sub)
f_s = 20000 p.s.i. (Reinf.)
n = 10

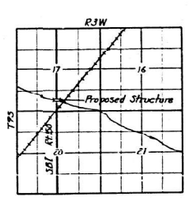

Waterway Information

Drainage Area	3263 Acres
Character	Level, Sand, Wooded & Cultivated
Required Opening	613 m²
Present Opening	613 m²
Proposed Opening	613 m²

DESIGNED Ronald C. Pub		
CHECKED Joseph J. Ramirez		
DRAWN F. Tiley		
CHECKED J. Ramirez		

April 18 1958
EXAMINED
PASSED
APPROVED

LOADING 1-20-3/8-4-4

General Plan & Elevation
S.B.T. Rt. 150 Sec. 130 BY
F.A. Proj. F-194 (14)
Bridge over Worthen Bayou
Jackson County
Sta. 104+12.0

FOR INFORMATION ONLY

STATE OF ILLINOIS
DEPARTMENT OF PUBLIC WORKS & BUILDINGS
DIVISION OF HIGHWAYS

5 B 1-58				
1 A	1-58	Jackson	24	1
FED. ROAD DIST. NO. 7	ILLINOIS	FED. AID PROJECT		

SHEET NO 2
9 SHEETS

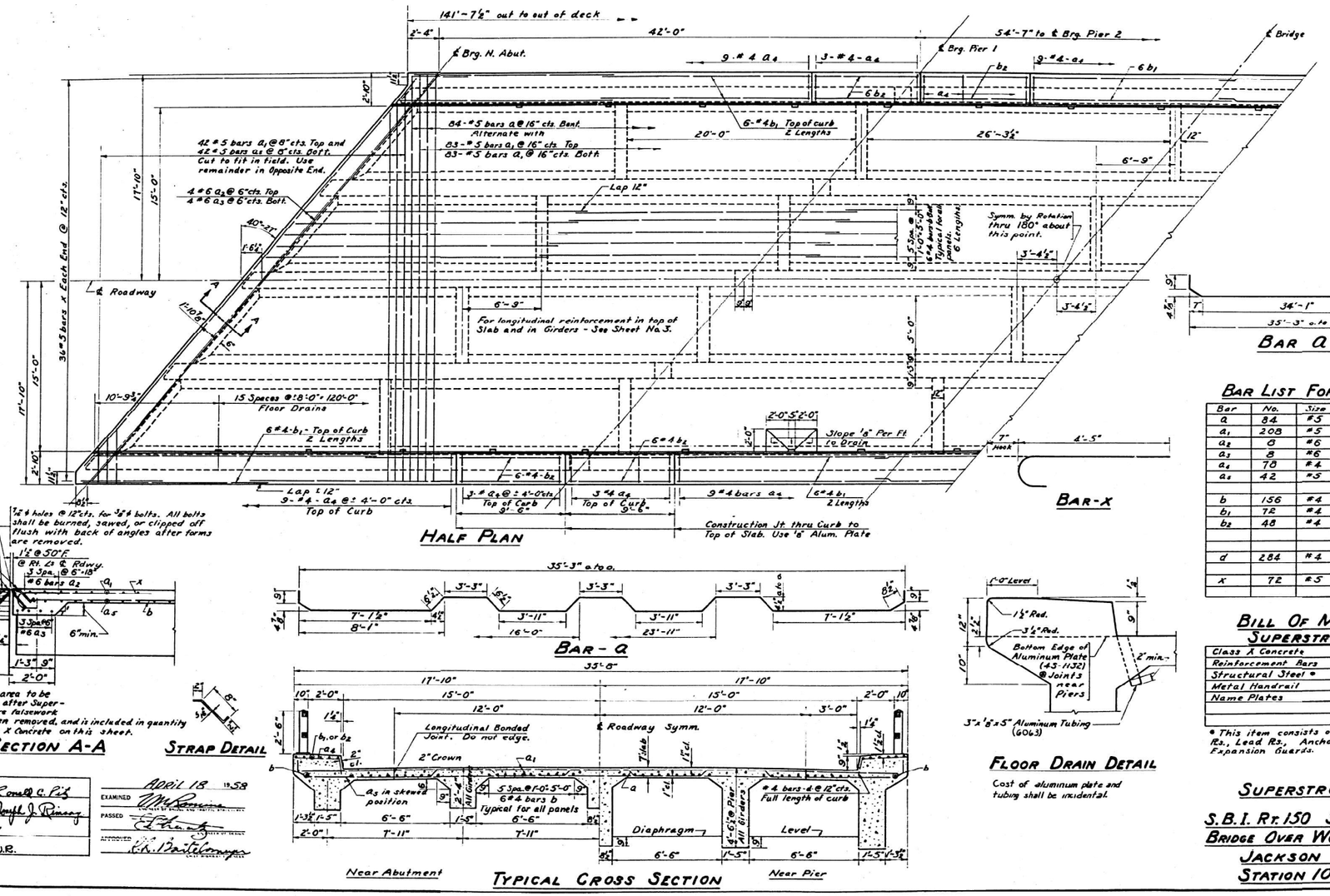

BAR LIST FOR SLAB

Bar	No.	Size	Length	Shape
a	84	#5	38'-0"	
a1	208	#5	34'-0"	
a2	8	#6	45'-0"	
a3	8	#6	42'-0"	
a4	70	#4	2'-5"	
a5	42	#5	37'-0"	
b	156	#4	24'-6"	
b1	72	#4	18'-0"	
b2	48	#4	9'-3"	
d	284	#4	1'-0"	
x	72	#5	5'-0"	

BILL OF MATERIAL
SUPERSTRUCTURE

Class X Concrete	Cu. Yds.	242.2
Reinforcement Bars	Lbs.	71,090
Structural Steel *	Lbs.	10,360
Metal Handrail	Lin. Ft.	316
Name Plates	Each	1

* This item consists of Rockers, Bearing Rs., Lead Rs., Anchor Bolts, and Expansion Guards.

DESIGNED	Ronald C. Pitz
CHECKED	Joseph J. Rimoy
DRAWN	
CHECKED	J.J.R.

APRIL 18 1958
EXAMINED
PASSED
APPROVED

SUPERSTRUCTURE
S.B.I. Rt. 150 Sec. 130 BY
Bridge Over Worthen Bayou
Jackson County
Station 104+12.0

FOR INFORMATION ONLY

MODEL: Default
FILE NAME: S:\2021\21IL033 - PTB 199-38 D9 - QEI - Various HRWC-12 & 20 - IL-3 BR Replace 039-0026 PH1-2\CADD\CADD Sheets\Existing Plans\0390026-78967-006-Existing Bridge Plans.dgn
12/2/2025 3:48:45 PM

QUIGG ENGINEERING INC
DESIGN FIRM REG. NO. 184.004721-0014

USER NAME = SCaro	DESIGNED - DAP	REVISED -	
0390026-78967-006-Existing Bridge Plans.dgn	CHECKED - RPW	REVISED -	
PLOT SCALE = $SCALE$	DRAWN - ASC	REVISED -	
PLOT DATE =	CHECKED - MDC	REVISED -	

STATE OF ILLINOIS
DEPARTMENT OF TRANSPORTATION

EXISTING BRIDGE PLANS
STRUCTURE NO. 039-0026
SHEET 6 OF 9 SHEETS

F.A.P RTE.	SECTION	COUNTY	TOTAL SHEETS	SHEET NO.
312	130B-1	JACKSON	83	66
		CONTRACT NO. 78967		
	ILLINOIS	FED. AID PROJECT		

STATE OF ILLINOIS
DEPARTMENT OF PUBLIC WORKS & BUILDINGS
DIVISION OF HIGHWAYS

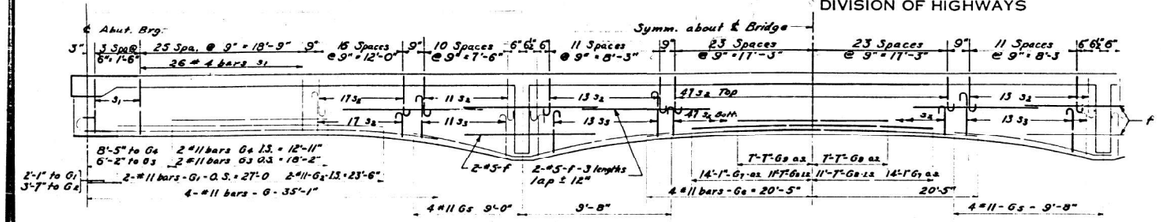

HALF ELEVATION OF GIRDERS

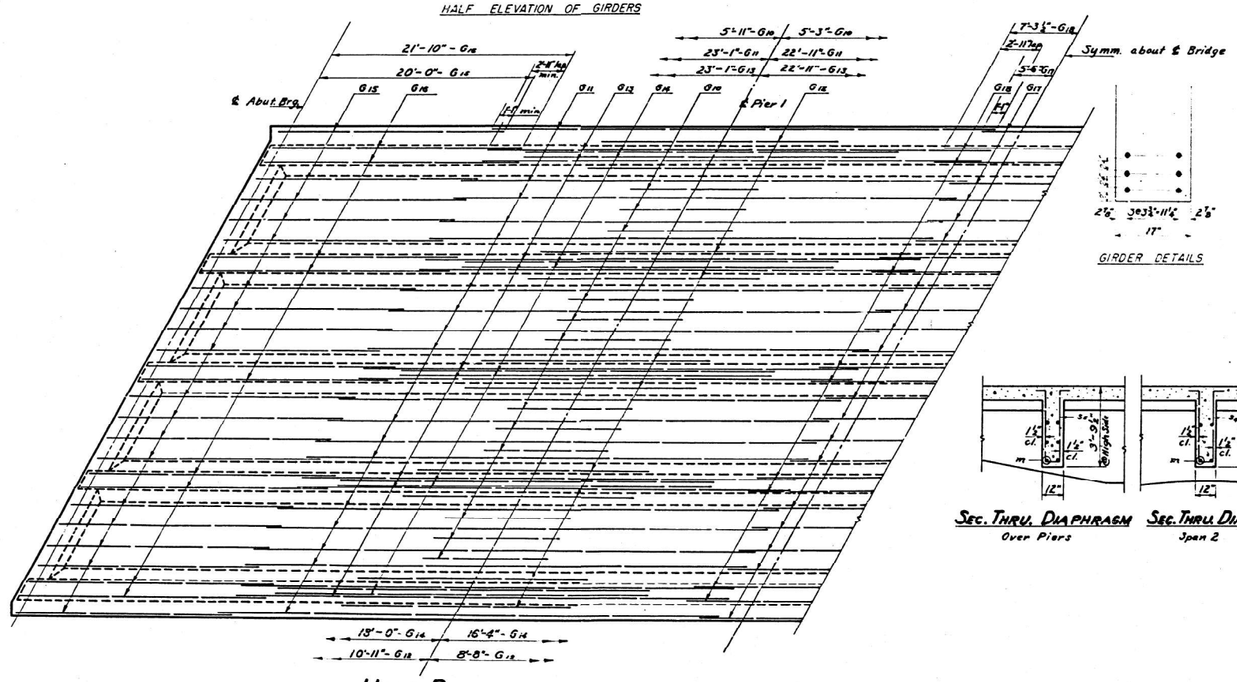

HALF PLAN
Showing Longitudinal Reinforcement in Top of Slab

GIRDER DETAILS

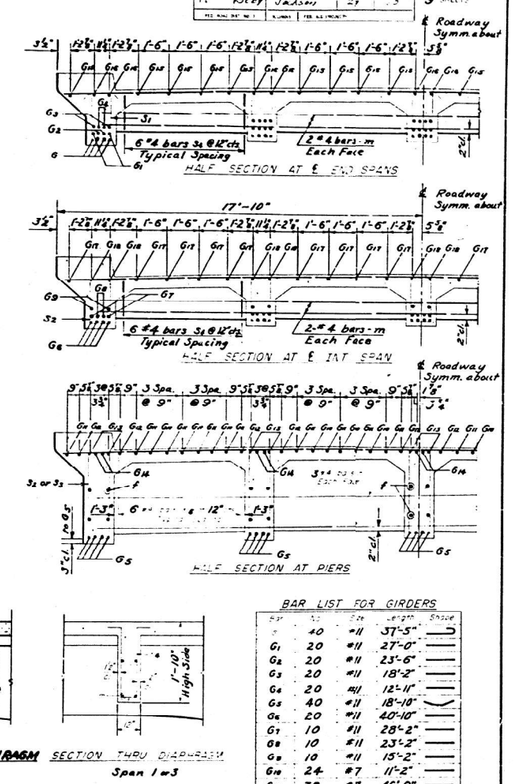

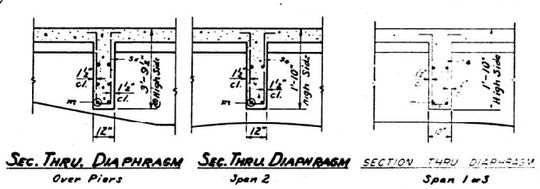

BAR LIST FOR GIRDERS

Bar	No.	Size	Length	Shape
3	40	#11	37'-5"	
G₁	20	#11	27'-0"	
G₂	20	#11	23'-6"	
G₃	20	#11	18'-2"	
G₄	20	#11	12'-11"	
G₅	40	#11	18'-10"	
G₆	20	#11	40'-10"	
G₇	10	#11	28'-2"	
G₈	10	#11	23'-2"	
G₉	10	#11	15'-2"	
G₁₀	24	#7	11'-2"	
G₁₁	38	#7	46'-0"	
G₁₂	20	#9	19'-7"	
G₁₃	20	#11	46'-0"	
G₁₄	20	#11	34'-4"	
G₁₅	36	#5	20'-3"	
G₁₆	20	#8	22'-0"	
G₁₇	18	#5	11'-0"	
G₁₈	10	#8	14'-7"	
m	96	#4	8'-3"	
3₁	290	#4	6'-2"	
3₂	1050	#4	5'-8"	
3₃	240	#4	8'-2"	
3₄	72	#4	4'-4"	
3₅	48	#4	8'-3"	
f	80	#5	12'-0"	
* Reinforcement Bars			LBS	53,310

Included in quantity on Sh. 2.

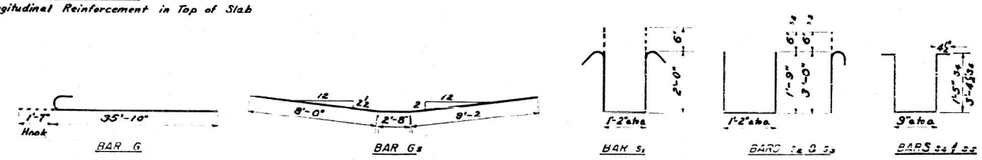

DESIGNED Ronald C. Pb
CHECKED Joseph J. Romano
DRAWN Rcd W. C. Sassman
CHECKED J.J.R.

APRIL 18 19 56
EXAMINED M. Romine
PASSED E. Thurst
APPROVED Ch. Bartlemay

-2 DRAWN 3-29-57

GIRDER DETAILS
S.B.I. RT. 150 SEC. 130 BY.
JACKSON COUNTY
STATION 104+12.0

FOR INFORMATION ONLY

MODEL: Default
FILE NAME: S:\2021\21IL033 - PTB 199-38 D9 - QEI - Various HIWC-12 & 20 - IL-3 BR Replace 039-0026 PH-2\CADD\CADD Sheets\Existing Plans\0390026-78967-007-Existing Bridge Plans.dgn

QUIGG ENGINEERING INC
DESIGN FIRM REG. NO. 184.004721-0014

USER NAME = SCaro	DESIGNED - DAP	REVISED -	
0390026-78967-007-Existing Bridge Plans.dgn	CHECKED - RPW	REVISED -	
PLOT SCALE = $SCALE$	DRAWN - ASC	REVISED -	
PLOT DATE =	CHECKED - MDC	REVISED -	

STATE OF ILLINOIS
DEPARTMENT OF TRANSPORTATION

EXISTING BRIDGE PLANS
STRUCTURE NO. 039-0026
SHEET 7 OF 9 SHEETS

F.A.P RTE.	SECTION	COUNTY	TOTAL SHEETS	SHEET NO.
312	130B-1	JACKSON	83	67
		CONTRACT NO. 78967		
	ILLINOIS	FED. AID PROJECT		

12/2/2025 3:48:48 PM

STATE OF ILLINOIS
DEPARTMENT OF PUBLIC WORKS & BUILDINGS
DIVISION OF HIGHWAYS

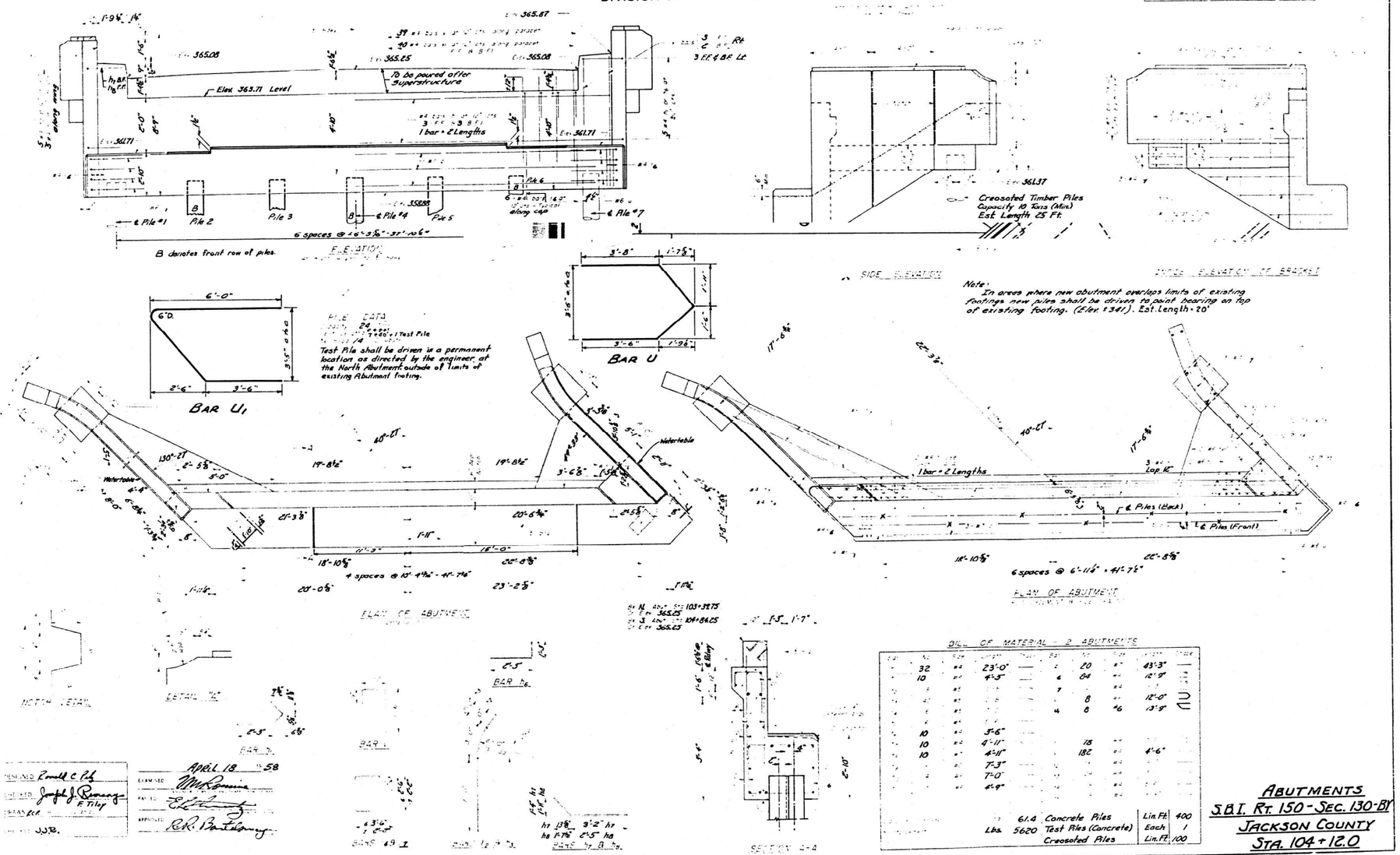

BILL OF MATERIAL - 2 ABUTMENTS

32	#4	23'-0"		20	#4	43'-3"		
10	#4	4'-5"		6	#4	12'-9"		
				7				
				8		12'-0"		
				4	8	#6	13'-9"	
10	#4	5'-6"						
10	#4	4'-11"		18	#4			
10	#4	4'-11"		182	#4	4'-6"		
		7'-3"						
		7'-0"						
		4'-9"						

	61.4	Concrete Piles	Lin. Ft. 400
Lbs.	5620	Test Piles (Concrete)	Each 1
		Creosoted Piles	Lin. Ft. 100

ABUTMENTS
S.B.I. RT. 150 - SEC. 130-B1
JACKSON COUNTY
STA. 104+12.0

FOR INFORMATION ONLY

MODEL: Default
FILE NAME: S:\2021\21IL033 - PTB 199-38 D9 - QEI - Various HRWC-12 & 20 - IL-3 BR Replace 039-0026 PH1-2\CAD\CADD Sheets\Existing Plans\0390026-78967-008-Existing Bridge Plans.dgn
12/2/2025 3:48:52 PM

QUIGG ENGINEERING INC
DESIGN FIRM REG. NO. 184.004721-0014

USER NAME = SCaro	DESIGNED - DAP	REVISED -	
0390026-78967-008-Existing Bridge Plans.dgn	CHECKED - RPW	REVISED -	
PLOT SCALE = $SCALE$	DRAWN - ASC	REVISED -	
PLOT DATE =	CHECKED - MDC	REVISED -	

STATE OF ILLINOIS
DEPARTMENT OF TRANSPORTATION

EXISTING BRIDGE PLANS
STRUCTURE NO. 039-0026
SHEET 8 OF 9 SHEETS

F.A.P RTE.	SECTION	COUNTY	TOTAL SHEETS	SHEET NO.
312	130B-1	JACKSON	83	68
		CONTRACT NO. 78967		
	ILLINOIS	FED. AID PROJECT		

STATE OF ILLINOIS
DEPARTMENT OF PUBLIC WORKS & BUILDINGS
DIVISION OF HIGHWAYS

ROUTE NO.	SECTION	COUNTY	TOTAL SHEETS	SHEET NO.
F.A.P. 150	130B-1	JACKSON	29	10
FED. ROAD DIST. NO. 1	ILLINOIS	FED. AID PROJECT		

SHEET NO 7
7 SHEETS

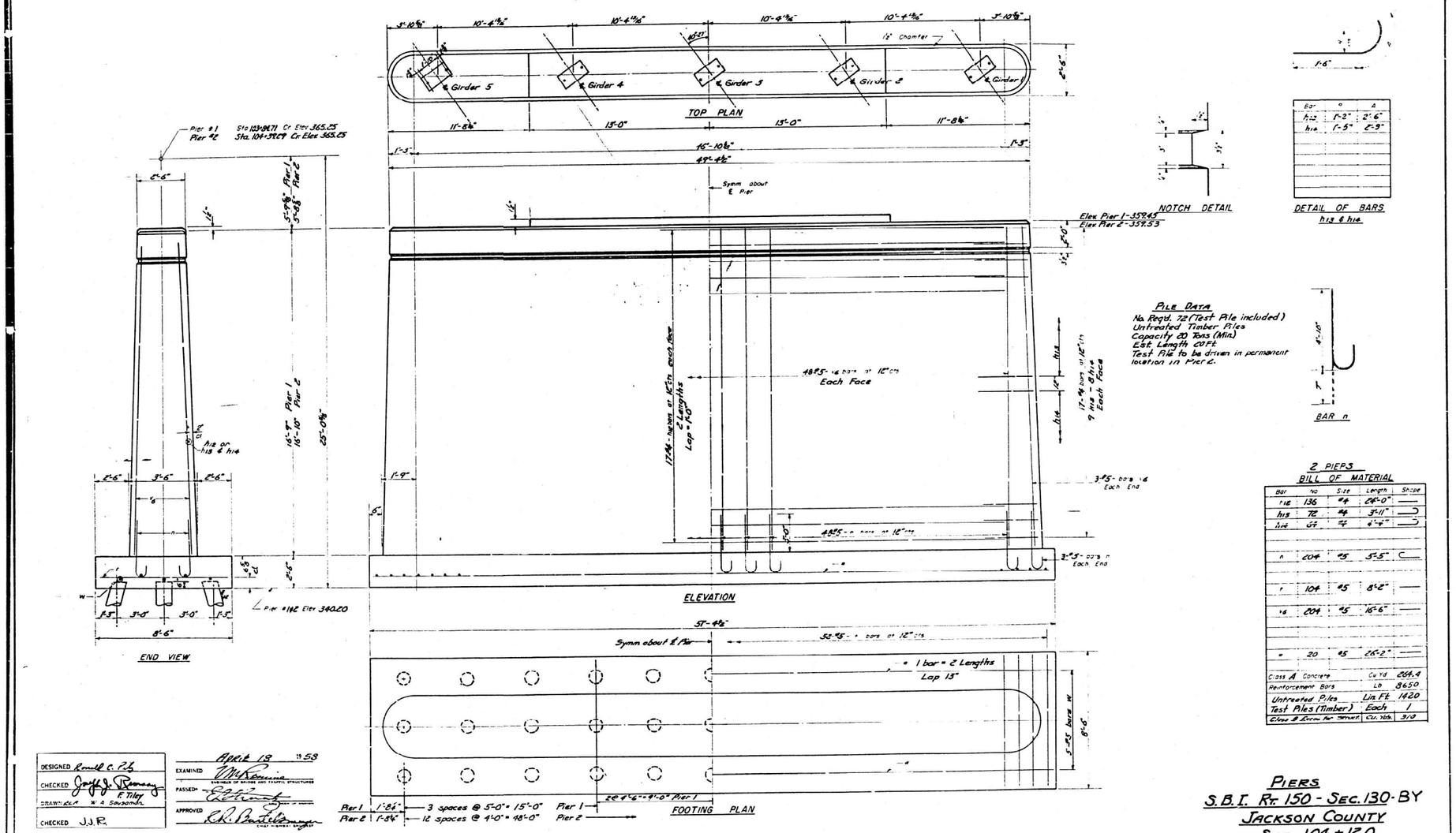

Bar	a	b
h13	1'-2"	2'-6"
h14	1'-5"	2'-9"

DETAIL OF BARS h13 & h14

PILE DATA
No. Reqd. 72 (Test Pile included)
Untreated Timber Piles
Capacity 20 Tons (Min)
Est. Length 60 Ft.
Test Pile to be driven in permanent location in Pier 2.

2 PIERS
BILL OF MATERIAL

Bar	No	Size	Length	Shape
f14	136	#4	24'-0"	
h13	72	#4	3'-11"	
h14	67	#4	4'-9"	
n	204	#5	5'-5"	
r	104	#5	8'-2"	
w	204	#5	16'-6"	
w	20	#5	26'-2"	
Class A Concrete			Cu Yd	224.4
Reinforcement Bars			Lb	8650
Untreated Piles			Lin Ft	1420
Test Piles (Timber)			Each	1
Class B Form for Structure			Cu. Yds.	3.0

DESIGNED	Ronald C. Pab	EXAMINED	April 18 1958
CHECKED	Joseph J. Ramsey	PASSED	
DRAWN	E. Tiley W. A. Sassanda	APPROVED	
CHECKED	J.J.R.		

D-1 DRAWN 4-1-57

PIERS
S.B.I. Rt. 150 - Sec. 130-BY
JACKSON COUNTY
STA. 104+12.0

FOR INFORMATION ONLY

MODEL: Default
FILE NAME: S:\2021\21IL033 - PTB 199-38 D9 - QEI - Various HIWC-12 & 20 - IL-3 BR Replace 039-0026 PH-2\CADD\CADD Sheets\Existing Plans\0390026-78967-009-Existing Bridge Plans.dgn

QUIGG ENGINEERING INC
DESIGN FIRM REG. NO. 184.004721-0014

USER NAME = SCaro	DESIGNED - DAP	REVISED -	
0390026-78967-009-Existing Bridge Plans.dgn	CHECKED - RPW	REVISED -	
PLOT SCALE = $SCALE$	DRAWN - ASC	REVISED -	
PLOT DATE =	CHECKED - MDC	REVISED -	

STATE OF ILLINOIS
DEPARTMENT OF TRANSPORTATION

EXISTING BRIDGE PLANS
STRUCTURE NO. 039-0026
SHEET 9 OF 9 SHEETS

F.A.P. RTE.	SECTION	COUNTY	TOTAL SHEETS	SHEET NO.
312	130B-1	JACKSON	83	69
		CONTRACT NO. 78967		
	ILLINOIS	FED. AID PROJECT		

12/2/2025 3:48:56 PM

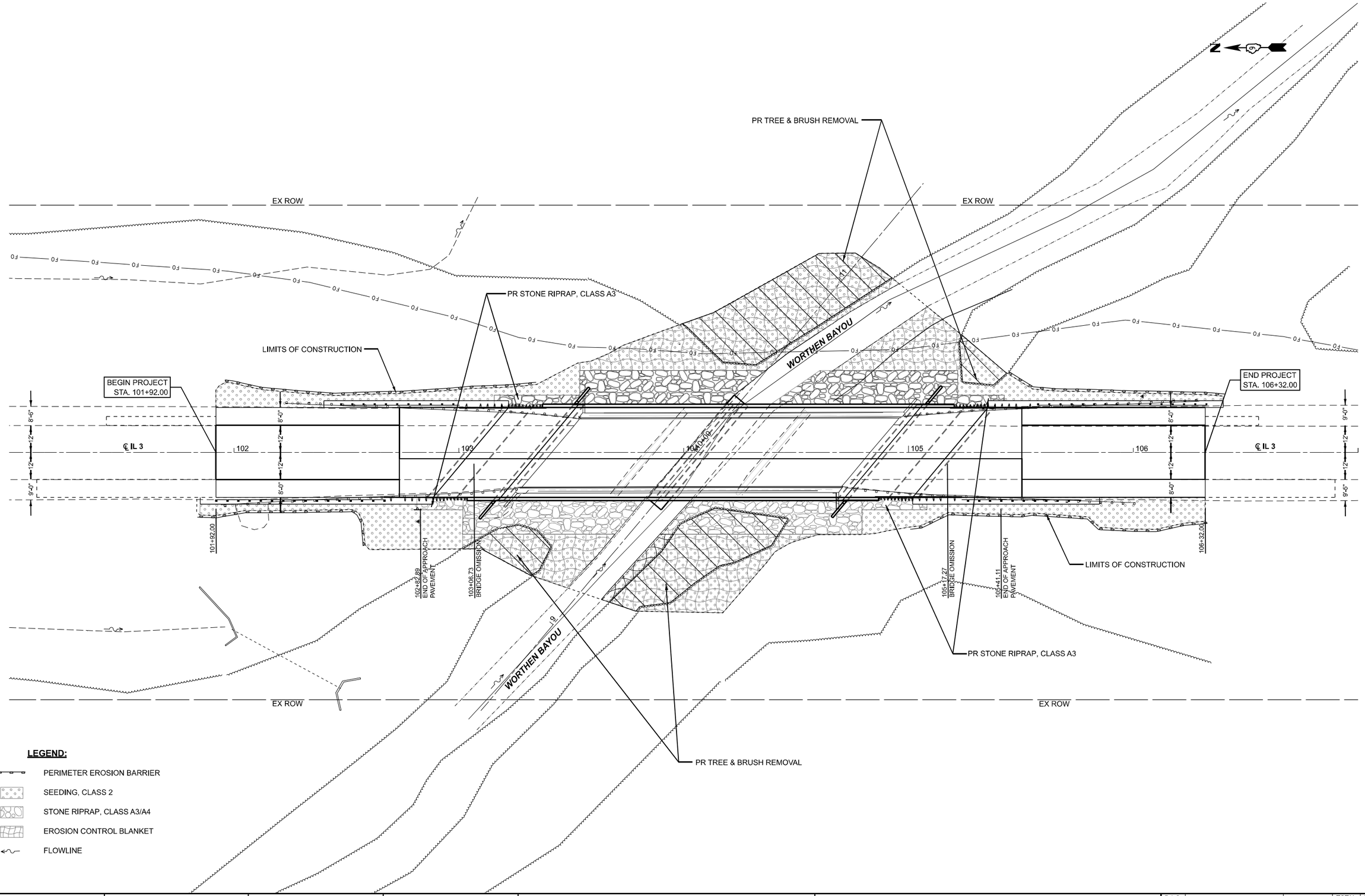

MODEL: ExCL2 - Erosion Control [Sheet]
FILE NAME: pw://bfwms-pw.bentley.com:bfwms-pw01/Documents/BFW/PROJECTS/2025 PROJECTS/23152 - IDOT D9 PTB199-038 WO#20 IL 3 Bridge Replacement/23152/IDOT/CAD_Sheets/0978967-sht-Erosion.dgn

BFW ENGINEERING & CONSULTING

USER NAME = ShelbySkinner	DESIGNED -	REVISED -
	DRAWN -	REVISED -
PLOT SCALE = $SCALE$	CHECKED -	REVISED -
PLOT DATE = 12/3/2025	DATE -	REVISED -

STATE OF ILLINOIS
DEPARTMENT OF TRANSPORTATION

EROSION CONTROL PLAN
IL 3

SCALE: 1"=20' | SHEET 1 OF 1 SHEETS | STA. 101+00.00 TO STA. 107+00.00

F.A.P. RTE.	SECTION	COUNTY	TOTAL SHEETS	SHEET NO.
312	130B-1	JACKSON	83	70

CONTRACT NO. 78967

ILLINOIS | FED. AID PROJECT

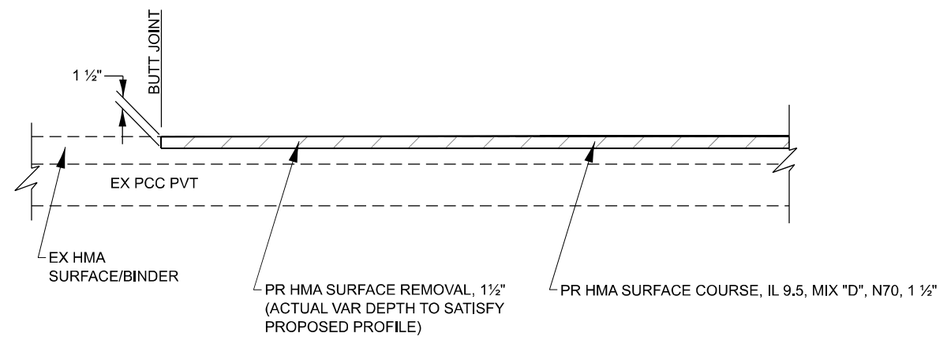

PR HMA BUTT JOINT

IL 3
STA 101+92.00
STA 102+73.58 - BUTT JT AT PCC PAVT CONN.
STA 105+50.42 - BUTT JT AT PCC PAVT CONN.
STA 106+32.00

MODEL: Sheet 01
FILE NAME: pw://bfwms-pw.bentley.com:bfwms-pw01/Documents/BFW/PROJECTS/2025 PROJECTS/23152 - IDOT D9 PTB199-038 WO#2 01L 3 Bridge Replacement/23152IDOT/CAD_Sheets/0978967-sht-Details.dgn

BFW ENGINEERING & CONSULTING	USER NAME = sskinner	DESIGNED -	REVISED -	STATE OF ILLINOIS DEPARTMENT OF TRANSPORTATION	HMA BUTT JOINT	F.A.P. RTE.	SECTION	COUNTY	TOTAL SHEETS	SHEET NO.
		DRAWN -	REVISED -			312	130B-1	JACKSON	83	71
	PLOT SCALE = 0.1667 ' / in.	CHECKED -	REVISED -					CONTRACT NO. 78967		
	PLOT DATE = 11/12/2025	DATE -	REVISED -		SCALE: SHEET 1 OF 1 SHEETS STA. TO STA.		ILLINOIS	FED. AID PROJECT		

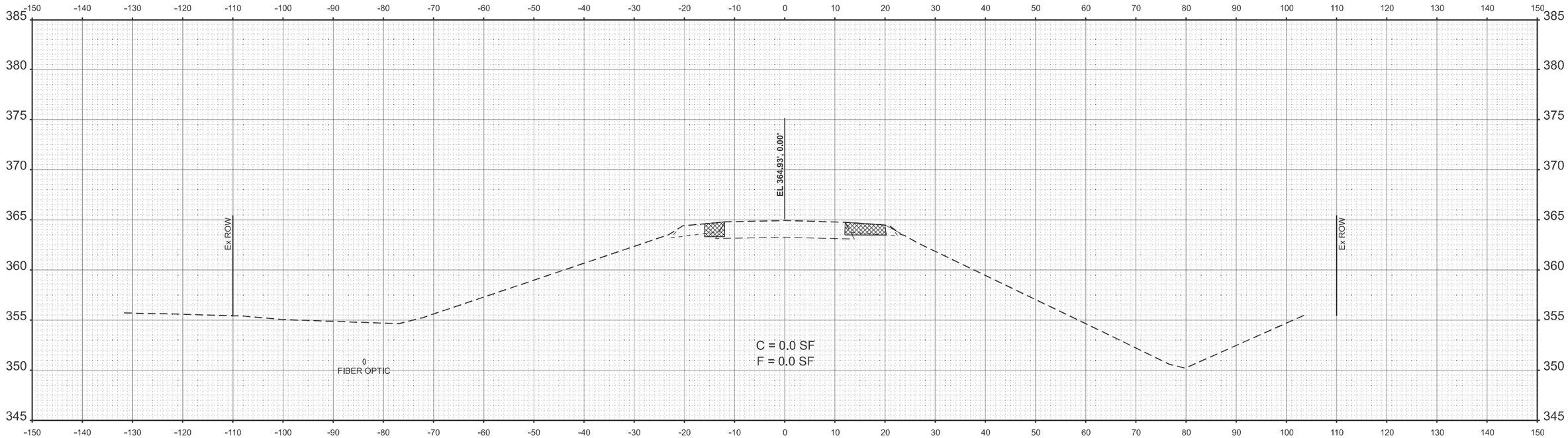

STA 101+50.00

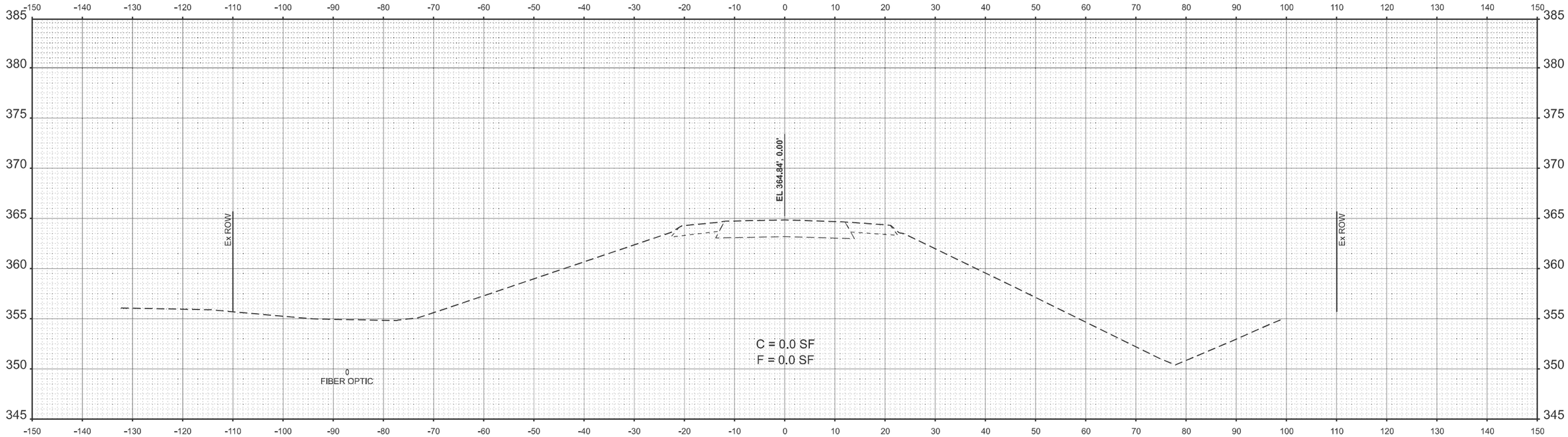

STA 101+00.00

MODEL: ExCL - 101+00.00
FILE NAME: pw://bfwms-pw.bentley.com:bfwms-pw-01\Documents\BFW\PROJECTS\2025 PROJECTS\25152 - IDOT D9 PTB199-038 WO#20 IL 3 Bridge Replacement\25152IDOT\CAD_Sheets\D978967-plt-XS-Mainline.dgn

BFW ENGINEERING & CONSULTING

USER NAME = ShelbySkinner	DESIGNED -	REVISED -	
	DRAWN -	REVISED -	
PLOT SCALE = $SCALE$	CHECKED -	REVISED -	
PLOT DATE = 11/26/2025	DATE -	REVISED -	

STATE OF ILLINOIS
DEPARTMENT OF TRANSPORTATION

CROSS SECTIONS
IL 3

SCALE: 1"=10' | SHEET 1 OF 7 SHEETS | STA. 101+00.00 TO STA. 101+50.00

F.A.P. RTE.	SECTION	COUNTY	TOTAL SHEETS	SHEET NO.
312	130B-1	JACKSON	83	72

CONTRACT NO. 78967

ILLINOIS | FED. AID PROJECT

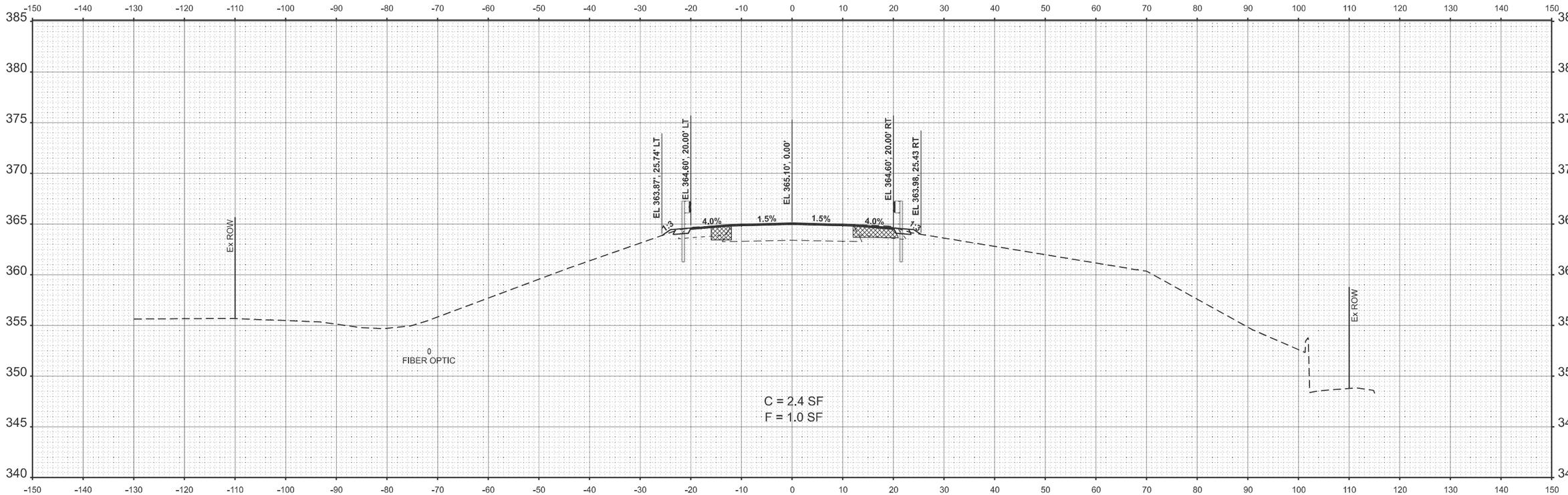

STA 102+50.00

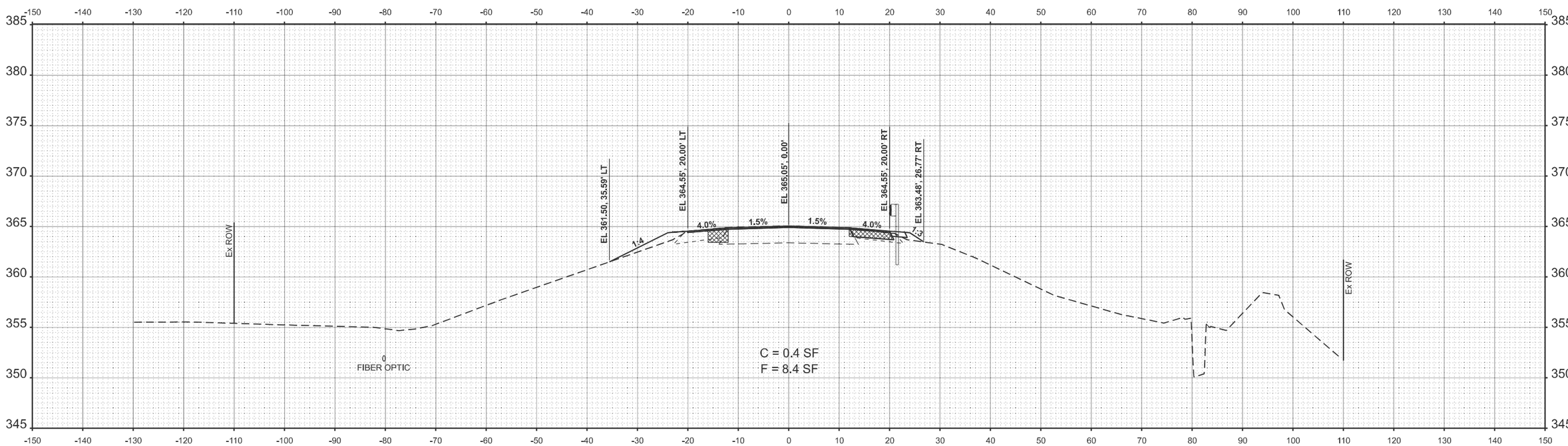

STA 102+00.00

MODEL: ExCL - 102+00.00
FILE NAME: pw://bfwms-pw.bentley.com:bfwms-pw-01\Documents\BFW\PROJECTS\2025 PROJECTS\25152 - IDOT D9 PTB199-038 WO#20 IL 3 Bridge Replacement\25152IDOT\CAD_Sheets\D978967-sht-XS-Mainline.dgn

BFW ENGINEERING & CONSULTING	USER NAME = ShelbySkinner	DESIGNED -	REVISED -	STATE OF ILLINOIS DEPARTMENT OF TRANSPORTATION	CROSS SECTIONS IL 3			F.A.P. RTE.	SECTION	COUNTY	TOTAL SHEETS	SHEET NO.
		DRAWN -	REVISED -					312	130B-1	JACKSON	83	73
	PLOT SCALE = $SCALE$	CHECKED -	REVISED -							CONTRACT NO. 78967		
	PLOT DATE = 11/26/2025	DATE -	REVISED -		SCALE: 1"=10'	SHEET 2 OF 7 SHEETS	STA. 102+00.00 TO STA. 102+50.00		ILLINOIS	FED. AID PROJECT		

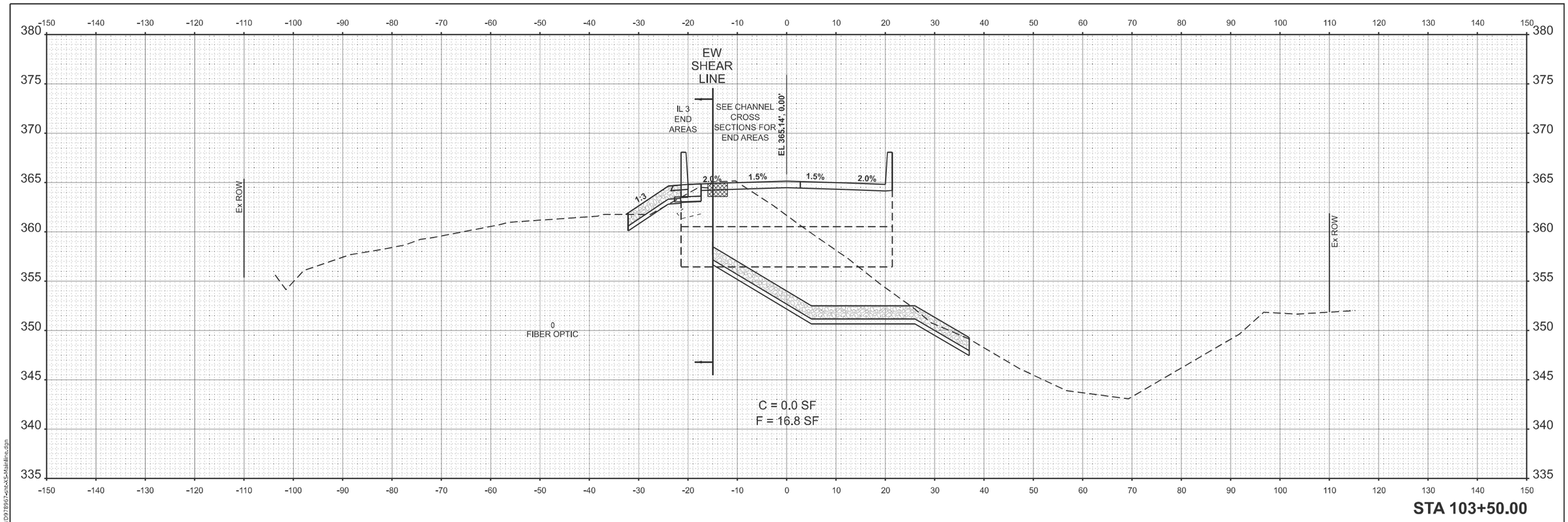

STA 103+50.00

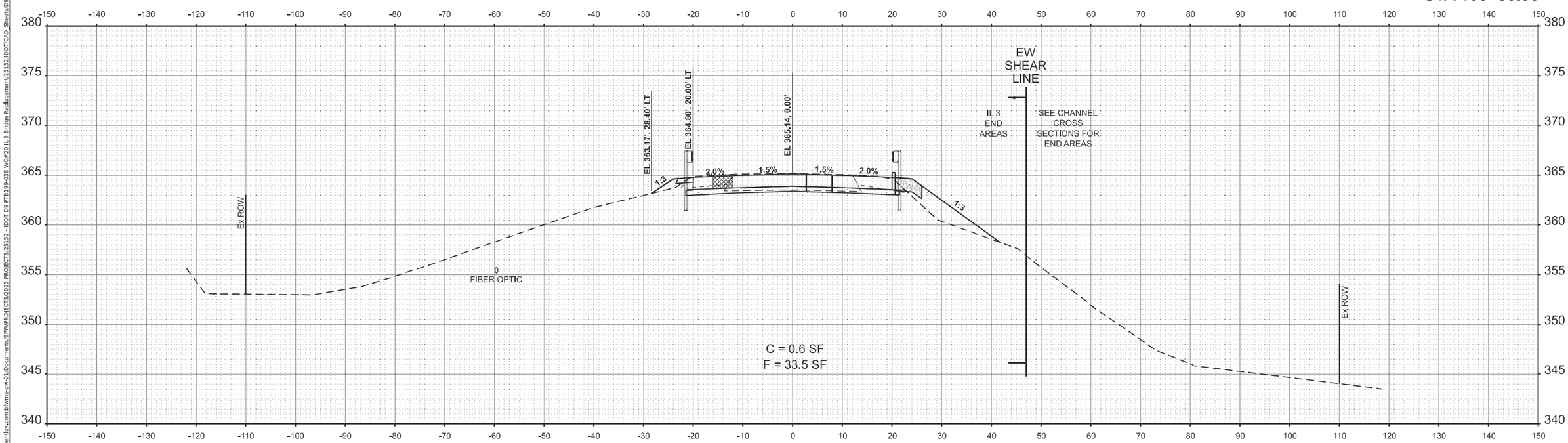

STA 103+00.00

MODEL: ExCL - 103+00.00
FILE NAME: pw://bfwms-pw.bentley.com:bfwms-pw-01\Documents\BFW\PROJECTS\2025 PROJECTS\25152 - IDOT D9 PTB199-038 WO#20 IL 3 Bridge Replacement\25152IDOT\CAD_Sheets\D978967-sht-XS-Mainline.dgn

BFW ENGINEERING & CONSULTING	USER NAME = ShelbySkinner	DESIGNED -	REVISED -	STATE OF ILLINOIS DEPARTMENT OF TRANSPORTATION	CROSS SECTIONS IL 3
		DRAWN -	REVISED -		
	PLOT SCALE = $SCALE$	CHECKED -	REVISED -		
	PLOT DATE = 11/26/2025	DATE -	REVISED -		SCALE: 1"=10' SHEET 3 OF 7 SHEETS STA. 103+00.00 TO STA. 103+50.00

F.A.P. RTE.	SECTION	COUNTY	TOTAL SHEETS	SHEET NO.
312	130B-1	JACKSON	83	74
		CONTRACT NO. 78967		
		ILLINOIS	FED. AID PROJECT	

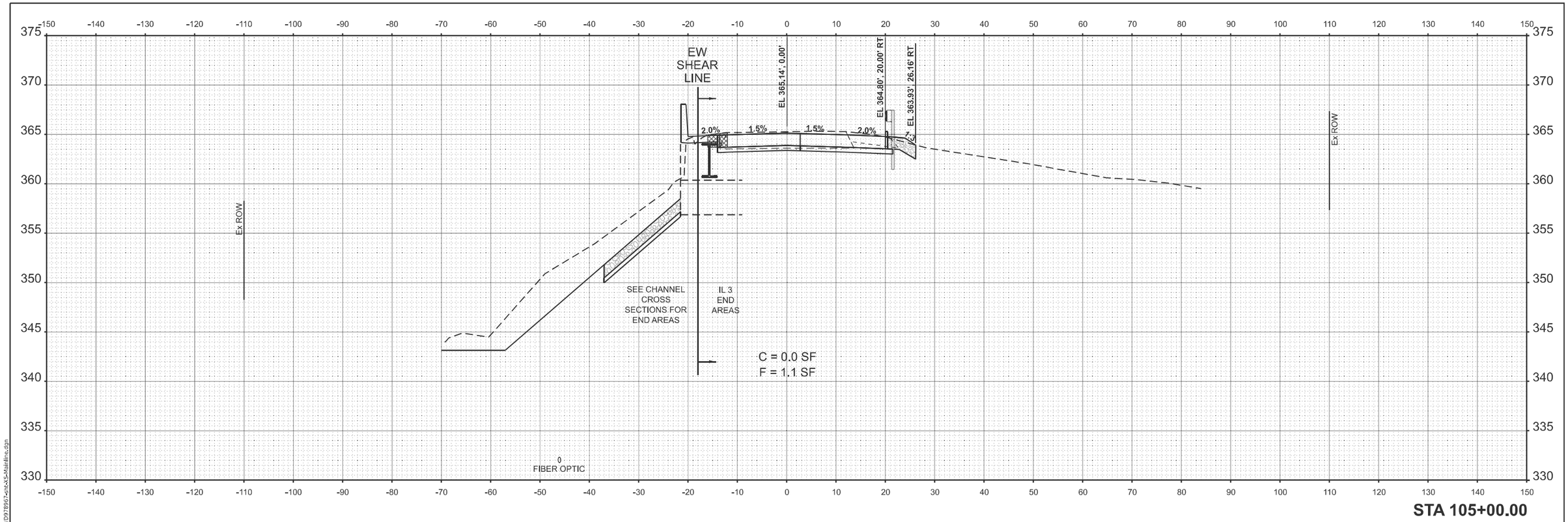

STA 105+00.00

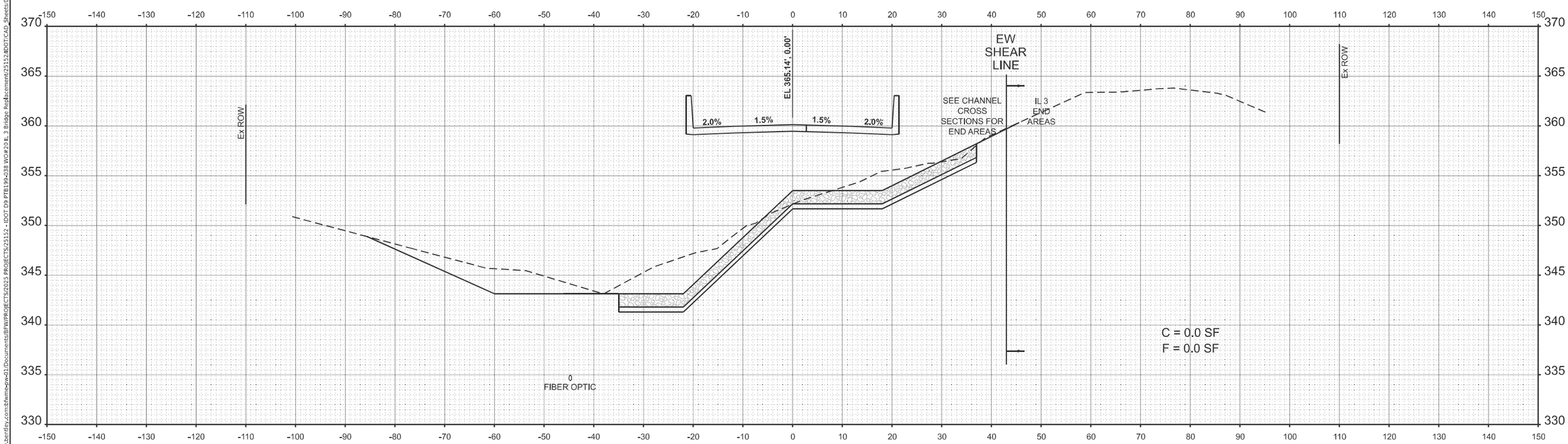

STA 104+50.00

MODEL: ExCL - 104+50.00
FILE NAME: pw://bfwms-pw.bentley.com:bfwms-pw-eu-01\Documents\BFW\PROJECTS\2025 PROJECTS\25152 - IDOT D9 PTB199-038 WO#20 IL 3 Bridge Replacement\25152IDOT\CAD_Sheets\D978967-sht-XS-Mainline.dgn

BFW ENGINEERING & CONSULTING	USER NAME = ShelbySkinner	DESIGNED -	REVISED -	STATE OF ILLINOIS DEPARTMENT OF TRANSPORTATION	CROSS SECTIONS IL 3			F.A.P. RTE.	SECTION	COUNTY	TOTAL SHEETS / SHEET NO.
		DRAWN -	REVISED -					312	130B-1	JACKSON	83 / 75
	PLOT SCALE = $SCALE$	CHECKED -	REVISED -							CONTRACT NO. 78967	
	PLOT DATE = 11/26/2025	DATE -	REVISED -		SCALE: 1"=10'	SHEET 4 OF 7 SHEETS	STA. 104+50.00 TO STA. 105+00.00			ILLINOIS FED. AID PROJECT	

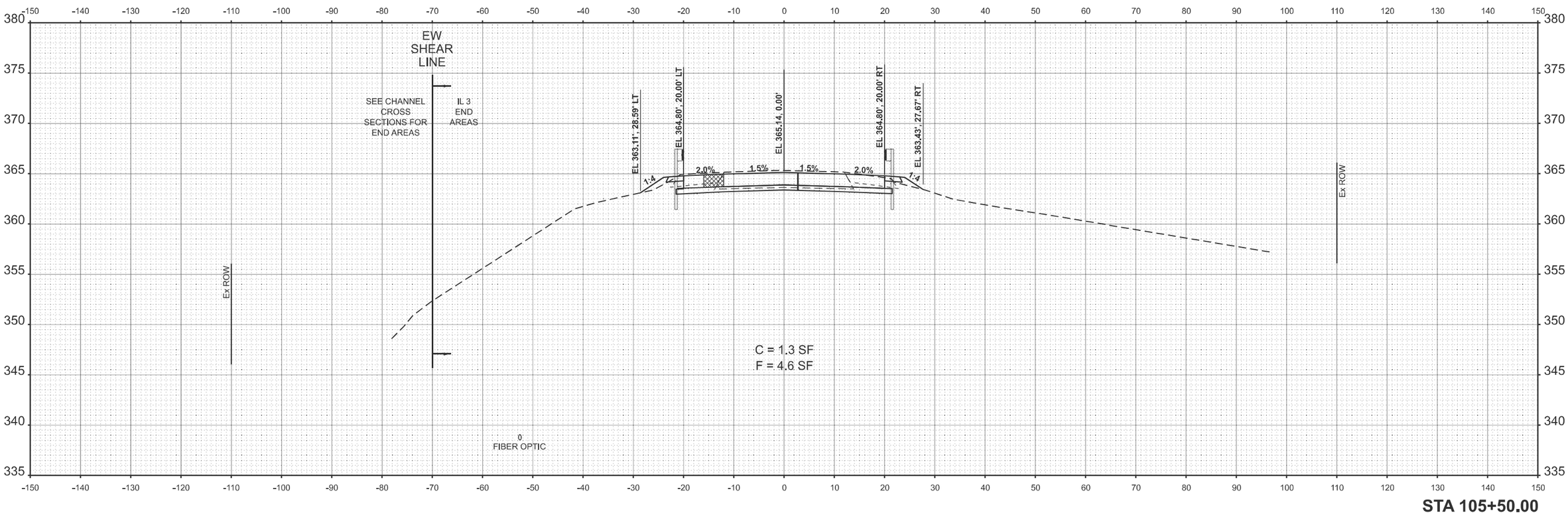

MODEL: ExCL - 105+50.00
FILE NAME: pw://bfwms-pw.bentley.com:bfwms-pw-01/Documents/BFW/PROJECTS/2023 PROJECTS/23152 - IDOT D9 PTB199-038 WO#20 IL 3 Bridge Replacement/23152/IDOT/CAD_Sheets/D978967-ctx-XS-Mainline.dgn

BFW ENGINEERING & CONSULTING

USER NAME = ShelbySkinner	DESIGNED -	REVISED -	
	DRAWN -	REVISED -	
PLOT SCALE = $SCALE$	CHECKED -	REVISED -	
PLOT DATE = 11/26/2025	DATE -	REVISED -	

STATE OF ILLINOIS
DEPARTMENT OF TRANSPORTATION

CROSS SECTIONS
IL 3

SCALE: 1"=10' | SHEET 5 OF 7 SHEETS | STA. 105+50.00 TO STA. 105+50.00

F.A.P. RTE.	SECTION	COUNTY	TOTAL SHEETS	SHEET NO.
312	130B-1	JACKSON	83	76
		CONTRACT NO. 78967		
		ILLINOIS	FED. AID PROJECT	

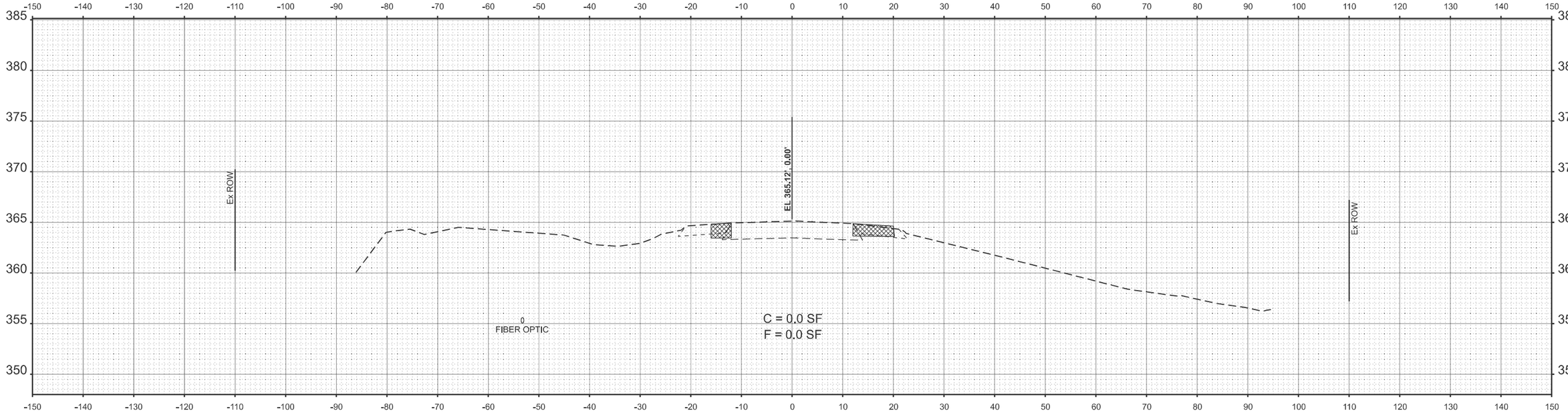

STA 106+50.00

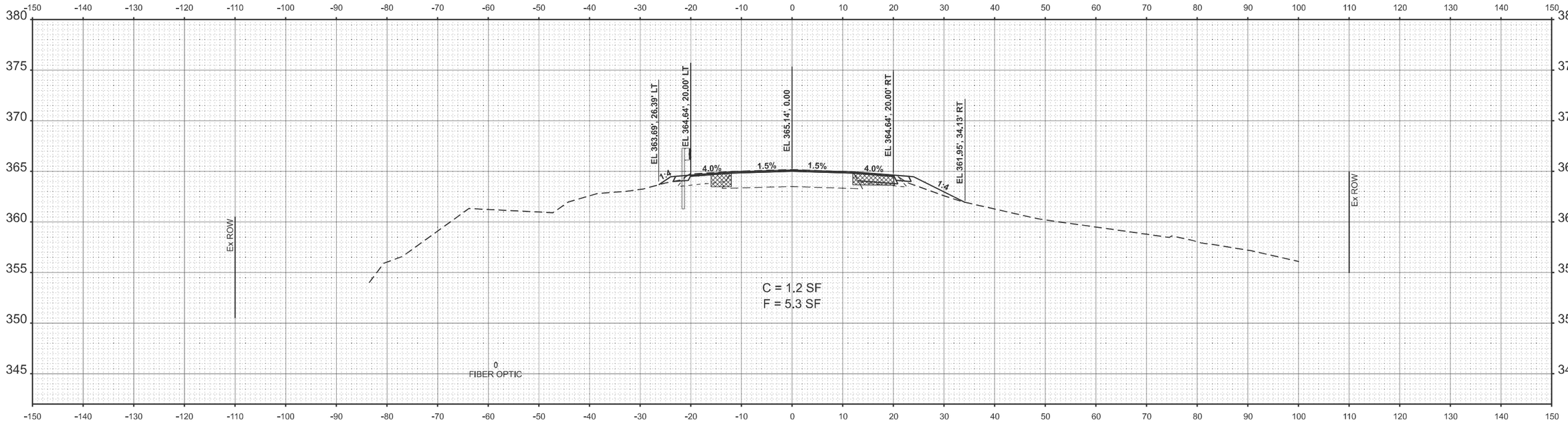

STA 106+00.00

MODEL: ExCL - 106+00.00
FILE NAME: pw://bfwms-pw.bentley.com:bfwms-pw01/Documents/BFW/PROJECTS/2025 PROJECTS/25152 - IDOT D9 PTB199-038 WO#20 IL 3 Bridge Replacement/25152IDOT/CAD_Sheets/D978967-pln-XS-Mainline.dgn

BFW ENGINEERING & CONSULTING	USER NAME = ShelbySkinner	DESIGNED -	REVISED -	STATE OF ILLINOIS DEPARTMENT OF TRANSPORTATION	CROSS SECTIONS IL 3			F.A.P. RTE.	SECTION	COUNTY	TOTAL SHEETS / SHEET NO.
		DRAWN -	REVISED -					312	130B-1	JACKSON	83 / 77
	PLOT SCALE = $SCALE$	CHECKED -	REVISED -							CONTRACT NO. 78967	
	PLOT DATE = 11/26/2025	DATE -	REVISED -		SCALE: 1"=10'	SHEET 6 OF 7 SHEETS	STA. 106+00.00 TO STA. 106+50.00		ILLINOIS	FED. AID PROJECT	

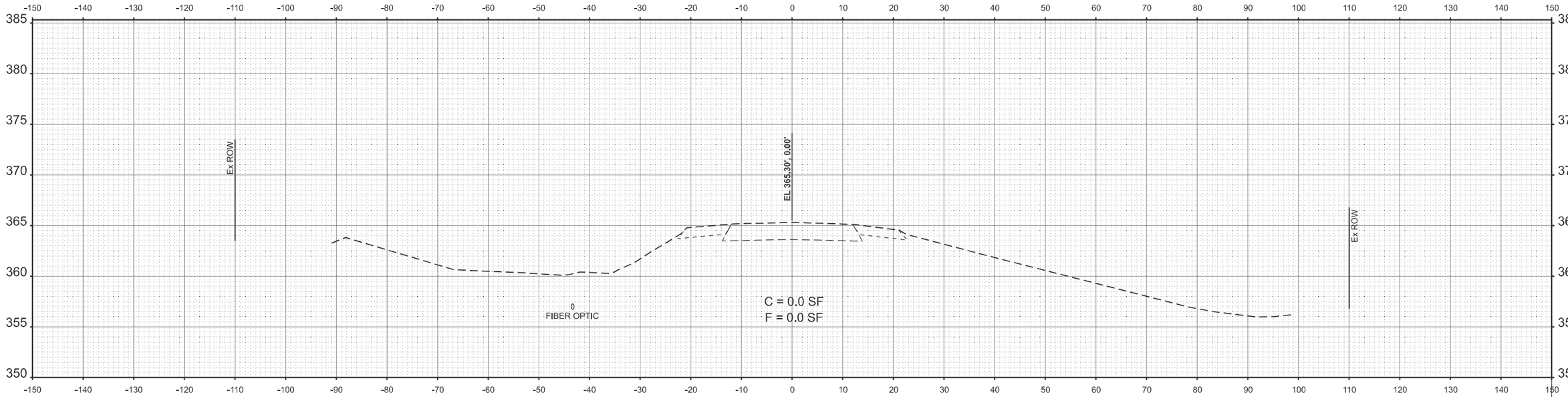

STA 107+50.00

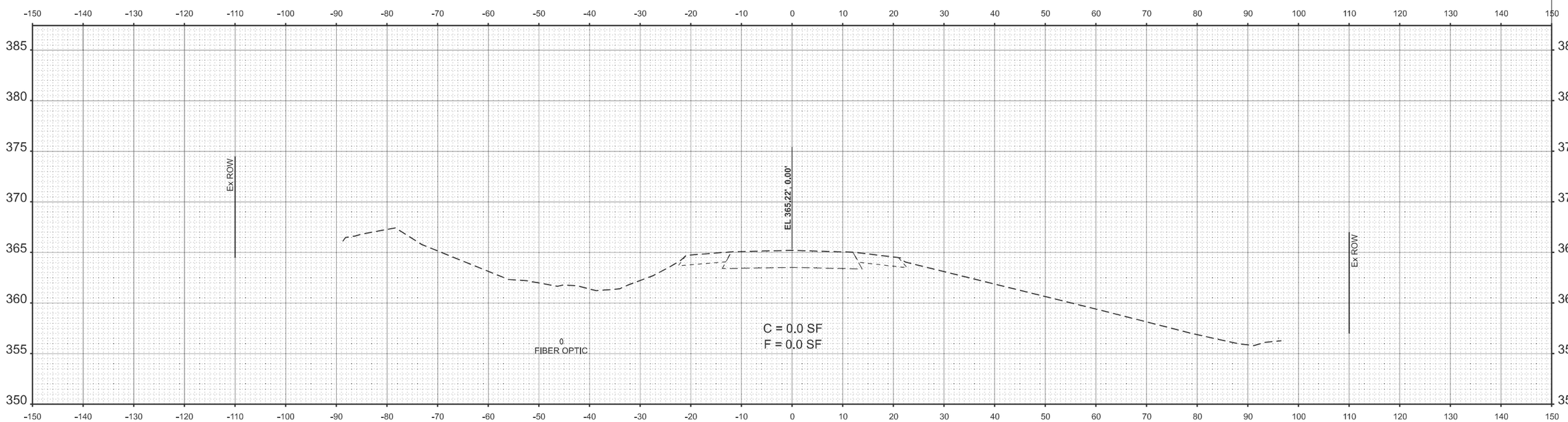

STA 107+00.00

MODEL: ExCL - 107+00.00
FILE NAME: pw://bfwms-pw.bentley.com:bfwms-pw-01\Documents\BFW\PROJECTS\2025 PROJECTS\25152 - IDOT D9 PTB199-038 WO#20 IL 3 Bridge Replacement\25152IDOT\CAD_Sheets\D978967-sht-XS-Mainline.dgn

BFW ENGINEERING & CONSULTING	USER NAME = ShelbySkinner	DESIGNED -	REVISED -	STATE OF ILLINOIS DEPARTMENT OF TRANSPORTATION	CROSS SECTIONS IL 3			F.A.P. RTE.	SECTION	COUNTY	TOTAL SHEETS / SHEET NO.
		DRAWN -	REVISED -					312	130B-1	JACKSON	83 / 78
	PLOT SCALE = $SCALE$	CHECKED -	REVISED -							CONTRACT NO. 78967	
	PLOT DATE = 11/26/2025	DATE -	REVISED -		SCALE: 1"=10'	SHEET 7 OF 7 SHEETS	STA. 107+00.00 TO STA. 107+50.00			ILLINOIS FED. AID PROJECT	

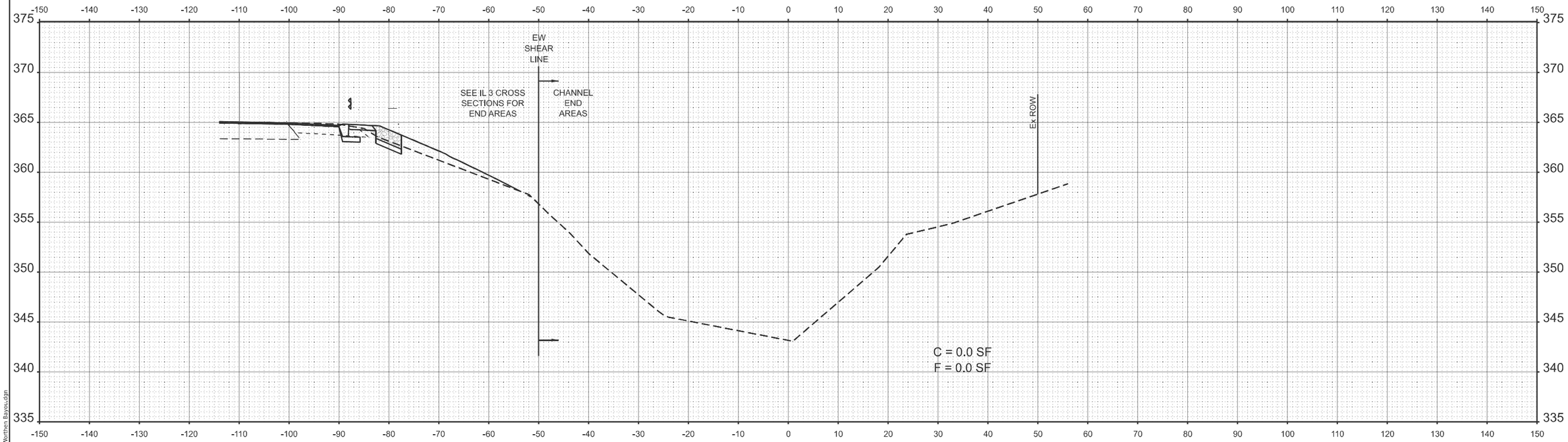

STA 9+00.00

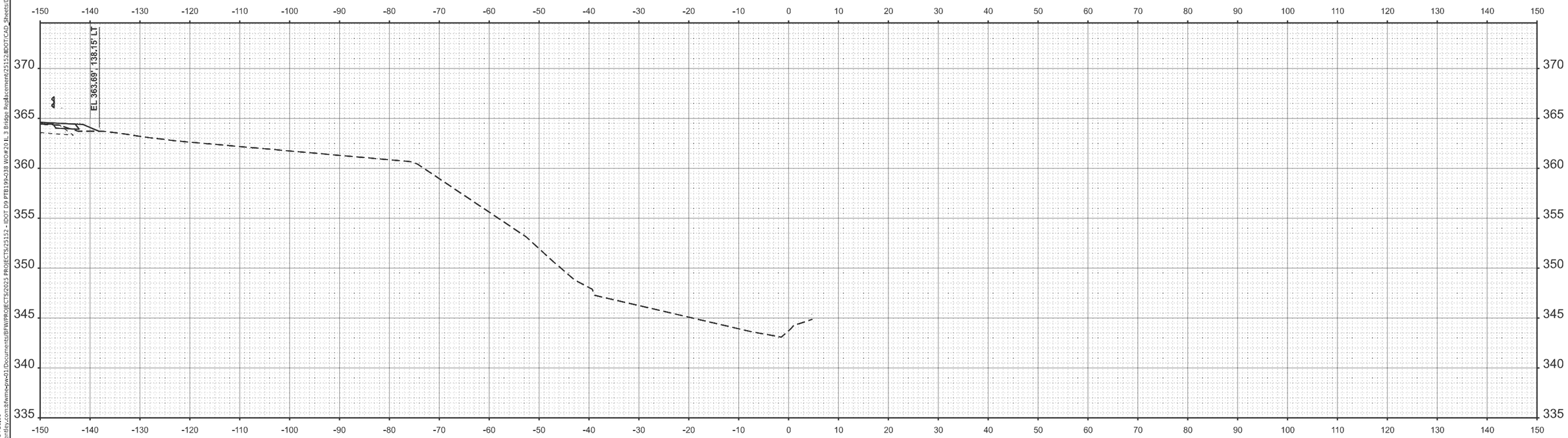

STA 8+50.00

MODEL: WORTHEN BAYOU-1 - 8+50.00
FILE NAME: pw://bfwms-pw.bentley.com:bfwms-pw-01\Documents\BFW\PROJECTS\2025 PROJECTS\25152 - IDOT D9 PTB199-038 WO#20 IL 3 Bridge Replacement\25152IDOT\CAD_Sheets\D978967-sht-XS-Worthen Bayou.dgn

BFW ENGINEERING & CONSULTING

USER NAME = ShelbySkinner	DESIGNED -	REVISED -
	DRAWN -	REVISED -
PLOT SCALE = $SCALE$	CHECKED -	REVISED -
PLOT DATE = 11/26/2025	DATE -	REVISED -

STATE OF ILLINOIS
DEPARTMENT OF TRANSPORTATION

CROSS SECTIONS
WORTHEN BAYOU

SCALE: 1"=10' | SHEET 1 OF 5 SHEETS | STA. | TO STA.

F.A.P. RTE.	SECTION	COUNTY	TOTAL SHEETS	SHEET NO.
312	130B-1	JACKSON	83	79

CONTRACT NO. 78967

ILLINOIS | FED. AID PROJECT

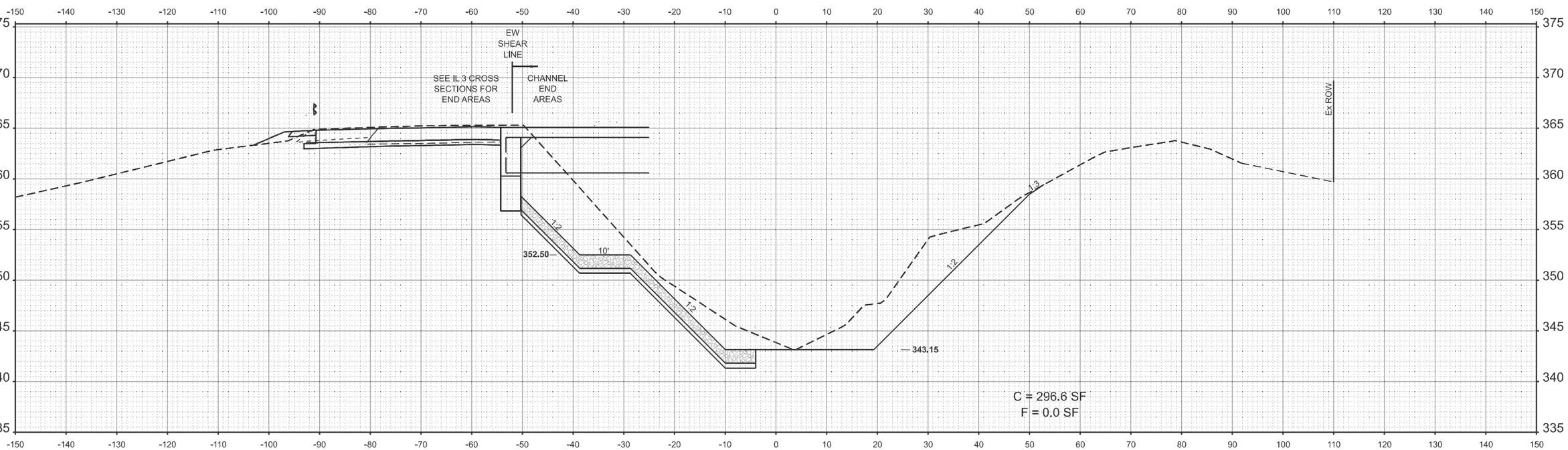

STA 9+50.00

MODEL: WORTHEN BAYOU-1 - 9+50.00
FILE NAME: pw://bfwms-pw.bentley.com:bfwms-pw-01/Documents/BFW/PROJECTS/2023 PROJECTS/23152 - IDOT D9 PTB199-038 WO#20 IL 3 Bridge Replacement/23152/IDOT/CAD Sheets/D978967-sht-XS-Worthen Bayou.dgn

BFW ENGINEERING & CONSULTING

USER NAME = ShelbySkinner	DESIGNED -	REVISED -	
	DRAWN -	REVISED -	
PLOT SCALE = $SCALE$	CHECKED -	REVISED -	
PLOT DATE = 11/26/2025	DATE -	REVISED -	

STATE OF ILLINOIS
DEPARTMENT OF TRANSPORTATION

CROSS SECTIONS
WORTHEN BAYOU

SCALE: 1"=10' | SHEET 2 OF 5 SHEETS | STA. | TO STA.

F.A.P. RTE.	SECTION	COUNTY	TOTAL SHEETS	SHEET NO.
312	130B-1	JACKSON	83	80
		CONTRACT NO. 78967		
		ILLINOIS	FED. AID PROJECT	

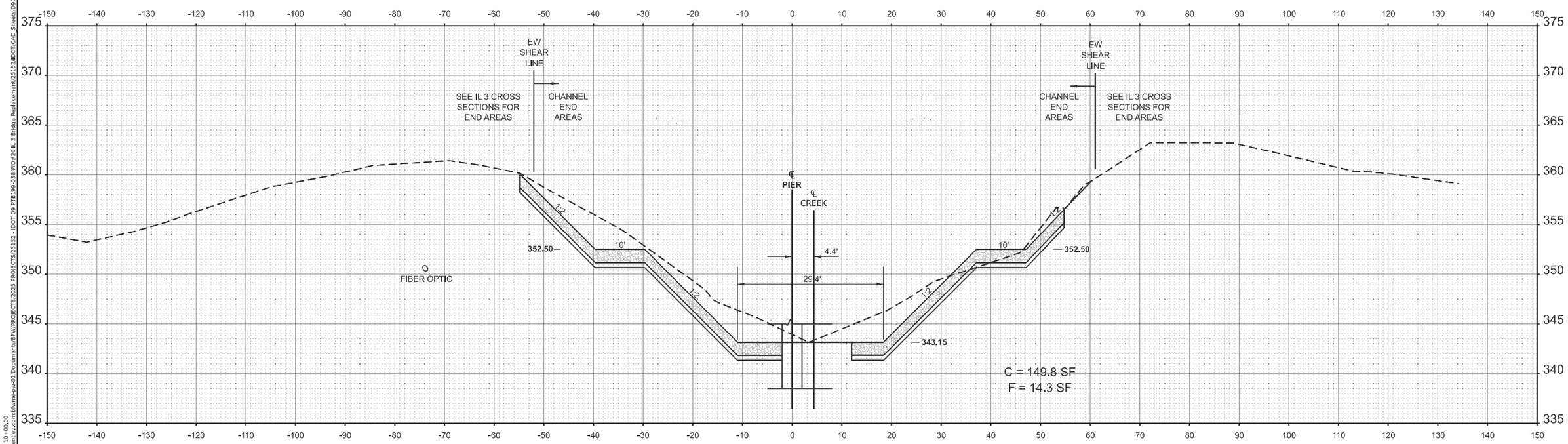

MODEL: WORTHEN BAYOU-1 - 10+00.00
FILE NAME: pw://bfwms-pw.bentley.com:bfwms-pw-01/Documents/BFW/PROJECTS/2025 PROJECTS/25132 - IDOT D9 PTB199-038 WO#20 IL 3 Bridge Replacement/25132IDOT/CAD_Sheets/D978967-sht-XS-Worthen Bayou.dgn

BFW ENGINEERING & CONSULTING

USER NAME = ShelbySkinner	DESIGNED -	REVISED -	
	DRAWN -	REVISED -	
PLOT SCALE = $SCALE$	CHECKED -	REVISED -	
PLOT DATE = 11/26/2025	DATE -	REVISED -	

STATE OF ILLINOIS
DEPARTMENT OF TRANSPORTATION

CROSS SECTIONS
WORTHEN BAYOU

SCALE: 1"=10' | SHEET 3 OF 5 SHEETS | STA. | TO STA.

F.A.P. RTE.	SECTION	COUNTY	TOTAL SHEETS	SHEET NO.
312	130B-1	JACKSON	83	81

CONTRACT NO. 78967

ILLINOIS | FED. AID PROJECT

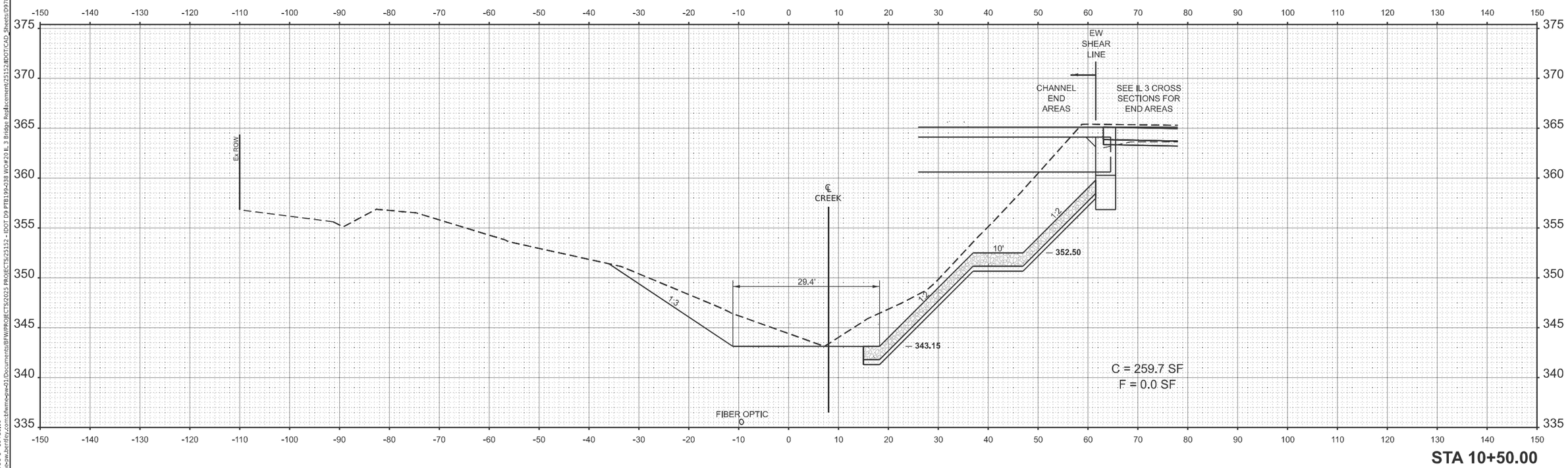

STA 10+50.00

MODEL: WORTHEN BAYOU-1 - 10+50.00
FILE NAME: pw://bfwms-pw.bentley.com:bfwms-pw-01/Documents/BFW/PROJECTS/2025 PROJECTS/23152 - IDOT D9 PTB199-038 WO#20 IL 3 Bridge Replacement/23152/IDOT/CAD Sheets/D97896 7-sht-XS-Worthen Bayou.dgn

BFW ENGINEERING & CONSULTING

USER NAME = ShelbySkinner	DESIGNED -	REVISED -	
	DRAWN -	REVISED -	
PLOT SCALE = $SCALE$	CHECKED -	REVISED -	
PLOT DATE = 11/26/2025	DATE -	REVISED -	

STATE OF ILLINOIS
DEPARTMENT OF TRANSPORTATION

CROSS SECTIONS
WORTHEN BAYOU

SCALE: 1"=10' | SHEET 4 OF 5 SHEETS | STA. | TO STA.

F.A.P. RTE.	SECTION	COUNTY	TOTAL SHEETS	SHEET NO.
312	130B-1	JACKSON	83	82
		CONTRACT NO. 78967		
		ILLINOIS	FED. AID PROJECT	

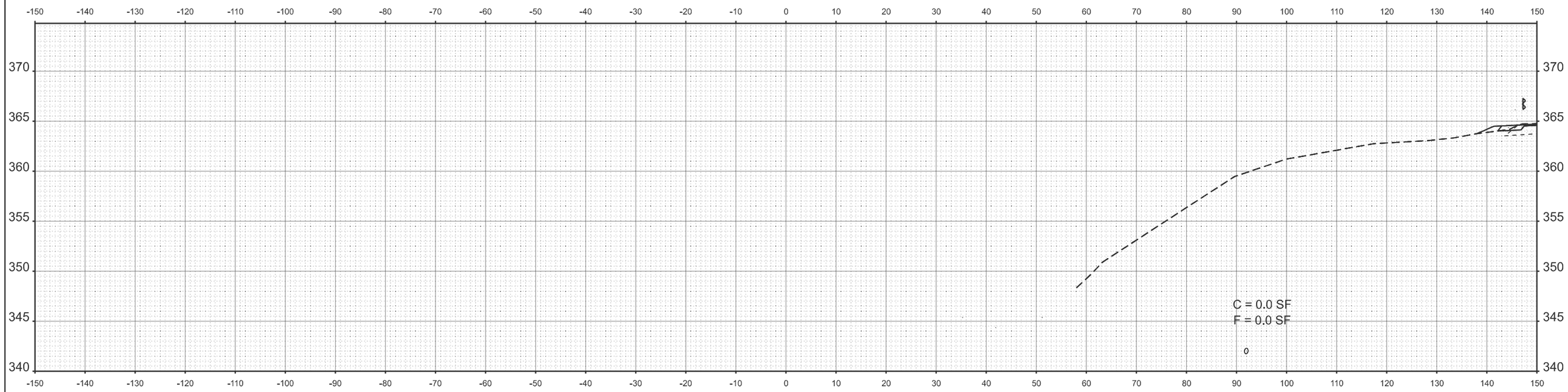

STA 11+50.00

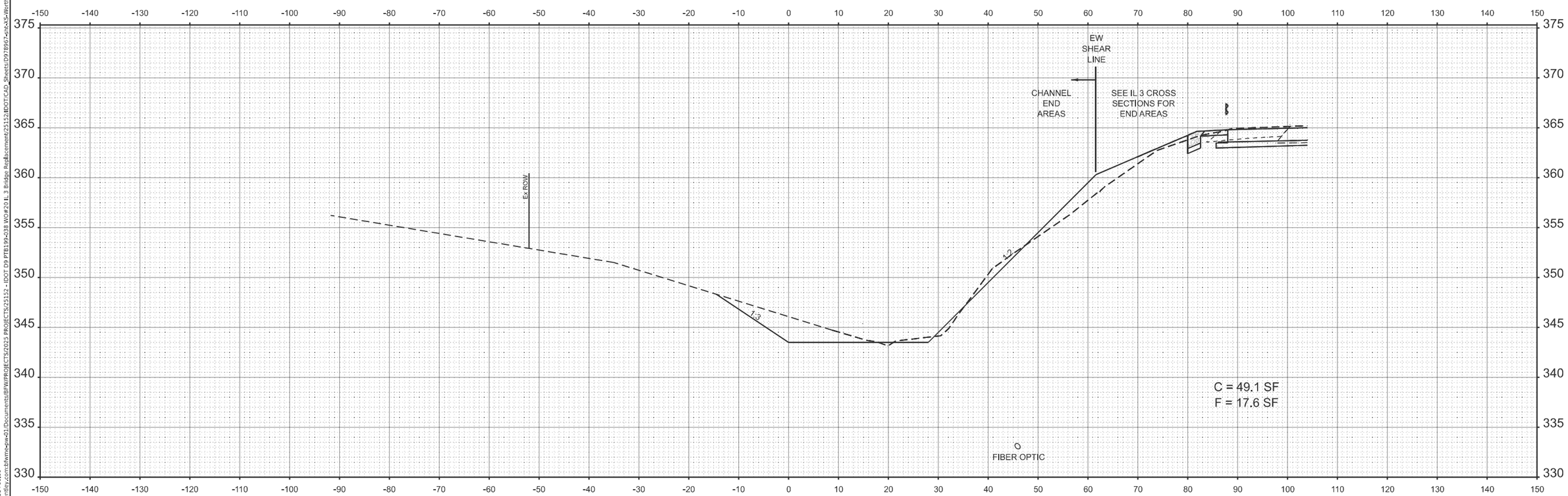

STA 11+00.00

MODEL: WORTHEN BAYOU-1 - 11+00.00
FILE NAME: pw://bhwmc-pw.bentley.com:bhwmc-pw-01/Documents/BFW/PROJECTS/2023 PROJECTS/23152 - IDOT D9 PTB199-038 WO#20 IL 3 Bridge Replacement/23152/IDOT/CAD Sheets/D978967-sht-XS-Worthen Bayou.dgn

BFW ENGINEERING & CONSULTING	USER NAME = ShelbySkinner	DESIGNED -	REVISED -	STATE OF ILLINOIS DEPARTMENT OF TRANSPORTATION	CROSS SECTIONS WORTHEN BAYOU	F.A.P. RTE. 312	SECTION 130B-1	COUNTY JACKSON	TOTAL SHEETS 83 / SHEET NO. 83
		DRAWN -	REVISED -					CONTRACT NO. 78967	
	PLOT SCALE = $SCALE$	CHECKED -	REVISED -		SCALE: 1"=10' / SHEET 5 OF 5 SHEETS / STA. TO STA.		ILLINOIS	FED. AID PROJECT	
	PLOT DATE = 11/26/2025	DATE -	REVISED -						