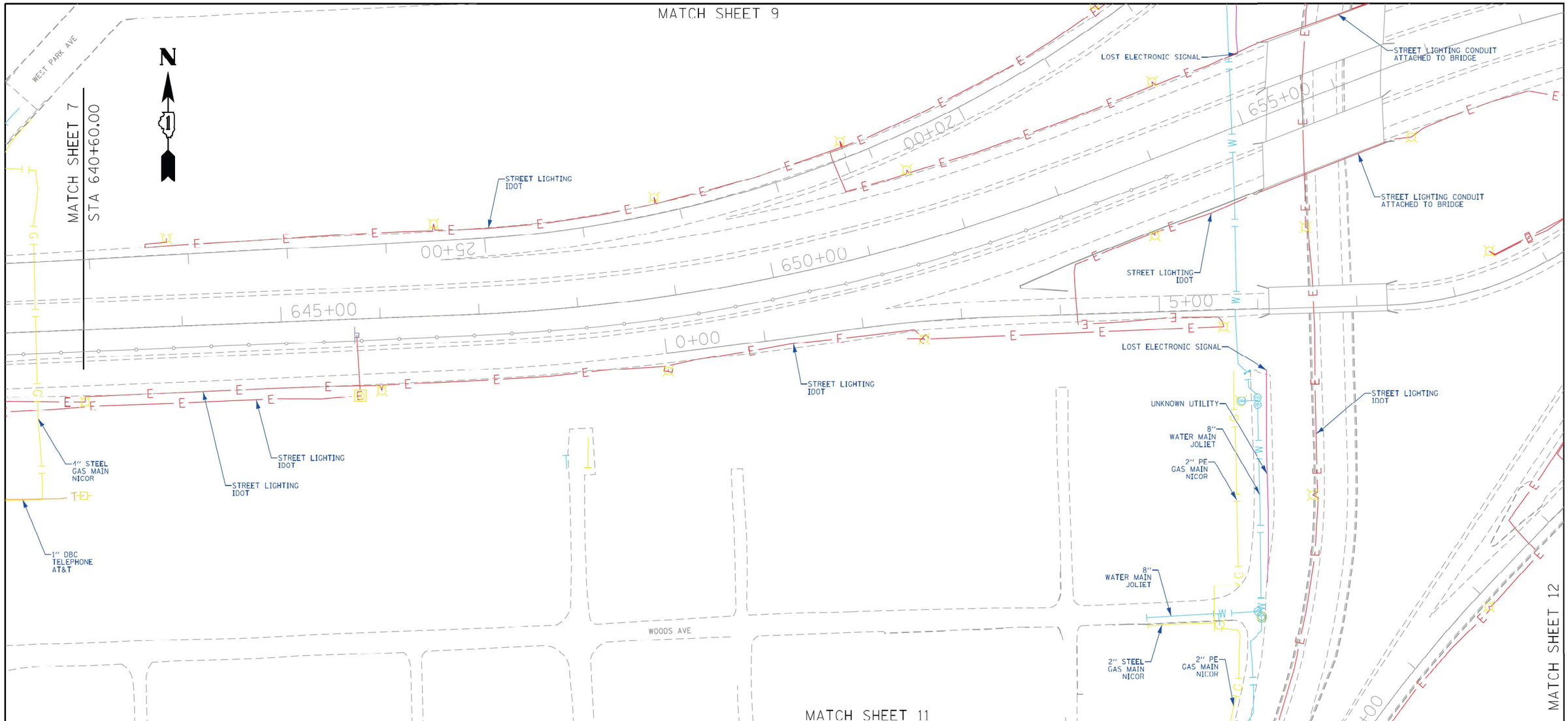

ASCE STANDARDS OF DEPICTION OF SUBSURFACE UTILITIES

QUALITY LEVEL A (QLA)
PRECISE HORIZONTAL AND VERTICAL LOCATION OF UTILITIES OBTAINED BY THE ACTUAL EXPOSURE (OR VERIFICATION OF PREVIOUSLY EXPOSED AND SURVEYED UTILITIES) USING MINIMALLY INTRUSIVE EXCAVATION EQUIPMENT TO MINIMIZE POTENTIAL FOR UTILITY DAMAGE, AND SUBSEQUENT MEASURMENT OF THE SUBSURFACE UTILITIES WITH OTHER UTILITY ATTRIBUTES SUCH AS TYPE, SIZE & MATERIAL OF UTILITY.

QUALITY LEVEL B (QLB)
INFORMATION OBTAINED THROUGH THE APPLICATION OF APPROPRIATE SURFACE GEOPHYSICAL METHODS TO DETERMINE THE EXISTENCE AND APPROXIMATE HORIZONTAL POSITION OF SUBSURFACE UTILTIES. QUALITY LEVEL B DATA SHOULD BE REPRODUCIBLE BY SURFACE GEOPHYSICS AT ANY POINT OF THEIR DEPICTION. THIS INFORMATION IS SURVEYED TO APPLICABLE TOLERANCES DEFINED BY THE PROJECT AND REDUCED ONTO PLAN DOCUMENTS.

QUALITY LEVEL C (QLC)
INFORMATION OBTAINED BY SURVEYING AND PLOTTING VISIBLE ABOVE-GROUND UTLITY FEATURES AND BY USING PROFESSIONAL JUDGEMENT IN CORRELATING THIS INFORMATION TO QUALITY LEVEL D INFORMATION.

QUALITY LEVEL D (QLD)
INFORMATION DERIVED FROM EXISITNG RECORDS OR ORAL RECOLLECTIONS.

GENERAL NOTES:

WGI INC. HAS EXERCISED ITS BEST PROFESSIONAL EXPERTISE AND GEOPHYSICAL PROSPECTING TECHNIQUES TO DEVELOP THIS MAPPING OF SUBSURFACE UTILITIES WITHIN THE PROJECT LIMITS.

WGI INC. DOES NOT GUARANTEE THAT UTILITIES SHOWN COMPRISE ALL UTILITIES WITHIN THE PROJECT AREA.

WGI's FIELD INVESTIGATION WAS PERFORMED 10/04/19 THROUGH 03/20/20. CHANGES TO UTILITIES AFTER 03/20/20 MAY HAVE BEEN MADE AND THEREFORE MAY RESULT IN VARIANCES FROM THIS PLAN IF DEEMED ADVISABLE PRIOR TO FINAL DESIGN AND CONSTRUCTION.

FIELD LOCATED UTILITIES MEET THE FEDERAL HIGHWAY ADMINISTRATION DEFINITION FOR "QUALITY LEVEL B" (QLB) STANDARDS.

ALL UTILITIES SHOWN ARE QUALITY LEVEL B (QLB) UNLESS NOTED OTHERWISE.

ALL ELECTRONIC DEPTHS PROVIDED ARE APPROXIMATE AND SHOULD BE USED FOR INFORMATIONAL PURPOSES ONLY.

UTILITY LEGEND:

A	- AERIAL
	- UNKNOWN UTILITY
O	- OIL
CTV	- CABLE TV
T	- TELEPHONE
G	- GAS
E	- ELECTRIC
E	- TRAFFIC SIGNAL/LIGHTING
W	- WATER
	- FORCE MAIN
FO	- FIBER OPTIC
	- TEST HOLE
EOI	- END OF INFORMATION
ED	- ELECTRONIC DEPTH

JOHN J. BELLIS
062-044796
REGISTERED PROFESSIONAL ENGINEER OF ILLINOIS

John J Bellis
signature

04/06/20
date

license expires 11/30/2021

AMERICAN SURVEYING & ENGINEERING
American Surveying & Engineering, P.C.
30 N. LaSalle St., Suite 3440
Chicago, IL 60602
Phone No. (312) 277-2000

WGI
2001 Butterfield Road, Suite 410
Downers Grove, IL 60515
Phone No. (630) 307-3800
Fax No. (630) 307-7030
Cert No. 6091 - LB No. 7055

USER NAME = Erick.Maleza	DESIGNED -	REVISED -	
	DRAWN - EM	REVISED -	
PLOT SCALE = 100.0000 ' / in.	CHECKED - EG	REVISED -	
PLOT DATE = 3/26/2020	DATE -	REVISED -	

STATE OF ILLINOIS
DEPARTMENT OF TRANSPORTATION

I-80 LARKIN TO WATER ST.
JOLIET, ILLINOIS

SCALE: | SHEET 1 OF 7 SHEETS | STA. | TO STA.

F.A. RTE.	SECTION	COUNTY	TOTAL SHEETS	SHEET NO.
		WILL	1230	401
		CONTRACT NO. P-91-185-09		
		ILLINOIS	FED. AID PROJECT	

IDOT W.O. 213 & 214

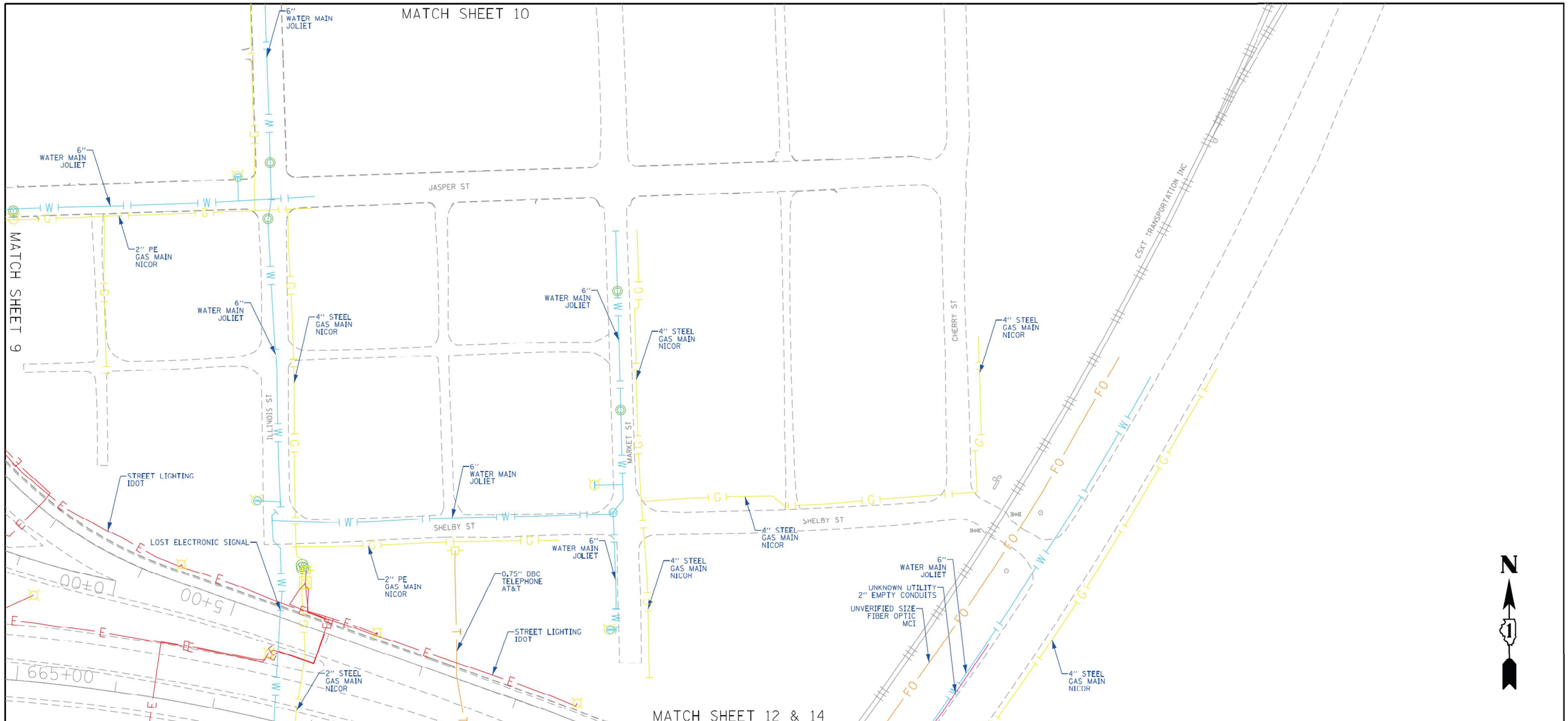

ASCE STANDARDS OF DEPICTION OF SUBSURFACE UTILITIES

QUALITY LEVEL A (QLA)
PRECISE HORIZONTAL AND VERTICAL LOCATION OF UTILITIES OBTAINED BY THE ACTUAL EXPOSURE (OR VERIFICATION OF PREVIOUSLY EXPOSED AND SURVEYED UTILITIES) USING MINIMALLY INTRUSIVE EXCAVATION EQUIPMENT TO MINIMIZE POTENTIAL FOR UTILITY DAMAGE, AND SUBSEQUENT MEASURMENT OF THE SUBSURFACE UTILITIES WITH OTHER UTILITY ATTRIBUTES SUCH AS TYPE, SIZE & MATERIAL OF UTILITY.

QUALITY LEVEL B (QLB)
INFORMATION OBTAINED THROUGH THE APPLICATION OF APPROPRIATE SURFACE GEOPHYSICAL METHODS TO DETERMINE THE EXISTENCE AND APPROXIMATE HORIZONTAL POSITION OF SUBSURFACE UTILTIES. QUALITY LEVEL B DATA SHOULD BE REPRODUCIBLE BY SURFACE GEOPHYSICS AT ANY POINT OF THEIR DEPICTION. THIS INFORMATION IS SURVEYED TO APPLICABLE TOLERANCES DEFINED BY THE PROJECT AND REDUCED ONTO PLAN DOCUMENTS.

QUALITY LEVEL C (QLC)
INFORMATION OBTAINED BY SURVEYING AND PLOTTING VISIBLE ABOVE-GROUND UTLITY FEATURES AND BY USING PROFESSIONAL JUDGEMENT IN CORRELATING THIS INFORMATION TO QUALITY LEVEL D INFORMATION.

QUALITY LEVEL D (QLD)
INFORMATION DERIVED FROM EXISITNG RECORDS OR ORAL RECOLLECTIONS.

GENERAL NOTES:

WGI INC. HAS EXERCISED ITS BEST PROFESSIONAL EXPERTISE AND GEOPHYSICAL PROSPECTING TECHNIQUES TO DEVELOP THIS MAPPING OF SUBSURFACE UTILITIES WITHIN THE PROJECT LIMITS.

WGI INC. DOES NOT GUARANTEE THAT UTILITIES SHOWN COMPRISE ALL UTILITIES WITHIN THE PROJECT AREA.

WGI's FIELD INVESTIGATION WAS PERFORMED 10/04/19 THROUGH 03/20/20. CHANGES TO UTILITIES AFTER 03/20/20 MAY HAVE BEEN MADE AND THEREFORE MAY RESULT IN VARIANCES FROM THIS PLAN IF DEEMED ADVISABLE PRIOR TO FINAL DESIGN AND CONSTRUCTION.

FIELD LOCATED UTILITIES MEET THE FEDERAL HIGHWAY ADMINISTRATION DEFINITION FOR "QUALITY LEVEL B" (QLB) STANDARDS.

ALL UTILITIES SHOWN ARE QUALITY LEVEL B (QLB) UNLESS NOTED OTHERWISE.

ALL ELECTRONIC DEPTHS PROVIDED ARE APPROXIMATE AND SHOULD BE USED FOR INFORMATIONAL PURPOSES ONLY.

UTILITY LEGEND:

A	- AERIAL
	- UNKNOWN UTILITY
O	- OIL
CTV	- CABLE TV
T	- TELEPHONE
G	- GAS
E	- ELECTRIC
E	- TRAFFIC SIGNAL/LIGHTING
W	- WATER
	- FORCE MAIN
FO	- FIBER OPTIC
	- TEST HOLE
EOI	- END OF INFORMATION
ED	- ELECTRONIC DEPTH

JOHN J. BELLIS
062-044796
REGISTERED PROFESSIONAL ENGINEER OF ILLINOIS

Signature

04/06/20
date

license expires 11/30/2021

AMERICAN SURVEYING & ENGINEERING
American Surveying & Engineering, P.C.
30 N. LaSalle St., Suite 3440
Chicago, IL 60602
Phone No. (312) 277-2000

WGI
2001 Butterfield Road, Suite 410
Downers Grove, IL 60515
Phone No. (630) 307-3800
Fax No. (630) 307-7030
Cert No. 6091 - LB No. 7055

USER NAME = Erick.Maleza	DESIGNED -	REVISED -	
	DRAWN - EM	REVISED -	
PLOT SCALE = 100.0000 ' / in.	CHECKED - EG	REVISED -	
PLOT DATE = 3/26/2020	DATE -	REVISED -	

STATE OF ILLINOIS
DEPARTMENT OF TRANSPORTATION

I-80 LARKIN TO WATER ST.
JOLIET, ILLINOIS

SCALE: | SHEET 2 OF 7 SHEETS | STA. | TO STA.

F.A. RTE.	SECTION	COUNTY	TOTAL SHEETS	SHEET NO.
		WILL	1230	402
		CONTRACT NO. P-91-185-09		
	ILLINOIS	FED. AID PROJECT		

IDOT W.O. 213 & 214

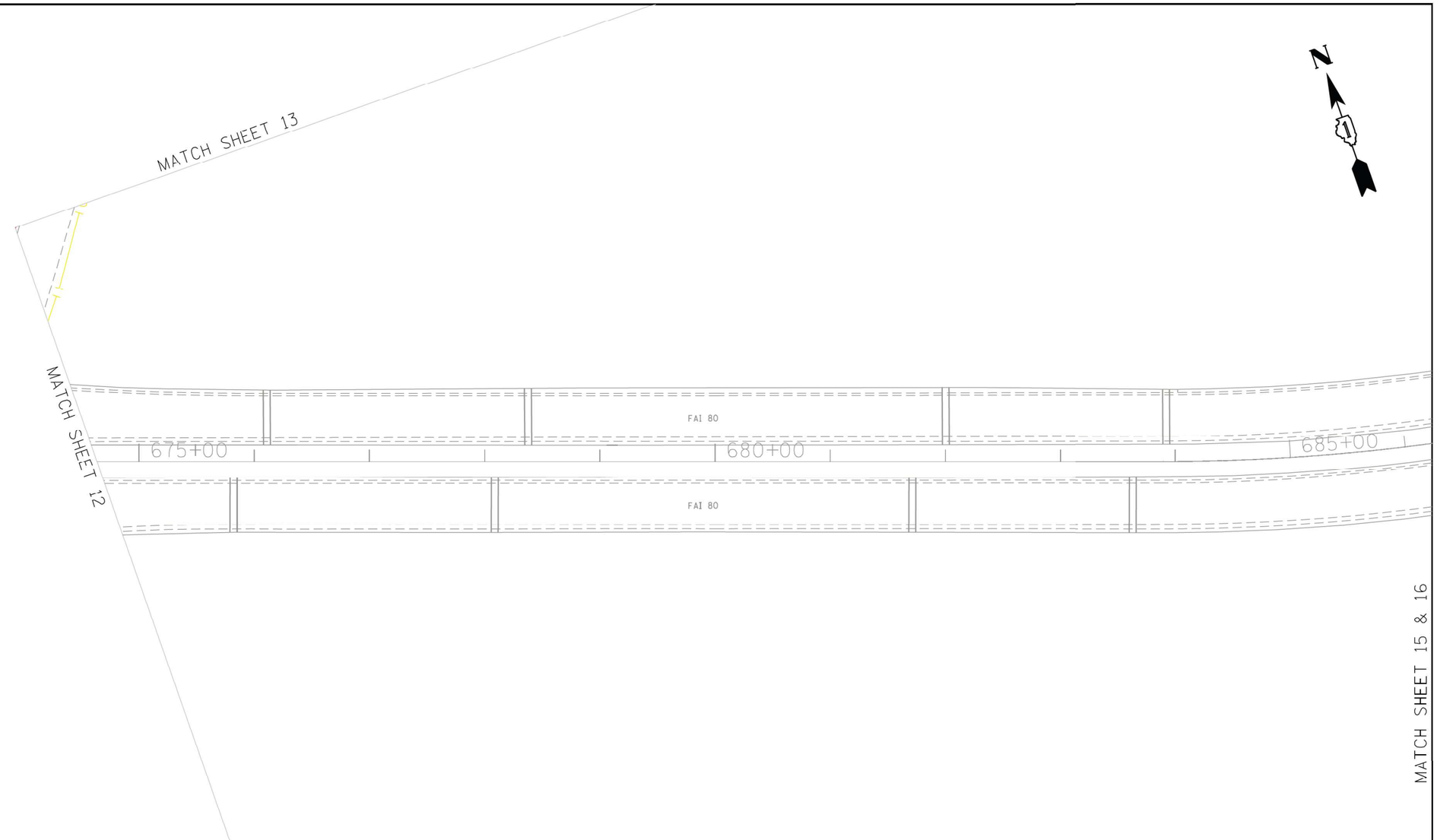

ASCE STANDARDS OF DEPICTION OF SUBSURFACE UTILITIES

QUALITY LEVEL A (QLA)
PRECISE HORIZONTAL AND VERTICAL LOCATION OF UTILITIES OBTAINED BY THE ACTUAL EXPOSURE (OR VERIFICATION OF PREVIOUSLY EXPOSED AND SURVEYED UTILITIES) USING MINIMALLY INTRUSIVE EXCAVATION EQUIPMENT TO MINIMIZE POTENTIAL FOR UTILITY DAMAGE, AND SUBSEQUENT MEASURMENT OF THE SUBSURFACE UTILITIES WITH OTHER UTILITY ATTRIBUTES SUCH AS TYPE, SIZE & MATERIAL OF UTILITY.

QUALITY LEVEL B (QLB)
INFORMATION OBTAINED THROUGH THE APPLICATION OF APPROPRIATE SURFACE GEOPHYSICAL METHODS TO DETERMINE THE EXISTENCE AND APPROXIMATE HORIZONTAL POSITION OF SUBSURFACE UTILTIES. QUALITY LEVEL B DATA SHOULD BE REPRODUCIBLE BY SURFACE GEOPHYSICS AT ANY POINT OF THEIR DEPICTION. THIS INFORMATION IS SURVEYED TO APPLICABLE TOLERANCES DEFINED BY THE PROJECT AND REDUCED ONTO PLAN DOCUMENTS.

QUALITY LEVEL C (QLC)
INFORMATION OBTAINED BY SURVEYING AND PLOTTING VISIBLE ABOVE-GROUND UTLITY FEATURES AND BY USING PROFESSIONAL JUDGEMENT IN CORRELATING THIS INFORMATION TO QUALITY LEVEL D INFORMATION.

QUALITY LEVEL D (QLD)
INFORMATION DERIVED FROM EXISITNG RECORDS OR ORAL RECOLLECTIONS.

GENERAL NOTES:

WGI INC. HAS EXERCISED ITS BEST PROFESSIONAL EXPERTISE AND GEOPHYSICAL PROSPECTING TECHNIQUES TO DEVELOP THIS MAPPING OF SUBSURFACE UTILITIES WITHIN THE PROJECT LIMITS.

WGI INC. DOES NOT GUARANTEE THAT UTILITIES SHOWN COMPRISE ALL UTILITIES WITHIN THE PROJECT AREA.

WGI's FIELD INVESTIGATION WAS PERFORMED 10/04/19 THROUGH 03/20/20. CHANGES TO UTILITIES AFTER 03/20/20 MAY HAVE BEEN MADE AND THEREFORE MAY RESULT IN VARIANCES FROM THIS PLAN IF DEEMED ADVISABLE PRIOR TO FINAL DESIGN AND CONSTRUCTION.

FIELD LOCATED UTILITIES MEET THE FEDERAL HIGHWAY ADMINISTRATION DEFINITION FOR "QUALITY LEVEL B" (QLB) STANDARDS.

ALL UTILITIES SHOWN ARE QUALITY LEVEL B (QLB) UNLESS NOTED OTHERWISE.

ALL ELECTRONIC DEPTHS PROVIDED ARE APPROXIMATE AND SHOULD BE USED FOR INFORMATIONAL PURPOSES ONLY.

UTILITY LEGEND:

- A — *AERIAL*
- *UNKNOWN UTILITY*
- O — *OIL*
- CTV — *CABLE TV*
- T — *TELEPHONE*
- G — *GAS*
- E — *ELECTRIC*
- E — *TRAFFIC SIGNAL/LIGHTING*
- W — *WATER*
- *FORCE MAIN*
- FO — *FIBER OPTIC*
- *TEST HOLE*
- EOI — *END OF INFORMATION*
- ED — *ELECTRONIC DEPTH*

JOHN J. BELLIS
062-044796
REGISTERED PROFESSIONAL ENGINEER OF ILLINOIS

signature

04/06/20
date

license expires 11/30/2021

AMERICAN SURVEYING & ENGINEERING
American Surveying & Engineering, P.C.
30 N. LaSalle St., Suite 3440
Chicago, IL 60602
Phone No. (312) 277-2000

WGI
2001 Butterfield Road, Suite 410
Downers Grove, IL 60515
Phone No. (630) 307-3800
Fax No. (630) 307-7030
Cert No. 6091 - LB No. 7055

USER NAME = Erick.Maleza	DESIGNED -	REVISED -	
	DRAWN - EM	REVISED -	
PLOT SCALE = 100.0000 ' / in.	CHECKED - EG	REVISED -	
PLOT DATE = 3/26/2020	DATE -	REVISED -	

STATE OF ILLINOIS
DEPARTMENT OF TRANSPORTATION

I-80 LARKIN TO WATER ST.
JOLIET, ILLINOIS

SCALE: | SHEET 3 OF 7 SHEETS | STA. TO STA.

F.A. RTE.	SECTION	COUNTY	TOTAL SHEETS	SHEET NO.
		WILL	1230	403
		CONTRACT NO. P-91-185-09		
		ILLINOIS	FED. AID PROJECT	

IDOT W.O. 213 & 214

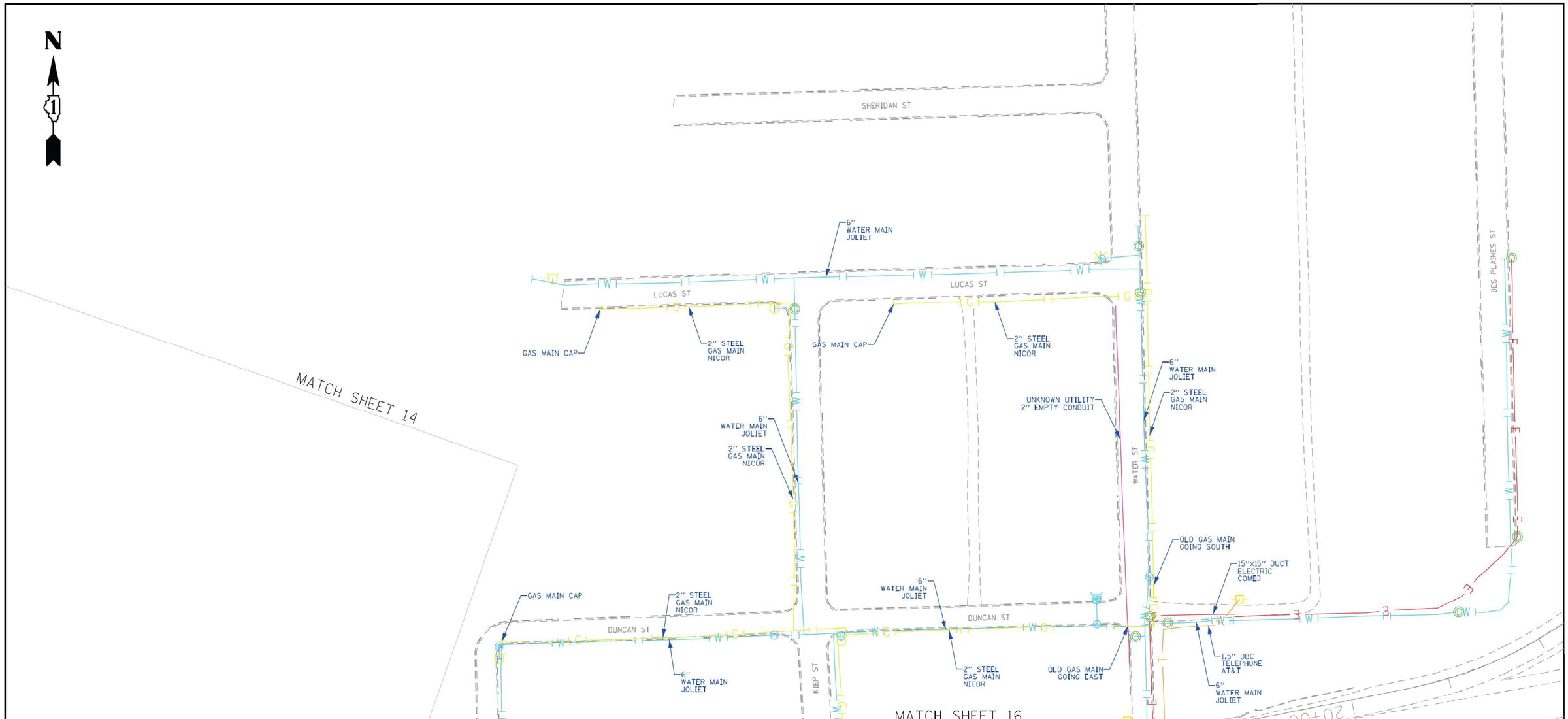

ASCE STANDARDS OF DEPICTION OF SUBSURFACE UTILITIES

QUALITY LEVEL A (QLA)
PRECISE HORIZONTAL AND VERTICAL LOCATION OF UTILITIES OBTAINED BY THE ACTUAL EXPOSURE (OR VERIFICATION OF PREVIOUSLY EXPOSED AND SURVEYED UTILITIES) USING MINIMALLY INTRUSIVE EXCAVATION EQUIPMENT TO MINIMIZE POTENTIAL FOR UTILITY DAMAGE, AND SUBSEQUENT MEASURMENT OF THE SUBSURFACE UTILITIES WITH OTHER UTILITY ATTRIBUTES SUCH AS TYPE, SIZE & MATERIAL OF UTILITY.

QUALITY LEVEL B (QLB)
INFORMATION OBTAINED THROUGH THE APPLICATION OF APPROPRIATE SURFACE GEOPHYSICAL METHODS TO DETERMINE THE EXISTENCE AND APPROXIMATE HORIZONTAL POSITION OF SUBSURFACE UTILTIES. QUALITY LEVEL B DATA SHOULD BE REPRODUCIBLE BY SURFACE GEOPHYSICS AT ANY POINT OF THEIR DEPICTION. THIS INFORMATION IS SURVEYED TO APPLICABLE TOLERANCES DEFINED BY THE PROJECT AND REDUCED ONTO PLAN DOCUMENTS.

QUALITY LEVEL C (QLC)
INFORMATION OBTAINED BY SURVEYING AND PLOTTING VISIBLE ABOVE-GROUND UTLITY FEATURES AND BY USING PROFESSIONAL JUDGEMENT IN CORRELATING THIS INFORMATION TO QUALITY LEVEL D INFORMATION.

QUALITY LEVEL D (QLD)
INFORMATION DERIVED FROM EXISITNG RECORDS OR ORAL RECOLLECTIONS.

GENERAL NOTES:

WGI INC. HAS EXERCISED ITS BEST PROFESSIONAL EXPERTISE AND GEOPHYSICAL PROSPECTING TECHNIQUES TO DEVELOP THIS MAPPING OF SUBSURFACE UTILITIES WITHIN THE PROJECT LIMITS.

WGI INC. DOES NOT GUARANTEE THAT UTILITIES SHOWN COMPRISE ALL UTILITIES WITHIN THE PROJECT AREA.

WGI's FIELD INVESTIGATION WAS PERFORMED 10/04/19 THROUGH 03/20/20. CHANGES TO UTILITIES AFTER 03/20/20 MAY HAVE BEEN MADE AND THEREFORE MAY RESULT IN VARIANCES FROM THIS PLAN IF DEEMED ADVISABLE PRIOR TO FINAL DESIGN AND CONSTRUCTION.

FIELD LOCATED UTILITIES MEET THE FEDERAL HIGHWAY ADMINISTRATION DEFINITION FOR "QUALITY LEVEL B" (QLB) STANDARDS.

ALL UTILITIES SHOWN ARE QUALITY LEVEL B (QLB) UNLESS NOTED OTHERWISE.

ALL ELECTRONIC DEPTHS PROVIDED ARE APPROXIMATE AND SHOULD BE USED FOR INFORMATIONAL PURPOSES ONLY.

UTILITY LEGEND:

A	- AERIAL
	- UNKNOWN UTILITY
O	- OIL
CTV	- CABLE TV
T	- TELEPHONE
G	- GAS
E	- ELECTRIC
E	- TRAFFIC SIGNAL/LIGHTING
W	- WATER
	- FORCE MAIN
FO	- FIBER OPTIC
	- TEST HOLE
EOI	- END OF INFORMATION
ED	- ELECTRONIC DEPTH

JOHN J. BELLIS
062-044796
REGISTERED PROFESSIONAL ENGINEER OF ILLINOIS

John J Bellis
signature

04/06/20
date

license expires 11/30/2021

AMERICAN SURVEYING & ENGINEERING
American Surveying & Engineering, P.C.
30 N. LaSalle St., Suite 3440
Chicago, IL 60602
Phone No. (312) 277-2000

WGI
2001 Butterfield Road, Suite 410
Downers Grove, IL 60515
Phone No. (630) 307-3800
Fax No. (630) 307-7030
Cert No. 6091 - LB No. 7055

USER NAME = Erick.Maleza	DESIGNED -	REVISED -	
	DRAWN - EM	REVISED -	
PLOT SCALE = 100.0000 ' / in.	CHECKED - EG	REVISED -	
PLOT DATE = 3/26/2020	DATE -	REVISED -	

STATE OF ILLINOIS
DEPARTMENT OF TRANSPORTATION

I-80 LARKIN TO WATER ST.
JOLIET, ILLINOIS

SCALE: | SHEET 4 OF 7 SHEETS | STA. TO STA.

F.A. RTE.	SECTION	COUNTY	TOTAL SHEETS	SHEET NO.
		WILL	1230	404
		CONTRACT NO. P-91-185-09		
		ILLINOIS	FED. AID PROJECT	

IDOT W.O. 213 & 214

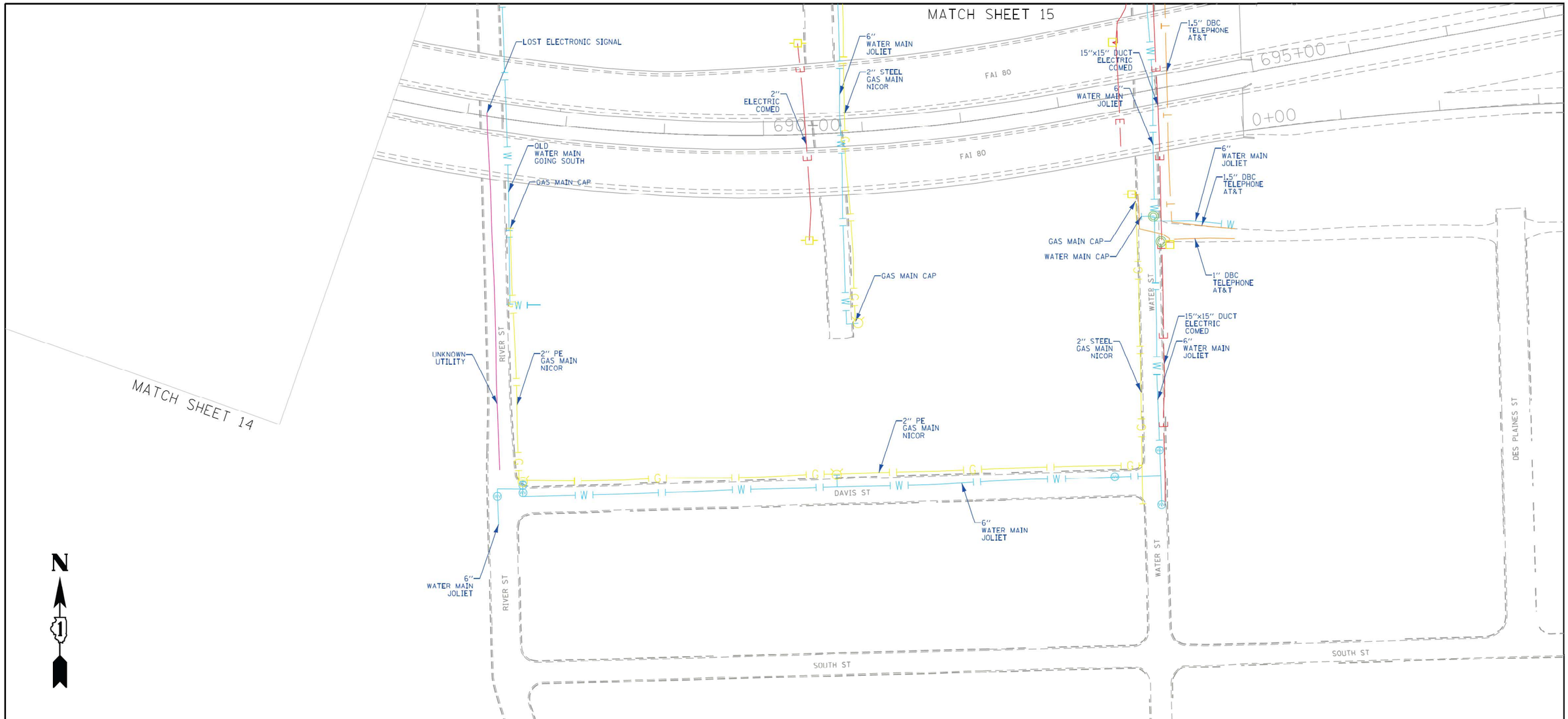

ASCE STANDARDS OF DEPICTION OF SUBSURFACE UTILITIES

QUALITY LEVEL A (QLA)
PRECISE HORIZONTAL AND VERTICAL LOCATION OF UTILITIES OBTAINED BY THE ACTUAL EXPOSURE (OR VERIFICATION OF PREVIOUSLY EXPOSED AND SURVEYED UTILITIES) USING MINIMALLY INTRUSIVE EXCAVATION EQUIPMENT TO MINIMIZE POTENTIAL FOR UTILITY DAMAGE, AND SUBSEQUENT MEASURMENT OF THE SUBSURFACE UTILITIES WITH OTHER UTILITY ATTRIBUTES SUCH AS TYPE, SIZE & MATERIAL OF UTILITY.

QUALITY LEVEL B (QLB)
INFORMATION OBTAINED THROUGH THE APPLICATION OF APPROPRIATE SURFACE GEOPHYSICAL METHODS TO DETERMINE THE EXISTENCE AND APPROXIMATE HORIZONTAL POSITION OF SUBSURFACE UTILTIES. QUALITY LEVEL B DATA SHOULD BE REPRODUCIBLE BY SURFACE GEOPHYSICS AT ANY POINT OF THEIR DEPICTION. THIS INFORMATION IS SURVEYED TO APPLICABLE TOLERANCES DEFINED BY THE PROJECT AND REDUCED ONTO PLAN DOCUMENTS.

QUALITY LEVEL C (QLC)
INFORMATION OBTAINED BY SURVEYING AND PLOTTING VISIBLE ABOVE-GROUND UTLITY FEATURES AND BY USING PROFESSIONAL JUDGEMENT IN CORRELATING THIS INFORMATION TO QUALITY LEVEL D INFORMATION.

QUALITY LEVEL D (QLD)
INFORMATION DERIVED FROM EXISITNG RECORDS OR ORAL RECOLLECTIONS.

GENERAL NOTES:

WGI INC. HAS EXERCISED ITS BEST PROFESSIONAL EXPERTISE AND GEOPHYSICAL PROSPECTING TECHNIQUES TO DEVELOP THIS MAPPING OF SUBSURFACE UTILITIES WITHIN THE PROJECT LIMITS.

WGI INC. DOES NOT GUARANTEE THAT UTILITIES SHOWN COMPRISE ALL UTILITIES WITHIN THE PROJECT AREA.

WGI's FIELD INVESTIGATION WAS PERFORMED 10/04/19 THROUGH 03/20/20. CHANGES TO UTILITIES AFTER 03/20/20 MAY HAVE BEEN MADE AND THEREFORE MAY RESULT IN VARIANCES FROM THIS PLAN IF DEEMED ADVISABLE PRIOR TO FINAL DESIGN AND CONSTRUCTION.

FIELD LOCATED UTILITIES MEET THE FEDERAL HIGHWAY ADMINISTRATION DEFINITION FOR "QUALITY LEVEL B" (QLB) STANDARDS.

ALL UTILITIES SHOWN ARE QUALITY LEVEL B (QLB) UNLESS NOTED OTHERWISE.

ALL ELECTRONIC DEPTHS PROVIDED ARE APPROXIMATE AND SHOULD BE USED FOR INFORMATIONAL PURPOSES ONLY.

UTILITY LEGEND:

- A - AERIAL
- UNKNOWN UTILITY
- O - OIL
- CTV - CABLE TV
- T - TELEPHONE
- G - GAS
- E - ELECTRIC
- E - TRAFFIC SIGNAL/LIGHTING
- W - WATER
- FORCE MAIN
- FO - FIBER OPTIC
- TEST HOLE
- EOI - END OF INFORMATION
- ED - ELECTRONIC DEPTH

JOHN J. BELLIS
062-044796
REGISTERED PROFESSIONAL ENGINEER OF ILLINOIS

John J Bellis
signature

04/06/20
date

license expires 11/30/2021

AMERICAN SURVEYING & ENGINEERING
American Surveying & Engineering, P.C.
30 N. LaSalle St., Suite 3440
Chicago, IL 60602
Phone No. (312) 277-2000

WGI
2001 Butterfield Road, Suite 410
Downers Grove, IL 60515
Phone No. (630) 307-3800
Fax No. (630) 307-7030
Cert No. 6091 - LB No. 7055

USER NAME = Erick.Maleza	DESIGNED -	REVISED -	
	DRAWN - EM	REVISED -	
PLOT SCALE = 100.0000 ' / in.	CHECKED - EG	REVISED -	
PLOT DATE = 3/26/2020	DATE -	REVISED -	

STATE OF ILLINOIS
DEPARTMENT OF TRANSPORTATION

I-80 LARKIN TO WATER ST.
JOLIET, ILLINOIS

SCALE: | SHEET 5 OF 7 SHEETS | STA. | TO STA.

F.A. RTE.	SECTION	COUNTY	TOTAL SHEETS	SHEET NO.
		WILL	1230	405
		CONTRACT NO. P-91-185-09		
		ILLINOIS	FED. AID PROJECT	

IDOT W.O. 213 & 214

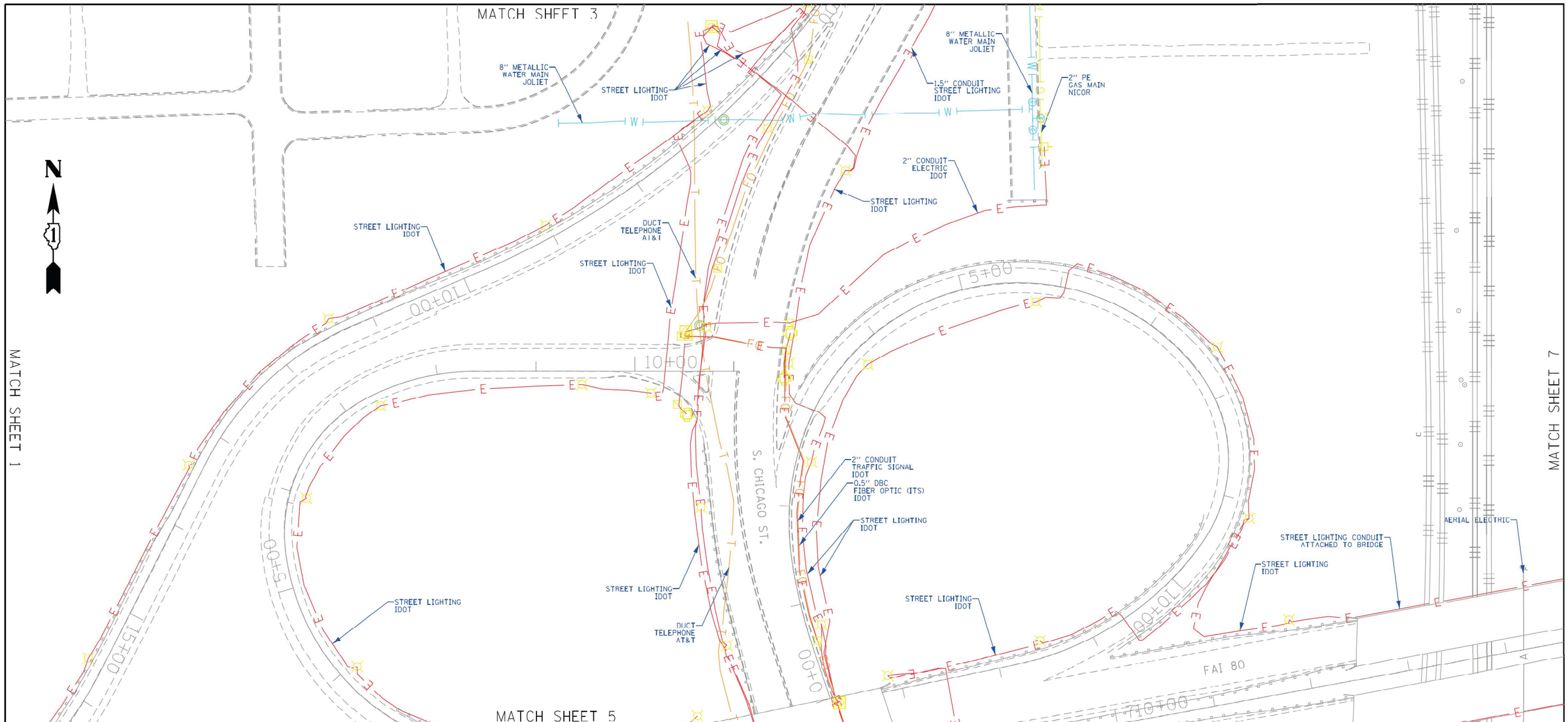

ASCE STANDARDS OF DEPICTION OF SUBSURFACE UTILITIES

QUALITY LEVEL A (QLA)
PRECISE HORIZONTAL AND VERTICAL LOCATION OF UTILITIES OBTAINED BY THE ACTUAL EXPOSURE (OR VERIFICATION OF PREVIOUSLY EXPOSED AND SURVEYED UTILITIES) USING MINIMALLY INTRUSIVE EXCAVATION EQUIPMENT TO MINIMIZE POTENTIAL FOR UTILITY DAMAGE, AND SUBSEQUENT MEASUREMENT OF THE SUBSURFACE UTILITIES WITH OTHER UTILITY ATTRIBUTES SUCH AS TYPE, SIZE & MATERIAL OF UTILITY.

QUALITY LEVEL B (QLB)
INFORMATION OBTAINED THROUGH THE APPLICATION OF APPROPRIATE SURFACE GEOPHYSICAL METHODS TO DETERMINE THE EXISTENCE AND APPROXIMATE HORIZONTAL POSITION OF SUBSURFACE UTILTIES. QUALITY LEVEL B DATA SHOULD BE REPRODUCIBLE BY SURFACE GEOPHYSICS AT ANY POINT OF THEIR DEPICTION. THIS INFORMATION IS SURVEYED TO APPLICABLE TOLERANCES DEFINED BY THE PROJECT AND REDUCED ONTO PLAN DOCUMENTS.

QUALITY LEVEL C (QLC)
INFORMATION OBTAINED BY SURVEYING AND PLOTTING VISIBLE ABOVE-GROUND UTLITY FEATURES AND BY USING PROFESSIONAL JUDGEMENT IN CORRELATING THIS INFORMATION TO QUALITY LEVEL D INFORMATION.

QUALITY LEVEL D (QLD)
INFORMATION DERIVED FROM EXISTING RECORDS OR ORAL RECOLLECTIONS.

GENERAL NOTES:

WGI INC. HAS EXERCISED ITS BEST PROFESSIONAL EXPERTISE AND GEOPHYSICAL PROSPECTING TECHNIQUES TO DEVELOP THIS MAPPING OF SUBSURFACE UTILITIES WITHIN THE PROJECT LIMITS.

WGI INC. DOES NOT GUARANTEE THAT UTILITIES SHOWN COMPRISE ALL UTILITIES WITHIN THE PROJECT AREA.

WGI's FIELD INVESTIGATION WAS PERFORMED 02/14/19 THROUGH 04/01/20. CHANGES TO UTILITIES AFTER 04/01/20 MAY HAVE BEEN MADE AND THEREFORE MAY RESULT IN VARIANCES FROM THIS PLAN IF DEEMED ADVISABLE PRIOR TO FINAL DESIGN AND CONSTRUCTION.

FIELD LOCATED UTILITIES MEET THE FEDERAL HIGHWAY ADMINISTRATION DEFINITION FOR "QUALITY LEVEL B" (QLB) STANDARDS.

ALL UTILITIES SHOWN ARE QUALITY LEVEL B (QLB) UNLESS NOTED OTHERWISE.

ALL ELECTRONIC DEPTHS PROVIDED ARE APPROXIMATE AND SHOULD BE USED FOR INFORMATIONAL PURPOSES ONLY.

UTILITY LEGEND:

A	- AERIAL
	- UNKNOWN UTILITY
O	- OIL
CTV	- CABLE TV
T	- TELEPHONE
G	- GAS
E	- ELECTRIC
E	- TRAFFIC SIGNAL/LIGHTING
W	- WATER
	- FORCE MAIN
FO	- FIBER OPTIC
	- TEST HOLE
EOI	- END OF INFORMATION
ED	- ELECTRONIC DEPTH

JOHN J. BELLIS
062-044796
REGISTERED PROFESSIONAL ENGINEER OF ILLINOIS

John J. Bellis
signature

04/22/20
date

license expires 11/30/2021

AMERICAN SURVEYING & ENGINEERING
American Surveying & Engineering, P.C.
30 N. LaSalle St., Suite 3440
Chicago, IL 60602
Phone No. (312) 277-2000

WGI
2001 Butterfield Road, Suite 410
Downers Grove, IL 60515
Phone No. (630) 307-3800
Fax No. (630) 307-7030
Cert No. 6091 - LB No. 7055

USER NAME = Erick.Maleza	DESIGNED -	REVISED -	
	DRAWN - EM	REVISED -	
PLOT SCALE = 100.0000 ' / in.	CHECKED - EG	REVISED -	
PLOT DATE = 4/22/2020	DATE -	REVISED -	

STATE OF ILLINOIS
DEPARTMENT OF TRANSPORTATION

I-80 FROM WATER ST. TO US 30
JOLIET, ILLINOIS

SCALE: | SHEET 6 OF 7 SHEETS | STA. | TO STA.

F.A. RTE.	SECTION	COUNTY	TOTAL SHEETS	SHEET NO.
		WILL	1230	406
		CONTRACT NO. P-91-185-09		
		ILLINOIS	FED. AID PROJECT	

IDOT W.O. 215 & 216

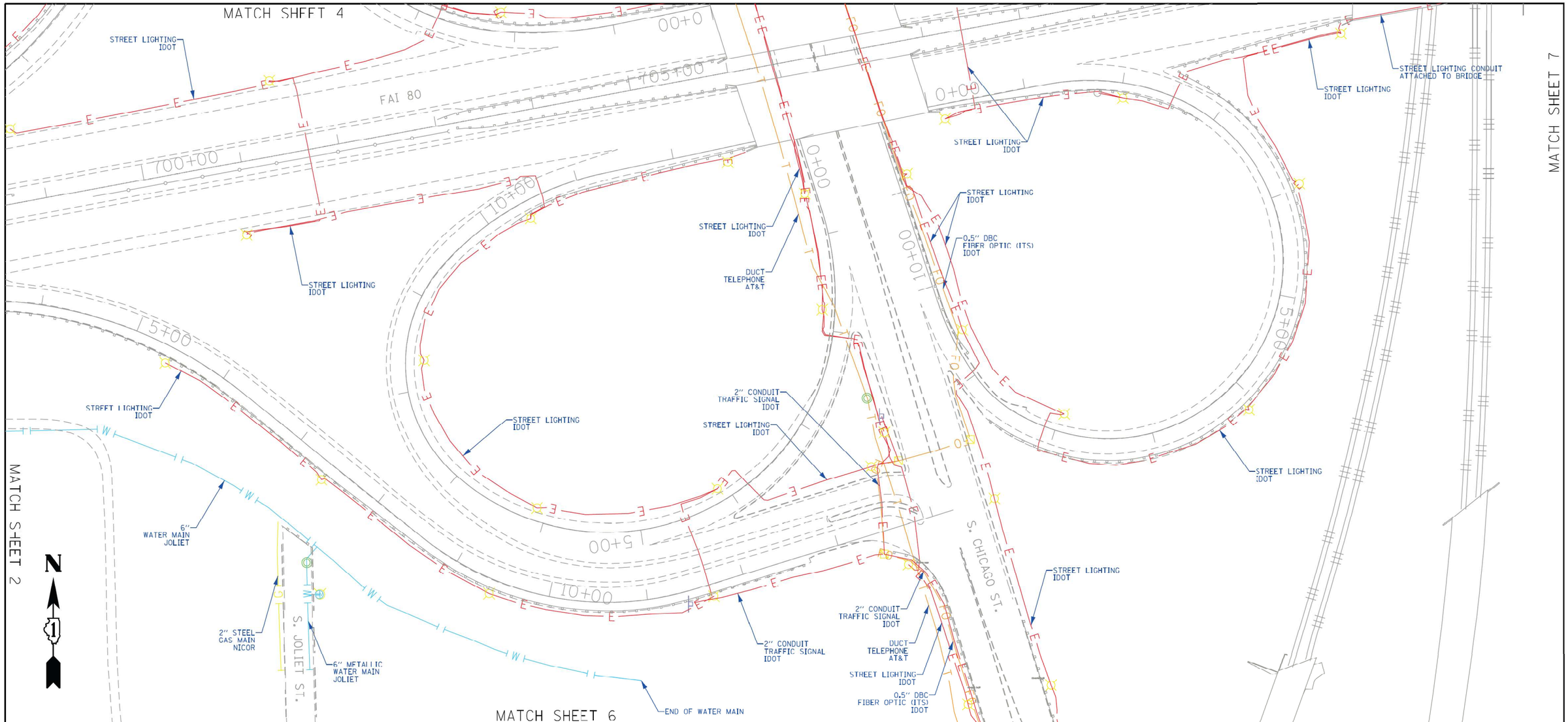

ASCE STANDARDS OF DEPICTION OF SUBSURFACE UTILITIES

QUALITY LEVEL A (QLA)
PRECISE HORIZONTAL AND VERTICAL LOCATION OF UTILITIES OBTAINED BY THE ACTUAL EXPOSURE (OR VERIFICATION OF PREVIOUSLY EXPOSED AND SURVEYED UTILITIES) USING MINIMALLY INTRUSIVE EXCAVATION EQUIPMENT TO MINIMIZE POTENTIAL FOR UTILITY DAMAGE, AND SUBSEQUENT MEASUREMENT OF THE SUBSURFACE UTILITIES WITH OTHER UTILITY ATTRIBUTES SUCH AS TYPE, SIZE & MATERIAL OF UTILITY.

QUALITY LEVEL B (QLB)
INFORMATION OBTAINED THROUGH THE APPLICATION OF APPROPRIATE SURFACE GEOPHYSICAL METHODS TO DETERMINE THE EXISTENCE AND APPROXIMATE HORIZONTAL POSITION OF SUBSURFACE UTILTIES. QUALITY LEVEL B DATA SHOULD BE REPRODUCIBLE BY SURFACE GEOPHYSICS AT ANY POINT OF THEIR DEPICTION. THIS INFORMATION IS SURVEYED TO APPLICABLE TOLERANCES DEFINED BY THE PROJECT AND REDUCED ONTO PLAN DOCUMENTS.

QUALITY LEVEL C (QLC)
INFORMATION OBTAINED BY SURVEYING AND PLOTTING VISIBLE ABOVE-GROUND UTLITY FEATURES AND BY USING PROFESSIONAL JUDGEMENT IN CORRELATING THIS INFORMATION TO QUALITY LEVEL D INFORMATION.

QUALITY LEVEL D (QLD)
INFORMATION DERIVED FROM EXISTING RECORDS OR ORAL RECOLLECTIONS.

GENERAL NOTES:

WGI INC. HAS EXERCISED ITS BEST PROFESSIONAL EXPERTISE AND GEOPHYSICAL PROSPECTING TECHNIQUES TO DEVELOP THIS MAPPING OF SUBSURFACE UTILITIES WITHIN THE PROJECT LIMITS.

WGI INC. DOES NOT GUARANTEE THAT UTILITIES SHOWN COMPRISE ALL UTILITIES WITHIN THE PROJECT AREA.

WGI's FIELD INVESTIGATION WAS PERFORMED 02/14/19 THROUGH 04/01/20. CHANGES TO UTILITIES AFTER 04/01/20 MAY HAVE BEEN MADE AND THEREFORE MAY RESULT IN VARIANCES FROM THIS PLAN IF DEEMED ADVISABLE PRIOR TO FINAL DESIGN AND CONSTRUCTION.

FIELD LOCATED UTILITIES MEET THE FEDERAL HIGHWAY ADMINISTRATION DEFINITION FOR "QUALITY LEVEL B" (QLB) STANDARDS.

ALL UTILITIES SHOWN ARE QUALITY LEVEL B (QLB) UNLESS NOTED OTHERWISE.

ALL ELECTRONIC DEPTHS PROVIDED ARE APPROXIMATE AND SHOULD BE USED FOR INFORMATIONAL PURPOSES ONLY.

UTILITY LEGEND:

A	- AERIAL
	- UNKNOWN UTILITY
O	- OIL
CTV	- CABLE TV
T	- TELEPHONE
G	- GAS
E	- ELECTRIC
E	- TRAFFIC SIGNAL/LIGHTING
W	- WATER
	- FORCE MAIN
FO	- FIBER OPTIC
	- TEST HOLE
EOI	- END OF INFORMATION
ED	- ELECTRONIC DEPTH

JOHN J. BELLIS
062-044796
REGISTERED PROFESSIONAL ENGINEER OF ILLINOIS

John J Bellis
signature

04/22/20
date

license expires 11/30/2021

AMERICAN SURVEYING & ENGINEERING
American Surveying & Engineering, P.C.
30 N. LaSalle St., Suite 3440
Chicago, IL 60602
Phone No. (312) 277-2000

WGI
2001 Butterfield Road, Suite 410
Downers Grove, IL 60515
Phone No. (630) 307-3800
Fax No. (630) 307-7030
Cert No. 6091 - LB No. 7055

USER NAME = Erick.Maleza	DESIGNED -	REVISED -	
	DRAWN - EM	REVISED -	
PLOT SCALE = 100.0000 ' / in.	CHECKED - EG	REVISED -	
PLOT DATE = 4/22/2020	DATE -	REVISED -	

STATE OF ILLINOIS
DEPARTMENT OF TRANSPORTATION

I-80 FROM WATER ST. TO US 30
JOLIET, ILLINOIS

SCALE: | SHEET 7 OF 7 SHEETS | STA. | TO STA.

F.A. RTE.	SECTION	COUNTY	TOTAL SHEETS	SHEET NO.
		WILL	1230	407
		CONTRACT NO. P-91-185-09		
		ILLINOIS	FED. AID PROJECT	

IDOT W.O. 215 & 216

PART OF THE SW 1/4 OF SECTION 16, TWP. 35 N., R. 10 E. OF THE 3RD. P.M.,
IN WILL COUNTY, ILLINOIS.

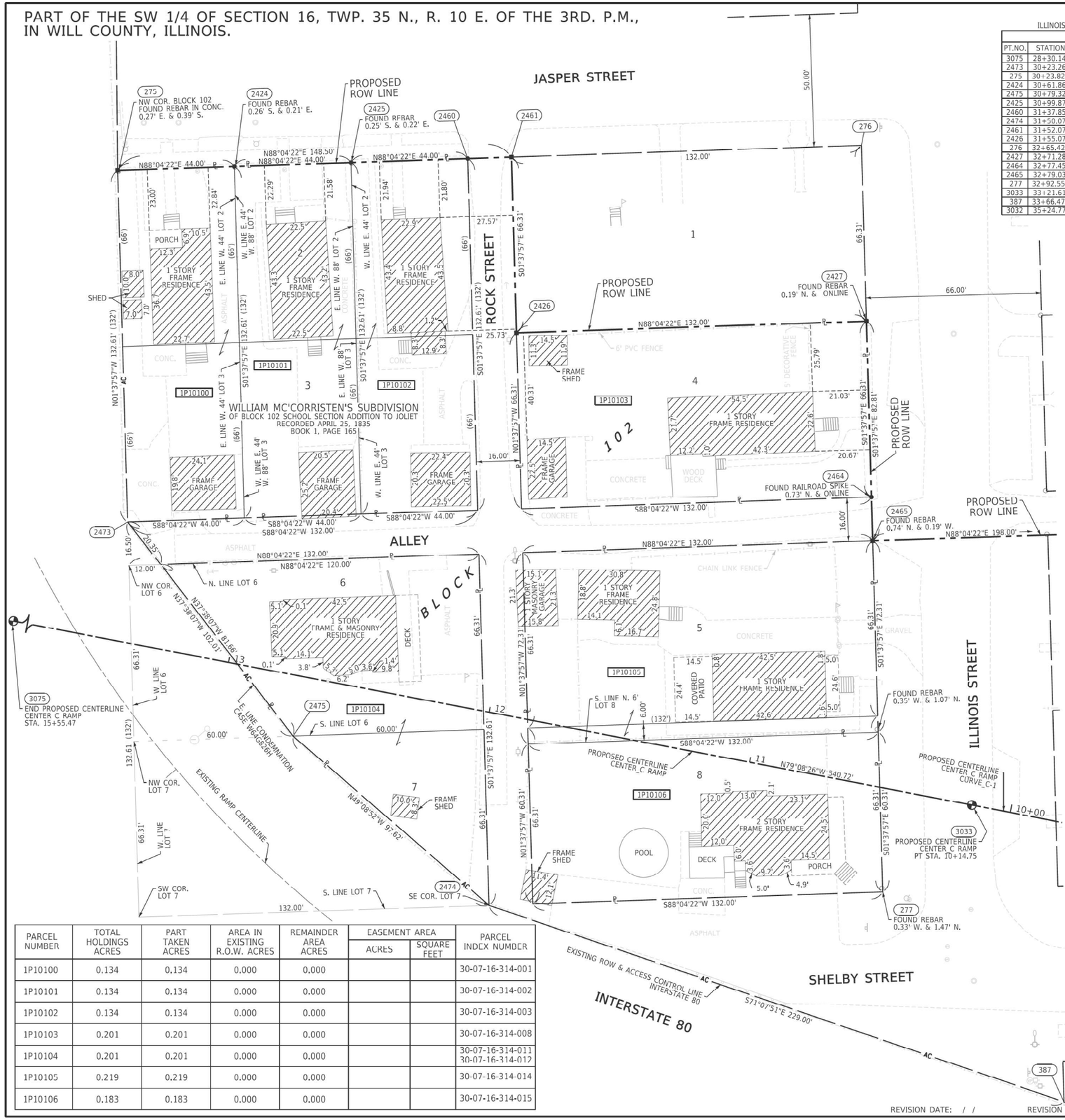

PROJECT COORDINATES
ILLINOIS STATE PLANE, EAST ZONE, NAD83 (2011)

COORDINATE TABLE ~ I-80

PT.NO.	STATION	OFFSET	NORTHING	EASTING
3075	28+30.14	238.79' LT.	1,765,486.9841	1,048,755.1244
2473	30+23.26	227.62' LT.	1,765,491.8603	1,048,967.9995
275	30+23.82	360.23' LT.	1,765,624.4175	1,048,964.2217
2424	30+61.86	360.62' LT.	1,765,625.8972	1,049,008.1953
2475	30+79.32	145.56' LT.	1,765,411.1060	1,049,030.3245
2425	30+99.87	361.73' LT.	1,765,627.3769	1,049,052.1687
2460	31+37.85	363.57' LT.	1,765,628.8566	1,049,096.1422
2474	31+50.07	82.17' LT.	1,765,347.2486	1,049,104.1678
2461	31+52.07	364.45' LT.	1,765,629.4115	1,049,112.6330
2426	31+55.07	298.23' LT.	1,765,563.1329	1,049,114.5219
276	32+65.42	375.13' LT.	1,765,633.8507	1,049,244.5535
2427	32+71.28	309.16' LT.	1,765,567.5720	1,049,246.4424
2464	32+77.45	243.22' LT.	1,765,501.2934	1,049,248.3313
2465	32+79.03	226.81' LT.	1,765,484.7999	1,049,248.8014
277	32+92.55	94.99' LT.	1,765,352.2426	1,049,252.5791
3033	33+21.61	130.75' LT.	1,765,385.1115	1,049,286.1627
387	33+66.47	23.12' LT.	1,765,273.1890	1,049,320.8589
3032	35+24.77	113.07' LT.	1,765,337.6749	1,049,495.4398

LEGEND

SECTION CORNER (9 10 16 15)
QUARTER SECTION CORNER (16 15)

- SECTION / QUARTER SECTION LINE
- PLATTED LOT LINES
- PROPERTY (DEED) LINE
- APL — APPARENT PROPERTY LINE
- EXISTING CENTERLINE
- PROPOSED CENTERLINE
- EXISTING RIGHT OF WAY LINE
- PROPOSED RIGHT OF WAY LINE
- EXISTING EASEMENT
- PROPOSED EASEMENT
- AC — EXISTING ACCESS CONTROL LINE
- AC — PROPOSED ACCESS CONTROL LINE
- 129.32' — MEASURED DIMENSION
- 129.32' (COMP) — COMPUTED DIMENSION
- (129.32') — RECORDED DIMENSION
- EXISTING BUILDING

GRAPHIC SCALE
FEET
0 20
SCALE: 1" = 20'

- IRON PIPE OR ROD FOUND
- CUT CROSS FOUND OR SET
- "MAG" NAIL SET
- 5/8" REBAR SET
- STAKING OF PROPOSED RIGHT OF WAY. SET DIVISION OF HIGHWAYS SURVEY MARKER TO MONUMENT THE POSITION SHOWN. IDENTIFIED BY INSCRIPTION DATA AND SURVEYORS REGISTRATION NUMBER.
- M — STAKING OF PROPOSED RIGHT OF WAY IN CULTIVATED AREAS. BURIED 5/8 INCH METAL ROD 20 INCHES BELOW GROUND TO MARK FUTURE SURVEY MARKER POSITION IDENTIFIED BY COLORED PLASTIC CAP BEARING SURVEYORS REGISTRATION NUMBER.
- PERMANENT SURVEY MARKER, I.D.O.T. STANDARD 667101.02 (TO BE SET BY OTHERS)
- RIGHT OF WAY STAKING PROPOSED TO BE SET

SURVEY NOTES:
1. ALL DIMENSIONS ARE MEASURED UNLESS OTHERWISE SPECIFIED.
2. BEARING, DISTANCES, AND COORDINATES SHOWN HEREON REFERENCE THE ILLINOIS STATE PLANE COORDINATE SYSTEM, EAST ZONE, NORTH AMERICAN DATUM OF 1983 (2011 ADJUSTMENT) "GRID". COORDINATES ARE FIXED HOLDING THE PUBLISHED NAD83(2011) VALUES FOR NGS CONTROL MONUMENTS WILL COUNTY GPS 713 (PID-AE2569), WILL COUNTY GPS 716 (PID-AE2570) AND WILL COUNTY GPS 718 (PID-AE2571).
3. ALL MEASURED AND CALCULATED DISTANCES ARE "GRID" NOT "GROUND". TO OBTAIN GROUND DISTANCES, DIVIDE GRID DISTANCES SHOWN BY THE COMBINATION FACTOR OF 0.99995667.
4. AREAS SHOWN ON THIS PLAT ARE "GROUND".
5. FIELD SURVEY COMPLETED IN DECEMBER 2021.

STATE OF ILLINOIS)
)SS
COUNTY OF WILL)

THIS IS TO CERTIFY THAT I, DAVID A. CLAASSEN, AN ILLINOIS PROFESSIONAL LAND SURVEYOR, (WE, CLAASSEN, WHITE & ASSOCIATES, P.C. AN ILLINOIS PROFESSIONAL DESIGN FIRM LAND SURVEYING CORPORATION, NUMBER 184-004039,) HAVE SURVEYED THE PLAT OF HIGHWAYS SHOWN HEREON IN SECTION 16, TOWNSHIP 35 NORTH, RANGE 10 EAST OF THE THIRD PRINCIPAL MERIDIAN, WILL COUNTY, THAT THE SURVEY IS TRUE AND COMPLETE AS SHOWN TO THE BEST OF MY KNOWLEDGE AND BELIEF, THAT THE PLAT CORRECTLY REPRESENTS SAID SURVEY, THAT ALL MONUMENTS FOUND AND ESTABLISHED ARE OF PERMANENT QUALITY AND OCCUPY THE POSITIONS SHOWN THEREON AND THAT THE MONUMENTS ARE SUFFICIENT TO ENABLE THE SURVEY TO BE RETRACED, MADE FOR THE DEPARTMENT OF TRANSPORTATION, STATE OF ILLINOIS.

DATED AT _____, ILLINOIS THIS ___ DAY OF _____ 2024 A.D.

ILLINOIS PROFESSIONAL LAND SURVEYOR NO. 035-002962
LICENSE EXPIRATION DATE: NOVEMBER 30, 2026

THIS PROFESSIONAL SERVICE CONFORMS TO THE CURRENT ILLINOIS MINIMUM STANDARDS FOR A BOUNDARY SURVEY.

STATE OF ILLINOIS — DAVID A. CLAASSEN — JOLIET, IL — NO. 2962 — PROFESSIONAL LAND SURVEYOR

PROPOSED CENTERLINE CENTER_C RAMP CURVE_C-1
P.I. STA= 9+07.47
Δ= 03°49'25"
D= 01°46'54"
R= 3216.00'
T= 107.35'
L= 214.63'
E= 1.79'
3032 P.C. STA= 8+00.12
3033 P.T. STA= 10+14.75

PARCEL NUMBER	TOTAL HOLDINGS ACRES	PART TAKEN ACRES	AREA IN EXISTING R.O.W. ACRES	REMAINDER AREA ACRES	EASEMENT AREA		PARCEL INDEX NUMBER
					ACRES	SQUARE FEET	
1P10100	0.134	0.134	0.000	0.000			30-07-16-314-001
1P10101	0.134	0.134	0.000	0.000			30-07-16-314-002
1P10102	0.134	0.134	0.000	0.000			30-07-16-314-003
1P10103	0.201	0.201	0.000	0.000			30-07-16-314-008
1P10104	0.201	0.201	0.000	0.000			30-07-16-314-011 30-07-16-314-012
1P10105	0.219	0.219	0.000	0.000			30-07-16-314-014
1P10106	0.183	0.183	0.000	0.000			30-07-16-314-015

CWA SURVEY
CLAASSEN, WHITE & ASSOCIATES, P.C.
LAND SURVEYORS
121 AIRPORT DRIVE, UNIT 1, JOLIET, ILLINOIS 60431
(815) 744-3720 claassenwhite@cwasurvey.com
CWA Job #7577

PLAT OF HIGHWAYS

STATE OF ILLINOIS
DEPARTMENT OF TRANSPORTATION
I-80

LIMITS: RIDGE ROAD TO US 30 — COUNTY: WILL
SECTION: — JOB NO.: R-91-016-20
STA. 30+23.26 TO STA. 33+66.47
SCALE: 1" = 20' — SHEET 408 OF 1230 SHEETS

BUREAU OF LAND ACQUISITION
201 WEST CENTER COURT
SCHAUMBURG, ILLINOIS 60196

IDOT USE ONLY

APPROVED
By William Wright at 2:49 pm, Nov 13, 2024

REVISION DATE: / / REVISION MADE BY:

PART OF THE SW 1/4 OF SECTION 16, TWP. 35 N., R. 10 E. OF THE 3RD. P.M.,
IN WILL COUNTY, ILLINOIS.

PROJECT COORDINATES
ILLINOIS STATE PLANE, EAST ZONE, NAD83 (2011)

COORDINATE TABLE ~ INTERSTATE 80

PT.NO.	STATION	OFFSET	NORTHING	EASTING
3003	23+29.13	0.00' RT.	1,765,137.6775	1,048,295.7911
2465	32+79.03	226.81' LT.	1,765,484.7999	1,049,248.8014
3033	33+21.61	130.75' LT.	1,765,385.1115	1,049,286.1627
2457	33+38.55	235.00' LT.	1,765,487.0196	1,049,314.7649
188	33+55.28	103.61' LT.	1,765,354.4623	1,049,318.5427
189	33+64.30	38.27' LT.	1,765,288.4882	1,049,320.4229
387	33+66.47	23.12' LT.	1,765,273.1890	1,049,320.8589
2456	34+56.24	256.42' LT.	1,765,491.4587	1,049,446.6869
2459	34+67.40	191.26' LT.	1,765,425.1801	1,049,448.5758
2451	34+82.33	194.48' LT.	1,765,425.7350	1,049,465.0667
243	35+04.63	3.54' RT.	1,765,226.6489	1,049,454.2338
2466	35+21.64	4.11' RT.	1,765,223.0527	1,049,470.8429
3032	35+24.77	113.07' LT.	1,765,337.6749	1,049,495.4398
3004	35+66.66	0.00' RT.	1,765,218.4571	1,049,515.7794
2454	35+88.34	288.28' LT.	1,765,496.4528	1,049,595.0998
2450	36+03.54	223.74' LT.	1,765,430.1742	1,049,596.9887
187	36+18.75	159.20' LT.	1,765,363.8956	1,049,598.8775
190	36+33.89	94.96' LT.	1,765,297.9215	1,049,600.7578
242	36+56.70	1.85' RT.	1,765,198.5037	1,049,603.5911

LEGEND

SECTION CORNER

QUARTER SECTION CORNER

SECTION / QUARTER SECTION LINE
PLATTED LOT LINES
PROPERTY (DEED) LINE
APL — APPARENT PROPERTY LINE
EXISTING CENTERLINE
PROPOSED CENTERLINE
EXISTING RIGHT OF WAY LINE
PROPOSED RIGHT OF WAY LINE
EXISTING EASEMENT
PROPOSED EASEMENT
AC — EXISTING ACCESS CONTROL LINE
AC — PROPOSED ACCESS CONTROL LINE
129.32' — MEASURED DIMENSION
129.32' (COMP) — COMPUTED DIMENSION
(129.32') — RECORDED DIMENSION
EXISTING BUILDING

GRAPHIC SCALE
FEET
SCALE: 1" = 20'

IRON PIPE OR ROD FOUND
"MAG" NAIL SET
CUT CROSS FOUND OR SET
5/8" REBAR SET

STAKING OF PROPOSED RIGHT OF WAY. SET DIVISION OF HIGHWAYS SURVEY MARKER TO MONUMENT THE POSITION SHOWN. IDENTIFIED BY INSCRIPTION DATA AND SURVEYORS REGISTRATION NUMBER.

M — STAKING OF PROPOSED RIGHT OF WAY IN CULTIVATED AREAS. BURIED 5/8 INCH METAL ROD 20 INCHES BELOW GROUND TO MARK FUTURE SURVEY MARKER POSITION IDENTIFIED BY COLORED PLASTIC CAP BEARING SURVEYORS REGISTRATION NUMBER.

PERMANENT SURVEY MARKER, I.D.O.T. STANDARD 667101.02 (TO BE SET BY OTHERS)

RIGHT OF WAY STAKING PROPOSED TO BE SET

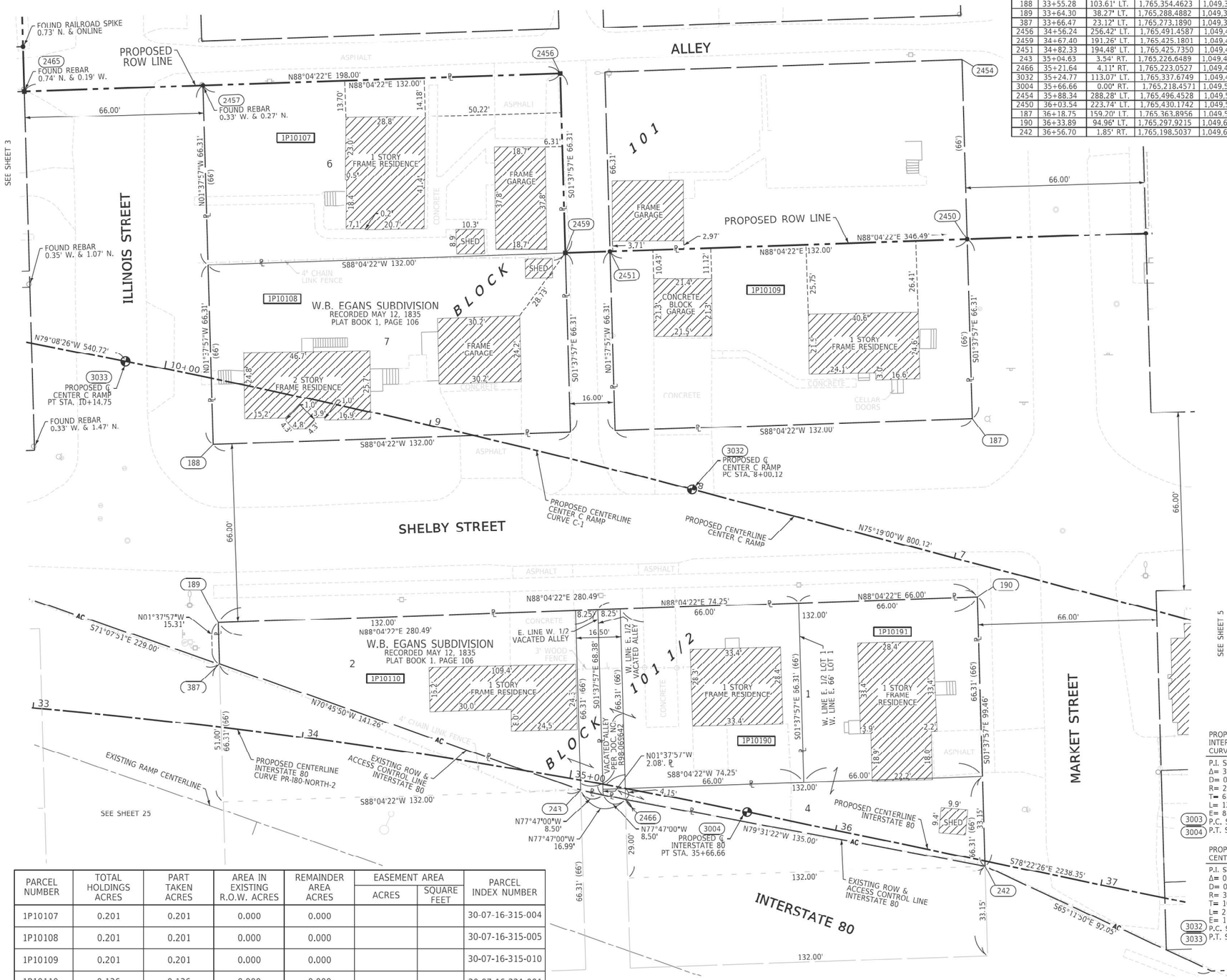

PROPOSED CENTERLINE
INTERSTATE 80
CURVE PR-I80-NORTH-2

P.I. STA= 29+63.27
Δ= 30°49'42"
D= 02°29'28"
R= 2300.00'
T= 634.14'
L= 1237.53'
E= 85.82'
3003 P.C. STA= 23+29.13
3004 P.T. STA= 35+66.66

PROPOSED CENTERLINE
CENTER_C RAMP CURVE_C-1

P.I. STA= 9+07.47
Δ= 03°49'25"
D= 01°46'54"
R= 3216.00'
T= 107.35'
L= 214.63'
E= 1.79'
3032 P.C. STA= 8+00.12
3033 P.T. STA= 10+14.75

PARCEL NUMBER	TOTAL HOLDINGS ACRES	PART TAKEN ACRES	AREA IN EXISTING R.O.W. ACRES	REMAINDER AREA ACRES	EASEMENT AREA ACRES	EASEMENT AREA SQUARE FEET	PARCEL INDEX NUMBER
1P10107	0.201	0.201	0.000	0.000			30-07-16-315-004
1P10108	0.201	0.201	0.000	0.000			30-07-16-315-005
1P10109	0.201	0.201	0.000	0.000			30-07-16-315-010
1P10110	0.136	0.136	0.000	0.000			30-07-16-321-001
1P10190	0.113	0.113	0.000	0.000			30-07-16-321-008
1P10191	0.158	0.158	0.000	0.000			30-07-16-321-009 30-07-16-321-010

SURVEY NOTES:
1. ALL DIMENSIONS ARE MEASURED UNLESS OTHERWISE SPECIFIED.
2. BEARING, DISTANCES, AND COORDINATES SHOWN HEREON REFERENCE THE ILLINOIS STATE PLANE COORDINATE SYSTEM, EAST ZONE, NORTH AMERICAN DATUM OF 1983 (2011 ADJUSTMENT) "GRID". COORDINATES ARE FIXED HOLDING THE PUBLISHED NAD83(2011) VALUES FOR NGS CONTROL MONUMENTS WILL COUNTY GPS 713 (PID-AE2569), WILL COUNTY GPS 716 (PID-AE2570) AND WILL COUNTY GPS 718 (PID-AE2571).
3. ALL MEASURED AND CALCULATED DISTANCES ARE "GRID" NOT "GROUND". TO OBTAIN GROUND DISTANCES, DIVIDE GRID DISTANCES SHOWN BY THE COMBINATION FACTOR OF 0.99995667.
4. AREAS SHOWN ON THIS PLAT ARE "GROUND".
5. FIELD SURVEY COMPLETED IN DECEMBER 2021.

STATE OF ILLINOIS)
)SS
COUNTY OF WILL)

THIS IS TO CERTIFY THAT I, DAVID A. CLAASSEN, AN ILLINOIS PROFESSIONAL LAND SURVEYOR, (WE, CLAASSEN, WHITE & ASSOCIATES, P.C. AN ILLINOIS PROFESSIONAL DESIGN FIRM LAND SURVEYING CORPORATION, NUMBER 184-004039,) HAVE SURVEYED THE PLAT OF HIGHWAYS SHOWN HEREON IN SECTION 16, TOWNSHIP 35 NORTH, RANGE 10 EAST OF THE THIRD PRINCIPAL MERIDIAN, WILL COUNTY, THAT THE SURVEY IS TRUE AND COMPLETE AS SHOWN TO THE BEST OF MY KNOWLEDGE AND BELIEF, THAT THE PLAT CORRECTLY REPRESENTS SAID SURVEY, THAT ALL MONUMENTS FOUND AND ESTABLISHED ARE OF PERMANENT QUALITY AND OCCUPY THE POSITIONS SHOWN THEREON AND THAT THE MONUMENTS ARE SUFFICIENT TO ENABLE THE SURVEY TO BE RETRACED, MADE FOR THE DEPARTMENT OF TRANSPORTATION, STATE OF ILLINOIS.

DATED AT _____, ILLINOIS THIS ___ DAY OF _____ 2024 A.D.

ILLINOIS PROFESSIONAL LAND SURVEYOR NO. 035-002962
LICENSE EXPIRATION DATE: NOVEMBER 30, 2026

THIS PROFESSIONAL SERVICE CONFORMS TO THE CURRENT ILLINOIS MINIMUM STANDARDS FOR A BOUNDARY SURVEY.

STATE OF ILLINOIS
DAVID A. CLAASSEN
JOLIET, IL
NO. 2962
PROFESSIONAL LAND SURVEYOR

CWA SURVEY
CLAASSEN, WHITE & ASSOCIATES, P.C.
LAND SURVEYORS
121 AIRPORT DRIVE, UNIT 1, JOLIET, ILLINOIS 60431
(815) 744-3720 claassenwhite@cwasurvey.com
CWA Job #7577

PLAT OF HIGHWAYS

STATE OF ILLINOIS
DEPARTMENT OF TRANSPORTATION
I-80

LIMITS: RIDGE ROAD TO US 30 COUNTY: WILL
SECTION: JOB NO.: R-91-016-20
STA. 32+79.03 TO STA. 36+56.70
SCALE: 1" = 20' SHEET 409 OF 1230 SHEETS

IDOT USE ONLY

APPROVED
By William Wright at 2:50 pm, Nov 13, 2024

REVISION DATE: / / REVISION MADE BY:

BUREAU OF LAND ACQUISITION
201 WEST CENTER COURT
SCHAUMBURG, ILLINOIS 60196

PART OF THE SW 1/4
OF SECTION 16, TWP. 35 N.,
R. 10 E. OF THE 3RD. P.M.,
IN WILL COUNTY, ILLINOIS.

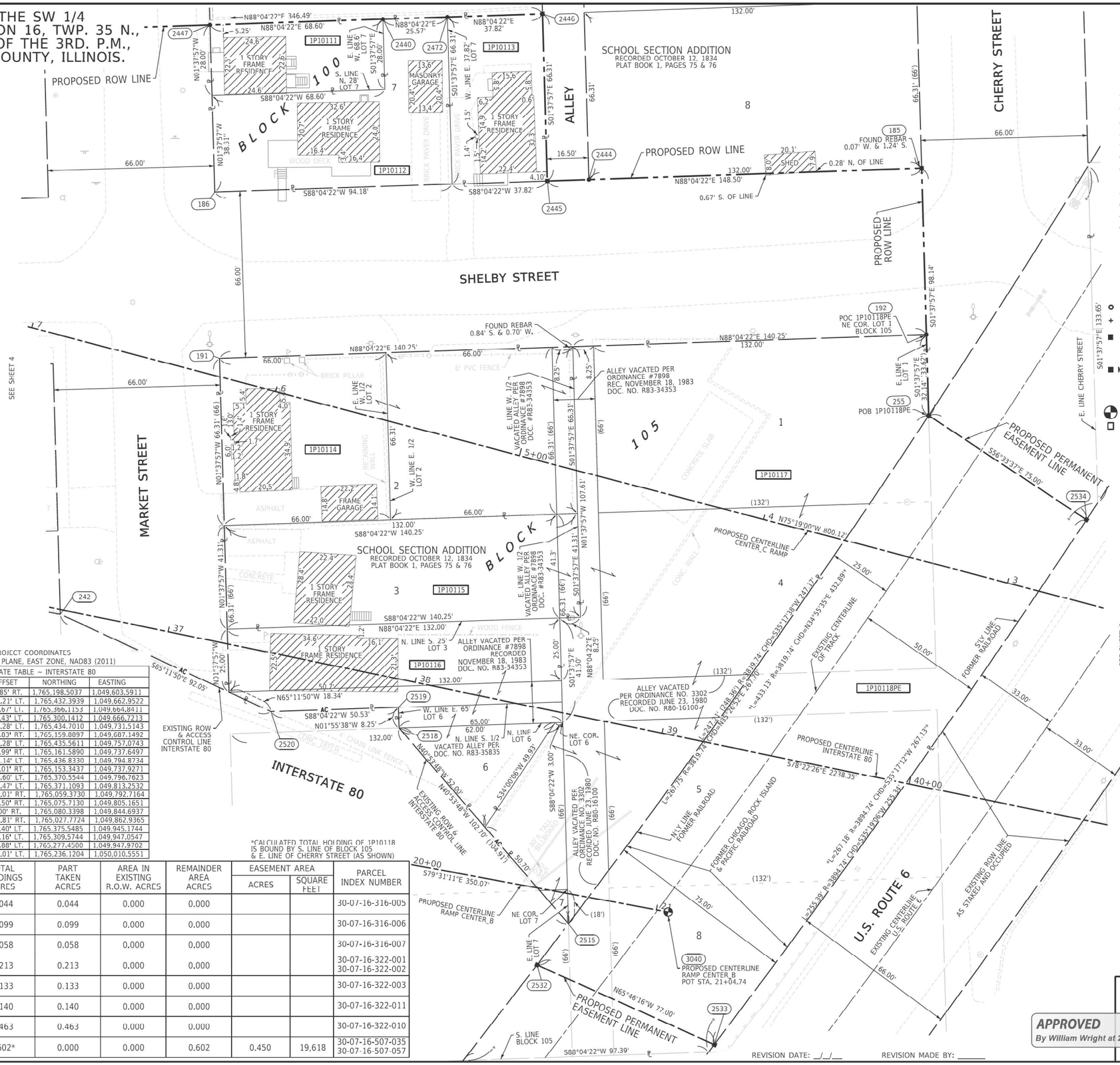

LEGEND

SECTION CORNER

QUARTER SECTION CORNER

GRAPHIC SCALE FEET

SCALE: 1" = 20'

SECTION / QUARTER SECTION LINE
PLATTED LOT LINES
PROPERTY (DEED) LINE
APPARENT PROPERTY LINE
EXISTING CENTERLINE
PROPOSED CENTERLINE
EXISTING RIGHT OF WAY LINE
PROPOSED RIGHT OF WAY LINE
EXISTING EASEMENT
PROPOSED EASEMENT
EXISTING ACCESS CONTROL LINE
PROPOSED ACCESS CONTROL LINE
129.32' MEASURED DIMENSION
129.32' (COMP) COMPUTED DIMENSION
(129.32') RECORDED DIMENSION
EXISTING BUILDING

IRON PIPE OR ROD FOUND
CUT CROSS FOUND OR SET
"MAG" NAIL SET
5/8" REBAR SET

STAKING OF PROPOSED RIGHT OF WAY. SET DIVISION OF HIGHWAYS SURVEY MARKER TO MONUMENT THE POSITION SHOWN. IDENTIFIED BY INSCRIPTION DATA AND SURVEYORS REGISTRATION NUMBER.

STAKING OF PROPOSED RIGHT OF WAY IN CULTIVATED AREAS. BURIED 5/8 INCH METAL ROD 20 INCHES BELOW GROUND TO MARK FUTURE SURVEY MARKER POSITION IDENTIFIED BY COLORED PLASTIC CAP BEARING SURVEYORS REGISTRATION NUMBER.

PERMANENT SURVEY MARKER, I.D.O.T. STANDARD 667101.02 (TO BE SET BY OTHERS)

RIGHT OF WAY STAKING PROPOSED TO BE SET

SURVEY NOTES:
1. ALL DIMENSIONS ARE MEASURED UNLESS OTHERWISE SPECIFIED.
2. BEARING, DISTANCES, AND COORDINATES SHOWN HEREON REFERENCE THE ILLINOIS STATE PLANE COORDINATE SYSTEM, EAST ZONE, NORTH AMERICAN DATUM OF 1983 (2011 ADJUSTMENT) "GRID". COORDINATES ARE FIXED HOLDING THE PUBLISHED NAD83(2011) VALUES FOR NGS CONTROL MONUMENTS WILL COUNTY GPS 713 (PID-AE2569), WILL COUNTY GPS 716 (PID-AE2570) AND WILL COUNTY GPS 718 (PID-AE2571).
3. ALL MEASURED AND CALCULATED DISTANCES ARE "GRID" NOT "GROUND". TO OBTAIN GROUND DISTANCES, DIVIDE GRID DISTANCES SHOWN BY THE COMBINATION FACTOR OF 0.99995667.
4. AREAS SHOWN ON THIS PLAT ARE "GROUND".
5. FIELD SURVEY COMPLETED IN DECEMBER 2021.

STATE OF ILLINOIS)
)SS
COUNTY OF WILL)

THIS IS TO CERTIFY THAT I, DAVID A. CLAASSEN, AN ILLINOIS PROFESSIONAL LAND SURVEYOR, (WE, CLAASSEN, WHITE & ASSOCIATES, P.C. AN ILLINOIS PROFESSIONAL DESIGN FIRM LAND SURVEYING CORPORATION, NUMBER 184-004039,) HAVE SURVEYED THE PLAT OF HIGHWAYS SHOWN HEREON IN SECTION 16, TOWNSHIP 35 NORTH, RANGE 10 EAST OF THE THIRD PRINCIPAL MERIDIAN, WILL COUNTY, THAT THE SURVEY IS TRUE AND COMPLETE AS SHOWN TO THE BEST OF MY KNOWLEDGE AND BELIEF, THAT THE PLAT CORRECTLY REPRESENTS SAID SURVEY, THAT ALL MONUMENTS FOUND AND ESTABLISHED ARE OF PERMANENT QUALITY AND OCCUPY THE POSITIONS SHOWN THEREON AND THAT THE MONUMENTS ARE SUFFICIENT TO ENABLE THE SURVEY TO BE RETRACED, MADE FOR THE DEPARTMENT OF TRANSPORTATION, STATE OF ILLINOIS.

DATED AT _____, ILLINOIS THIS __ DAY OF _____ 2024 A.D.

_____
ILLINOIS PROFESSIONAL LAND SURVEYOR NO. 035-002962
LICENSE EXPIRATION DATE: NOVEMBER 30, 2026

THIS PROFESSIONAL SERVICE CONFORMS TO THE CURRENT ILLINOIS MINIMUM STANDARDS FOR A BOUNDARY SURVEY.

STATE OF ILLINOIS DAVID A. CLAASSEN JOLIET, IL NO. 2962 PROFESSIONAL LAND SURVEYOR

PROJECT COORDINATES
ILLINOIS STATE PLANE, EAST ZONE, NAD83 (2011)

COORDINATE TABLE ~ INTERSTATE 80

PT.NO.	STATION	OFFSET	NORTHING	EASTING
242	36+56.70	1.85' RT.	1,765,198.5037	1,049,603.5911
244	36+67.70	239.21' LT.	1,765,432.3939	1,049,662.9522
186	36+82.91	174.67' LT.	1,765,366.1153	1,049,664.8411
191	36+98.05	110.43' LT.	1,765,300.1412	1,049,666.7213
2440	37+34.40	255.28' LT.	1,765,434.7010	1,049,731.5143
2520	37+46.32	22.03' RT.	1,765,159.0897	1,049,607.1492
2472	37+59.26	261.28' LT.	1,765,435.5611	1,049,757.0743
2519	37+95.44	10.99' RT.	1,765,161.5890	1,049,737.6497
2446	37+96.03	270.14' LT.	1,765,436.8330	1,049,794.8734
2518	37+97.38	19.01' RT.	1,765,153.3437	1,049,737.9271
2445	38+11.23	205.60' LT.	1,765,370.5544	1,049,796.7623
2444	38+27.27	209.47' LT.	1,765,371.1093	1,049,813.2532
2532	38+69.98	100.01' RT.	1,765,059.3730	1,049,792.7164
2515	38+78.88	81.50' RT.	1,765,075.7130	1,049,805.1651
3040	39+16.66	69.00' RT.	1,765,080.3398	1,049,844.6937
2533	39+45.13	116.81' RT.	1,765,027.7724	1,049,862.9365
185	39+55.59	240.40' LT.	1,765,375.5485	1,049,945.1744
192	39+70.73	176.16' LT.	1,765,309.5744	1,049,947.0547
255	39+78.10	144.88' LT.	1,765,277.4500	1,049,947.9702
2534	40+47.73	117.01' LT.	1,765,236.1204	1,050,010.5551

*CALCULATED TOTAL HOLDING OF 1P10118 IS BOUND BY S. LINE OF BLOCK 105 & E. LINE OF CHERRY STREET (AS SHOWN)

PARCEL NUMBER	TOTAL HOLDINGS ACRES	PART TAKEN ACRES	AREA IN EXISTING R.O.W. ACRES	REMAINDER AREA ACRES	EASEMENT AREA ACRES	EASEMENT AREA SQUARE FEET	PARCEL INDEX NUMBER
1P10111	0.044	0.044	0.000	0.000			30-07-16-316-005
1P10112	0.099	0.099	0.000	0.000			30-07-16-316-006
1P10113	0.058	0.058	0.000	0.000			30-07-16-316-007
1P10114	0.213	0.213	0.000	0.000			30-07-16-322-001 30-07-16-322-002
1P10115	0.133	0.133	0.000	0.000			30-07-16-322-003
1P10116	0.140	0.140	0.000	0.000			30-07-16-322-011
1P10117	0.463	0.463	0.000	0.000			30-07-16-322-010
1P10118PE	0.602*	0.000	0.000	0.602	0.450	19,618	30-07-16-507-035 30-07-16-507-057

CWA SURVEY

CLAASSEN, WHITE & ASSOCIATES, P.C.
LAND SURVEYORS
121 AIRPORT DRIVE, UNIT I, JOLIET, ILLINOIS 60431
(815) 744-3720 claassenwhite@cwasurvey.com
CWA Job #7577

PLAT OF HIGHWAYS

STATE OF ILLINOIS
DEPARTMENT OF TRANSPORTATION
I-80

LIMITS: RIDGE ROAD TO US 30 COUNTY: WILL
SECTION: JOB NO.: R-91-016-20
STA. 36+56.70 TO STA. 40+47.73
SCALE: 1" = 20' SHEET 410 OF 1230 SHEETS

BUREAU OF LAND ACQUISITION
201 WEST CENTER COURT
SCHAUMBURG, ILLINOIS 60196

IDOT USE ONLY

APPROVED
By William Wright at 2:50 pm, Nov 13, 2024

REVISION DATE: __/__/__ REVISION MADE BY: _____

PART OF THE SW 1/4 OF SECTION 16, TWP. 35 N., R. 10 E. OF THE 3RD. P.M.,
IN WILL COUNTY, ILLINOIS.

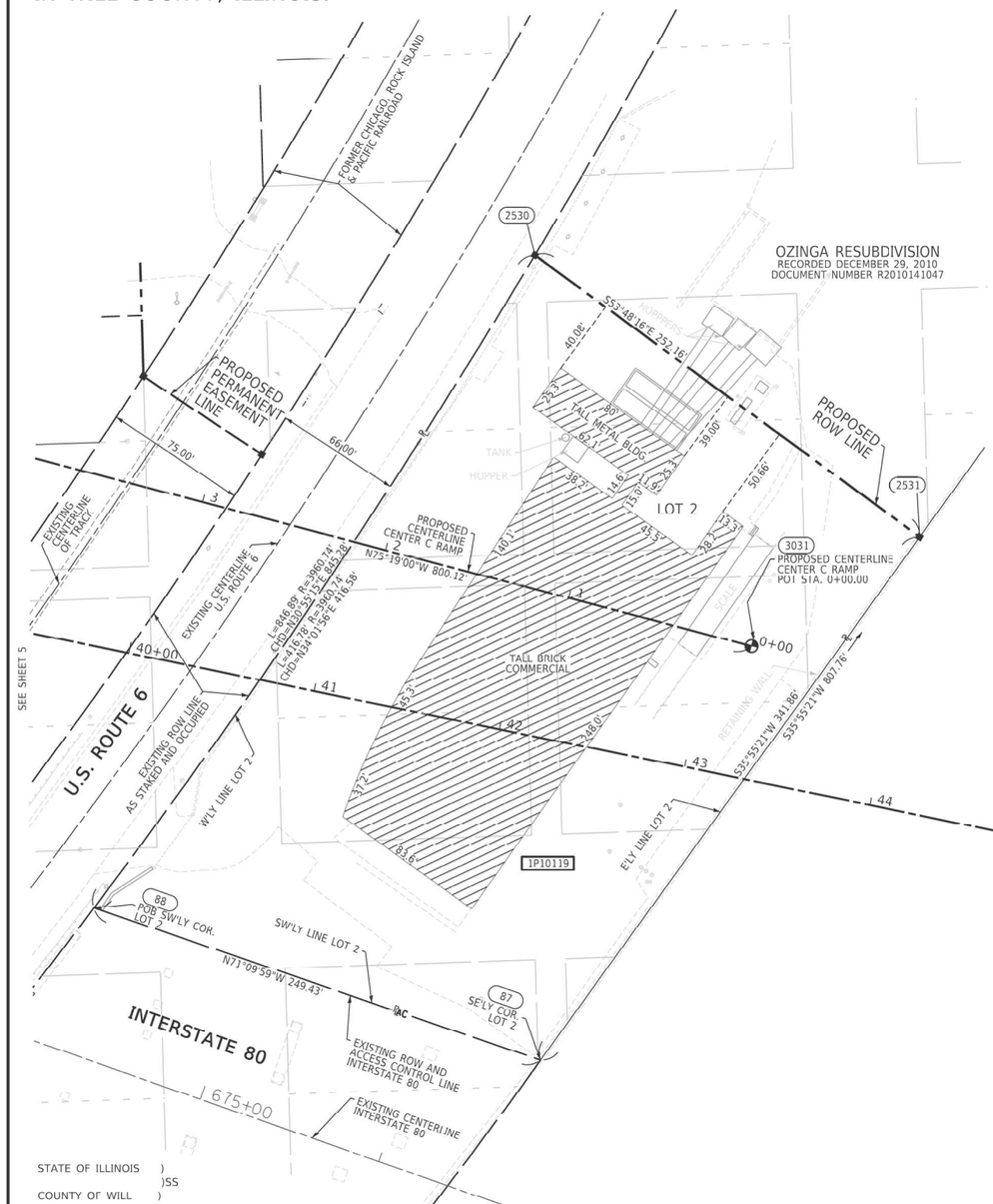

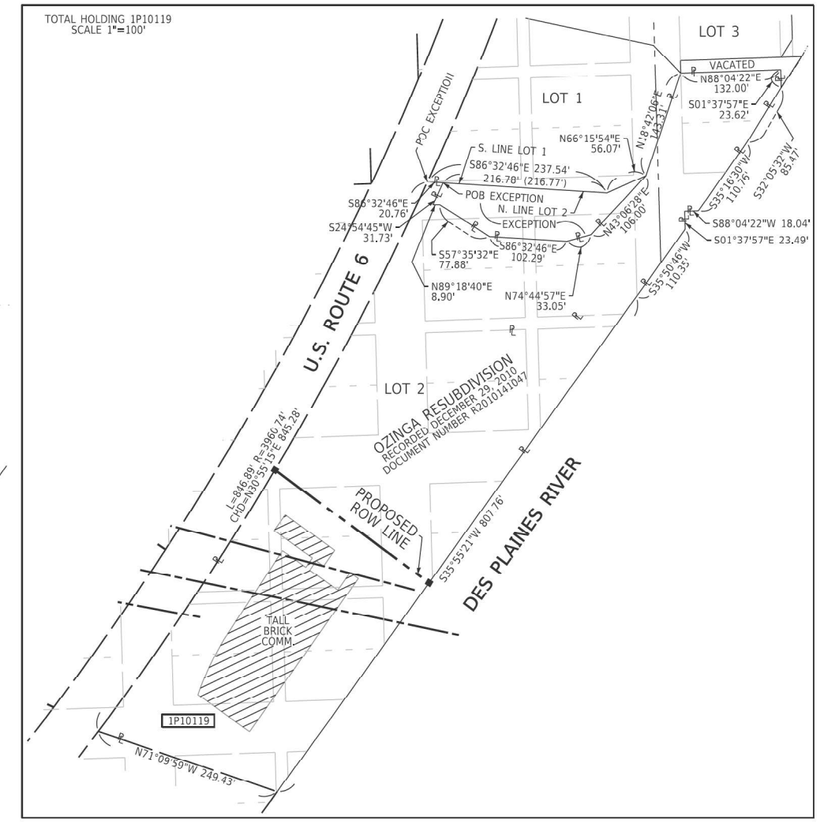

LEGEND

SECTION CORNER

QUARTER SECTION CORNER

GRAPHIC SCALE
FEET
SCALE: 1" = 40'

	SECTION / QUARTER SECTION LINE
	PLATTED LOT LINES
	PROPERTY (DEED) LINE
APL	APPARENT PROPERTY LINE
	EXISTING CENTERLINE
	PROPOSED CENTERLINE
	EXISTING RIGHT OF WAY LINE
	PROPOSED RIGHT OF WAY LINE
	EXISTING EASEMENT
	PROPOSED EASEMENT
AC	EXISTING ACCESS CONTROL LINE
AC	PROPOSED ACCESS CONTROL LINE
129.32'	MEASURED DIMENSION
129.32' (COMP)	COMPUTED DIMENSION
(129.32')	RECORDED DIMENSION
	EXISTING BUILDING

- IRON PIPE OR ROD FOUND
- "MAG" NAIL SET
- CUT CROSS FOUND OR SET
- 5/8" REBAR SET
- STAKING OF PROPOSED RIGHT OF WAY. SET DIVISION OF HIGHWAYS SURVEY MARKER TO MONUMENT THE POSITION SHOWN. IDENTIFIED BY INSCRIPTION DATA AND SURVEYORS REGISTRATION NUMBER.
- M STAKING OF PROPOSED RIGHT OF WAY IN CULTIVATED AREAS. BURIED 5/8 INCH METAL ROD 20 INCHES BELOW GROUND TO MARK FUTURE SURVEY MARKER POSITION IDENTIFIED BY COLORED PLASTIC CAP BEARING SURVEYORS REGISTRATION NUMBER.
- PERMANENT SURVEY MARKER, I.D.O.T. STANDARD 667101.02 (TO BE SET BY OTHERS)
- RIGHT OF WAY STAKING PROPOSED TO BE SET

SURVEY NOTES:
1. ALL DIMENSIONS ARE MEASURED UNLESS OTHERWISE SPECIFIED.
2. BEARING, DISTANCES, AND COORDINATES SHOWN HEREON REFERENCE THE ILLINOIS STATE PLANE COORDINATE SYSTEM, EAST ZONE, NORTH AMERICAN DATUM OF 1983 (2011 ADJUSTMENT) "GRID". COORDINATES ARE FIXED HOLDING THE PUBLISHED NAD83(2011) VALUES FOR NGS CONTROL MONUMENTS WILL COUNTY GPS 713 (PID-AE2569), WILL COUNTY GPS 716 (PID-AE2570) AND WILL COUNTY GPS 718 (PID-AE2571).
3. ALL MEASURED AND CALCULATED DISTANCES ARE "GRID" NOT "GROUND". TO OBTAIN GROUND DISTANCES, DIVIDE GRID DISTANCES SHOWN BY THE COMBINATION FACTOR OF 0.99995667.
4. AREAS SHOWN ON THIS PLAT ARE "GROUND".
5. FIELD SURVEY COMPLETED IN DECEMBER 2021.

STATE OF ILLINOIS)
)SS
COUNTY OF WILL)

THIS IS TO CERTIFY THAT I, DAVID A. CLAASSEN, AN ILLINOIS PROFESSIONAL LAND SURVEYOR, (WE, CLAASSEN, WHITE & ASSOCIATES, P.C. AN ILLINOIS PROFESSIONAL DESIGN FIRM LAND SURVEYING CORPORATION, NUMBER 184-004039,) HAVE SURVEYED THE PLAT OF HIGHWAYS SHOWN HEREON IN SECTION 16, TOWNSHIP 35 NORTH, RANGE 10 EAST OF THE THIRD PRINCIPAL MERIDIAN, WILL COUNTY, THAT THE SURVEY IS TRUE AND COMPLETE AS SHOWN TO THE BEST OF MY KNOWLEDGE AND BELIEF, THAT THE PLAT CORRECTLY REPRESENTS SAID SURVEY, THAT ALL MONUMENTS FOUND AND ESTABLISHED ARE OF PERMANENT QUALITY AND OCCUPY THE POSITIONS SHOWN THEREON AND THAT THE MONUMENTS ARE SUFFICIENT TO ENABLE THE SURVEY TO BE RETRACED, MADE FOR THE DEPARTMENT OF TRANSPORTATION, STATE OF ILLINOIS.

DATED AT _____, ILLINOIS THIS__ DAY OF _____ 2024 A.D.

ILLINOIS PROFESSIONAL LAND SURVEYOR NO. 035-002962
LICENSE EXPIRATION DATE: NOVEMBER 30, 2026

THIS PROFESSIONAL SERVICE CONFORMS TO THE CURRENT ILLINOIS MINIMUM STANDARDS FOR A BOUNDARY SURVEY.

STATE OF ILLINOIS · DAVID A. CLAASSEN · JOLIET, IL · NO. 2962 · PROFESSIONAL LAND SURVEYOR

PROJECT COORDINATES
ILLINOIS STATE PLANE, EAST ZONE, NAD83 (2011)

COORDINATE TABLE ~ INTERSTATE 80

PT.NO.	STATION	OFFSET	NORTHING	EASTING
88	40+09.13	135.93' RT.	1,764,996.1451	1,049,921.7718
2530	41+67.92	249.20' LT.	1,765,341.3780	1,050,154.9166
87	42+56.59	167.23' RT.	1,764,915.6241	1,050,157.8482
3031	43+21.70	70.00' LT.	1,765,134.8645	1,050,269.4297
2531	43+97.25	144.35' LT.	1,765,192.4647	1,050,358.4131

PARCEL NUMBER	TOTAL HOLDINGS ACRES	PART TAKEN ACRES	AREA IN EXISTING R.O.W. ACRES	REMAINDER AREA ACRES	EASEMENT AREA		PARCEL INDEX NUMBER
					ACRES	SQUARE FEET	
1P10119	5.685	2.106	0.000	3.579			30-07-16-306-007

REVISION DATE: / / REVISION MADE BY:

IDOT USE ONLY

APPROVED
By William Wright at 2:51 pm, Nov 13, 2024

CWA SURVEY

CLAASSEN, WHITE & ASSOCIATES, P.C.
LAND SURVEYORS
121 AIRPORT DRIVE, UNIT I, JOLIET, ILLINOIS 60431
(815) 744-3720 claassenwhite@cwasurvey.com
CWA Job #7577

PLAT OF HIGHWAYS
STATE OF ILLINOIS
DEPARTMENT OF TRANSPORTATION
I-80

LIMITS: RIDGE ROAD TO US 30 COUNTY: WILL
SECTION: JOB NO.: R-91-016-20
STA. 40+00.00 TO STA. 51+00.00
SCALE: 1" = 40' SHEET 411 OF 1230 SHEETS

BUREAU OF LAND ACQUISITION
201 WEST CENTER COURT
SCHAUMBURG, ILLINOIS 60196

PART OF THE SE 1/4 OF SECTION 16, TWP. 35 N., R. 10 E. OF THE 3RD. P.M., IN WILL COUNTY, ILLINOIS.

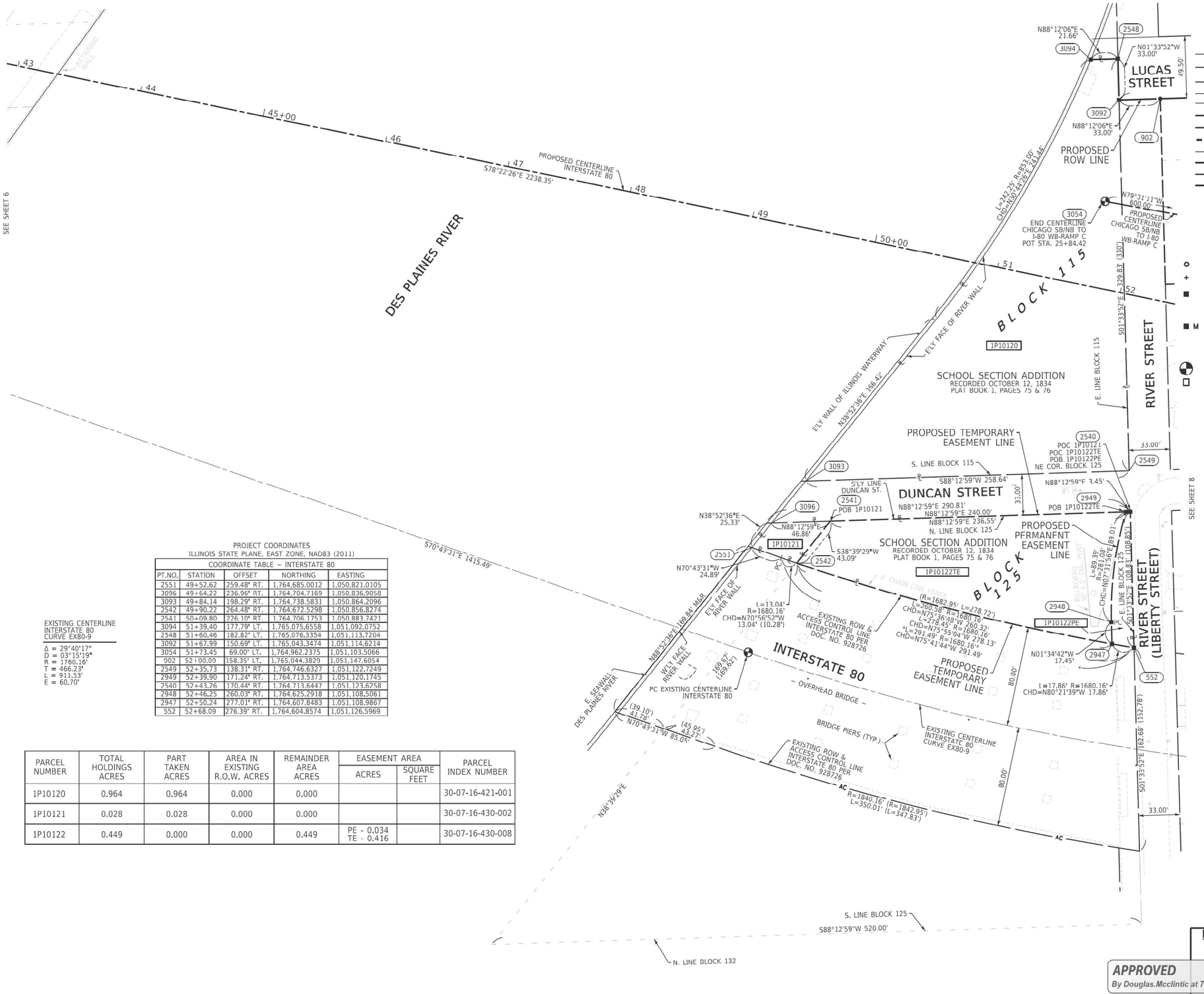

LEGEND

SECTION CORNER

QUARTER SECTION CORNER

GRAPHIC SCALE FEET

SCALE: 1" = 40'

	SECTION / QUARTER SECTION LINE
	PLATTED LOT LINES
APL	PROPERTY (DEED) LINE
	APPARENT PROPERTY LINE
	EXISTING CENTERLINE
	PROPOSED CENTERLINE
	EXISTING RIGHT OF WAY LINE
	PROPOSED RIGHT OF WAY LINE
	EXISTING EASEMENT
	PROPOSED EASEMENT
AC	EXISTING ACCESS CONTROL LINE
AC	PROPOSED ACCESS CONTROL LINE
129.32'	MEASURED DIMENSION
129.32' (COMP)	COMPUTED DIMENSION
(129.32')	RECORDED DIMENSION
	EXISTING BUILDING

IRON PIPE OR ROD FOUND — "MAG" NAIL SET

CUT CROSS FOUND OR SET — 5/8" REBAR SET

STAKING OF PROPOSED RIGHT OF WAY. SET DIVISION OF HIGHWAYS SURVEY MARKER TO MONUMENT THE POSITION SHOWN. IDENTIFIED BY INSCRIPTION DATA AND SURVEYORS REGISTRATION NUMBER.

STAKING OF PROPOSED RIGHT OF WAY IN CULTIVATED AREAS. BURIED 5/8 INCH METAL ROD 20 INCHES BELOW GROUND TO MARK FUTURE SURVEY MARKER POSITION IDENTIFIED BY COLORED PLASTIC CAP BEARING SURVEYORS REGISTRATION NUMBER.

PERMANENT SURVEY MARKER, I.D.O.T. STANDARD 667101.02 (TO BE SET BY OTHERS)

RIGHT OF WAY STAKING PROPOSED TO BE SET

SURVEY NOTES:
1. ALL DIMENSIONS ARE MEASURED UNLESS OTHERWISE SPECIFIED.
2. BEARING, DISTANCES, AND COORDINATES SHOWN HEREON REFERENCE THE ILLINOIS STATE PLANE COORDINATE SYSTEM, EAST ZONE, NORTH AMERICAN DATUM OF 1983 (2011 ADJUSTMENT) "GRID". COORDINATES ARE FIXED HOLDING THE PUBLISHED NAD83(2011) VALUES FOR NGS CONTROL MONUMENTS WILL COUNTY GPS 713 (PID-AE2569), WILL COUNTY GPS 716 (PID-AE2570) AND WILL COUNTY GPS 718 (PID-AE2571).
3. ALL MEASURED AND CALCULATED DISTANCES ARE "GRID" NOT "GROUND". TO OBTAIN GROUND DISTANCES, DIVIDE GRID DISTANCES SHOWN BY THE COMBINATION FACTOR OF 0.99995667.
4. AREAS SHOWN ON THIS PLAT ARE "GROUND".
5. FIELD SURVEY COMPLETED IN DECEMBER 2021.

STATE OF ILLINOIS)
)SS
COUNTY OF WILL)

THIS IS TO CERTIFY THAT I, DAVID A. CLAASSEN, AN ILLINOIS PROFESSIONAL LAND SURVEYOR, (WE, CLAASSEN, WHITE & ASSOCIATES, P.C. AN ILLINOIS PROFESSIONAL DESIGN FIRM LAND SURVEYING CORPORATION, NUMBER 184-004039,) HAVE SURVEYED THE PLAT OF HIGHWAYS SHOWN HEREON IN SECTION 16, TOWNSHIP 35 NORTH, RANGE 10 EAST OF THE THIRD PRINCIPAL MERIDIAN, WILL COUNTY, THAT THE SURVEY IS TRUE AND COMPLETE AS SHOWN TO THE BEST OF MY KNOWLEDGE AND BELIEF, THAT THE PLAT CORRECTLY REPRESENTS SAID SURVEY, THAT ALL MONUMENTS FOUND AND ESTABLISHED ARE OF PERMANENT QUALITY AND OCCUPY THE POSITIONS SHOWN THEREON AND THAT THE MONUMENTS ARE SUFFICIENT TO ENABLE THE SURVEY TO BE RETRACED, MADE FOR THE DEPARTMENT OF TRANSPORTATION, STATE OF ILLINOIS.

DATED AT _____, ILLINOIS THIS___ DAY OF _____ 2025 A.D.

ILLINOIS PROFESSIONAL LAND SURVEYOR NO. 035-002962
LICENSE EXPIRATION DATE: NOVEMBER 30, 2026

THIS PROFESSIONAL SERVICE CONFORMS TO THE CURRENT ILLINOIS MINIMUM STANDARDS FOR A BOUNDARY SURVEY.

STATE OF ILLINOIS PROFESSIONAL LAND SURVEYOR DAVID A. CLAASSEN JOLIET, IL NO. 2962

CWA SURVEY
CLAASSEN, WHITE & ASSOCIATES, P.C.
LAND SURVEYORS
121 AIRPORT DRIVE, UNIT I, JOLIET, ILLINOIS 60431
(815) 744-3720 claassenwhite@cwasurvey.com
CWA Job #7577

EXISTING CENTERLINE INTERSTATE 80 CURVE EX80-9

Δ = 29°40'17"
D = 03°15'19"
R = 1760.16'
T = 466.23'
L = 911.53'
E = 60.70'

PROJECT COORDINATES
ILLINOIS STATE PLANE, EAST ZONE, NAD83 (2011)

COORDINATE TABLE ~ INTERSTATE 80

PT.NO.	STATION	OFFSET	NORTHING	EASTING
2551	49+52.62	259.48' RT.	1,764,685.0012	1,050,821.0105
3096	49+64.22	236.96' RT.	1,764,704.7169	1,050,836.9058
3093	49+84.14	198.29' RT.	1,764,738.5831	1,050,864.2096
2542	49+90.22	264.48' RT.	1,764,672.5298	1,050,856.8274
2541	50+09.80	226.10' RT.	1,764,706.1753	1,050,883.7421
3094	51+39.40	177.79' LT.	1,765,075.6558	1,051,092.0752
2548	51+60.46	182.82' LT.	1,765,076.3354	1,051,113.7204
3092	51+67.99	150.69' LT.	1,765,043.3474	1,051,114.6214
3054	51+73.45	69.00' LT.	1,764,962.2375	1,051,103.5066
902	52+00.09	158.35' LT.	1,765,044.3820	1,051,147.6054
2549	52+35.73	138.31' RT.	1,764,746.6327	1,051,122.7249
2949	52+39.90	171.24' RT.	1,764,713.5373	1,051,120.1745
2540	52+43.26	170.44' RT.	1,764,713.6447	1,051,123.6258
2948	52+46.25	260.03' RT.	1,764,625.2918	1,051,108.5061
2947	52+50.24	277.01' RT.	1,764,607.8483	1,051,108.9867
552	52+68.09	276.39' RT.	1,764,604.8574	1,051,126.5969

PARCEL NUMBER	TOTAL HOLDINGS ACRES	PART TAKEN ACRES	AREA IN EXISTING R.O.W. ACRES	REMAINDER AREA ACRES	EASEMENT AREA		PARCEL INDEX NUMBER
					ACRES	SQUARE FEET	
1P10120	0.964	0.964	0.000	0.000			30-07-16-421-001
1P10121	0.028	0.028	0.000	0.000			30-07-16-430-002
1P10122	0.449	0.000	0.000	0.449	PE - 0.034 TE - 0.416		30-07-16-430-008

IDOT USE ONLY

APPROVED
By Douglas.Mcclintic at 7:30 am, Jan 28, 2025

REVISION DATE: / / REVISION MADE BY:

PLAT OF HIGHWAYS

STATE OF ILLINOIS
DEPARTMENT OF TRANSPORTATION
I-80

LIMITS: RIDGE ROAD TO US 30 COUNTY: WILL
SECTION: JOB NO.: R-91-016-20
STA. 43+00.00 TO STA. 52+68.09
SCALE: 1" = 40' SHEET 412 OF 1230 SHEETS

BUREAU OF LAND ACQUISITION
201 WEST CENTER COURT
SCHAUMBURG, ILLINOIS 60196

PART OF THE SE 1/4 OF SECTION 16, TWP. 35 N., R. 10 E. OF THE 3RD. P.M., IN WILL COUNTY, ILLINOIS.

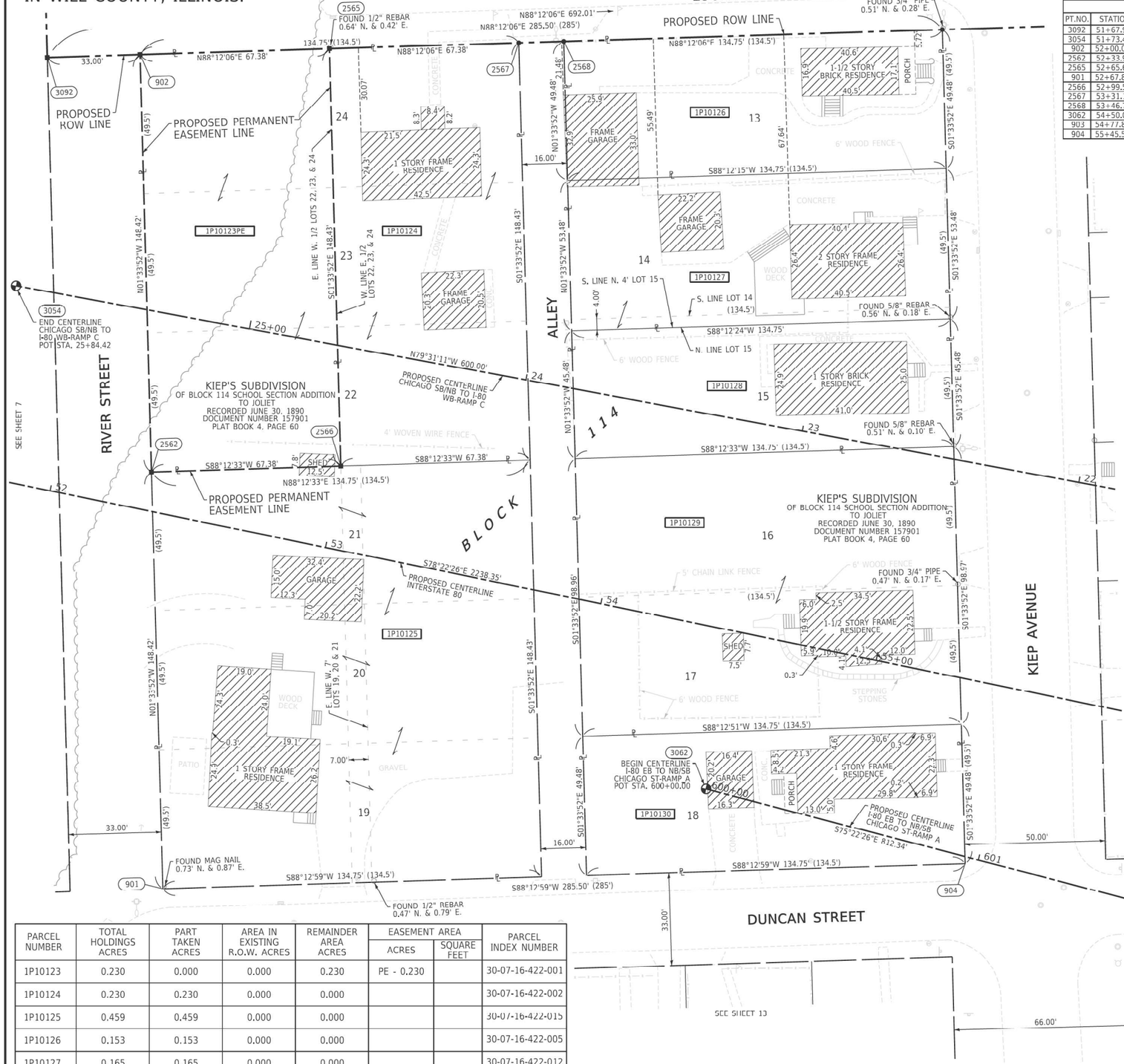

PROJECT COORDINATES
ILLINOIS STATE PLANE, EAST ZONE, NAD83 (2011)

COORDINATE TABLE ~ I-80

PT.NO.	STATION	OFFSET	NORTHING	EASTING
3092	51+67.99	150.69' LT.	1,765,043.3474	1,051,114.6214
3054	51+73.45	69.00' LT.	1,764,962.2375	1,051,103.5066
902	52+00.09	158.35' LT.	1,765,044.3829	1,051,147.6054
2562	52+33.96	13.85' LT.	1,764,896.0214	1,051,151.6573
2565	52+65.63	173.99' LT.	1,765,046.4972	1,051,214.9482
901	52+67.83	130.66' RT.	1,764,747.6597	1,051,155.7091
2566	52+99.50	29.48' LT.	1,764,898.1270	1,051,219.0003
2567	53+31.16	189.63' LT.	1,765,048.6115	1,051,282.2909
2568	53+46.72	193.35' LT.	1,765,049.1136	1,051,298.2832
3062	54+50.00	57.00' RT.	1,764,783.0918	1,051,348.9892
903	54+77.80	224.63' LT.	1,765,053.3422	1,051,432.9687
904	55+45.55	64.44' RT.	1,764,756.5454	1,051,441.0745

LEGEND

SECTION CORNER

QUARTER SECTION CORNER

GRAPHIC SCALE
FEET
SCALE: 1" = 20'

- SECTION / QUARTER SECTION LINE
- PLATTED LOT LINES
- PROPERTY (DEED) LINE
- APL — APPARENT PROPERTY LINE
- EXISTING CENTERLINE
- PROPOSED CENTERLINE
- EXISTING RIGHT OF WAY LINE
- PROPOSED RIGHT OF WAY LINE
- EXISTING EASEMENT
- PROPOSED EASEMENT
- AC — EXISTING ACCESS CONTROL LINE
- AC — PROPOSED ACCESS CONTROL LINE
- 129.32' — MEASURED DIMENSION
- 129.32' (COMP) — COMPUTED DIMENSION
- (129.32') — RECORDED DIMENSION
- EXISTING BUILDING
- IRON PIPE OR ROD FOUND
- "MAG" NAIL SET
- CUT CROSS FOUND OR SET
- 5/8" REBAR SET
- STAKING OF PROPOSED RIGHT OF WAY. SET DIVISION OF HIGHWAYS SURVEY MARKER TO MONUMENT THE POSITION SHOWN. IDENTIFIED BY INSCRIPTION DATA AND SURVEYORS REGISTRATION NUMBER.
- M — STAKING OF PROPOSED RIGHT OF WAY IN CULTIVATED AREAS. BURIED 5/8 INCH METAL ROD 20 INCHES BELOW GROUND TO MARK FUTURE SURVEY MARKER POSITION IDENTIFIED BY COLORED PLASTIC CAP BEARING SURVEYORS REGISTRATION NUMBER.
- PERMANENT SURVEY MARKER, I.D.O.T. STANDARD 667101.02 (TO BE SET BY OTHERS)
- RIGHT OF WAY STAKING PROPOSED TO BE SET

SURVEY NOTES:
1. ALL DIMENSIONS ARE MEASURED UNLESS OTHERWISE SPECIFIED.
2. BEARING, DISTANCES, AND COORDINATES SHOWN HEREON REFERENCE THE ILLINOIS STATE PLANE COORDINATE SYSTEM, EAST ZONE, NORTH AMERICAN DATUM OF 1983 (2011 ADJUSTMENT) "GRID". COORDINATES ARE FIXED HOLDING THE PUBLISHED NAD83(2011) VALUES FOR NGS CONTROL MONUMENTS WILL COUNTY GPS 713 (PID-AE2569), WILL COUNTY GPS 716 (PID-AE2570) AND WILL COUNTY GPS 718 (PID-AE2571).
3. ALL MEASURED AND CALCULATED DISTANCES ARE "GRID" NOT "GROUND". TO OBTAIN GROUND DISTANCES, DIVIDE GRID DISTANCES SHOWN BY THE COMBINATION FACTOR OF 0.99995667.
4. AREAS SHOWN ON THIS PLAT ARE "GROUND".
5. FIELD SURVEY COMPLETED IN DECEMBER 2021.

STATE OF ILLINOIS)
)SS
COUNTY OF WILL)

THIS IS TO CERTIFY THAT I, DAVID A. CLAASSEN, AN ILLINOIS PROFESSIONAL LAND SURVEYOR, (WE, CLAASSEN, WHITE & ASSOCIATES, P.C. AN ILLINOIS PROFESSIONAL DESIGN FIRM LAND SURVEYING CORPORATION, NUMBER 184-004039,) HAVE SURVEYED THE PLAT OF HIGHWAYS SHOWN HEREON IN SECTION 16, TOWNSHIP 35 NORTH, RANGE 10 EAST OF THE THIRD PRINCIPAL MERIDIAN, WILL COUNTY, THAT THE SURVEY IS TRUE AND COMPLETE AS SHOWN TO THE BEST OF MY KNOWLEDGE AND BELIEF, THAT THE PLAT CORRECTLY REPRESENTS SAID SURVEY, THAT ALL MONUMENTS FOUND AND ESTABLISHED ARE OF PERMANENT QUALITY AND OCCUPY THE POSITIONS SHOWN THEREON AND THAT THE MONUMENTS ARE SUFFICIENT TO ENABLE THE SURVEY TO BE RETRACED, MADE FOR THE DEPARTMENT OF TRANSPORTATION, STATE OF ILLINOIS.

DATED AT _____, ILLINOIS THIS __ DAY OF _____ 2024 A.D.

ILLINOIS PROFESSIONAL LAND SURVEYOR NO. 035-002962
LICENSE EXPIRATION DATE: NOVEMBER 30, 2026

THIS PROFESSIONAL SERVICE CONFORMS TO THE CURRENT ILLINOIS MINIMUM STANDARDS FOR A BOUNDARY SURVEY.

STATE OF ILLINOIS · DAVID A. CLAASSEN · JOLIET, IL · NO. 2962 · PROFESSIONAL LAND SURVEYOR

CWA SURVEY
CLAASSEN, WHITE & ASSOCIATES, P.C.
LAND SURVEYORS
121 AIRPORT DRIVE, UNIT 1, JOLIET, ILLINOIS 60431
(815) 744-3720 cbasserwhite@cwasurvey.com
CWA Job #7577

PARCEL NUMBER	TOTAL HOLDINGS ACRES	PART TAKEN ACRES	AREA IN EXISTING R.O.W. ACRES	REMAINDER AREA ACRES	EASEMENT AREA		PARCEL INDEX NUMBER
					ACRES	SQUARE FEET	
1P10123	0.230	0.000	0.000	0.230	PE - 0.230		30-07-16-422-001
1P10124	0.230	0.230	0.000	0.000			30-07-16-422-002
1P10125	0.459	0.459	0.000	0.000			30-07-16-422-015
1P10126	0.153	0.153	0.000	0.000			30-07-16-422-005
1P10127	0.165	0.165	0.000	0.000			30-07-16-422-012
1P10128	0.141	0.141	0.000	0.000			30-07-16-422-008
1P10129	0.306	0.306	0.000	0.000			30-07-16-422-009 30-07-16-422-010
1P10130	0.153	0.153	0.000	0.000			30-07-16-422-011

REVISION DATE: / / REVISION MADE BY:

IDOT USE ONLY

APPROVED
By William Wright at 2:52 pm, Nov 13, 2024

PLAT OF HIGHWAYS

STATE OF ILLINOIS
DEPARTMENT OF TRANSPORTATION
I–80

LIMITS: RIDGE ROAD TO US 30 COUNTY: WILL
SECTION: JOB NO.: R-91-016-20
STA. 51+67.99 TO STA. 55+45.55
SCALE: 1" = 20' SHEET 413 OF 1230 SHEETS

BUREAU OF LAND ACQUISITION
201 WEST CENTER COURT
SCHAUMBURG, ILLINOIS 60196

PART OF THE SE 1/4 OF SECTION 16, TWP. 35 N., R. 10 E. OF THE 3RD. P.M.,
IN WILL COUNTY, ILLINOIS.

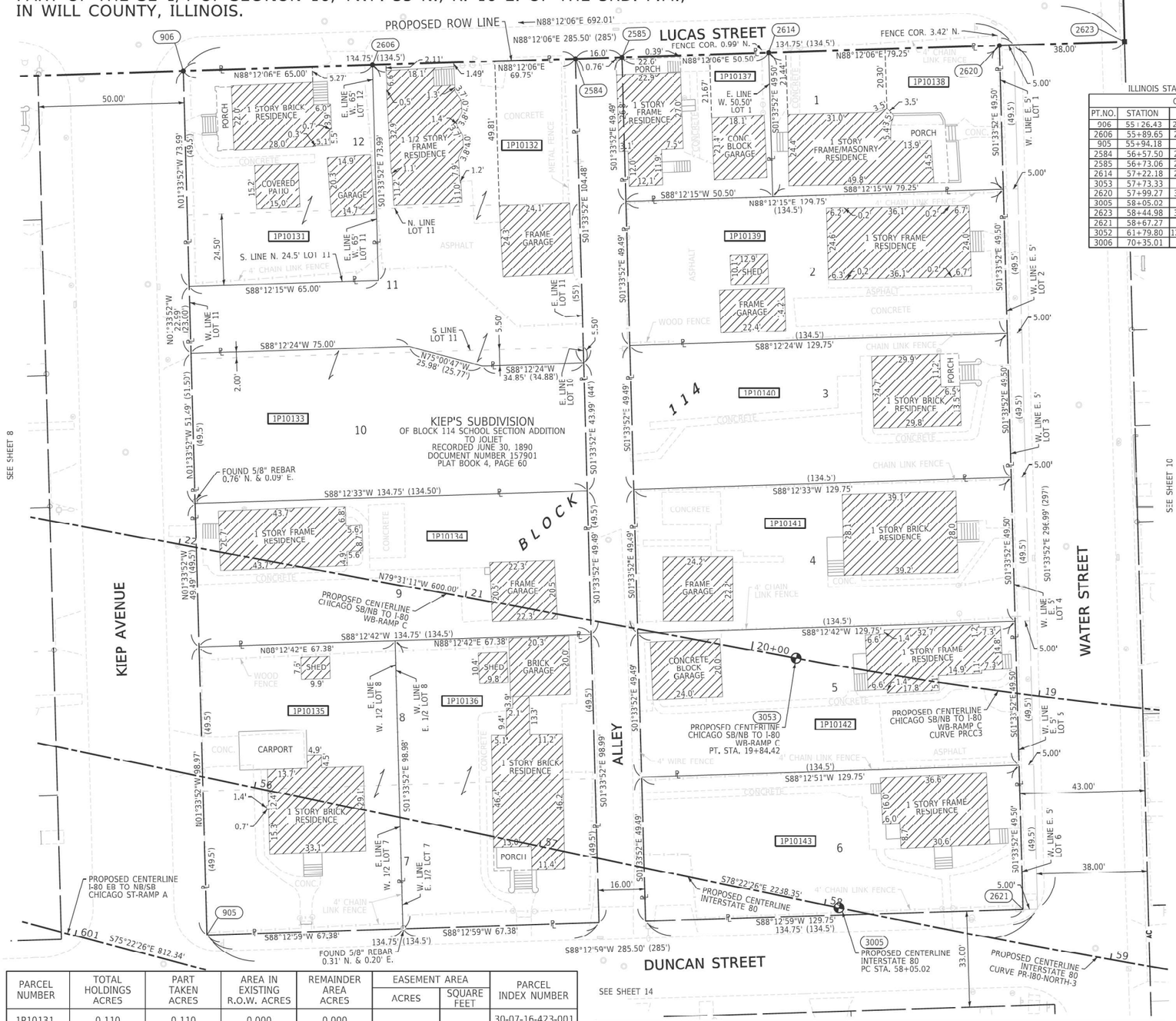

PROJECT COORDINATES
ILLINOIS STATE PLANE, EAST ZONE, NAD83 (2011)

COORDINATE TABLE ~ I-80

PT.NO.	STATION	OFFSET	NORTHING	EASTING
906	55+26.43	236.24' LT.	1,765,054.9112	1,051,482.9445
2606	55+89.65	251.33' LT.	1,765,056.9510	1,051,547.9131
905	55+94.18	52.85' RT.	1,764,758.1015	1,051,491.0506
2584	56+57.50	267.52' LT.	1,765,059.1398	1,051,617.6301
2585	56+73.06	271.24' LT.	1,765,059.6419	1,051,633.6223
2614	57+22.18	282.96' LT.	1,765,061.2266	1,051,684.0979
3053	57+73.33	81.00' LT.	1,764,853.0995	1,051,693.4972
2620	57+99.27	301.36' LT.	1,765,063.7136	1,051,763.3103
3005	58+05.02	0.00' RT.	1,764,767.3779	1,051,708.2118
2623	58+44.98	311.12' LT.	1,765,065.0630	1,051,806.2895
2621	58+67.27	11.60' LT.	1,764,766.8315	1,051,771.4184
3052	61+79.80	120.06' RT.	1,764,833.1135	1,052,089.1716
3006	70+35.01	0.00' RT.	1,764,754.2662	1,052,930.5747

PROPOSED CENTERLINE
CHICAGO SB/NB TO I-80
WB-RAMP C - CURVE PRCC3

P.I. STA= 17+86.92
Δ= 15°10'38"
D= 03°49'11"
R= 1500.00'
T= 199.84'
L= 397.34'
E= 13.25'
(3052) P.C.C. STA= 15+87.08
(3053) P.T. STA= 19+84.42

PROPOSED CENTERLINE
INTERSTATE 80
CURVE PR-I80-NORTH-3

P.I. STA= 64+27.70
Δ= 22°01'22"
D= 01°47'26"
R= 3200.00'
T= 622.68'
L= 1229.99'
E= 60.02'
(3005) P.C. STA= 58+05.02
(3006) P.T. STA= 70+35.01

LEGEND

SECTION CORNER
QUARTER SECTION CORNER

SECTION / QUARTER SECTION LINE
PLATTED LOT LINES
PROPERTY (DEED) LINE
APL — APPARENT PROPERTY LINE
EXISTING CENTERLINE
PROPOSED CENTERLINE
EXISTING RIGHT OF WAY LINE
PROPOSED RIGHT OF WAY LINE
EXISTING EASEMENT
PROPOSED EASEMENT
AC — EXISTING ACCESS CONTROL LINE
AC — PROPOSED ACCESS CONTROL LINE
129.32' — MEASURED DIMENSION
129.32' (COMP) — COMPUTED DIMENSION
(129.32') — RECORDED DIMENSION
EXISTING BUILDING

GRAPHIC SCALE
FEET
SCALE: 1" = 20'

IRON PIPE OR ROD FOUND
"MAG" NAIL SET
CUT CROSS FOUND OR SET
5/8" REBAR SET

STAKING OF PROPOSED RIGHT OF WAY. SET DIVISION OF HIGHWAYS SURVEY MARKER TO MONUMENT THE POSITION SHOWN. IDENTIFIED BY INSCRIPTION DATA AND SURVEYORS REGISTRATION NUMBER.

STAKING OF PROPOSED RIGHT OF WAY IN CULTIVATED AREAS. BURIED 5/8 INCH METAL ROD 20 INCHES BELOW GROUND TO MARK FUTURE SURVEY MARKER POSITION IDENTIFIED BY COLORED PLASTIC CAP BEARING SURVEYORS REGISTRATION NUMBER.

PERMANENT SURVEY MARKER, I.D.O.T. STANDARD 667101.02 (TO BE SET BY OTHERS)

RIGHT OF WAY STAKING PROPOSED TO BE SET

SURVEY NOTES:
1. ALL DIMENSIONS ARE MEASURED UNLESS OTHERWISE SPECIFIED.
2. BEARING, DISTANCES, AND COORDINATES SHOWN HEREON REFERENCE THE ILLINOIS STATE PLANE COORDINATE SYSTEM, EAST ZONE, NORTH AMERICAN DATUM OF 1983 (2011 ADJUSTMENT) "GRID". COORDINATES ARE FIXED HOLDING THE PUBLISHED NAD83(2011) VALUES FOR NGS CONTROL MONUMENTS WILL COUNTY GPS 713 (PID-AE2569), WILL COUNTY GPS 716 (PID-AE2570) AND WILL COUNTY GPS 718 (PID-AE2571).
3. ALL MEASURED AND CALCULATED DISTANCES ARE "GRID" NOT "GROUND". TO OBTAIN GROUND DISTANCES, DIVIDE GRID DISTANCES SHOWN BY THE COMBINATION FACTOR OF 0.99995667.
4. AREAS SHOWN ON THIS PLAT ARE "GROUND".
5. FIELD SURVEY COMPLETED IN DECEMBER 2021.

STATE OF ILLINOIS)
)SS
COUNTY OF WILL)

THIS IS TO CERTIFY THAT I, DAVID A. CLAASSEN, AN ILLINOIS PROFESSIONAL LAND SURVEYOR, (WE, CLAASSEN, WHITE & ASSOCIATES, P.C. AN ILLINOIS PROFESSIONAL DESIGN FIRM LAND SURVEYING CORPORATION, NUMBER 184-004039,) HAVE SURVEYED THE PLAT OF HIGHWAYS SHOWN HEREON IN SECTION 16, TOWNSHIP 35 NORTH, RANGE 10 EAST OF THE THIRD PRINCIPAL MERIDIAN, WILL COUNTY, THAT THE SURVEY IS TRUE AND COMPLETE AS SHOWN TO THE BEST OF MY KNOWLEDGE AND BELIEF, THAT THE PLAT CORRECTLY REPRESENTS SAID SURVEY, THAT ALL MONUMENTS FOUND AND ESTABLISHED ARE OF PERMANENT QUALITY AND OCCUPY THE POSITIONS SHOWN THEREON AND THAT THE MONUMENTS ARE SUFFICIENT TO ENABLE THE SURVEY TO BE RETRACED, MADE FOR THE DEPARTMENT OF TRANSPORTATION, STATE OF ILLINOIS.

DATED AT _____, ILLINOIS THIS ___ DAY OF _____ 2024 A.D.

ILLINOIS PROFESSIONAL LAND SURVEYOR NO. 035-002962
LICENSE EXPIRATION DATE: NOVEMBER 30, 2026

THIS PROFESSIONAL SERVICE CONFORMS TO THE CURRENT ILLINOIS MINIMUM STANDARDS FOR A BOUNDARY SURVEY.

STATE OF ILLINOIS — DAVID A. CLAASSEN — JOLIET, IL — NO. 2962 — PROFESSIONAL LAND SURVEYOR

CWA SURVEY

CLAASSEN, WHITE & ASSOCIATES, P.C.
LAND SURVEYORS
121 AIRPORT DRIVE, UNIT 1, JOLIET, ILLINOIS 60431
(815) 744-3720 claassenwhite@cwdsurvey.com
CWA Job #7577

PARCEL NUMBER	TOTAL HOLDINGS ACRES	PART TAKEN ACRES	AREA IN EXISTING R.O.W. ACRES	REMAINDER AREA ACRES	EASEMENT AREA		PARCEL INDEX NUMBER
					ACRES	SQUARE FEET	
1P10131	0.110	0.110	0.000	0.000			30-07-16-423-001
1P10132	0.198	0.198	0.000	0.000			30-07-16-423-014
1P10133	0.151	0.151	0.000	0.000			30-07-16-423-004
1P10134	0.153	0.153	0.000	0.000			30-07-16-423-005
1P10135	0.153	0.153	0.000	0.000			30-07-16-423-006
1P10136	0.153	0.153	0.000	0.000			30-07-16-423-007
1P10137	0.057	0.057	0.000	0.000			30-07-16-423-015
1P10138	0.090	0.090	0.000	0.000			30-07-16-423-016

PARCEL NUMBER	TOTAL HOLDINGS ACRES	PART TAKEN ACRES	AREA IN EXISTING R.O.W. ACRES	REMAINDER AREA ACRES	EASEMENT AREA		PARCEL INDEX NUMBER
					ACRES	SQUARE FEET	
1P10139	0.147	0.147	0.000	0.000			30-07-16-423-009
1P10140	0.147	0.147	0.000	0.000			30-07-16-423-010
1P10141	0.147	0.147	0.000	0.000			30-07-16-423-011
1P10142	0.147	0.147	0.000	0.000			30-07-16-423-012
1P10143	0.147	0.147	0.000	0.000			30-07-16-423-013

REVISION DATE: / / REVISION MADE BY:

IDOT USE ONLY

APPROVED
By William Wright at 2:52 pm, Nov 13, 2024

PLAT OF HIGHWAYS
STATE OF ILLINOIS
DEPARTMENT OF TRANSPORTATION
I–80

LIMITS: RIDGE ROAD TO US 30 COUNTY: WILL
SECTION: JOB NO.: R-91-016-20
STA. 55+26.43 TO STA. 59+00.00
SCALE: 1" = 20' SHEET 414 OF 1230 SHEETS

BUREAU OF LAND ACQUISITION
201 WEST CENTER COURT
SCHAUMBURG, ILLINOIS 60196

PART OF THE SE 1/4 OF SECTION 16, TWP. 35 N., R. 10 E. OF THE 3RD. P.M., IN WILL COUNTY, ILLINOIS.

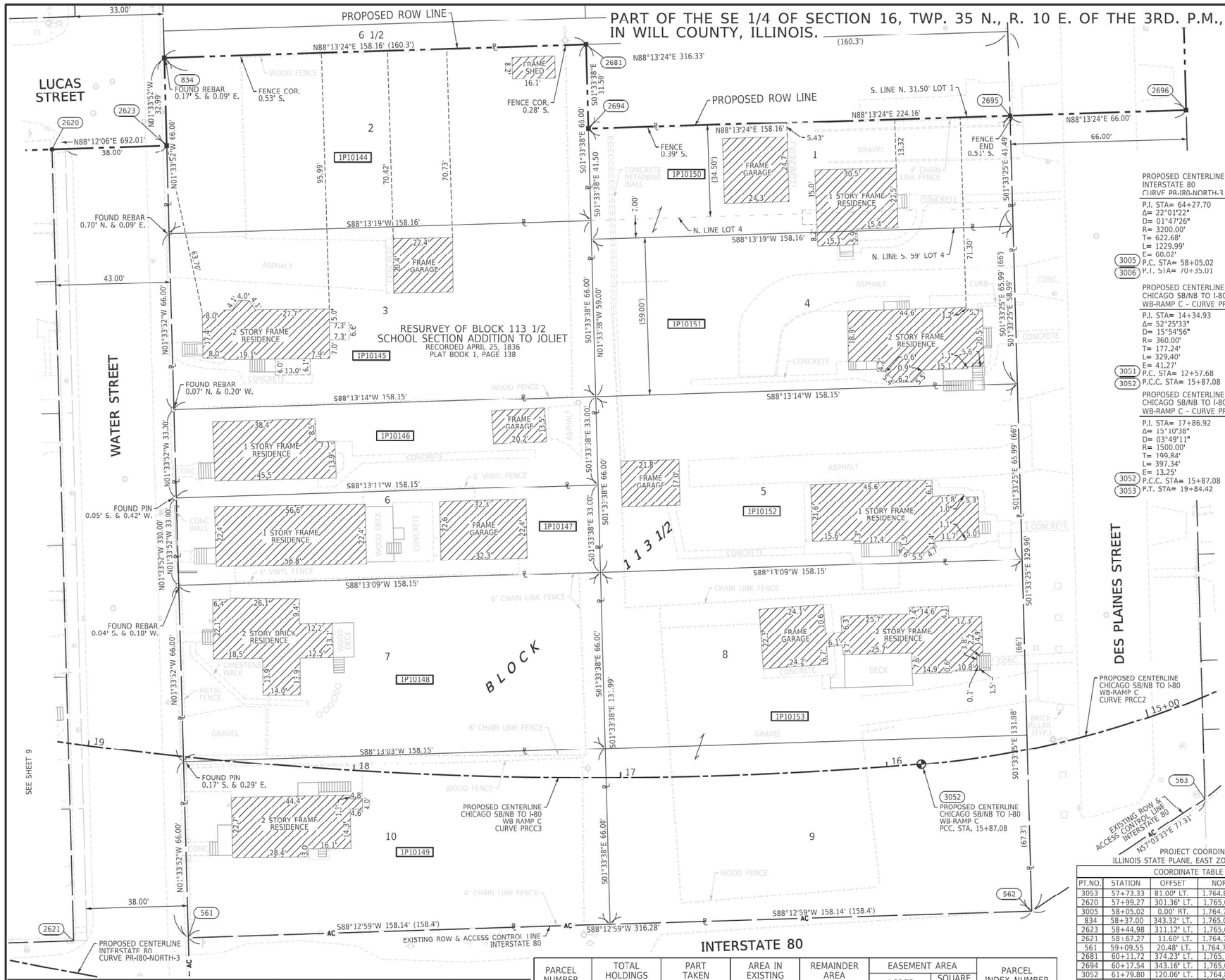

LEGEND

SECTION CORNER (9 10 16 15)

QUARTER SECTION CORNER (16 15)

GRAPHIC SCALE FEET (0 20)

SCALE: 1" = 20'

- SECTION / QUARTER SECTION LINE
- PLATTED LOT LINES
- PROPERTY (DEED) LINE
- APL — APPARENT PROPERTY LINE
- EXISTING CENTERLINE
- PROPOSED CENTERLINE
- EXISTING RIGHT OF WAY LINE
- PROPOSED RIGHT OF WAY LINE
- EXISTING EASEMENT
- PROPOSED EASEMENT
- AC — EXISTING ACCESS CONTROL LINE
- AC — PROPOSED ACCESS CONTROL LINE
- 129.32' — MEASURED DIMENSION
- 129.32' (COMP) — COMPUTED DIMENSION
- (129.32') — RECORDED DIMENSION
- EXISTING BUILDING
- IRON PIPE OR ROD FOUND
- "MAG" NAIL SET
- CUT CROSS FOUND OR SET
- 5/8" REBAR SET
- STAKING OF PROPOSED RIGHT OF WAY. SET DIVISION OF HIGHWAYS SURVEY MARKER TO MONUMENT THE POSITION SHOWN. IDENTIFIED BY INSCRIPTION DATA AND SURVEYORS REGISTRATION NUMBER.
- M — STAKING OF PROPOSED RIGHT OF WAY IN CULTIVATED AREAS. BURIED 5/8 INCH METAL ROD 20 INCHES BELOW GROUND TO MARK FUTURE SURVEY MARKER POSITION IDENTIFIED BY COLORED PLASTIC CAP BEARING SURVEYORS REGISTRATION NUMBER.
- PERMANENT SURVEY MARKER, I.D.O.T. STANDARD 667101.02 (TO BE SET BY OTHERS)
- RIGHT OF WAY STAKING PROPOSED TO BE SET

PROPOSED CENTERLINE INTERSTATE 80
CURVE PR-I80-NORTH-3

P.I. STA= 64+27.70
Δ= 22°01'22"
D= 01°47'26"
R= 3200.00'
T= 622.68'
L= 1229.99'
E= 60.02'
3005 P.C. STA= 58+05.02
3006 P.T. STA= 70+35.01

PROPOSED CENTERLINE CHICAGO SB/NB TO I-80 WB-RAMP C - CURVE PRCC2

P.I. STA= 14+34.93
Δ= 52°25'33"
D= 15°54'56"
R= 360.00'
T= 177.24'
L= 329.40'
E= 41.27'
3051 P.C. STA= 12+57.68
3052 P.C.C. STA= 15+87.08

PROPOSED CENTERLINE CHICAGO SB/NB TO I-80 WB-RAMP C - CURVE PRCC3

P.I. STA= 17+86.92
Δ= 15°10'38"
D= 03°49'11"
R= 1500.00'
T= 199.84'
L= 397.34'
E= 13.25'
3052 P.C.C. STA= 15+87.08
3053 P.T. STA= 19+84.42

SURVEY NOTES:

1. ALL DIMENSIONS ARE MEASURED UNLESS OTHERWISE SPECIFIED.
2. BEARING, DISTANCES, AND COORDINATES SHOWN HEREON REFERENCE THE ILLINOIS STATE PLANE COORDINATE SYSTEM, EAST ZONE, NORTH AMERICAN DATUM OF 1983 (2011 ADJUSTMENT) "GRID". COORDINATES ARE FIXED HOLDING THE PUBLISHED NAD83(2011) VALUES FOR NGS CONTROL MONUMENTS WILL COUNTY GPS 713 (PID-AE2569), WILL COUNTY GPS 716 (PID-AE2570) AND WILL COUNTY GPS 718 (PID-AE2571).
3. ALL MEASURED AND CALCULATED DISTANCES ARE "GRID" NOT "GROUND". TO OBTAIN GROUND DISTANCES, DIVIDE GRID DISTANCES SHOWN BY THE COMBINATION FACTOR OF 0.99995667.
4. AREAS SHOWN ON THIS PLAT ARE "GROUND".
5. FIELD SURVEY COMPLETED IN DECEMBER 2021.

STATE OF ILLINOIS)
)SS
COUNTY OF WILL)

THIS IS TO CERTIFY THAT I, DAVID A. CLAASSEN, AN ILLINOIS PROFESSIONAL LAND SURVEYOR, (WE, CLAASSEN, WHITE & ASSOCIATES, P.C. AN ILLINOIS PROFESSIONAL DESIGN FIRM LAND SURVEYING CORPORATION, NUMBER 184-004039,) HAVE SURVEYED THE PLAT OF HIGHWAYS SHOWN HEREON IN SECTION 16, TOWNSHIP 35 NORTH, RANGE 10 EAST OF THE THIRD PRINCIPAL MERIDIAN, WILL COUNTY, THAT THE SURVEY IS TRUE AND COMPLETE AS SHOWN TO THE BEST OF MY KNOWLEDGE AND BELIEF, THAT THE PLAT CORRECTLY REPRESENTS SAID SURVEY, THAT ALL MONUMENTS FOUND AND ESTABLISHED ARE OF PERMANENT QUALITY AND OCCUPY THE POSITIONS SHOWN THEREON AND THAT THE MONUMENTS ARE SUFFICIENT TO ENABLE THE SURVEY TO BE RETRACED, MADE FOR THE DEPARTMENT OF TRANSPORTATION, STATE OF ILLINOIS.

DATED AT _____, ILLINOIS THIS ___ DAY OF _____ 2024 A.D.

ILLINOIS PROFESSIONAL LAND SURVEYOR NO. 035-002962
LICENSE EXPIRATION DATE: NOVEMBER 30, 2026

THIS PROFESSIONAL SERVICE CONFORMS TO THE CURRENT ILLINOIS MINIMUM STANDARDS FOR A BOUNDARY SURVEY.

STATE OF ILLINOIS — DAVID A. CLAASSEN — JOLIET, IL — NO. 2962 — PROFESSIONAL LAND SURVEYOR

CWA SURVEY

CLAASSEN, WHITE & ASSOCIATES, P.C.
LAND SURVEYORS
121 AIRPORT DRIVE, UNIT 1, JOLIET, ILLINOIS 60431
(815) 744-3720 claassenwhite@cwasurvey.com
CWA Job #7577

PROJECT COORDINATES
ILLINOIS STATE PLANE, EAST ZONE, NAD83 (2011)

COORDINATE TABLE ~ I-80

PT.NO.	STATION	OFFSET	NORTHING	EASTING
3053	57+73.33	81.00' LT.	1,764,853.0995	1,051,693.4972
2620	57+99.27	301.36' LT.	1,765,063.7136	1,051,763.3103
3005	58+05.02	0.00' RT.	1,764,767.3779	1,051,708.2118
834	58+37.00	343.32' LT.	1,765,098.0426	1,051,805.3888
2623	58+44.98	311.12' LT.	1,765,065.0630	1,051,806.2895
2621	58+67.27	11.60' LT.	1,764,766.8315	1,051,771.4184
561	59+09.55	20.48' LT.	1,764,768.1698	1,051,814.3979
2681	60+11.72	374.23' LT.	1,765,102.9460	1,051,963.4753
2694	60+17.54	343.16' LT.	1,765,071.4575	1,051,964.3332
3052	61+79.80	120.06' LT.	1,764,833.1135	1,052,089.1716
2695	61+93.66	365.23' LT.	1,765,076.3609	1,052,122.4176
562	62+26.73	68.37' LT.	1,764,778.0133	1,052,130.5261
2696	62+67.88	371.88' LT.	1,765,078.4070	1,052,188.3863
563	62+90.75	114.30' LT.	1,764,820.0527	1,052,195.4079
3051	64+64.20	294.74' LT.	1,764,996.4822	1,052,362.0336
3006	70+35.01	0.00' RT.	1,764,754.2662	1,052,930.5747

PROPOSED CENTERLINE INTERSTATE 80 CURVE PR-I80-NORTH-3

PARCEL NUMBER	TOTAL HOLDINGS ACRES	PART TAKEN ACRES	AREA IN EXISTING R.O.W. ACRES	REMAINDER AREA ACRES	EASEMENT AREA ACRES	EASEMENT AREA SQUARE FEET	PARCEL INDEX NUMBER
1P10144	0.240	0.240	0.000	0.000			30-07-16-424-008
1P10145	0.240	0.240	0.000	0.000			30-07-16-424-009
1P10146	0.120	0.120	0.000	0.000			30-07-16-424-010
1P10147	0.120	0.120	0.000	0.000			30-07-16-424-011
1P10148	0.240	0.240	0.000	0.000			30-07-16-424-012

INTERSTATE 80

PARCEL NUMBER	TOTAL HOLDINGS ACRES	PART TAKEN ACRES	AREA IN EXISTING R.O.W. ACRES	REMAINDER AREA ACRES	EASEMENT AREA ACRES	EASEMENT AREA SQUARE FEET	PARCEL INDEX NUMBER
1P10149	0.240	0.240	0.000	0.000			30-07-16-424-013
1P10150	0.151	0.151	0.000	0.000			30-07-16-424-020 30-07-16-424-025
1P10151	0.214	0.214	0.000	0.000			30-07-16-424-026
1P10152	0.240	0.240	0.000	0.000			30-07-16-424-022
1P10153	0.479	0.479	0.000	0.000			30-07-16-424-023 30-07-16-424-024

REVISION DATE: / / REVISION MADE BY:

IDOT USE ONLY

APPROVED
By William Wright at 2:52 pm, Nov 13, 2024

PLAT OF HIGHWAYS

STATE OF ILLINOIS
DEPARTMENT OF TRANSPORTATION
I–80

LIMITS: RIDGE ROAD TO US 30 COUNTY: WILL
SECTION: JOB NO.: R-91-016-20
STA. 57+99.27 TO STA. 63+00.00
SCALE: 1" = 20' SHEET 415 OF 1230 SHEETS

BUREAU OF LAND ACQUISITION
201 WEST CENTER COURT
SCHAUMBURG, ILLINOIS 60196

PART OF THE SE 1/4 OF SECTION 16, TWP. 35 N., R. 10 E. OF THE 3RD. P.M., IN WILL COUNTY, ILLINOIS.

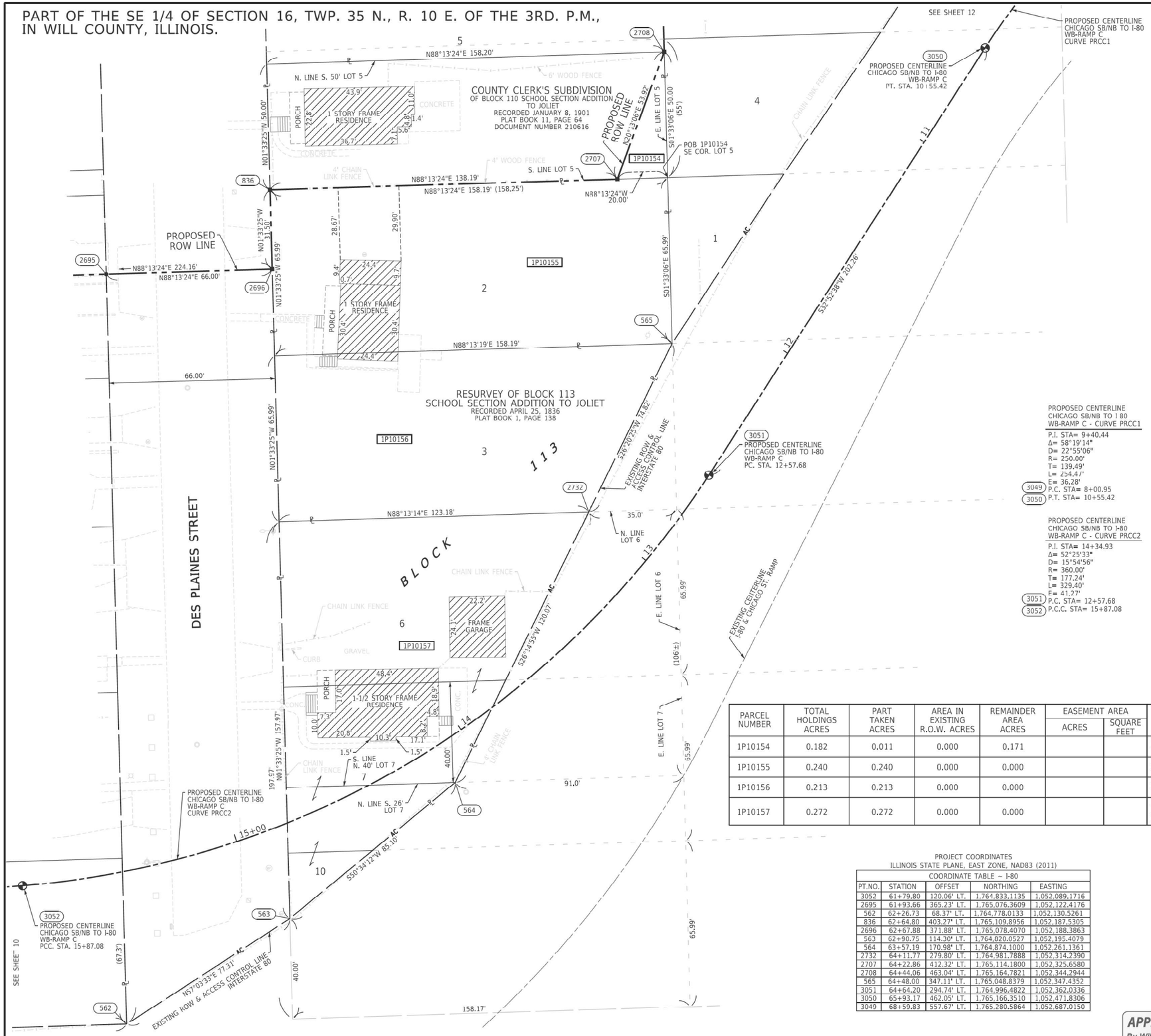

PROPOSED CENTERLINE CHICAGO SB/NB TO I 80 WB-RAMP C - CURVE PRCC1

P.I. STA= 9+40.44
Δ= 58°19'14"
D= 22°55'06"
R= 250.00'
T= 139.49'
L= 254.47'
E= 36.28'
3049 P.C. STA= 8+00.95
3050 P.T. STA= 10+55.42

PROPOSED CENTERLINE CHICAGO SB/NB TO I-80 WB-RAMP C - CURVE PRCC2

P.I. STA= 14+34.93
Δ= 52°25'33"
D= 15°54'56"
R= 360.00'
T= 177.24'
L= 329.40'
E= 41.77'
3051 P.C. STA= 12+57.68
3052 P.C.C. STA= 15+87.08

LEGEND

SECTION CORNER (T N, R E, 9 10 16 15)

QUARTER SECTION CORNER (16 15)

GRAPHIC SCALE FEET (0 20)

SCALE: 1" = 20'

	SECTION / QUARTER SECTION LINE
	PLATTED LOT LINES
℄	PROPERTY (DEED) LINE
APL	APPARENT PROPERTY LINE
	EXISTING CENTERLINE
	PROPOSED CENTERLINE
	EXISTING RIGHT OF WAY LINE
	PROPOSED RIGHT OF WAY LINE
	EXISTING EASEMENT
	PROPOSED EASEMENT
AC	EXISTING ACCESS CONTROL LINE
AC	PROPOSED ACCESS CONTROL LINE
129.32'	MEASURED DIMENSION
129.32' (COMP)	COMPUTED DIMENSION
(129.32')	RECORDED DIMENSION
	EXISTING BUILDING

IRON PIPE OR ROD FOUND — "MAG" NAIL SET

CUT CROSS FOUND OR SET — 5/8" REBAR SET

STAKING OF PROPOSED RIGHT OF WAY. SET DIVISION OF HIGHWAYS SURVEY MARKER TO MONUMENT THE POSITION SHOWN. IDENTIFIED BY INSCRIPTION DATA AND SURVEYORS REGISTRATION NUMBER.

M STAKING OF PROPOSED RIGHT OF WAY IN CULTIVATED AREAS. BURIED 5/8 INCH METAL ROD 20 INCHES BELOW GROUND TO MARK FUTURE SURVEY MARKER POSITION IDENTIFIED BY COLORED PLASTIC CAP BEARING SURVEYORS REGISTRATION NUMBER.

PERMANENT SURVEY MARKER, I.D.O.T. STANDARD 667101.02 (TO BE SET BY OTHERS)

RIGHT OF WAY STAKING PROPOSED TO BE SET

SURVEY NOTES:
1. ALL DIMENSIONS ARE MEASURED UNLESS OTHERWISE SPECIFIED.
2. BEARING, DISTANCES, AND COORDINATES SHOWN HEREON REFERENCE THE ILLINOIS STATE PLANE COORDINATE SYSTEM, EAST ZONE, NORTH AMERICAN DATUM OF 1983 (2011 ADJUSTMENT) "GRID". COORDINATES ARE FIXED HOLDING THE PUBLISHED NAD83(2011) VALUES FOR NGS CONTROL MONUMENTS WILL COUNTY GPS 713 (PID-AE2569), WILL COUNTY GPS 716 (PID-AE2570) AND WILL COUNTY GPS 718 (PID-AE2571).
3. ALL MEASURED AND CALCULATED DISTANCES ARE "GRID" NOT "GROUND". TO OBTAIN GROUND DISTANCES, DIVIDE GRID DISTANCES SHOWN BY THE COMBINATION FACTOR OF 0.99995667.
4. AREAS SHOWN ON THIS PLAT ARE "GROUND".
5. FIELD SURVEY COMPLETED IN DECEMBER 2021.

STATE OF ILLINOIS)
)SS
COUNTY OF WILL)

THIS IS TO CERTIFY THAT I, DAVID A. CLAASSEN, AN ILLINOIS PROFESSIONAL LAND SURVEYOR, (WE, CLAASSEN, WHITE & ASSOCIATES, P.C. AN ILLINOIS PROFESSIONAL DESIGN FIRM LAND SURVEYING CORPORATION, NUMBER 184-004039,) HAVE SURVEYED THE PLAT OF HIGHWAYS SHOWN HEREON IN SECTION 16, TOWNSHIP 35 NORTH, RANGE 10 EAST OF THE THIRD PRINCIPAL MERIDIAN, WILL COUNTY, THAT THE SURVEY IS TRUE AND COMPLETE AS SHOWN TO THE BEST OF MY KNOWLEDGE AND BELIEF, THAT THE PLAT CORRECTLY REPRESENTS SAID SURVEY, THAT ALL MONUMENTS FOUND AND ESTABLISHED ARE OF PERMANENT QUALITY AND OCCUPY THE POSITIONS SHOWN THEREON AND THAT THE MONUMENTS ARE SUFFICIENT TO ENABLE THE SURVEY TO BE RETRACED, MADE FOR THE DEPARTMENT OF TRANSPORTATION, STATE OF ILLINOIS.

DATED AT _____, ILLINOIS THIS ___ DAY OF _____ 2024 A.D.

ILLINOIS PROFESSIONAL LAND SURVEYOR NO. 035-002962
LICENSE EXPIRATION DATE: NOVEMBER 30, 2026

THIS PROFESSIONAL SERVICE CONFORMS TO THE CURRENT ILLINOIS MINIMUM STANDARDS FOR A BOUNDARY SURVEY.

STATE OF ILLINOIS — DAVID A. CLAASSEN — JOLIET, IL — NO. 2962 — PROFESSIONAL LAND SURVEYOR

PARCEL NUMBER	TOTAL HOLDINGS ACRES	PART TAKEN ACRES	AREA IN EXISTING R.O.W. ACRES	REMAINDER AREA ACRES	EASEMENT AREA		PARCEL INDEX NUMBER
					ACRES	SQUARE FEET	
1P10154	0.182	0.011	0.000	0.171			30-07-16-425-007
1P10155	0.240	0.240	0.000	0.000			30-07-16-425-008
1P10156	0.213	0.213	0.000	0.000			30-07-16-425-030
1P10157	0.272	0.272	0.000	0.000			30-07-16-425-012 30-07-16-425-032 30-07-16-425-034

PROJECT COORDINATES
ILLINOIS STATE PLANE, EAST ZONE, NAD83 (2011)

COORDINATE TABLE ~ I-80

PT.NO.	STATION	OFFSET	NORTHING	EASTING
3052	61+79.80	120.06' LT.	1,764,833.1135	1,052,089.1716
2695	61+93.66	365.23' LT.	1,765,076.3609	1,052,122.4176
562	62+26.73	68.37' LT.	1,764,778.0133	1,052,130.5261
836	62+64.80	403.27' LT.	1,765,109.8956	1,052,187.5305
2696	62+67.88	371.88' LT.	1,765,078.4070	1,052,188.3863
563	62+90.75	114.30' LT.	1,764,020.0527	1,052,195.4079
564	63+57.19	170.98' LT.	1,764,874.1000	1,052,261.1361
2732	64+11.77	279.80' LT.	1,764,981.7888	1,052,314.2390
2707	64+22.86	412.32' LT.	1,765,114.1800	1,052,325.6580
2708	64+44.06	463.04' LT.	1,765,164.7821	1,052,344.2944
565	64+48.00	347.11' LT.	1,765,048.8379	1,052,347.4352
3051	64+64.20	294.74' LT.	1,764,996.4822	1,052,362.0336
3050	65+93.17	462.05' LT.	1,765,166.3510	1,052,471.8306
3049	68+59.83	557.67' LT.	1,765,280.5864	1,052,687.0150

CWA SURVEY
CLAASSEN, WHITE & ASSOCIATES, P.C.
LAND SURVEYORS
121 AIRPORT DRIVE, UNIT 1, JOLIET, ILLINOIS 60431
(815) 744-3720 claassenwhite@cwasurvey.com
CWA Job #7577

PLAT OF HIGHWAYS

STATE OF ILLINOIS
DEPARTMENT OF TRANSPORTATION
I-80

LIMITS: RIDGE ROAD TO US 30 — COUNTY: WILL
SECTION: — JOB NO.: R-91-016-20
STA. 61+79.80 TO STA. 65+93.17
SCALE: 1" = 20' — SHEET 416 OF 1230 SHEETS

BUREAU OF LAND ACQUISITION
201 WEST CENTER COURT
SCHAUMBURG, ILLINOIS 60196

IDOT USE ONLY

APPROVED
By William Wright at 2:53 pm, Nov 13, 2024

REVISION DATE: / / REVISION MADE BY:

PART OF THE SE 1/4 OF SECTION 16, TWP. 35 N., R. 10 E. OF THE 3RD. P.M., IN WILL COUNTY, ILLINOIS.

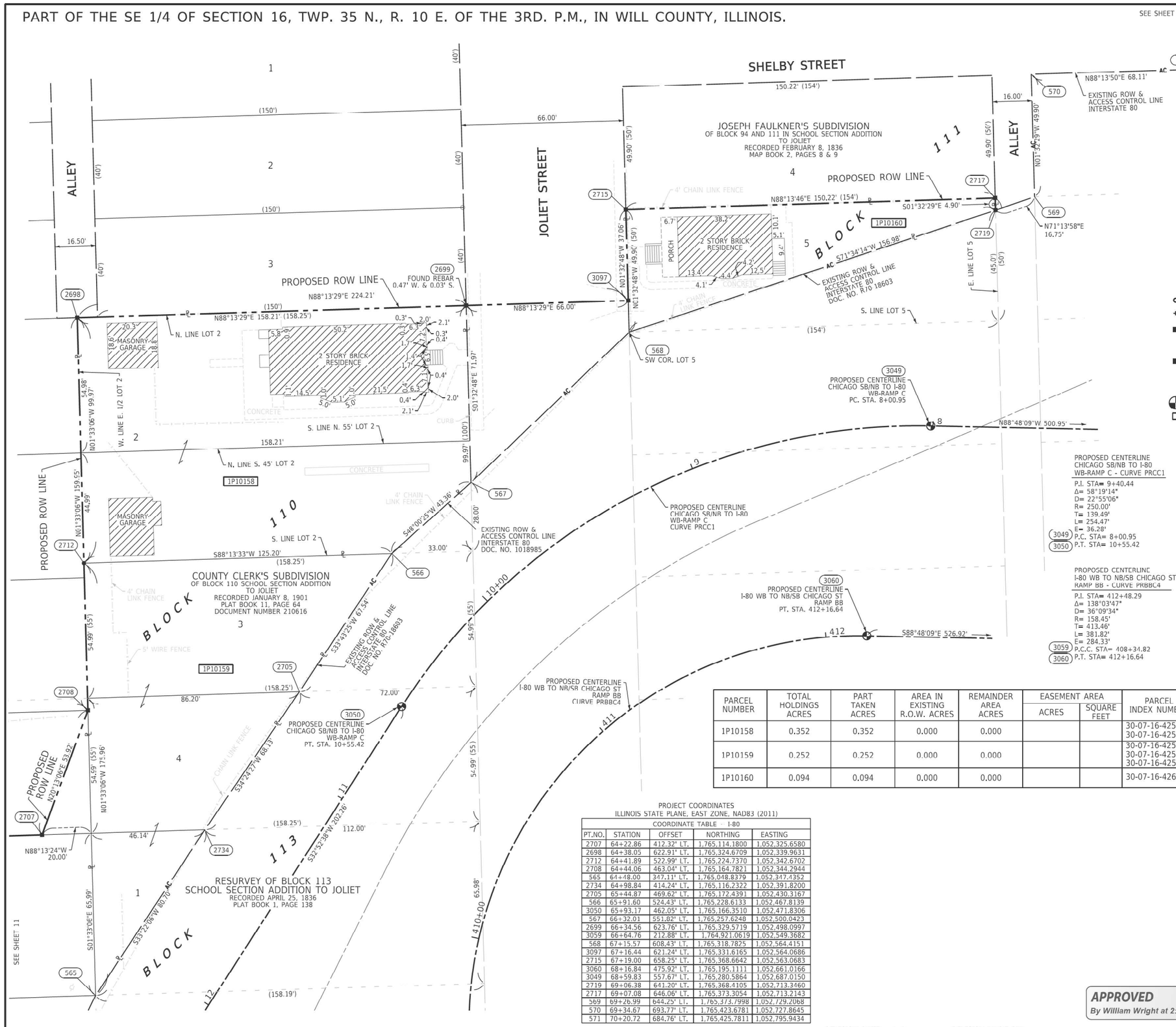

LEGEND

SECTION CORNER

QUARTER SECTION CORNER

GRAPHIC SCALE FEET

SCALE: 1" = 20'

SECTION / QUARTER SECTION LINE
PLATTED LOT LINES
PROPERTY (DEED) LINE
APPARENT PROPERTY LINE
EXISTING CENTERLINE
PROPOSED CENTERLINE
EXISTING RIGHT OF WAY LINE
PROPOSED RIGHT OF WAY LINE
EXISTING EASEMENT
PROPOSED EASEMENT
EXISTING ACCESS CONTROL LINE
PROPOSED ACCESS CONTROL LINE
129.32' MEASURED DIMENSION
129.32' (COMP) COMPUTED DIMENSION
(129.32') RECORDED DIMENSION
EXISTING BUILDING

IRON PIPE OR ROD FOUND
"MAG" NAIL SET
CUT CROSS FOUND OR SET
5/8" REBAR SET

STAKING OF PROPOSED RIGHT OF WAY. SET DIVISION OF HIGHWAYS SURVEY MARKER TO MONUMENT THE POSITION SHOWN. IDENTIFIED BY INSCRIPTION DATA AND SURVEYORS REGISTRATION NUMBER.

STAKING OF PROPOSED RIGHT OF WAY IN CULTIVATED AREAS. BURIED 5/8 INCH METAL ROD 20 INCHES BELOW GROUND TO MARK FUTURE SURVEY MARKER POSITION IDENTIFIED BY COLORED PLASTIC CAP BEARING SURVEYORS REGISTRATION NUMBER.

PERMANENT SURVEY MARKER, I.D.O.T. STANDARD 667101.02 (TO BE SET BY OTHERS)

RIGHT OF WAY STAKING PROPOSED TO BE SET

SURVEY NOTES:
1. ALL DIMENSIONS ARE MEASURED UNLESS OTHERWISE SPECIFIED.
2. BEARING, DISTANCES, AND COORDINATES SHOWN HEREON REFERENCE THE ILLINOIS STATE PLANE COORDINATE SYSTEM, EAST ZONE, NORTH AMERICAN DATUM OF 1983 (2011 ADJUSTMENT) "GRID". COORDINATES ARE FIXED HOLDING THE PUBLISHED NAD83(2011) VALUES FOR NGS CONTROL MONUMENTS WILL COUNTY GPS 713 (PID-AE2569), WILL COUNTY GPS 716 (PID-AE2570) AND WILL COUNTY GPS 718 (PID-AE2571).
3. ALL MEASURED AND CALCULATED DISTANCES ARE "GRID" NOT "GROUND". TO OBTAIN GROUND DISTANCES, DIVIDE GRID DISTANCES SHOWN BY THE COMBINATION FACTOR OF 0.99995667.
4. AREAS SHOWN ON THIS PLAT ARE "GROUND".
5. FIELD SURVEY COMPLETED IN DECEMBER 2021.

STATE OF ILLINOIS)
)SS
COUNTY OF WILL)

THIS IS TO CERTIFY THAT I, DAVID A. CLAASSEN, AN ILLINOIS PROFESSIONAL LAND SURVEYOR, (WE, CLAASSEN, WHITE & ASSOCIATES, P.C. AN ILLINOIS PROFESSIONAL DESIGN FIRM LAND SURVEYING CORPORATION, NUMBER 184-004039,) HAVE SURVEYED THE PLAT OF HIGHWAYS SHOWN HEREON IN SECTION 16, TOWNSHIP 35 NORTH, RANGE 10 EAST OF THE THIRD PRINCIPAL MERIDIAN, WILL COUNTY, THAT THE SURVEY IS TRUE AND COMPLETE AS SHOWN TO THE BEST OF MY KNOWLEDGE AND BELIEF, THAT THE PLAT CORRECTLY REPRESENTS SAID SURVEY, THAT ALL MONUMENTS FOUND AND ESTABLISHED ARE OF PERMANENT QUALITY AND OCCUPY THE POSITIONS SHOWN THEREON AND THAT THE MONUMENTS ARE SUFFICIENT TO ENABLE THE SURVEY TO BE RETRACED, MADE FOR THE DEPARTMENT OF TRANSPORTATION, STATE OF ILLINOIS.

DATED AT _____, ILLINOIS THIS __ DAY OF _____ 2024 A.D.

ILLINOIS PROFESSIONAL LAND SURVEYOR NO. 035-002962
LICENSE EXPIRATION DATE: NOVEMBER 30, 2026

THIS PROFESSIONAL SERVICE CONFORMS TO THE CURRENT ILLINOIS MINIMUM STANDARDS FOR A BOUNDARY SURVEY.

STATE OF ILLINOIS · DAVID A. CLAASSEN · JOLIET, IL · NO. 2962 · PROFESSIONAL LAND SURVEYOR

PARCEL NUMBER	TOTAL HOLDINGS ACRES	PART TAKEN ACRES	AREA IN EXISTING R.O.W. ACRES	REMAINDER AREA ACRES	EASEMENT AREA		PARCEL INDEX NUMBER
					ACRES	SQUARE FEET	
1P10158	0.352	0.352	0.000	0.000			30-07-16-425-018 30-07-16-425-038
1P10159	0.252	0.252	0.000	0.000			30-07-16-425-020 30-07-16-425-036 30-07-16-425-041
1P10160	0.094	0.094	0.000	0.000			30-07-16-426-002

PROJECT COORDINATES
ILLINOIS STATE PLANE, EAST ZONE, NAD83 (2011)

COORDINATE TABLE - I-80

PT.NO.	STATION	OFFSET	NORTHING	EASTING
2707	64+22.86	412.32' LT.	1,765,114.1800	1,052,325.6580
2698	64+38.05	622.91' LT.	1,765,324.6709	1,052,339.9631
2712	64+41.89	522.99' LT.	1,765,224.7370	1,052,342.6702
2708	64+44.06	463.04' LT.	1,765,164.7821	1,052,344.2944
565	64+48.00	347.11' LT.	1,765,048.8379	1,052,347.1352
2734	64+98.84	414.24' LT.	1,765,116.2322	1,052,391.8200
2705	65+44.87	469.62' LT.	1,765,172.4391	1,052,430.3167
566	65+91.60	524.43' LT.	1,765,228.6133	1,052,467.8139
3050	65+93.17	462.05' LT.	1,765,166.3510	1,052,471.8306
567	66+32.01	551.82' LT.	1,765,257.6248	1,052,500.0423
2699	66+34.56	623.76' LT.	1,765,329.5719	1,052,498.0997
3059	66+64.76	212.88' LT.	1,764,921.0619	1,052,549.3682
568	67+15.57	608.43' LT.	1,765,318.7825	1,052,564.4151
3097	67+16.44	621.24' LT.	1,765,331.6165	1,052,564.0686
2715	67+19.00	658.25' LT.	1,765,368.6642	1,052,563.0683
3060	68+16.84	475.92' LT.	1,765,195.1111	1,052,661.0166
3049	68+59.83	557.67' LT.	1,765,280.5864	1,052,687.0150
2719	69+06.38	641.20' LT.	1,765,368.4105	1,052,713.3460
2717	69+07.08	646.06' LT.	1,765,373.3054	1,052,713.2143
569	69+26.99	644.25' LT.	1,765,373.7998	1,052,729.2068
570	69+34.67	693.77' LT.	1,765,423.6781	1,052,727.8645
571	70+20.72	684.76' LT.	1,765,425.7811	1,052,795.9434

CWA SURVEY
CLAASSEN, WHITE & ASSOCIATES, P.C.
LAND SURVEYORS
121 AIRPORT DRIVE, UNIT I, JOLIET, ILLINOIS 60431
(815) 744-3720 claassenwhite@cwasurvey.com
CWA Job #7577

PLAT OF HIGHWAYS

STATE OF ILLINOIS
DEPARTMENT OF TRANSPORTATION
I-80

LIMITS: RIDGE ROAD TO US 30 COUNTY: WILL
SECTION: JOB NO.: R-91-016-20
STA. 64+22.86 TO STA. 70+20.72
SCALE: 1" = 20' SHEET 417 OF 1230 SHEETS

IDOT USE ONLY

APPROVED
By William Wright at 2:53 pm, Nov 13, 2024

REVISION DATE: / / REVISION MADE BY:

BUREAU OF LAND ACQUISITION
201 WEST CENTER COURT
SCHAUMBURG, ILLINOIS 60196

PART OF THE SE 1/4 OF SECTION 16, TWP. 35 N., R. 10 E. OF THE 3RD. P.M., IN WILL COUNTY, ILLINOIS.

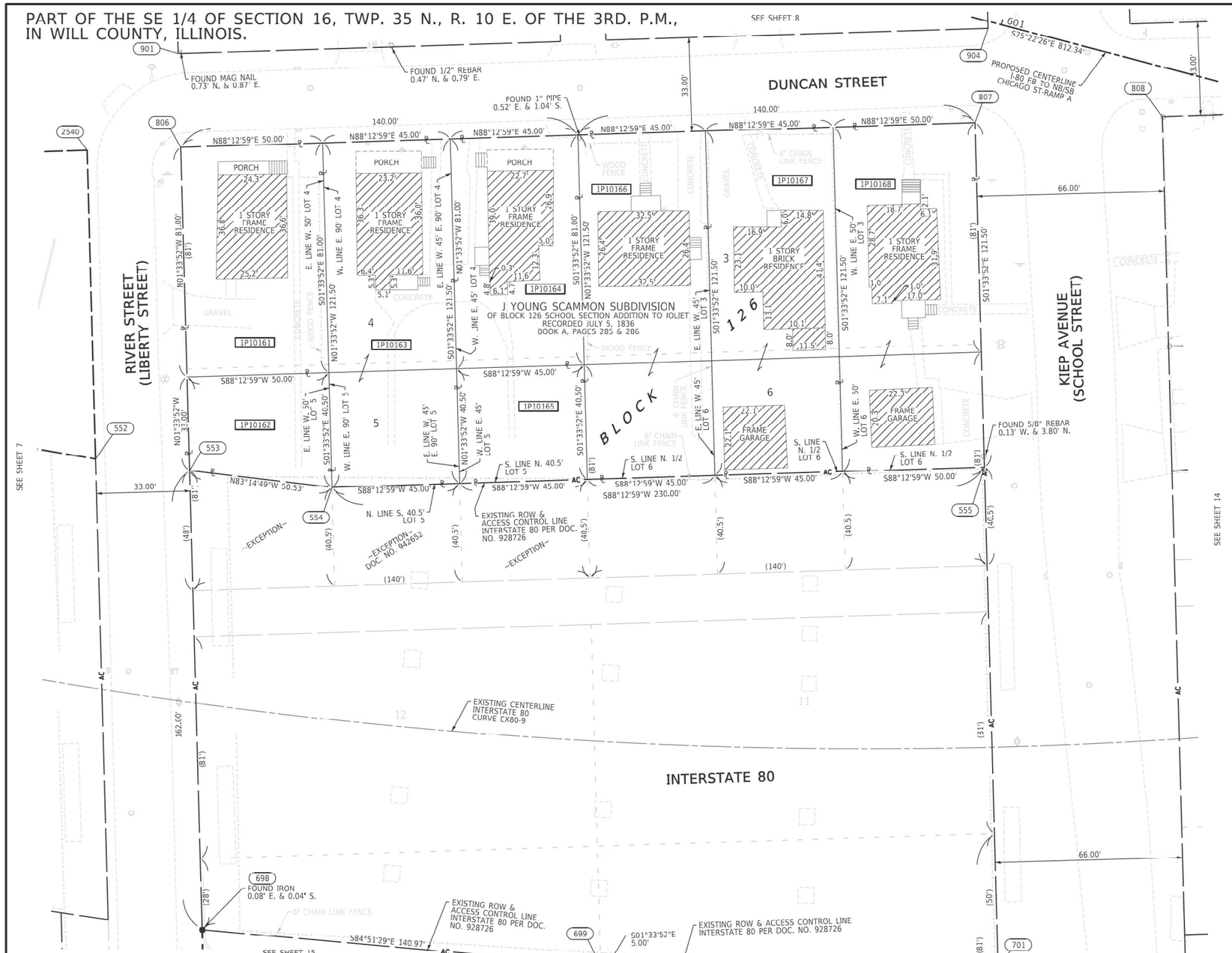

PARCEL NUMBER	TOTAL HOLDINGS ACRES	PART TAKEN ACRES	AREA IN EXISTING R.O.W. ACRES	REMAINDER AREA ACRES	EASEMENT AREA		PARCEL INDEX NUMBER
					ACRES	SQUARE FEET	
1P10161	0.093	0.093	0.000	0.000			30-07-16-431-001
1P10162	0.042	0.042	0.000	0.000			30-07-16-431-002
1P10163	0.126	0.126	0.000	0.000			30-07-16-431-004
1P10164	0.084	0.084	0.000	0.000			30-07-16-431-006
1P10165	0.042	0.042	0.000	0.000			30-07-16-431-007
1P10166	0.126	0.126	0.000	0.000			30-07-16-431-014
1P10167	0.126	0.126	0.000	0.000			30-07-16-431-015
1P10168	0.139	0.139	0.000	0.000			30-07-16-431-016

PROJECT COORDINATES
ILLINOIS STATE PLANE, EAST ZONE, NAD83 (2011)

COORDINATE TABLE ~ I-80

FT.NO.	STATION	OFFSET	NORTHING	EASTING
2540	52+43.26	170.44' RT.	1,764,713.6447	1,051,123.6258
901	52+67.83	130.66' RT.	1,764,747.6597	1,051,155.7091
552	52+68.09	276.39' RT.	1,764,604.8574	1,051,126.5969
806	52+75.36	162.79' RT.	1,764,714.6718	1,051,156.6100
553	53+01.37	273.78' RT.	1,764,600.7143	1,051,159.7223
698	53+38.34	431.51' RT.	1,764,438.7723	1,051,164.1451
554	53+51.72	269.48' RT.	1,764,594.7723	1,051,209.9029
699	54+78.40	415.59' RT.	1,764,426.1384	1,051,304.5431
700	54+79.54	420.46' RT.	1,764,421.1403	1,051,304.6796
904	55+45.55	64.44' RT.	1,764,756.5454	1,051,441.0745
807	55+47.73	97.85' RT.	1,764,723.3862	1,051,436.4780
555	55+75.45	216.14' RT.	1,764,601.9306	1,051,439.7951
808	56+11.93	82.54' RT.	1,764,725.4404	1,051,502.4465
701	56+15.73	387.99' RT.	1,764,425.4975	1,051,444.6136
2629	56+22.80	418.17' RT.	1,764,394.5091	1,051,445.4599
2653	56+54.90	410.52' RT.	1,764,395.5361	1,051,478.4442

EXISTING CENTERLINE INTERSTATE 80 CURVE EX80-9

Δ = 29°40'17"
D = 03°15'10"
R = 1760.16'
T = 466.23'
L = 911.53'
E = 60.70'

LEGEND

SECTION CORNER (9 10 16 15)

QUARTER SECTION CORNER (16 15)

GRAPHIC SCALE FEET (0 20)
SCALE: 1" = 20'

- SECTION / QUARTER SECTION LINE
- PLATTED LOT LINES
- PROPERTY (DEED) LINE
- APL — APPARENT PROPERTY LINE
- EXISTING CENTERLINE
- PROPOSED CENTERLINE
- EXISTING RIGHT OF WAY LINE
- PROPOSED RIGHT OF WAY LINE
- EXISTING EASEMENT
- PROPOSED EASEMENT
- AC — EXISTING ACCESS CONTROL LINE
- AC — PROPOSED ACCESS CONTROL LINE
- 129.32' — MEASURED DIMENSION
- 129.32' (COMP) — COMPUTED DIMENSION
- (129.32') — RECORDED DIMENSION
- EXISTING BUILDING

- IRON PIPE OR ROD FOUND
- "MAG" NAIL SET
- CUT CROSS FOUND OR SET
- 5/8" REBAR SET
- STAKING OF PROPOSED RIGHT OF WAY. SET DIVISION OF HIGHWAYS SURVEY MARKER TO MONUMENT THE POSITION SHOWN. IDENTIFIED BY INSCRIPTION DATA AND SURVEYORS REGISTRATION NUMBER.
- M — STAKING OF PROPOSED RIGHT OF WAY IN CULTIVATED AREAS. BURIED 5/8 INCH METAL ROD 20 INCHES BELOW GROUND TO MARK FUTURE SURVEY MARKER POSITION IDENTIFIED BY COLORED PLASTIC CAP BEARING SURVEYORS REGISTRATION NUMBER.
- PERMANENT SURVEY MARKER, I.D.O.T. STANDARD 667101.02 (TO BE SET BY OTHERS)
- RIGHT OF WAY STAKING PROPOSED TO BE SET

SURVEY NOTES:
1. ALL DIMENSIONS ARE MEASURED UNLESS OTHERWISE SPECIFIED.
2. BEARING, DISTANCES, AND COORDINATES SHOWN HEREON REFERENCE THE ILLINOIS STATE PLANE COORDINATE SYSTEM, EAST ZONE, NORTH AMERICAN DATUM OF 1983 (2011 ADJUSTMENT) "GRID". COORDINATES ARE FIXED HOLDING THE PUBLISHED NAD83(2011) VALUES FOR NGS CONTROL MONUMENTS WILL COUNTY GPS 713 (PID-AE2569), WILL COUNTY GPS 716 (PID-AE2570) AND WILL COUNTY GPS 718 (PID-AE2571).
3. ALL MEASURED AND CALCULATED DISTANCES ARE "GRID" NOT "GROUND". TO OBTAIN GROUND DISTANCES, DIVIDE GRID DISTANCES SHOWN BY THE COMBINATION FACTOR OF 0.99995667.
4. AREAS SHOWN ON THIS PLAT ARE "GROUND".
5. FIELD SURVEY COMPLETED IN DECEMBER 2021.

STATE OF ILLINOIS)
)SS
COUNTY OF WILL)

THIS IS TO CERTIFY THAT I, DAVID A. CLAASSEN, AN ILLINOIS PROFESSIONAL LAND SURVEYOR, (WE, CLAASSEN, WHITE & ASSOCIATES, P.C. AN ILLINOIS PROFESSIONAL DESIGN FIRM LAND SURVEYING CORPORATION, NUMBER 184-004039,) HAVE SURVEYED THE PLAT OF HIGHWAYS SHOWN HEREON IN SECTION 16, TOWNSHIP 35 NORTH, RANGE 10 EAST OF THE THIRD PRINCIPAL MERIDIAN, WILL COUNTY, THAT THE SURVEY IS TRUE AND COMPLETE AS SHOWN TO THE BEST OF MY KNOWLEDGE AND BELIEF, THAT THE PLAT CORRECTLY REPRESENTS SAID SURVEY, THAT ALL MONUMENTS FOUND AND ESTABLISHED ARE OF PERMANENT QUALITY AND OCCUPY THE POSITIONS SHOWN THEREON AND THAT THE MONUMENTS ARE SUFFICIENT TO ENABLE THE SURVEY TO BE RETRACED, MADE FOR THE DEPARTMENT OF TRANSPORTATION, STATE OF ILLINOIS.

DATED AT _____, ILLINOIS THIS __ DAY OF _____ 2024 A.D.

ILLINOIS PROFESSIONAL LAND SURVEYOR NO. 035-002962
LICENSE EXPIRATION DATE: NOVEMBER 30, 2026

THIS PROFESSIONAL SERVICE CONFORMS TO THE CURRENT ILLINOIS MINIMUM STANDARDS FOR A BOUNDARY SURVEY.

STATE OF ILLINOIS — DAVID A. CLAASSEN — JOLIET, IL — NO. 2962 — PROFESSIONAL LAND SURVEYOR

CWA SURVEY
CLAASSEN, WHITE & ASSOCIATES, P.C.
LAND SURVEYORS
121 AIRPORT DRIVE, UNIT 1, JOLIET, ILLINOIS 60431
(815) 744-3720 claassenwhite@cwasurvey.com
CWA Job #7577

PLAT OF HIGHWAYS

STATE OF ILLINOIS
DEPARTMENT OF TRANSPORTATION
I-80

LIMITS: RIDGE ROAD TO US 30 — COUNTY: WILL
SECTION: — JOB NO.: R-91-016-20
STA. 52+43.26 TO STA. 56+54.90
SCALE: 1" = 20' — SHEET 418 OF 1230 SHEETS

BUREAU OF LAND ACQUISITION
201 WEST CENTER COURT
SCHAUMBURG, ILLINOIS 60196

IDOT USE ONLY

APPROVED
By William Wright at 2:54 pm, Nov 13, 2024

REVISION DATE: / / REVISION MADE BY:

PART OF THE SE 1/4 OF SECTION 16, TWP. 35 N., R. 10 E. OF THE 3RD. P.M., IN WILL COUNTY, ILLINOIS.

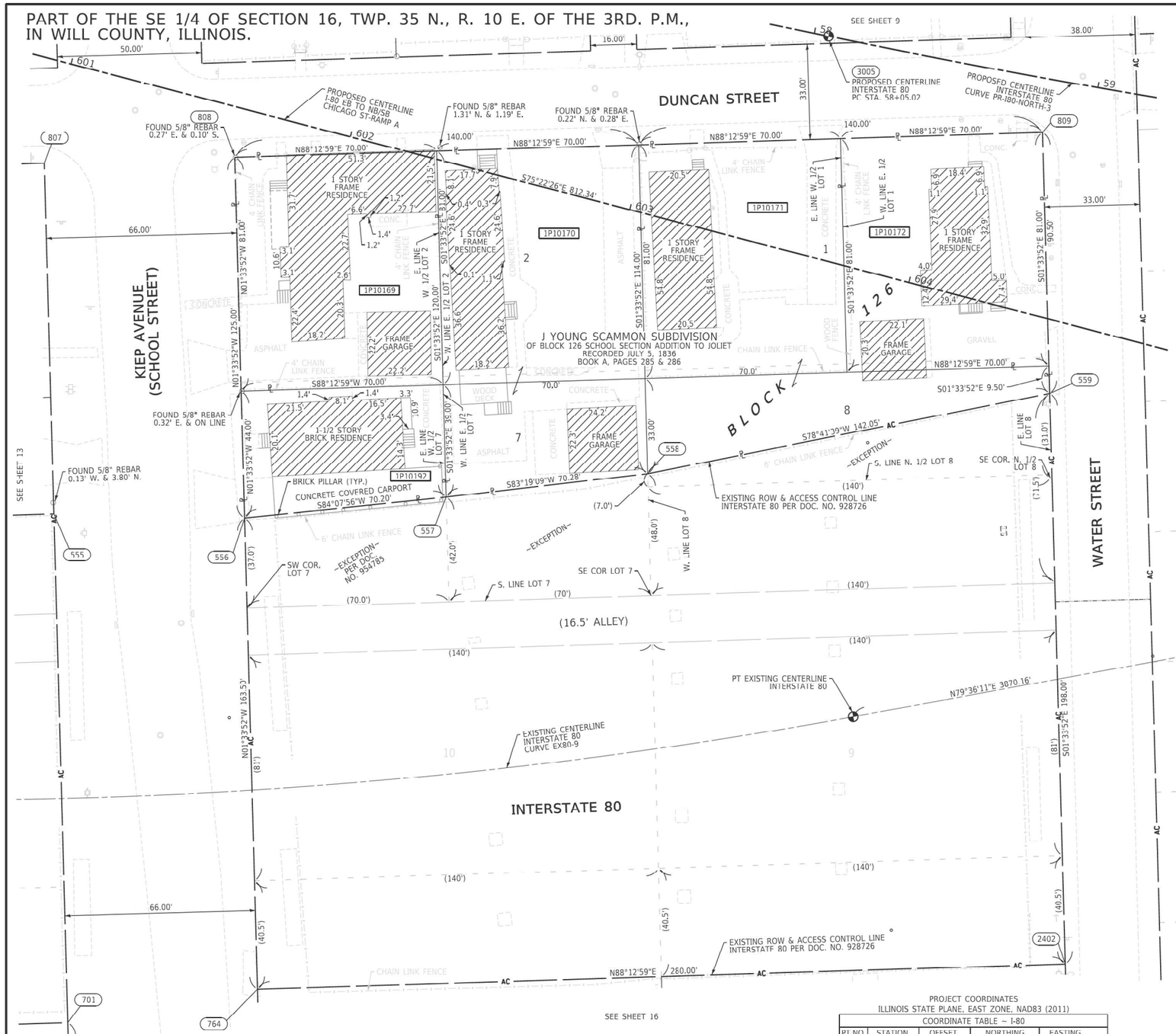

LEGEND

SECTION CORNER (9 10 16 15)

QUARTER SECTION CORNER (16 15)

GRAPHIC SCALE FEET (0 20)
SCALE: 1" = 20'

	SECTION / QUARTER SECTION LINE
	PLATTED LOT LINES
℄	PROPERTY (DEED) LINE
APL	APPARENT PROPERTY LINE
	EXISTING CENTERLINE
	PROPOSED CENTERLINE
	EXISTING RIGHT OF WAY LINE
	PROPOSED RIGHT OF WAY LINE
	EXISTING EASEMENT
	PROPOSED EASEMENT
AC	EXISTING ACCESS CONTROL LINE
AC	PROPOSED ACCESS CONTROL LINE
129.32'	MEASURED DIMENSION
129.32' (COMP)	COMPUTED DIMENSION
(129.32')	RECORDED DIMENSION
	EXISTING BUILDING
○	IRON PIPE OR ROD FOUND
⊕	"MAG" NAIL SET
+	CUT CROSS FOUND OR SET
●	5/8" REBAR SET
■	STAKING OF PROPOSED RIGHT OF WAY. SET DIVISION OF HIGHWAYS SURVEY MARKER TO MONUMENT THE POSITION SHOWN. IDENTIFIED BY INSCRIPTION DATA AND SURVEYORS REGISTRATION NUMBER.
■ M	STAKING OF PROPOSED RIGHT OF WAY IN CULTIVATED AREAS. BURIED 5/8 INCH METAL ROD 20 INCHES BELOW GROUND TO MARK FUTURE SURVEY MARKER POSITION IDENTIFIED BY COLORED PLASTIC CAP BEARING SURVEYORS REGISTRATION NUMBER.
⊕	PERMANENT SURVEY MARKER, I.D.O.T. STANDARD 667101.02 (TO BE SET BY OTHERS)
□	RIGHT OF WAY STAKING PROPOSED TO BE SET

SURVEY NOTES:
1. ALL DIMENSIONS ARE MEASURED UNLESS OTHERWISE SPECIFIED.
2. BEARING, DISTANCES, AND COORDINATES SHOWN HEREON REFERENCE THE ILLINOIS STATE PLANE COORDINATE SYSTEM, EAST ZONE, NORTH AMERICAN DATUM OF 1983 (2011 ADJUSTMENT) "GRID". COORDINATES ARE FIXED HOLDING THE PUBLISHED NAD83(2011) VALUES FOR NGS CONTROL MONUMENTS WILL COUNTY GPS 713 (PID-AE2569), WILL COUNTY GPS 716 (PID-AE2570) AND WILL COUNTY GPS 718 (PID-AE2571).
3. ALL MEASURED AND CALCULATED DISTANCES ARE "GRID" NOT "GROUND". TO OBTAIN GROUND DISTANCES, DIVIDE GRID DISTANCES SHOWN BY THE COMBINATION FACTOR OF 0.99995667.
4. AREAS SHOWN ON THIS PLAT ARE "GROUND".
5. FIELD SURVEY COMPLETED IN DECEMBER 2021.

STATE OF ILLINOIS)
)SS
COUNTY OF WILL)

THIS IS TO CERTIFY THAT I, DAVID A. CLAASSEN, AN ILLINOIS PROFESSIONAL LAND SURVEYOR, (WE, CLAASSEN, WHITE & ASSOCIATES, P.C. AN ILLINOIS PROFESSIONAL DESIGN FIRM LAND SURVEYING CORPORATION, NUMBER 184-004039,) HAVE SURVEYED THE PLAT OF HIGHWAYS SHOWN HEREON IN SECTION 16, TOWNSHIP 35 NORTH, RANGE 10 EAST OF THE THIRD PRINCIPAL MERIDIAN, WILL COUNTY, THAT THE SURVEY IS TRUE AND COMPLETE AS SHOWN TO THE BEST OF MY KNOWLEDGE AND BELIEF, THAT THE PLAT CORRECTLY REPRESENTS SAID SURVEY, THAT ALL MONUMENTS FOUND AND ESTABLISHED ARE OF PERMANENT QUALITY AND OCCUPY THE POSITIONS SHOWN THEREON AND THAT THE MONUMENTS ARE SUFFICIENT TO ENABLE THE SURVEY TO BE RETRACED, MADE FOR THE DEPARTMENT OF TRANSPORTATION, STATE OF ILLINOIS.

DATED AT _____, ILLINOIS THIS ___ DAY OF _____ 2024 A.D.

ILLINOIS PROFESSIONAL LAND SURVEYOR NO. 035-002962
LICENSE EXPIRATION DATE: NOVEMBER 30, 2026

THIS PROFESSIONAL SERVICE CONFORMS TO THE CURRENT ILLINOIS MINIMUM STANDARDS FOR A BOUNDARY SURVEY.

STATE OF ILLINOIS · DAVID A. CLAASSEN · JOLIET, IL · NO. 2962 · PROFESSIONAL LAND SURVEYOR

CWA SURVEY
CLAASSEN, WHITE & ASSOCIATES, P.C.
LAND SURVEYORS
121 AIRPORT DRIVE, UNIT I, JOLIET, ILLINOIS 60431
(815) 744-3720 claassenwhite@cwasurvey.com
CWA Job #7577

PROPOSED CENTERLINE
INTERSTATE 80
CURVE PR-180-NORTH-3

P.I. STA= 64+27.70
Δ= 22°01'22"
D= 01°47'26"
R= 3200.00'
T= 622.68'
L= 1229.99'
E= 60.02'
3005 P.C. STA= 58+05.02
3006 P.T. STA= 70+35.01

EXISTING CENTERLINE
INTERSTATE 80
CURVE EX80-9

Δ = 29°40'17"
D = 03°15'19"
R = 1760.16'
T = 466.23'
L = 911.53'
E = 60.70'

PARCEL NUMBER	TOTAL HOLDINGS ACRES	PART TAKEN ACRES	AREA IN EXISTING R.O.W. ACRES	REMAINDER AREA ACRES	EASEMENT AREA		PARCEL INDEX NUMBER
					ACRES	SQUARE FEET	
1P10169	0.130	0.130	0.000	0.000			30 07 16 431 024
1P10170	0.188	0.188	0.000	0.000			30-07-16-431-027 30-07-16-431-028
1P10171	0.198	0.198	0.000	0.000			30-07-16-431-037 30-07-16-431-039
1P10172	0.130	0.130	0.000	0.000			30-07-16-431-038
1P10192	0.067	0.067	0.000	0.000			30-07-16-431-025

PROJECT COORDINATES
ILLINOIS STATE PLANE, EAST ZONE, NAD83 (2011)

COORDINATE TABLE ~ I-80

PT.NO.	STATION	OFFSET	NORTHING	EASTING
807	55+47.73	97.85' RT.	1,764,723.3862	1,051,436.4780
555	55+75.45	216.14' RT.	1,764,601.9306	1,051,439.7951
808	56+11.93	82.54' RT.	1,764,725.4404	1,051,502.4465
701	56+15.73	387.99' RT.	1,764,425.4975	1,051,444.6136
2629	56+22.80	418.17' RT.	1,764,394.5091	1,051,445.4599
556	56+40.45	204.25' RT.	1,764,600.4869	1,051,505.8591
2653	56+54.90	410.52' RT.	1,764,395.5361	1,051,478.4442
764	56+77.76	363.43' RT.	1,764,437.0484	1,051,510.3228
557	57+07.40	183.14' RT.	1,764,607.6637	1,051,575.6905
558	57+74.13	161.07' RT.	1,764,615.8401	1,051,645.4928
3005	58+05.02	0.00' RT.	1,764,767.3779	1,051,708.2118
809	58+83.85	18.58' RT.	1,764,734.1548	1,051,782.3145
559	59+01.72	107.23' RT.	1,764,643.6885	1,051,784.7852
2402	59+37.67	301.50' RT.	1,764,445.7628	1,051,790.1907
3006	70+35.01	0.00' RT.	1,764,754.2662	1,052,930.5747

REVISION DATE: / / REVISION MADE BY:

IDOT USE ONLY

APPROVED
By William Wright at 2:54 pm, Nov 13, 2024

PLAT OF HIGHWAYS
STATE OF ILLINOIS
DEPARTMENT OF TRANSPORTATION
I-80

LIMITS: RIDGE ROAD TO US 30 COUNTY: WILL
SECTION: JOB NO.: R-91-016-20
STA. 55+47.73 TO STA. 59+37.67
SCALE: 1" = 20' SHEET 419 OF 1230 SHEETS

BUREAU OF LAND ACQUISITION
201 WEST CENTER COURT
SCHAUMBURG, ILLINOIS 60196

PART OF THE SE 1/4 OF SECTION 16, TWP. 35 N., R. 10 E. OF THE 3RD. P.M., IN WILL COUNTY, ILLINOIS.

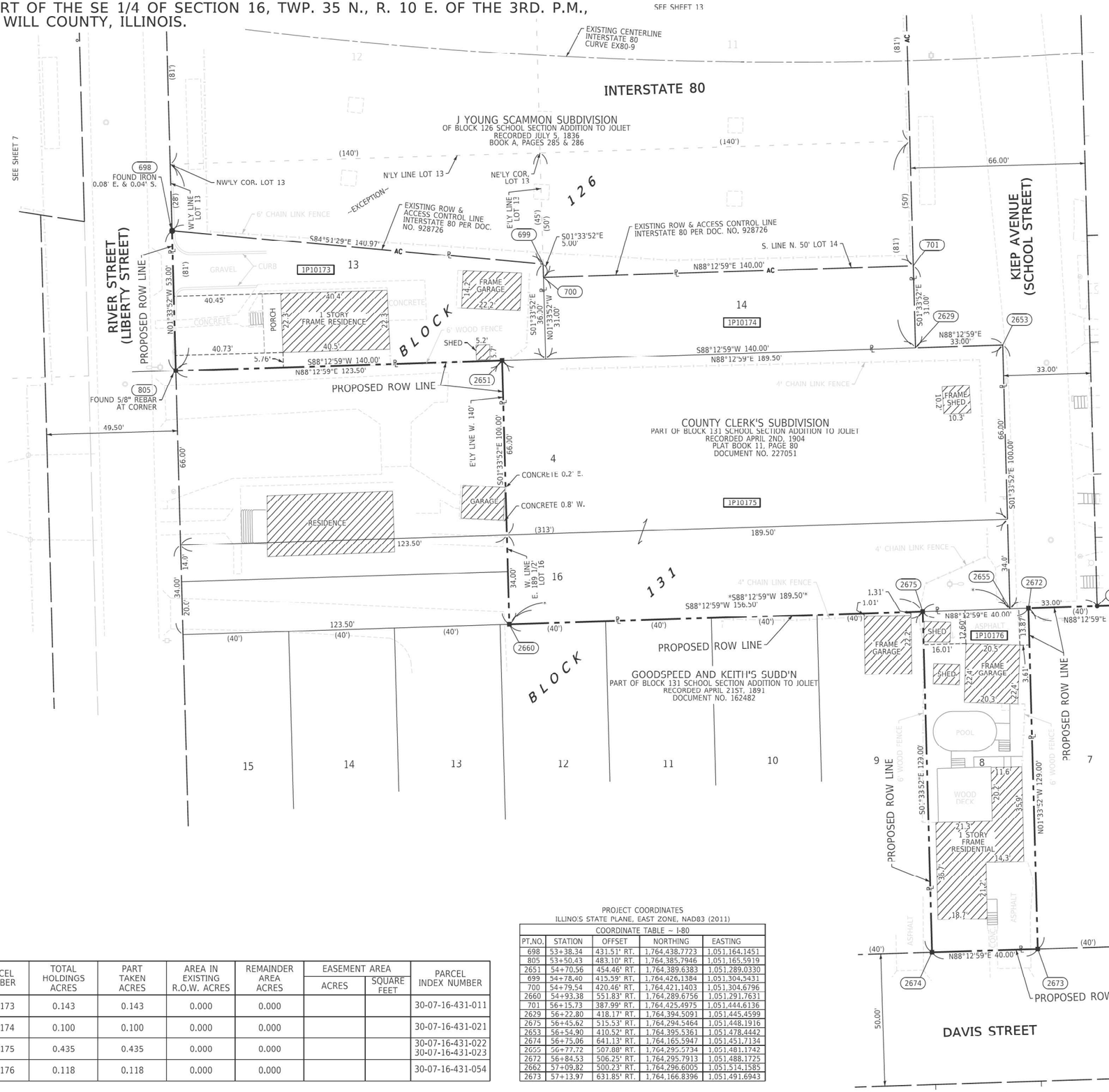

EXISTING CENTERLINE INTERSTATE 80 CURVE EX80-9

Δ = 29°40'17"
D = 03°15'19"
R = 1760.16'
T = 466.23'
L = 911.53'
E = 60.70'

LEGEND

SECTION CORNER

QUARTER SECTION CORNER

GRAPHIC SCALE FEET

SCALE: 1" = 20'

	SECTION / QUARTER SECTION LINE
	PLATTED LOT LINES
℄	PROPERTY (DEED) LINE
APL	APPARENT PROPERTY LINE
	EXISTING CENTERLINE
	PROPOSED CENTERLINE
	EXISTING RIGHT OF WAY LINE
	PROPOSED RIGHT OF WAY LINE
	EXISTING EASEMENT
	PROPOSED EASEMENT
AC	EXISTING ACCESS CONTROL LINE
AC	PROPOSED ACCESS CONTROL LINE
129.32'	MEASURED DIMENSION
129.32' (COMP)	COMPUTED DIMENSION
(129.32')	RECORDED DIMENSION
	EXISTING BUILDING

IRON PIPE OR ROD FOUND	"MAG" NAIL SET
CUT CROSS FOUND OR SET	5/8" REBAR SET

STAKING OF PROPOSED RIGHT OF WAY. SET DIVISION OF HIGHWAYS SURVEY MARKER TO MONUMENT THE POSITION SHOWN. IDENTIFIED BY INSCRIPTION DATA AND SURVEYORS REGISTRATION NUMBER.

■ M STAKING OF PROPOSED RIGHT OF WAY IN CULTIVATED AREAS. BURIED 5/8 INCH METAL ROD 20 INCHES BELOW GROUND TO MARK FUTURE SURVEY MARKER POSITION IDENTIFIED BY COLORED PLASTIC CAP BEARING SURVEYORS REGISTRATION NUMBER.

PERMANENT SURVEY MARKER, I.D.O.T. STANDARD 667101.02 (TO BE SET BY OTHERS)

RIGHT OF WAY STAKING PROPOSED TO BE SET

SURVEY NOTES:
1. ALL DIMENSIONS ARE MEASURED UNLESS OTHERWISE SPECIFIED.
2. BEARING, DISTANCES, AND COORDINATES SHOWN HEREON REFERENCE THE ILLINOIS STATE PLANE COORDINATE SYSTEM, EAST ZONE, NORTH AMERICAN DATUM OF 1983 (2011 ADJUSTMENT) "GRID". COORDINATES ARE FIXED HOLDING THE PUBLISHED NAD83(2011) VALUES FOR NGS CONTROL MONUMENTS WILL COUNTY GPS 713 (PID-AE2569), WILL COUNTY GPS 716 (PID-AE2570) AND WILL COUNTY GPS 718 (PID-AE2571).
3. ALL MEASURED AND CALCULATED DISTANCES ARE "GRID" NOT "GROUND". TO OBTAIN GROUND DISTANCES, DIVIDE GRID DISTANCES SHOWN BY THE COMBINATION FACTOR OF 0.99995667.
4. AREAS SHOWN ON THIS PLAT ARE "GROUND".
5. FIELD SURVEY COMPLETED IN DECEMBER 2021.

STATE OF ILLINOIS)
)SS
COUNTY OF WILL)

THIS IS TO CERTIFY THAT I, DAVID A. CLAASSEN, AN ILLINOIS PROFESSIONAL LAND SURVEYOR, (WE, CLAASSEN, WHITE & ASSOCIATES, P.C. AN ILLINOIS PROFESSIONAL DESIGN FIRM LAND SURVEYING CORPORATION, NUMBER 184-004039,) HAVE SURVEYED THE PLAT OF HIGHWAYS SHOWN HEREON IN SECTION 16, TOWNSHIP 35 NORTH, RANGE 10 EAST OF THE THIRD PRINCIPAL MERIDIAN, WILL COUNTY, THAT THE SURVEY IS TRUE AND COMPLETE AS SHOWN TO THE BEST OF MY KNOWLEDGE AND BELIEF, THAT THE PLAT CORRECTLY REPRESENTS SAID SURVEY, THAT ALL MONUMENTS FOUND AND ESTABLISHED ARE OF PERMANENT QUALITY AND OCCUPY THE POSITIONS SHOWN THEREON AND THAT THE MONUMENTS ARE SUFFICIENT TO ENABLE THE SURVEY TO BE RETRACED, MADE FOR THE DEPARTMENT OF TRANSPORTATION, STATE OF ILLINOIS.

DATED AT _____, ILLINOIS THIS __ DAY OF _____ 2024 A.D.

ILLINOIS PROFESSIONAL LAND SURVEYOR NO. 035-002962
LICENSE EXPIRATION DATE: NOVEMBER 30, 2026

THIS PROFESSIONAL SERVICE CONFORMS TO THE CURRENT ILLINOIS MINIMUM STANDARDS FOR A BOUNDARY SURVEY.

STATE OF ILLINOIS PROFESSIONAL LAND SURVEYOR
DAVID A. CLAASSEN
JOLIET, IL
NO. 2962

CWA SURVEY
CLAASSEN, WHITE & ASSOCIATES, P.C.
LAND SURVEYORS
121 AIRPORT DRIVE, UNIT 1, JOLIET, ILLINOIS 60431
(815) 744-3720 claassenwhite@cwasurvey.com
CWA Job #7577

PARCEL NUMBER	TOTAL HOLDINGS ACRES	PART TAKEN ACRES	AREA IN EXISTING R.O.W. ACRES	REMAINDER AREA ACRES	EASEMENT AREA		PARCEL INDEX NUMBER
					ACRES	SQUARE FEET	
1P10173	0.143	0.143	0.000	0.000			30-07-16-431-011
1P10174	0.100	0.100	0.000	0.000			30-07-16-431-021
1P10175	0.435	0.435	0.000	0.000			30-07-16-431-022 30-07-16-431-023
1P10176	0.118	0.118	0.000	0.000			30-07-16-431-054

PROJECT COORDINATES
ILLINOIS STATE PLANE, EAST ZONE, NAD83 (2011)

COORDINATE TABLE ~ I-80

PT.NO.	STATION	OFFSET	NORTHING	EASTING
698	53+38.34	431.51' RT.	1,764,438.7723	1,051,164.1451
805	53+50.43	483.10' RT.	1,764,385.7946	1,051,165.5919
2651	54+70.56	454.46' RT.	1,764,389.6383	1,051,289.0330
699	54+78.40	415.59' RT.	1,764,426.1384	1,051,304.5431
700	54+79.54	420.46' RT.	1,764,421.1403	1,051,304.6796
2660	54+95.38	551.83' RT.	1,764,289.6756	1,051,291.7631
701	56+15.73	387.99' RT.	1,764,425.4975	1,051,444.6136
2629	56+22.80	418.17' RT.	1,764,394.5091	1,051,445.4599
2675	56+45.62	515.53' RT.	1,764,294.5464	1,051,448.1916
2653	56+54.90	410.52' RT.	1,764,395.5361	1,051,478.4442
2674	56+75.06	641.13' RT.	1,764,165.5947	1,051,451.7134
2655	56+77.72	507.88' RT.	1,764,295.5734	1,051,481.1742
2672	56+84.53	506.25' RT.	1,764,295.7913	1,051,488.1725
2662	57+09.82	500.23' RT.	1,764,296.6005	1,051,514.1585
2673	57+13.97	631.85' RT.	1,764,166.8396	1,051,491.6943

REVISION DATE: / / REVISION MADE BY:

IDOT USE ONLY

APPROVED
By William Wright at 2:54 pm, Nov 13, 2024

PLAT OF HIGHWAYS

STATE OF ILLINOIS
DEPARTMENT OF TRANSPORTATION
I-80

LIMITS: RIDGE ROAD TO US 30 COUNTY: WILL
SECTION: JOB NO.: R-91-016-20
STA. 53+38.34 TO STA. 57+13.97
SCALE: 1" = 20' SHEET 420 OF 1230 SHEETS

BUREAU OF LAND ACQUISITION
201 WEST CENTER COURT
SCHAUMBURG, ILLINOIS 60196

PART OF THE SE 1/4 OF SECTION 16, TWP. 35 N., R. 10 E. OF THE 3RD. P.M.,
IN WILL COUNTY, ILLINOIS.

PROJECT COORDINATES
ILLINOIS STATE PLANE, EAST ZONE, NAD83 (2011)

COORDINATE TABLE ~ I-80

PT.NO.	STATION	OFFSET	NORTHING	EASTING
555	55+75.45	216.14' RT.	1,764,601.9306	1,051,439.7951
701	56+15.73	387.99' RT.	1,764,425.4975	1,051,444.6136
2629	56+22.80	418.17' RT.	1,764,394.5091	1,051,445.4599
556	56+40.45	204.25' RT.	1,764,600.4869	1,051,505.8591
2675	56+45.62	515.53' RT.	1,764,294.5464	1,051,448.1916
2653	56+54.90	410.52' RT.	1,764,395.5361	1,051,478.4442
2655	56+77.72	507.88' RT.	1,764,295.5734	1,051,481.1742
764	56+77.76	363.43' RT.	1,764,437.0484	1,051,510.3228
2672	56+84.53	506.25' RT.	1,764,295.7913	1,051,488.1725
557	57+07.40	183.14' RT.	1,764,607.6637	1,051,575.6905
2662	57+09.82	500.23' RT.	1,764,296.6005	1,051,514.1585
558	57+74.13	161.07' RT.	1,764,615.8401	1,051,645.4928
2626	58+21.30	370.44' RT.	1,764,400.9204	1,051,651.3624
2664	58+31.17	419.20' RT.	1,764,350.9390	1,051,652.7275
2665	58+36.23	444.73' RT.	1,764,324.7788	1,051,653.4419
2661	58+40.78	467.99' RT.	1,764,300.9577	1,051,654.0925
2402	59+37.67	301.50' RT.	1,764,445.7628	1,051,790.1907
804	59+44.54	341.29' RT.	1,764,403.2776	1,051,791.2964
766	59+73.90	335.39' RT.	1,764,406.1028	1,051,824.2862

PARCEL NUMBER	TOTAL HOLDINGS ACRES	PART TAKEN ACRES	AREA IN EXISTING R.O.W. ACRES	REMAINDER AREA ACRES	EASEMENT AREA ACRES	EASEMENT AREA SQUARE FEET	PARCEL INDEX NUMBER
1P10177	0.130	0.130	0.000	0.000			30-07-16-431-033
1P10178	0.161	0.161	0.000	0.000			30-07-16-431-034
1P10179	0.080	0.080	0.000	0.000			30-07-16-431-035
1P10180	0.080	0.080	0.000	0.000			30-07-16-431-036
1P10181	0.130	0.130	0.000	0.000			30-07-16-431-044

REVISION DATE: / / REVISION MADE BY:

LEGEND

SECTION CORNER
QUARTER SECTION CORNER

SECTION / QUARTER SECTION LINE
PLATTED LOT LINES
PROPERTY (DEED) LINE
APPARENT PROPERTY LINE
EXISTING CENTERLINE
PROPOSED CENTERLINE
EXISTING RIGHT OF WAY LINE
PROPOSED RIGHT OF WAY LINE
EXISTING EASEMENT
PROPOSED EASEMENT
EXISTING ACCESS CONTROL LINE
PROPOSED ACCESS CONTROL LINE
129.32' MEASURED DIMENSION
129.32' (COMP) COMPUTED DIMENSION
(129.32') RECORDED DIMENSION
EXISTING BUILDING

IRON PIPE OR ROD FOUND
"MAG" NAIL SET
CUT CROSS FOUND OR SET
5/8" REBAR SET

STAKING OF PROPOSED RIGHT OF WAY. SET DIVISION OF HIGHWAYS SURVEY MARKER TO MONUMENT THE POSITION SHOWN. IDENTIFIED BY INSCRIPTION DATA AND SURVEYORS REGISTRATION NUMBER.

STAKING OF PROPOSED RIGHT OF WAY IN CULTIVATED AREAS. BURIED 5/8 INCH METAL ROD 20 INCHES BELOW GROUND TO MARK FUTURE SURVEY MARKER POSITION IDENTIFIED BY COLORED PLASTIC CAP BEARING SURVEYORS REGISTRATION NUMBER.

PERMANENT SURVEY MARKER, I.D.O.T. STANDARD 667101.02 (TO BE SET BY OTHERS)

RIGHT OF WAY STAKING PROPOSED TO BE SET

GRAPHIC SCALE
FEET
SCALE: 1" = 20'

SURVEY NOTES:
1. ALL DIMENSIONS ARE MEASURED UNLESS OTHERWISE SPECIFIED.
2. BEARING, DISTANCES, AND COORDINATES SHOWN HEREON REFERENCE THE ILLINOIS STATE PLANE COORDINATE SYSTEM, EAST ZONE, NORTH AMERICAN DATUM OF 1983 (2011 ADJUSTMENT) "GRID". COORDINATES ARE FIXED HOLDING THE PUBLISHED NAD83(2011) VALUES FOR NGS CONTROL MONUMENTS WILL COUNTY GPS 713 (PID-AE2569), WILL COUNTY GPS 716 (PID-AE2570) AND WILL COUNTY GPS 718 (PID-AE2571).
3. ALL MEASURED AND CALCULATED DISTANCES ARE "GRID" NOT "GROUND". TO OBTAIN GROUND DISTANCES, DIVIDE GRID DISTANCES SHOWN BY THE COMBINATION FACTOR OF 0.99995667.
4. AREAS SHOWN ON THIS PLAT ARE "GROUND".
5. FIELD SURVEY COMPLETED IN DECEMBER 2021.

STATE OF ILLINOIS)
)SS
COUNTY OF WILL)

THIS IS TO CERTIFY THAT I, DAVID A. CLAASSEN, AN ILLINOIS PROFESSIONAL LAND SURVEYOR, (WE, CLAASSEN, WHITE & ASSOCIATES, P.C. AN ILLINOIS PROFESSIONAL DESIGN FIRM LAND SURVEYING CORPORATION, NUMBER 184-004039,) HAVE SURVEYED THE PLAT OF HIGHWAYS SHOWN HEREON IN SECTION 16, TOWNSHIP 35 NORTH, RANGE 10 EAST OF THE THIRD PRINCIPAL MERIDIAN, WILL COUNTY, THAT THE SURVEY IS TRUE AND COMPLETE AS SHOWN TO THE BEST OF MY KNOWLEDGE AND BELIEF, THAT THE PLAT CORRECTLY REPRESENTS SAID SURVEY, THAT ALL MONUMENTS FOUND AND ESTABLISHED ARE OF PERMANENT QUALITY AND OCCUPY THE POSITIONS SHOWN THEREON AND THAT THE MONUMENTS ARE SUFFICIENT TO ENABLE THE SURVEY TO BE RETRACED, MADE FOR THE DEPARTMENT OF TRANSPORTATION, STATE OF ILLINOIS.

DATED AT JOLIET, ILLINOIS THIS 16TH DAY OF JULY 2024 A.D.

ILLINOIS PROFESSIONAL LAND SURVEYOR NO. 035-002962
LICENSE EXPIRATION DATE: NOVEMBER 30, 2026

THIS PROFESSIONAL SERVICE CONFORMS TO THE CURRENT ILLINOIS MINIMUM STANDARDS FOR A BOUNDARY SURVEY.

STATE OF ILLINOIS DAVID A. CLAASSEN JOLIET, IL NO. 2962 PROFESSIONAL LAND SURVEYOR

CWA SURVEY
CLAASSEN, WHITE & ASSOCIATES, P.C.
LAND SURVEYORS
121 AIRPORT DRIVE, UNIT I, JOLIET, ILLINOIS 60431
(815) 744-3720 claassenwhite@cwasurvey.com
CWA Job #7577

PLAT OF HIGHWAYS

STATE OF ILLINOIS
DEPARTMENT OF TRANSPORTATION
I-80

LIMITS: RIDGE ROAD TO US 30 COUNTY: WILL
SECTION: JOB NO.: R-91-016-20
STA. 55+75.45 TO STA. 59+73.90
SCALE: 1" = 20' SHEET 421 OF 1230 SHEETS

IDOT USE ONLY

APPROVED
By William Wright at 2:55 pm, Nov 13, 2024

BUREAU OF LAND ACQUISITION
201 WEST CENTER COURT
SCHAUMBURG, ILLINOIS 60196

PART OF THE SE 1/4 OF SECTION 16, TWP. 35 N., R. 10 E. OF THE 3RD. P.M., IN WILL COUNTY, ILLINOIS.

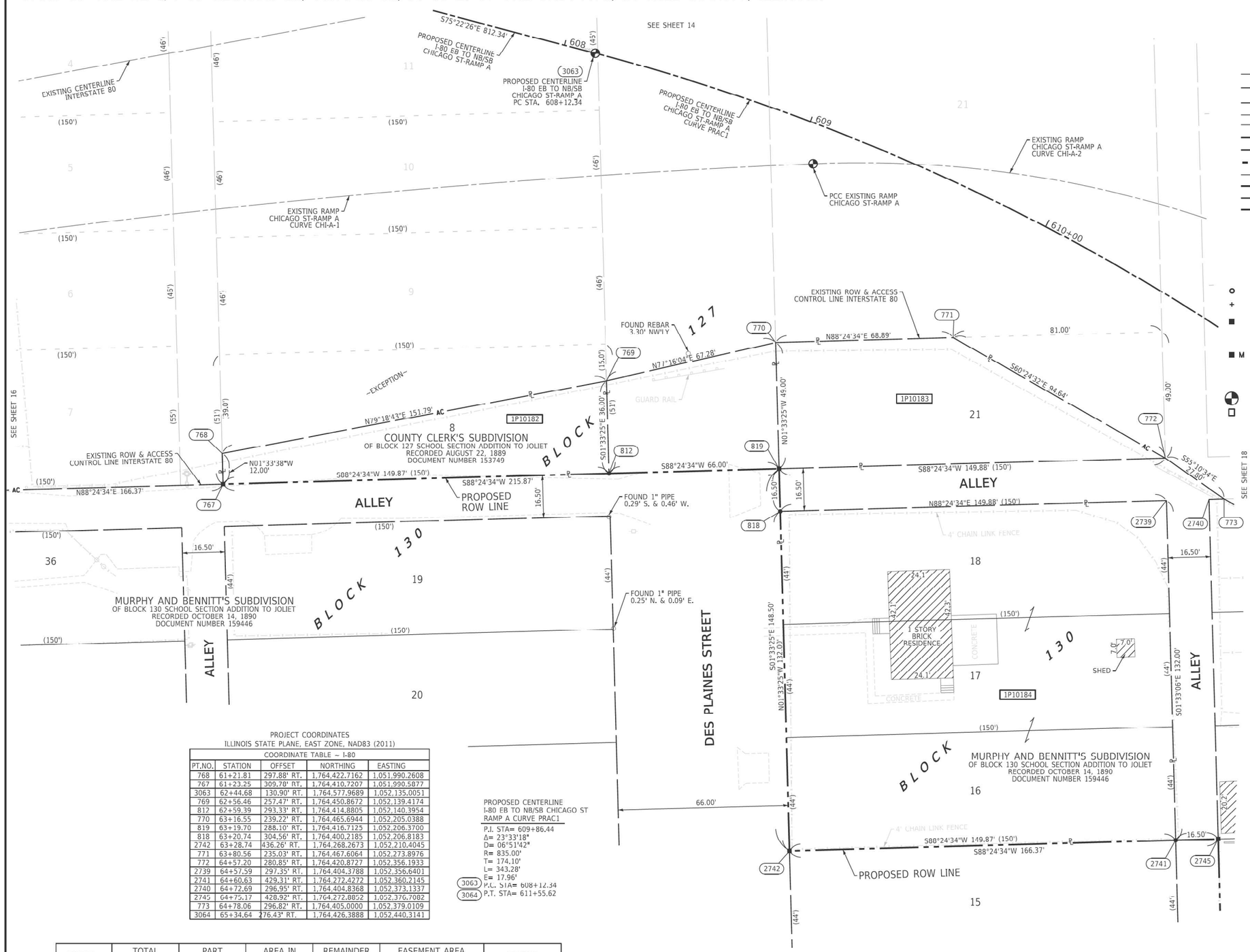

PROJECT COORDINATES
ILLINOIS STATE PLANE, EAST ZONE, NAD83 (2011)

COORDINATE TABLE ~ I-80

PT.NO.	STATION	OFFSET	NORTHING	EASTING
768	61+21.81	297.88' RT.	1,764,422.7162	1,051,990.2608
767	61+23.25	309.78' RT.	1,764,410.7207	1,051,990.5877
3063	62+44.68	130.90' RT.	1,764,577.9689	1,052,135.0051
769	62+56.46	257.47' RT.	1,764,450.8672	1,052,139.4174
812	62+59.39	293.33' RT.	1,764,414.8805	1,052,140.3954
770	63+16.55	239.22' RT.	1,764,465.6944	1,052,205.0388
819	63+19.70	288.10' RT.	1,764,416.7125	1,052,206.3700
818	63+20.74	304.56' RT.	1,764,400.2185	1,052,206.8183
2742	63+28.74	436.26' RT.	1,764,268.2673	1,052,210.4045
771	63+80.56	235.03' RT.	1,764,467.6064	1,052,273.8976
772	64+57.20	280.85' RT.	1,764,420.8727	1,052,356.1933
2739	64+57.59	297.35' RT.	1,764,404.3788	1,052,356.6401
2741	64+60.63	429.31' RT.	1,764,272.4272	1,052,360.2145
2740	64+72.69	296.95' RT.	1,764,404.8368	1,052,373.1337
2745	64+75.17	428.92' RT.	1,764,272.8852	1,052,376.7082
773	64+78.06	296.82' RT.	1,764,405.0000	1,052,379.0109
3064	65+34.64	276.43' RT.	1,764,426.3888	1,052,440.3141

PROPOSED CENTERLINE
I-80 EB TO NB/SB CHICAGO ST
RAMP A CURVE PRAC1

P.I. STA= 609+86.44
Δ= 23°33'18"
D= 06°51'42"
R= 835.00'
T= 174.10'
L= 343.28'
E= 17.96'
3063 P.C. STA= 608+12.34
3064 P.T. STA= 611+55.62

PARCEL NUMBER	TOTAL HOLDINGS ACRES	PART TAKEN ACRES	AREA IN EXISTING R.O.W. ACRES	REMAINDER AREA ACRES	EASEMENT AREA		PARCEL INDEX NUMBER
					ACRES	SQUARE FEET	
1P10182	0.083	0.083	0.000	0.000			30-07-16-433-031
1P10183	0.123	0.123	0.000	0.000			30-07-16-434-028
1P10184	0.454	0.454	0.000	0.000			30-07-16-434-003 30-07-16-434-004

LEGEND

SECTION CORNER

QUARTER SECTION CORNER

SECTION / QUARTER SECTION LINE
PLATTED LOT LINES
PROPERTY (DEED) LINE
APPARENT PROPERTY LINE
EXISTING CENTERLINE
PROPOSED CENTERLINE
EXISTING RIGHT OF WAY LINE
PROPOSED RIGHT OF WAY LINE
EXISTING EASEMENT
PROPOSED EASEMENT
EXISTING ACCESS CONTROL LINE
PROPOSED ACCESS CONTROL LINE
129.32' MEASURED DIMENSION
129.32' (COMP) COMPUTED DIMENSION
(129.32') RECORDED DIMENSION
EXISTING BUILDING

IRON PIPE OR ROD FOUND
CUT CROSS FOUND OR SET
"MAG" NAIL SET
5/8" REBAR SET

STAKING OF PROPOSED RIGHT OF WAY. SET DIVISION OF HIGHWAYS SURVEY MARKER TO MONUMENT THE POSITION SHOWN. IDENTIFIED BY INSCRIPTION DATA AND SURVEYORS REGISTRATION NUMBER.

STAKING OF PROPOSED RIGHT OF WAY IN CULTIVATED AREAS. BURIED 5/8 INCH METAL ROD 20 INCHES BELOW GROUND TO MARK FUTURE SURVEY MARKER POSITION IDENTIFIED BY COLORED PLASTIC CAP BEARING SURVEYORS REGISTRATION NUMBER.

PERMANENT SURVEY MARKER, I.D.O.T. STANDARD 667101.02 (TO BE SET BY OTHERS)

RIGHT OF WAY STAKING PROPOSED TO BE SET

GRAPHIC SCALE
FEET
SCALE: 1" = 20'

SURVEY NOTES:
1. ALL DIMENSIONS ARE MEASURED UNLESS OTHERWISE SPECIFIED.
2. BEARING, DISTANCES, AND COORDINATES SHOWN HEREON REFERENCE THE ILLINOIS STATE PLANE COORDINATE SYSTEM, EAST ZONE, NORTH AMERICAN DATUM OF 1983 (2011 ADJUSTMENT) "GRID". COORDINATES ARE FIXED HOLDING THE PUBLISHED NAD83(2011) VALUES FOR NGS CONTROL MONUMENTS WILL COUNTY GPS 713 (PID-AE2569), WILL COUNTY GPS 716 (PID-AE2570) AND WILL COUNTY GPS 718 (PID-AE2571).
3. ALL MEASURED AND CALCULATED DISTANCES ARE "GRID" NOT "GROUND". TO OBTAIN GROUND DISTANCES, DIVIDE GRID DISTANCES SHOWN BY THE COMBINATION FACTOR OF 0.99995667.
4. AREAS SHOWN ON THIS PLAT ARE "GROUND".
5. FIELD SURVEY COMPLETED IN DECEMBER 2021.

STATE OF ILLINOIS)
)SS
COUNTY OF WILL)

THIS IS TO CERTIFY THAT I, DAVID A. CLAASSEN, AN ILLINOIS PROFESSIONAL LAND SURVEYOR, (WE, CLAASSEN, WHITE & ASSOCIATES, P.C. AN ILLINOIS PROFESSIONAL DESIGN FIRM LAND SURVEYING CORPORATION, NUMBER 184-004039,) HAVE SURVEYED THE PLAT OF HIGHWAYS SHOWN HEREON IN SECTION 16, TOWNSHIP 35 NORTH, RANGE 10 EAST OF THE THIRD PRINCIPAL MERIDIAN, WILL COUNTY, THAT THE SURVEY IS TRUE AND COMPLETE AS SHOWN TO THE BEST OF MY KNOWLEDGE AND BELIEF, THAT THE PLAT CORRECTLY REPRESENTS SAID SURVEY, THAT ALL MONUMENTS FOUND AND ESTABLISHED ARE OF PERMANENT QUALITY AND OCCUPY THE POSITIONS SHOWN THEREON AND THAT THE MONUMENTS ARE SUFFICIENT TO ENABLE THE SURVEY TO BE RETRACED, MADE FOR THE DEPARTMENT OF TRANSPORTATION, STATE OF ILLINOIS.

DATED AT _____, ILLINOIS THIS __ DAY OF _____ 2024 A.D.

ILLINOIS PROFESSIONAL LAND SURVEYOR NO. 035-002962
LICENSE EXPIRATION DATE: NOVEMBER 30, 2026

THIS PROFESSIONAL SERVICE CONFORMS TO THE CURRENT ILLINOIS MINIMUM STANDARDS FOR A BOUNDARY SURVEY.

STATE OF ILLINOIS
DAVID A. CLAASSEN
JOLIET, IL
NO. 2962
PROFESSIONAL LAND SURVEYOR

CWA SURVEY

CLAASSEN, WHITE & ASSOCIATES, P.C.
LAND SURVEYORS
121 AIRPORT DRIVE, UNIT 1, JOLIET, ILLINOIS 60431
(815) 744-3720 claassenwhite@cwasurvey.com
CWA Job #7577

PLAT OF HIGHWAYS

STATE OF ILLINOIS
DEPARTMENT OF TRANSPORTATION
I-80

LIMITS: RIDGE ROAD TO US 30 COUNTY: WILL
SECTION: JOB NO.: R-91-016-20
STA. 61+21.81 TO STA. 64+78.06
SCALE: 1" = 20' SHEET 422 OF 1230 SHEETS

BUREAU OF LAND ACQUISITION
201 WEST CENTER COURT
SCHAUMBURG, ILLINOIS 60196

IDOT USE ONLY

APPROVED
By William Wright at 2:55 pm, Nov 13, 2024

REVISION DATE: / / REVISION MADE BY:

PART OF THE SE 1/4 OF SECTION 16, TWP. 35 N., R. 10 E. OF THE 3RD. P.M., IN WILL COUNTY, ILLINOIS.

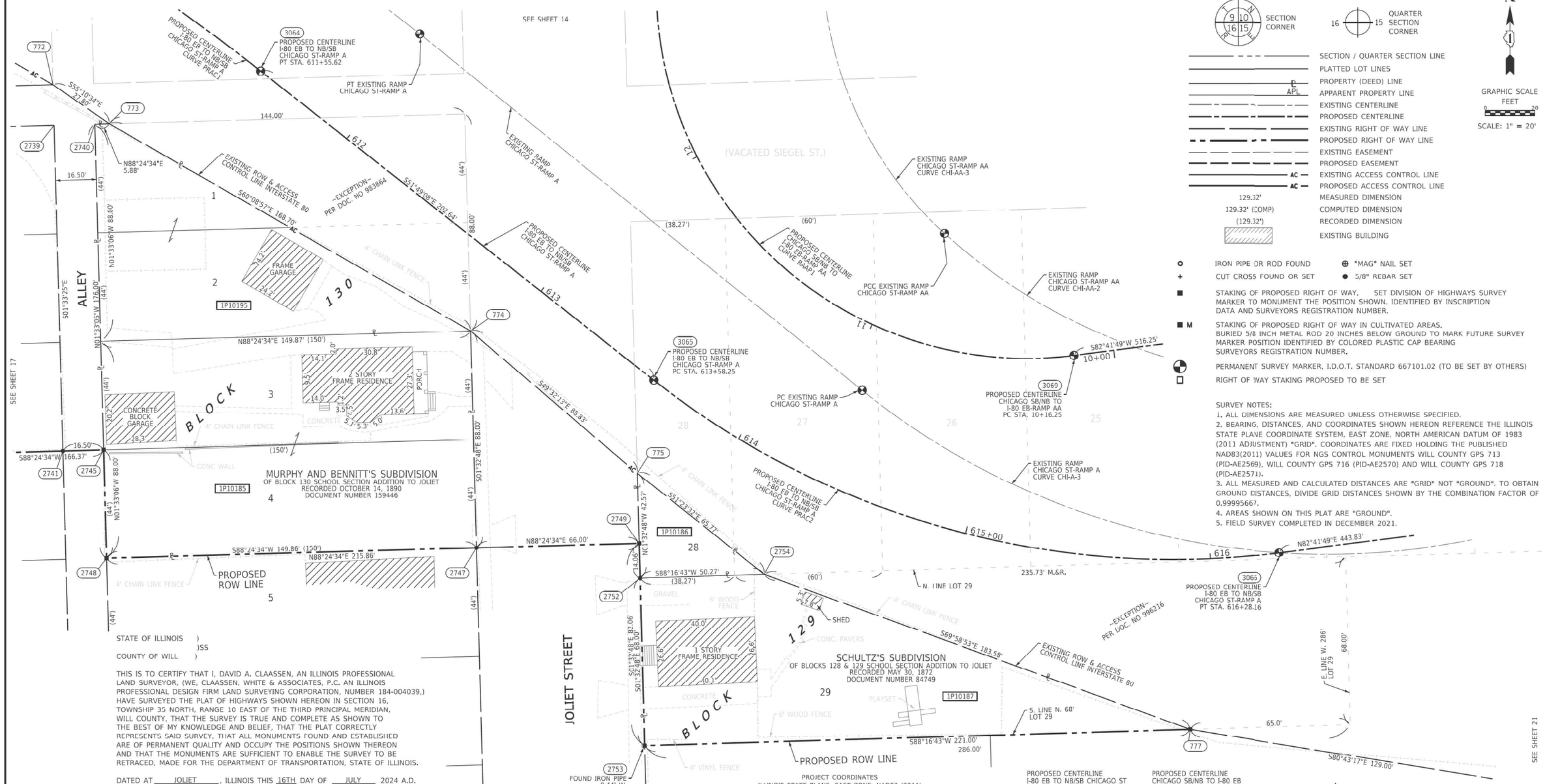

LEGEND

SECTION CORNER

QUARTER SECTION CORNER

GRAPHIC SCALE FEET

SCALE: 1" = 20'

- SECTION / QUARTER SECTION LINE
- PLATTED LOT LINES
- PROPERTY (DEED) LINE
- APPARENT PROPERTY LINE
- EXISTING CENTERLINE
- PROPOSED CENTERLINE
- EXISTING RIGHT OF WAY LINE
- PROPOSED RIGHT OF WAY LINE
- EXISTING EASEMENT
- PROPOSED EASEMENT
- EXISTING ACCESS CONTROL LINE
- PROPOSED ACCESS CONTROL LINE
- 129.32' MEASURED DIMENSION
- 129.32' (COMP) COMPUTED DIMENSION
- (129.32') RECORDED DIMENSION
- EXISTING BUILDING
- IRON PIPE OR ROD FOUND
- "MAG" NAIL SET
- CUT CROSS FOUND OR SET
- 5/8" REBAR SET
- STAKING OF PROPOSED RIGHT OF WAY. SET DIVISION OF HIGHWAYS SURVEY MARKER TO MONUMENT THE POSITION SHOWN. IDENTIFIED BY INSCRIPTION DATA AND SURVEYORS REGISTRATION NUMBER.
- M STAKING OF PROPOSED RIGHT OF WAY IN CULTIVATED AREAS. BURIED 5/8 INCH METAL ROD 20 INCHES BELOW GROUND TO MARK FUTURE SURVEY MARKER POSITION IDENTIFIED BY COLORED PLASTIC CAP BEARING SURVEYORS REGISTRATION NUMBER.
- PERMANENT SURVEY MARKER, I.D.O.T. STANDARD 667101.02 (TO BE SET BY OTHERS)
- RIGHT OF WAY STAKING PROPOSED TO BE SET

SURVEY NOTES:

1. ALL DIMENSIONS ARE MEASURED UNLESS OTHERWISE SPECIFIED.
2. BEARING, DISTANCES, AND COORDINATES SHOWN HEREON REFERENCE THE ILLINOIS STATE PLANE COORDINATE SYSTEM, EAST ZONE, NORTH AMERICAN DATUM OF 1983 (2011 ADJUSTMENT) "GRID". COORDINATES ARE FIXED HOLDING THE PUBLISHED NAD83(2011) VALUES FOR NGS CONTROL MONUMENTS WILL COUNTY GPS 713 (PID-AE2569), WILL COUNTY GPS 716 (PID-AE2570) AND WILL COUNTY GPS 718 (PID-AE2571).
3. ALL MEASURED AND CALCULATED DISTANCES ARE "GRID" NOT "GROUND". TO OBTAIN GROUND DISTANCES, DIVIDE GRID DISTANCES SHOWN BY THE COMBINATION FACTOR OF 0.99995667.
4. AREAS SHOWN ON THIS PLAT ARE "GROUND".
5. FIELD SURVEY COMPLETED IN DECEMBER 2021.

STATE OF ILLINOIS)
)SS
COUNTY OF WILL)

THIS IS TO CERTIFY THAT I, DAVID A. CLAASSEN, AN ILLINOIS PROFESSIONAL LAND SURVEYOR, (WE, CLAASSEN, WHITE & ASSOCIATES, P.C. AN ILLINOIS PROFESSIONAL DESIGN FIRM LAND SURVEYING CORPORATION, NUMBER 184-004039,) HAVE SURVEYED THE PLAT OF HIGHWAYS SHOWN HEREON IN SECTION 16, TOWNSHIP 35 NORTH, RANGE 10 EAST OF THE THIRD PRINCIPAL MERIDIAN, WILL COUNTY, THAT THE SURVEY IS TRUE AND COMPLETE AS SHOWN TO THE BEST OF MY KNOWLEDGE AND BELIEF, THAT THE PLAT CORRECTLY REPRESENTS SAID SURVEY, THAT ALL MONUMENTS FOUND AND ESTABLISHED ARE OF PERMANENT QUALITY AND OCCUPY THE POSITIONS SHOWN THEREON AND THAT THE MONUMENTS ARE SUFFICIENT TO ENABLE THE SURVEY TO BE RETRACED, MADE FOR THE DEPARTMENT OF TRANSPORTATION, STATE OF ILLINOIS.

DATED AT JOLIET, ILLINOIS THIS 16TH DAY OF JULY 2024 A.D.

ILLINOIS PROFESSIONAL LAND SURVEYOR NO. 035-002962
LICENSE EXPIRATION DATE: NOVEMBER 30, 2026

THIS PROFESSIONAL SERVICE CONFORMS TO THE CURRENT ILLINOIS MINIMUM STANDARDS FOR A BOUNDARY SURVEY.

STATE OF ILLINOIS · DAVID A. CLAASSEN · JOLIET, IL · NO. 2962 · PROFESSIONAL LAND SURVEYOR

PARCEL NUMBER	TOTAL HOLDINGS ACRES	PART TAKEN ACRES	AREA IN EXISTING R.O.W. ACRES	REMAINDER AREA ACRES	EASEMENT AREA		PARCEL INDEX NUMBER
					ACRES	SQUARE FEET	
1P10185	0.303	0.303	0.000	0.000			30-07-16-434-021 30-07-16-434-029(pt)
1P10186	0.025	0.025	0.000	0.000			30-07-16-436-002
1P10187	0.212	0.212	0.000	0.000			30-07-16-436-014
1P10195	0.157	0.157	0.000	0.000			30-07-16-434-029(pt)

PROJECT COORDINATES
ILLINOIS STATE PLANE, EAST ZONE, NAD83 (2011)

COORDINATE TABLE ~ I-80

PT.NO.	STATION	OFFSET	NORTHING	EASTING
3063	62+44.68	130.90' RT.	1,764,577.9689	1,052,135.0051
772	64+57.20	280.85' RT.	1,764,420.8727	1,052,356.1933
2739	64+57.59	297.35' RT.	1,764,404.3788	1,052,356.6401
2741	64+60.63	429.31' RT.	1,764,272.4272	1,052,360.2145
2740	64+72.69	296.95' RT.	1,764,404.8368	1,052,373.1337
2745	64+75.17	428.92' RT.	1,764,272.8852	1,052,376.7082
2748	64+75.96	472.91' RT.	1,764,228.9013	1,052,377.8997
773	64+78.06	296.82' RT.	1,764,405.0000	1,052,379.0109
3064	65+34.64	276.43' RT.	1,764,426.3888	1,052,440.3141
2747	66+06.54	472.82' RT.	1,764,233.0611	1,052,527.7057
774	66+08.15	384.84' RT.	1,764,321.0290	1,052,525.3306
2753	66+61.31	556.72' RT.	1,764,152.8624	1,052,595.8952
2752	66+63.53	488.77' RT.	1,764,220.8348	1,052,594.0599
2749	66+64.00	474.72' RT.	1,764,234.8930	1,052,593.6803
775	66+64.97	446.24' RT.	1,764,263.3855	1,052,592.9110
3065	66+73.08	409.02' RT.	1,764,301.1803	1,052,590.5977
2754	67+07.09	490.89' RT.	1,764,222.3448	1,052,644.3072
3066	68+87.49	504.46' RT.	1,764,231.1494	1,052,852.9881
3070	67+50.74	135.34' RT.	1,764,580.6866	1,052,661.5755
3069	68+24.00	414.60' RT.	1,764,311.2136	1,052,769.7159

PROPOSED CENTERLINE I-80 EB TO NB/SB CHICAGO ST RAMP A CURVE PRAC1

P.I. STA= 609+86.44
Δ= 23°33'18"
D= 06°51'42"
R= 835.00'
T= 174.10'
L= 343.28'
E= 17.96'
3063 P.C. STA= 608+12.34
3064 P.T. STA= 611+55.62

PROPOSED CENTERLINE CHICAGO SB/NB TO I-80 EB RAMP AA CURVE RAAP1

P.I. STA= 15+93.65
Δ= 150°52'29"
D= 38°11'50"
R= 150.00'
T= 577.40'
L= 394.99'
E= 446.57'
3069 P.C. STA= 10+16.25
3070 P.C.C. STA= 14+11.24

PROPOSED CENTERLINE I-80 EB TO NB/SB CHICAGO ST RAMP A CURVE PRAC2

P.I. STA= 615+00.77
Δ= 45°29'03"
D= 16°51'06"
R= 340.00'
T= 142.52'
L= 269.91'
E= 28.66'
3065 P.C. STA= 613+58.25
3066 P.T. STA= 616+28.16

CWA SURVEY

CLAASSEN, WHITE & ASSOCIATES, P.C.
LAND SURVEYORS
121 AIRPORT DRIVE, UNIT I, JOLIET, ILLINOIS 60431
(815) 744-3720 claassenwhite@cwasurvey.com
CWA Job #7577

PLAT OF HIGHWAYS

STATE OF ILLINOIS
DEPARTMENT OF TRANSPORTATION
I-80

LIMITS: RIDGE ROAD TO US 30 COUNTY: WILL
SECTION: JOB NO.: R-91-016-20
STA. 64+57.20 TO STA. 68+87.49
SCALE: 1" = 20' SHEET 423 OF 1230 SHEETS

IDOT USE ONLY

APPROVED
By William Wright at 2:56 pm, Nov 13, 2024

BUREAU OF LAND ACQUISITION
201 WEST CENTER COURT
SCHAUMBURG, ILLINOIS 60196

REVISION DATE: / / REVISION MADE BY:

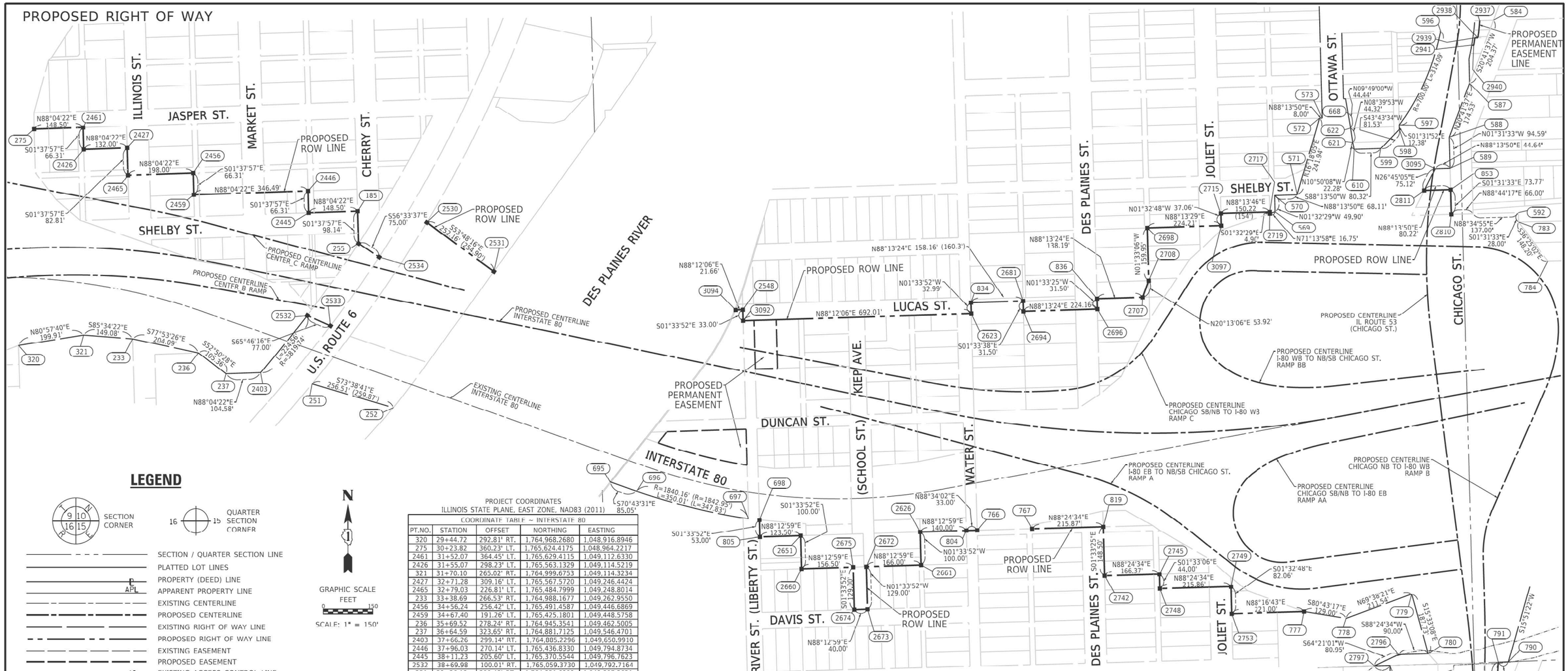

LEGEND

SECTION CORNER

QUARTER SECTION CORNER

SECTION / QUARTER SECTION LINE
PLATTED LOT LINES
PROPERTY (DEED) LINE
APPARENT PROPERTY LINE
EXISTING CENTERLINE
PROPOSED CENTERLINE
EXISTING RIGHT OF WAY LINE
PROPOSED RIGHT OF WAY LINE
EXISTING EASEMENT
PROPOSED EASEMENT
EXISTING ACCESS CONTROL LINE
PROPOSED ACCESS CONTROL LINE
129.32' MEASURED DIMENSION
129.32' (COMP) COMPUTED DIMENSION
(129.32') RECORDED DIMENSION
EXISTING BUILDING

IRON PIPE OR ROD FOUND
"MAG" NAIL SET
CUT CROSS FOUND OR SET
5/8" REBAR SET

STAKING OF PROPOSED RIGHT OF WAY. SET DIVISION OF HIGHWAYS SURVEY MARKER TO MONUMENT THE POSITION SHOWN. IDENTIFIED BY INSCRIPTION DATA AND SURVEYORS REGISTRATION NUMBER.

■ M STAKING OF PROPOSED RIGHT OF WAY IN CULTIVATED AREAS. BURIED 5/8 INCH METAL ROD 20 INCHES BELOW GROUND TO MARK FUTURE SURVEY MARKER POSITION IDENTIFIED BY COLORED PLASTIC CAP BEARING SURVEYORS REGISTRATION NUMBER.

PERMANENT SURVEY MARKER, I.D.O.T. STANDARD 667101.02 (TO BE SET BY OTHERS)

RIGHT OF WAY STAKING PROPOSED TO BE SET

SURVEY NOTES:
1. ALL DIMENSIONS ARE MEASURED UNLESS OTHERWISE SPECIFIED.
2. BEARING, DISTANCES, AND COORDINATES SHOWN HEREON REFERENCE THE ILLINOIS STATE PLANE COORDINATE SYSTEM, EAST ZONE, NORTH AMERICAN DATUM OF 1983 (2011 ADJUSTMENT) "GRID". COORDINATES ARE FIXED HOLDING THE PUBLISHED NAD83(2011) VALUES FOR NGS CONTROL MONUMENTS WILL COUNTY GPS 713 (PID-AE2569), WILL COUNTY GPS 716 (PID-AE2570) AND WILL COUNTY GPS 718 (PID-AE2571).
3. ALL MEASURED AND CALCULATED DISTANCES ARE "GRID" NOT "GROUND". TO OBTAIN GROUND DISTANCES, DIVIDE GRID DISTANCES SHOWN BY THE COMBINATION FACTOR OF 0.99995667.
4. AREAS SHOWN ON THIS PLAT ARE "GROUND".
5. FIELD SURVEY COMPLETED IN DECEMBER 2021.

N

GRAPHIC SCALE
FEET
0 150
SCALE: 1" = 150'

PROJECT COORDINATES
ILLINOIS STATE PLANE, EAST ZONE, NAD83 (2011)

COORDINATE TABLE ~ INTERSTATE 80

PT.NO.	STATION	OFFSET	NORTHING	EASTING
320	29+44.72	292.81' RT.	1,764,968.2680	1,048,916.8946
275	30+23.82	360.23' LT.	1,765,624.4175	1,048,964.2217
2461	31+52.07	364.45' LT.	1,765,629.4115	1,049,112.6330
2426	31+55.07	298.23' LT.	1,765,563.1329	1,049,114.5219
321	31+70.10	265.02' RT.	1,764,999.6753	1,049,114.3234
2427	32+71.28	309.16' LT.	1,765,567.5720	1,049,246.4424
2465	32+79.03	226.81' LT.	1,765,484.7999	1,049,248.8014
233	33+38.69	266.53' RT.	1,764,988.1677	1,049,262.9550
2456	34+56.24	256.42' LT.	1,765,491.4587	1,049,446.6869
2459	34+67.40	191.26' LT.	1,765,425.1801	1,049,448.5758
236	35+69.52	278.24' RT.	1,764,945.3541	1,049,462.5005
237	36+64.59	323.65' RT.	1,764,881.7125	1,049,546.4701
2403	37+66.26	299.14' RT.	1,764,885.2296	1,049,650.9910
2446	37+96.03	270.14' LT.	1,765,436.8330	1,049,794.8734
2445	38+11.23	205.60' LT.	1,765,370.5544	1,049,796.7623
2532	38+69.98	100.01' RT.	1,765,059.3730	1,049,792.7164
251	39+26.18	300.48' RT.	1,764,851.6909	1,049,807.3621
2533	39+45.13	116.81' RT.	1,765,027.7724	1,049,862.9365
185	39+55.59	240.40' LT.	1,765,375.5485	1,049,945.1744
255	39+78.10	144.88' LT.	1,765,277.4500	1,049,947.9702
2534	40+47.73	117.01' LT.	1,765,236.1204	1,050,010.5551
2530	41+67.92	249.20' LT.	1,765,341.3780	1,050,154.9166
252	41+81.81	321.63' RT.	1,764,779.4596	1,050,053.4922
2531	43+97.25	144.35' LT.	1,765,192.4647	1,050,358.4131
695	48+11.70	410.05' RT.	1,764,553.8298	1,050,711.4029
696	49+55.99	421.37' RT.	1,764,525.7551	1,050,791.6856
3094	51+39.40	177.79' LT.	1,765,075.6558	1,051,092.0752
2548	51+60.46	182.82' LT.	1,765,076.3354	1,051,113.7204
3092	51+67.99	150.69' LT.	1,765,043.3474	1,051,114.6214
697	53+05.21	434.78' RT.	1,764,442.2408	1,051,131.0380
698	53+38.34	431.51' RT.	1,764,438.7723	1,051,164.1451
805	53+50.43	483.10' RT.	1,764,385.7946	1,051,165.5919
2651	54+70.56	454.46' RT.	1,764,389.6383	1,051,289.0330
2660	54+93.30	551.03' RT.	1,764,289.6750	1,051,291.7031
2675	56+45.62	515.53' RT.	1,764,294.5464	1,051,448.1916
2674	56+75.06	641.13' RT.	1,764,165.5947	1,051,451.7134
2672	56+84.53	506.25' RT.	1,764,295.7913	1,051,488.1725
2673	57+13.97	631.85' RT.	1,764,166.8396	1,051,491.6943
2626	58+21.30	370.44' RT.	1,764,400.9204	1,051,651.3624
834	58+37.00	343.32' LT.	1,765,098.0426	1,051,805.3888
2661	58+40.78	467.99' RT.	1,764,300.9577	1,051,654.0925
2623	58+44.98	311.12' LT.	1,765,065.0630	1,051,806.2895
804	59+44.54	341.29' RT.	1,764,405.2776	1,051,791.2964
766	59+73.90	335.39' RT.	1,764,406.1028	1,051,824.2862
2681	60+11.72	374.23' LT.	1,765,102.9460	1,051,963.4753
2694	60+17.54	343.16' LT.	1,765,071.4575	1,051,964.3332
767	61+23.25	309.78' RT.	1,764,410.7207	1,051,990.5877
836	62+64.80	403.27' LT.	1,765,109.8956	1,052,187.5305
2696	62+67.88	371.88' LT.	1,765,078.4070	1,052,188.3863
819	63+19.70	288.10' RT.	1,764,416.7125	1,052,206.3700
2742	63+28.74	436.26' RT.	1,764,268.2673	1,052,210.4045
2707	64+22.86	412.32' LT.	1,765,114.1800	1,052,325.6580
2698	64+38.05	622.91' LT.	1,765,324.6709	1,052,339.9631
2708	64+44.06	463.04' LT.	1,765,164.7821	1,052,344.2944
2745	64+75.17	428.92' RT.	1,764,272.8852	1,052,376.7082
2748	64+75.96	472.91' RT.	1,764,228.9013	1,052,377.8997
2753	66+61.31	556.72' RT.	1,764,152.8624	1,052,595.8952
2749	66+64.00	474.72' RT.	1,764,234.8930	1,052,593.6803
3097	67+16.44	621.24' LT.	1,765,331.6165	1,052,564.0686
2715	67+19.00	658.25' LT.	1,765,368.6642	1,052,563.0683

PROJECT COORDINATES
ILLINOIS STATE PLANE, EAST ZONE, NAD83 (2011)

COORDINATE TABLE ~ INTERSTATE 80

PT.NO.	STATION	OFFSET	NORTHING	EASTING
777	68+48.85	570.85' RT.	1,764,159.5007	1,052,816.7968
2719	69+06.38	641.20' LT.	1,765,368.4105	1,052,713.3460
2717	69+07.08	646.06' LT.	1,765,373.3054	1,052,713.2143
569	69+26.99	644.25' LT.	1,765,373.7998	1,052,729.2068
570	69+34.67	693.77' LT.	1,765,423.6781	1,052,727.8645
778	69+52.86	609.16' RT.	1,764,138.7010	1,052,944.1089
2797	70+03.07	765.99' RT.	1,763,993.9065	1,053,029.8324
571	70+20.72	684.76' LT.	1,765,425.7811	1,052,795.9434
2789	704+01.22	772.96' RT.	1,763,995.2076	1,053,076.6911
2796	704+32.99	744.49' RT.	1,764,028.9454	1,053,102.8017
572	704+91.95	900.93' LT.	1,765,657.9916	1,052,863.8524
573	704+99.86	899.73' LT.	1,765,658.2387	1,052,871.8486
779	705+05.06	571.30' RT.	1,764,212.3027	1,053,142.4329
780	705+21.93	758.27' RT.	1,764,031.4435	1,053,192.7671
621	705+77.53	811.07' LT.	1,765,585.0544	1,052,964.2437
610	705+77.70	788.79' LT.	1,765,563.1731	1,052,968.4318
622	705+78.87	855.37' LT.	1,765,628.8696	1,052,957.5667
668	705+79.32	899.81' LT.	1,765,672.6570	1,052,949.9900
2946	706+48.73	1053.83' RT.	1,763,763.6209	1,053,370.8189
599	706+57.12	776.74' LT.	1,765,565.6532	1,053,048.7177
792	706+64.21	955.00' RT.	1,763,863.6198	1,053,368.2150
2945	706+76.13	1017.88' RT.	1,763,803.9273	1,053,391.2895
598	707+23.18	824.53' LT.	1,765,624.5721	1,053,105.0731
597	707+25.09	836.76' LT.	1,765,636.9476	1,053,104.7423
791	707+25.48	822.37' RT.	1,764,005.1312	1,053,404.5403
790	707+55.39	826.66' RT.	1,764,006.3092	1,053,434.7406
2811	707+63.24	627.13' LT.	1,765,437.6478	1,053,180.0939
3095	708+08.60	687.00' LT.	1,765,504.7237	1,053,213.9051
2810	708+31.17	542.21' LT.	1,765,366.3804	1,053,262.2424
853	708+42.55	615.10' LT.	1,765,440.1247	1,053,260.2780
589	708+52.73	680.31' LT.	1,765,506.1019	1,053,258.5204
588	708+67.31	773.76' LT.	1,765,600.6535	1,053,256.0016
596	708+99.94	1094.51' LT.	1,765,922.0267	1,053,230.2045
587	709+57.44	923.22' LT.	1,765,763.9243	1,053,317.6756
2941	709+84.55	1035.15' LT.	1,765,878.9046	1,053,324.1386
2940	709+90.18	1033.09' LT.	1,765,877.8930	1,053,330.0527

STATE OF ILLINOIS)
)SS
COUNTY OF WILL)

THIS IS TO CERTIFY THAT I, DAVID A. CLAASSEN, AN ILLINOIS PROFESSIONAL LAND SURVEYOR, (WE, CLAASSEN, WHITE & ASSOCIATES, P.C. AN ILLINOIS PROFESSIONAL DESIGN FIRM LAND SURVEYING CORPORATION, NUMBER 184-004039,) HAVE SURVEYED THE PLAT OF HIGHWAYS SHOWN HEREON IN SECTION 16, TOWNSHIP 35 NORTH, RANGE 10 EAST OF THE THIRD PRINCIPAL MERIDIAN, WILL COUNTY, THAT THE SURVEY IS TRUE AND COMPLETE AS SHOWN TO THE BEST OF MY KNOWLEDGE AND BELIEF, THAT THE PLAT CORRECTLY REPRESENTS SAID SURVEY, THAT ALL MONUMENTS FOUND AND ESTABLISHED ARE OF PERMANENT QUALITY AND OCCUPY THE POSITIONS SHOWN THEREON AND THAT THE MONUMENTS ARE SUFFICIENT TO ENABLE THE SURVEY TO BE RETRACED, MADE FOR THE DEPARTMENT OF TRANSPORTATION, STATE OF ILLINOIS.

DATED AT _____, ILLINOIS THIS___ DAY OF _____ 2024 A.D.

ILLINOIS PROFESSIONAL LAND SURVEYOR NO. 035-002962
LICENSE EXPIRATION DATE: NOVEMBER 30, 2026

THIS PROFESSIONAL SERVICE CONFORMS TO THE CURRENT ILLINOIS MINIMUM STANDARDS FOR A BOUNDARY SURVEY.

STATE OF ILLINOIS
DAVID A. CLAASSEN
JOLIET, IL
NO. 2962
PROFESSIONAL LAND SURVEYOR

PROJECT COORDINATES
ILLINOIS STATE PLANE, EAST ZONE, NAD83 (2011)

COORDINATE TABLE ~ INTERSTATE 80

PT.NO.	STATION	OFFSET	NORTHING	EASTING
2939	709+97.77	1054.76' LT.	1,765,900.5777	1,053,333.6096
2938	710+06.79	1053.35' LT.	1,765,900.8234	1,053,342.7320
2937	710+21.80	1104.65' LT.	1,765,953.9907	1,053,348.2316
783	710+27.34	482.68' LT.	1,765,343.2342	1,053,465.9311
592	710+31.66	510.35' LT.	1,765,371.2243	1,053,465.1854
584	710+62.98	1098.24' LT.	1,765,955.1127	1,053,389.8951
784	710+92.36	349.51' LT.	1,765,223.9749	1,053,553.9121

REVISION DATE: __/__/__ REVISION MADE BY: _____

CWA SURVEY

CLAASSEN, WHITE & ASSOCIATES, P.C.
LAND SURVEYORS
121 AIRPORT DRIVE, UNIT I, JOLIET, ILLINOIS 60431
(815) 744-3720 claassenwhite@cwasurvey.com
CWA Job #7577

PLAT OF HIGHWAYS

STATE OF ILLINOIS
DEPARTMENT OF TRANSPORTATION
I-80

LIMITS: RIDGE ROAD TO US 30 COUNTY: WILL
SECTION: JOB NO.: R-91-016-20
STA. 29+44.72 TO STA. 710+92.36
SCALE: 1" = 150' SHEET 424 OF 1230 SHEETS

IDOT USE ONLY

APPROVED
By William Wright at 2:58 pm, Nov 13, 2024

BUREAU OF LAND ACQUISITION
201 WEST CENTER COURT
SCHAUMBURG, ILLINOIS 60196

PAVEMENT MARKING AND SIGINING GENERAL NOTES

1. PAVEMENT MARKINGS AND RAISED REFLECTIVE PAVEMENT MARKERS SHALL BE PLACED IN ACCORDANCE WITH IDOT DISTRICT 1 STANDARD DETAILS TC-11, TC-12, AND TC-13.

2. FINAL SIGN LOCATIONS MAY VARY DUE TO FIELD CONDITIONS, EXACT LOCATIONS ARE AT THE DISCRETION OF THE ENGINEER TO ENSURE SIGNS ARE NOT PLACED IN THE LINE OF SIGHT OF OTHER SIGNS.

3. ALL POST MOUNTED SIGNS SHALL BE MOUNTED ON TELESCOPING STEEL SIGN SUPPORTS IN ACCORDANCE WITH HIGHWAY STANDARD 728001 UNLESS OTHERWISE NOTED.

4. A RED REFLECTIVE STRIP, 2" X 48", SHALL BE INSTALLED ON ALL "STOP", "DO NOT ENTER", AND "WRONG WAY" SIGN PANEL SUPPORTS. THE REFLECTIVE STRIP SHALL BE RED, TYPE ZZ SHEETING AND ATTACHED AT THE FRONT OF THE SIGN SUPPORTS FOR ALL "DO NOT ENTER", "STOP", AND "WRONG WAY" SIGNS. THE COST OF THE RED REFLECTIVE STRIP SHALL BE INCLUDED IN THE COST FOR THE SIGN SUPPORT.

GENERAL SIGN SEQUENCE NUMBERING CODE

EB-OS-0380

DIRECTION OF TRAFFIC

NB - NORTH BOUND
WB - WEST BOUND
SB - SOUTH BOUND
EB - EAST BOUND

MOUNTING TYPE

OS - OVERHEAD SPAN
OC - OVERHEAD CANTILEVER
BM - BRIDGE MOUNTED
WP - WOOD POST
TS - TELESCOPING STEEL SUPPORT
EP - ELECTRIC POLE MOUNTED
LP - LIGHT POLE MOUNTED
GM - GROUND MOUNTED/BREAKWAY

SIGN PANEL ID NUMBER

EXISTING ALIGNMENT - EXISTING SIGNS
PROPOSED ALIGNMENT - PROPOSED SIGNS

GENERAL SIGNING LEGEND

I-80	INTERSTATE 80
RVR	RIVER STREET
JLT	JOLIET STREET
SLB	SHELBY STREET
CHR	CHERRY STREET
US6	US ROUTE 6
WTR	WATER STREET
LCS	LUCAS STREET
KP	KEIP AVENUE
RD	ROAD
ST	STREET
AVE	AVENUE
℄	CENTERLINE
⅊	BASELINE
R	REMOVE SIGN PANEL AND SUPPORT (NO REPLACEMENT)
PR	NEW SIGN ON NEW SIGN SUPPORT(S)
REM	EXISTING SIGN TO REMAIN
W/G	WHITE/GREEN
B/Y	BLACK/YELLOW
B/W	BLACK/WHITE
W/BL	WHITE/BLUE
W/R	WHITE/RED
W/BR	WHITE/BROWN
R+B/W	RED+BLACK/WHITE
R/W	RED/WHITE

	THERMOPLASTIC PAVEMENT MARKING - LINE 4"						FOOT
LOCATION	STATION	STATION	OFFSET	NO. OF LINES	TYPE	DIRECTION OF TRAVEL	
RIVER ST	100+95	114+85	CL	2	DOUBLE YELLOW CL	NB / SB	2858.0
US RTE 6	210+89	232+93	LT	1	WHITE EDGE LINE	SB	2417
US RTE 6	210+89	232+93	LT	1	10' LINE, 30' SKIP	SB	610.0
US RTE 6	210+89	232+94	CL	2	DOUBLE YELLOW CL	NB / SB	4834.0
US RTE 6	210+89	232+99	RT	1	10' LINE, 30' SKIP	NB	610.0
US RTE 6	210+89	233+05	RT	1	WHITE EDGE LINE	NB	2417.0
						TOTAL:	13746

	THERMOPLASTIC PAVEMENT MARKING - LINE 6"							FOOT
LOCATION	STATION	STATION	OFFSET	AVG. LENGTH (FT.)	NO. OF LINES	TYPE	DIRECTION OF TRAVEL	
LUCAS ST	400+24	400+30	LT/RT	35	2	CROSSWALK, PEDESTRIAN	WB / EB	70
							TOTAL:	70

	THERMOPLASTIC PAVEMENT MARKING - LINE 12"					FOOT
LOCATION	STATION	STATION	OFFSET	TYPE	DIRECTION OF TRAVEL	
RIVER ST	100+57	100+63	LT/RT	LONGITUDINAL BARS, SCHOOL	WB / EB	54
RIVER ST	102+75	103+05	LT/RT	LONGITUDINAL BARS, SCHOOL	NB / SB	60
WATER ST	307+67	307+73	LT/RT	LONGITUDINAL BARS, SCHOOL	WB / EB	60
RIVER ST	114+82	114+96	LT/RT	LONGITUDINAL BARS, SCHOOL	WB / EB	66
JASPER ST	89+65	89+78	LT/RT	LONGITUDINAL BARS, SCHOOL	WB / EB	66
					TOTAL:	306

LOCATION	STATION	STATION	OFFSET	TYPE	DIRECTION OF TRAVEL	
DAVIS ST AT RIVER ST	10082	10095	RT	STOP LINE	NB	13.0
CHERRY AT US RTE 6	50026		LT	STOP LINE	SB	18.3
JASPER ST AT CHERRY ST	50445	50460	LT	STOP LINE	SB	15.0
US RTE 6 AT MCDONOUGH ST	23294		RT	STOP LINE	NB	27.0
CHERRY ST AT US RTE 6	30798	30812	LT	STOP LINE	SB	14.0
LUCAS ST AT WATER ST	40034		LT	STOP LINE	SB	14.5
					TOTAL:	102

	RAISED REFLECTIVE PAVEMENT MARKER					EACH
LOCATION	STATION	STATION	OFFSET	TYPE	DIRECTION OF TRAVEL	
RIVER ST	100+95	109+00	LT/RT	TWO-WAY AMBER	NB/SB	81.0
RIVER ST	109+00	114+79	LT/RT	TWO-WAY AMBER	EB/WB	87.0
US RTE 6	214+54	221+75	LT/RT	ONE-WAY CRYSTAL	NB/SB	37.0
US RTE 6	226+15	233+22	LT/RT	ONE-WAY CRYSTAL	SB	18.0
US RTE 6	214+54	221+75	LT	TWO-WAY AMBER	NB/SB	73.0
US RTE 6	226+15	233+22	LT/RT	TWO-WAY AMBER	NB/SB	71.0
					TOTAL:	367

	REPLACEMENT REFLECTOR					EACH
LOCATION	STATION	STATION	OFFSET	TYPE	DIRECTION OF TRAVEL	
US RTE 6	208+83	214+54	LT/RT	ONE-WAY CRYSTAL	NB/SB	29.0
US RTE 6	221+75	226+15	LT	ONE-WAY CRYSTAL	SB	11.0
US RTE 6	221+75	232+98	RT	ONE-WAY CRYSTAL	NB	29.0
US RTE 6	208+83	214+54	LT/RT	TWO-WAY AMBER	NB/SB	58.0
US RTE 6	221+75	232+98	LT/RT	TWO-WAY AMBER	NB/SB	113.0
					TOTAL:	240

MODEL: Pavement Marking Schedule-I
FILE NAME: pw://transystems-pw.bentley.com:transyscorp-pw1-hosted/Documents/Projects_2018/CH401/401180022/03-WSP/CAD/62R23-RB-1/Sheets/Civil/D162R23-sht-schedule_PavementMarkings.dgn

Accurate GROUP, INC.

USER NAME = jploquinto	DESIGNED - JLS	REVISED -
	DRAWN - JLS	REVISED -
PLOT SCALE = 100.000 ' / in.	CHECKED - DJC	REVISED -
PLOT DATE = 11/6/2025	DATE - 11/7/2025	REVISED -

STATE OF ILLINOIS
DEPARTMENT OF TRANSPORTATION

PAVEMENT MARKING SCHEDULE
I-80 AND LOCAL ROADS

SCALE: NONE | SHEET 1 OF 1 SHEETS | STA. TO STA.

F.A.I. RTE.	SECTION	COUNTY	TOTAL SHEETS	SHEET NO.
80	FAI 80 21 STRUCTURE 2	WILL	1230	426
		CONTRACT NO. 62R23		
		ILLINOIS	FED. AID PROJECT	

I-80 ROADWAY SIGNING REMOVAL SCHEDULE

SIGN ID	LEGEND/DESCRIPTION	COLOR	ALIGNMENT/ DIRECTION	STATION	OFFSET	W (IN)	H (IN)	AREA (SQ FT)	REMOVE SIGN PANEL T1 SQ FT	REMOVE SIGN PANEL T2 SQ FT	REMOVE SIGN PANEL T3 SQ FT	REMOVE SIGN PANEL ASSEMBLY TY A	REMOVE SIGN PANEL ASSEMBLY TY B	REMOVE OH SIGN STR- SPAN EACH	REMOVE GR MT SIGN SUPPORT EACH	REMOVE CONC FDN- GR MT EACH	REMOVE CONC FDN- OVHD EACH	REMOVE FLASHING BEACON AND ELEC-COMP EACH
EB-LP-6710	W4-2 RIGHT LANE ENDS	BLACK/YELLOW	EX I-80 EB	671+90	73" LT	48	48	16		16								
EB-LP-6730A	R2-1 SPEED LIMIT 55	BLACK/WHITE	EX I-80 EB	673+14	83' RT	48	60	20		20								
EB-LP-6730B	R2-I102 MINIMUM 45	BLACK/WHITE	EX I-80 EB	673+14	83' RT	48	36	12		12								
EB-LP-6920A	M3-2 EAST	WHITE/BLUE	EX I-80 EB	692+20	62' RT	36	18	4.5	4.5									
EB-LP-6920B	M1-1 INTERSTATE 80	WHITE/BLUE	EX I-80 EB	692+20	62' RT	36	36	9	9									
WB-LP-6940A	R2-1 SPEED LIMIT 55	BLACK/WHITE	EX I-80 WB	694+69	79' LT	48	60	20		20								
WB-LP-6940B	R2-I102 MINIMUM 45	BLACK/WHITE	EX I-80 WB	694+69	79' LT	48	36	12		12								
WB-GM-6950	DES PLAINES RIVER	WHITE/GREEN	EX CL I-80	695+20	94' LT	72	30	15		15						2	2	
WB-WP-6951A	W8-5 SLIPPERY WHEN WET	BLACK/YELLOW	EX CL I-80	695+07	11' LT	48	48	16					1					1
WB-WP-6951B	W13-1P 45 MPH	BLACK/YELLOW	EX CL I-80	695+07	11' LT	30	30	6.3										
WB-WP-6952A	W8-5 SLIPPERY WHEN WET	BLACK/YELLOW	EX CL I-80	695+42	88' LT	48	48	16					1					1
WB-WP-6952B	W13-1P 45 MPH	BLACK/YELLOW	EX CL I-80	695+42	88' LT	30	30	6.3										
EB-OS-6970	EXIT 133 \ RICHARDS ST \ 1/2 MILE	WHITE/GREEN	EX CL I-80	697+22	23' RT	180	102	127.5			127.5							
EB-OS-6971	EXIT 132B \ US 52 WEST \ ILLINOIS 53 NORTH \ CHICAGO ST \ 1/4 MILE	WHITE/GREEN	EX CL I-80	697+22	44' RT	174	168	203.0			203			1			2	
EB-OS-6972	EXIT 132A \ US 52 EAST \ ILLINOIS 53 SOUTH \ CHICAGO ST	WHITE/GREEN	EX CL I-80	697+22	66' RT	186	168	217.0			217							
EB-LP-6973	W13-2 EXIT 40 MPH	BLACK/YELLOW	EX CL I-80	697+22	92' RT	36	48	12		12								
WB-LP-6980	W4-1	BLACK/YELLOW	EX CL I-80	698+78	74' LT	48	48	16		16								
EB-TS-7021	W4-1 MERGE	BLACK/YELLOW	EX CL I-80	702+70	74' RT	48	48	16.0		16								
EB-WP-6981	E5-1a EXIT 132 A, GORE SIGN	WHITE/GREEN	EX CL I-80	698+80	77' RT	96	60	40			40							
EB-LP-6960 A	M3-2	BLACK/WHITE	EX CL I-80	696+14	83' RT	36	18	4.5	4.5									
EB-LP-6960 B	M1-I100	BLACK/WHITE	EX CL I-80	696+14	83' RT	36	36	9	9									
EB-LP-6960 C	M6-2	BLACK/WHITE	EX CL I-80	696+14	83' RT	30	21	4.4	4.4									
WB-GM-7000	RIVERBOAT CASINO \ HARRAH'S \ EXIT 131	WHITE/BROWN	EX CL I-80	700+49	92' LT	180	90	112.5			112.5				2	2		
WB-GM-7010	MEADOW AVE \ WEIGHT LIMIT 8 TONS \ USE ILLINOIS 7 SOUTH \ LARKIN AVE \ EXIT 130A	WHITE/GREEN	EX CL I-80	701+70	94' LT	156	180	195			195				2	2		
EB-WP-7020	AMTRAK \ METRA \ PARK & RIDE \ EXIT 132B	WHITE/GREEN	EX CL I-80	702+03	80' RT	150	180	187.5			187.5							
WB-WP-7100	W4-1	BLACK/YELLOW	EX CL I-80	709+86	72' LT	48	48	16		16								
NB-TS-0292 A	M3-2 EAST	WHITE/BLUE	EX CL CHICAGO ST	29+84	CL	24	12	2										
NB-TS-0292 B	M1-1 INTERSTATE 80	WHITE/BLUE	EX CL CHICAGO ST	29+84	CL	24	24	4				1						
NB-TS-0292 C	M6-1	WHITE/BLUE	EX CL CHICAGO ST	29+84	CL	21	15	2.2										
NB-TS-0360	W13-3 RAMP 20 MPH	BLACK/YELLOW	EX CL CHICAGO ST	36+47	51' RT	36	48	12		12								
NB-TS-0330 A	M3-4	WHITE/BLUE	EX CL CHICAGO ST	33+24	57' RT	36	18	4.5										
NB-TS-0330 B	M1-1	WHITE/BLUE	EX CL CHICAGO ST	33+24	57' RT	36	36	9					1					
NB-TS-0330 C	M5-1R	WHITE/BLUE	EX CL CHICAGO ST	33+24	57' RT	21	15	2.2										
NB-TS-0331A	M4-5	WHITE/BLUE	EX CL CHICAGO ST	33+24	57' RT	36	18	4.5										
NB-TS-0331B	M1-1	WHITE/BLUE	EX CL CHICAGO ST	33+24	57' RT	36	36	9					1					
NB-TS-0331C	M5-2R	WHITE/BLUE	EX CL CHICAGO ST	33+24	57' RT	21	15	2.2										

MODEL: Removal Signing Schedules - I
FILE NAME: pw://transystems-pw.bentley.com:transyscorp-pw1-hosted/Documents/Projects_2018/CH401/401180022/03-WSP/CAD/62R23-RB-1/Sheets/Civil/D162R23-sht-schedule_Signing.dgn

Accurate GROUP, INC.

USER NAME = jpioquinto	DESIGNED - JLS	REVISED -	
	DRAWN - JLS	REVISED -	
PLOT SCALE = 100.000 ' / in.	CHECKED - AB	REVISED -	
PLOT DATE = 11/5/2025	DATE - 11/7/2025	REVISED -	

STATE OF ILLINOIS
DEPARTMENT OF TRANSPORTATION

SIGNING REMOVAL SCHEDULE
I-80

SCALE: NONE | SHEET 1 OF 8 SHEETS | STA. | TO STA.

F.A.I. RTE.	SECTION	COUNTY	TOTAL SHEETS	SHEET NO.
80	FAI 80 21 STRUCTURE 2	WILL	1230	427

CONTRACT NO. 62R23

ILLINOIS | FED. AID PROJECT

I-80 ROADWAY SIGNING REMOVAL SCHEDULE

SIGN ID	LEGEND/DESCRIPTION	COLOR	ALIGNMENT/ DIRECTION	STATION	OFFSET	W (IN)	H (IN)	AREA (SQ FT)	REMOVE SIGN PANEL T1 SQ FT	REMOVE SIGN PANEL T2 SQ FT	REMOVE SIGN PANEL T3 SQ FT	REMOVE SIGN PANEL ASSEMBLY TY A	REMOVE SIGN PANEL ASSEMBLY TY B	REMOVE OH SIGN STR-SPAN EACH	REMOVE GR MT SIGN SUPPORT EACH	REMOVE CONC FDN-GR MT EACH	REMOVE CONC FDN-OVHD EACH	REMOVE FLASHING BEACON AND ELEC-COMP EACH
RBC-LP-0020 A	M3-4	WHITE/BLUE	EX BL RAMP BC	20+40	15' RT	24	12	2										
RBC-LP-0020 B	M1-1	WHITE/BLUE	EX BL RAMP BC	20+40	15' RT	24	24	4				1						
RBC-LP-0020 C	M6-2	WHITE/BLUE	EX BL RAMP BC	20+40	15' RT	21	15	2.2										
RBC-LP-0021A	M4-5	WHITE/BLUE	EX BL RAMP BC	20+40	15' RT	24	12	2										
RBC-LP-0021B	M1-1	WHITE/BLUE	EX BL RAMP BC	20+40	15' RT	24	24	4				1						
RBC-LP-0021C	M6-2	WHITE/BLUE	EX BL RAMP BC	20+40	15' RT	21	15	2.2										
RAC-LP-0060	R5-I100	BLACK/WHITE	EX BL RAMP AC	6+97	12' RT	48	60	20		20								
RC-WP-0060	M4-2-MERGE	BLACK/YELLOW	PR BL RAMP C	WB	6' LT	48	48	16.0		16								
SB-LP-0400 A	M3-4	WHITE/BLUE	EX CL CHICAGO ST	40+89	38' LT	24	12	2										
SB-LP-0400 B	M1-1	WHITE/BLUE	EX CL CHICAGO ST	40+89	38' LT	24	24	4				1						
SB-LP-0400 C	M6-2	WHITE/BLUE	EX CL CHICAGO ST	40+89	38' LT	21	15	2.2										
WB-WP-7250	W4-3 R ADDED LANE	BLACK/YELLOW	EX CL I-80	725+51	69' LT	48	48	16		16								
SB-LP-0270	R2-1	BLACK/WHITE	EX CL CHICAGO ST	27+54	45 'LT	30	36	7.5	7.5									
SB-LP-0220	W6-1	BLACK/YELLOW	EX CL CHICAGO ST	22+14	30' RT	36	36	9	9									
								TOTAL	48	219	1083	4	4	1	4	6	4	2

LOCAL ROADS SIGNING REMOVAL SCHEDULE

SIGN ID	LEGEND/DESCRIPTION	COLOR	ALIGNMENT/ DIRECTION	STATION	OFFSET	W (IN)	H (IN)	AREA (SQ FT)	REMOVE SIGN PANEL T1 SQ FT	REMOVE SIGN PANEL ASSEMBLY TY A EACH	REMOVE SIGN PANEL ASSEMBLY TY B EACH
RVR-NB-TS-1000	R1-1 STOP	WHITE/RED	RIVER ST NB	100+98	29' RT	30	30	6.3	6.3		
KP-SB-TS-6000	R1-1 STOP	WHITE/RED	KIEP AVE SB	600+85	35' RT	30	30	6.3	6.3		
KP-SB-TS-6001	D3-1 DUNCAN ST	WHITE/GREEN	KIEP AVE SB	600+97	2' RT	42	12	3.5			
KP-SB-TS-6002	D3-1 KIEP ST	WHITE/GREEN	KIEP AVE SB	600+97	2' RT	30	12	2.5		1	
KP-SB-TS-6003	R7-1 NO PARKING ANY TIME	RED/WHITE	KIEP AVE SB	600+97	2' RT	30	30	6.3			
KP-SB-TS-6004	W14-1 DEAD END	BLACK/YELLOW	KIEP AVE SB	600+95	35' RT	30	30	6.3	6.3		
KP-SB-TS-6012	R7-1 NO PARKING ANY TIME	RED/WHITE	KIEP AVE SB	601+04	54' RT	12	18	1.5	1.5		
KP-SB-TS-6013	R1-1 STOP	WHITE/RED	KIEP AVE SB	601+53	10' LT	30	30	6.3	6.3		
KP-SB-TS-6014	R7-1 NO PARKING ANY TIME	RED/WHITE	KIEP ST SB	601+21	398' RT	12	18	1.5	1.5		
KP-SB-TS-6015	OM1-3	YELLOW	KIEP ST SB	601+35	437' RT	30	30	6.3	6.3		
KP-SB-TS-6016	OM1-3	YELLOW	KIEP ST SB	601+43	437' RT	30	30	6.3	6.3		
CHR-SB-TS-5000	R1-1 STOP	WHITE/RED	CHERRY ST SB	500+36	24' LT	30	30	6.3	6.3		
CHR-SB-TS-5010	D3-1 CHERRY ST	WHITE/GREEN	CHERRY ST SB	501+47	23' LT	24	12	2			
CHR-SB-TS-5011	D3-1 SHELBY ST	WHITE/GREEN	CHERRY ST SB	501+49	23' LT	24	12	2		1	
CHR-SB-TS-5040	D3-1 CHERRY ST	WHITE/GREEN	CHERRY ST SB	504+33	21' LT	24	12	2			
CHR-SB-TS-5041	D3-1 JASPER ST	WHITE/GREEN	CHERRY ST SB	504+33	21' LT	24	12	2		1	

LOCAL ROADS SIGNING REMOVAL SCHEDULE

SIGN ID	LEGEND/DESCRIPTION	COLOR	ALIGNMENT/ DIRECTION	STATION	OFFSET	W (IN)	H (IN)	AREA (SQ FT)	REMOVE SIGN PANEL T1 SQ FT	REMOVE SIGN PANEL ASSEMBLY TY A EACH	REMOVE SIGN PANEL ASSEMBLY TY B EACH
US6-NB-TS-2320A	R1-1 STOP	WHITE/RED	US RTE 6 NB	232+45	27' RT	36	36	9			
US6-NB-TS-2320B	W4-4P	BLACK/YELLOW	US RTE 6 NB	232+45	27' RT	24	12	2.0			1
WTR-SB-TS-3010	R7-1 NO PARKING ANY TIME	RED/WHITE	WATER ST SB	301+77	10' LT	12	18	1.5	1.5		
WTR-SB-TS-3040	R7-1 NO PARKING ANY TIME	RED/WHITE	WATER ST SB	304+18	10' LT	12	18	1.5	1.5		
WTR-SB-TS-3041	W1-8 CHEVRON ALIGNMENT	BLACK/YELLOW	WATER ST SB	304+56	14' LT	18	24	3	3		
WTR-SB-TS-3042	R1-1 STOP	WHITE/RED	WATER ST SB	304+58	23' LT	30	30	6.3	6.3		
WTR-NB-TS-3043	R1-1 STOP	WHITE/RED	WATER ST NB	304+87	27' RT	30	30	6.3	6.3		
WTR-SB-TS-3044	R7-1R NO PARKING ANY TIME	RED/WHITE	WATER ST SB	304+89	22' LT	12	18	1.5	1.5		
WTR-SB-TS-3045	D3-1 W DUNCAN ST	WHITE/GREEN	WATER ST SB	304+90	24' LT	18	12	2	2		
WTR-SB-TS-3046	D3-1 S WATER ST	WHITE/GREEN	WATER ST SB	304+90	24' LT	18	12	2			
WTR-SB-TS-3047	D3-1 BISHOP ROBERT SANDERS DR	WHITE/BROWN	WATER ST SB	304+90	24' LT	24	12	2		1	
WTR-SB-TS-3048	R7-1L NO PARKING ANY TIME	RED/WHITE	WATER ST SB	304+90	24' LT	12	18	1.5	1.5		
WTR-NB-TS-3050	R2-1 SPEED LIMIT 25	BLACK/WHITE	WATER ST NB	305+57	23' RT	24	30	5	5		
WTR-SB-TS-3051	R7-1 NO PARKING ANY TIME	RED/WHITE	WATER ST SB	305+90	21' LT	12	18	1.5	1.5		

MODEL: Removal Signing Schedules - II
FILE NAME: pw://transystems-pw.bentley.com:transyscorp-pw1-hosted/Documents/Projects_2018/CH401/401180022/03-WSP/CAD/62R23-RB-1/Sheets/Civil/D162R23-sm-schedule_Signing.dgn

Accurate GROUP, INC.

USER NAME = jpioquinto	DESIGNED - JLS	REVISED -	
	DRAWN - JLS	REVISED -	
PLOT SCALE = 100.000 ' / in.	CHECKED - AB	REVISED -	
PLOT DATE = 11/6/2025	DATE - 11/7/2025	REVISED -	

STATE OF ILLINOIS
DEPARTMENT OF TRANSPORTATION

SIGNING REMOVAL SCHEDULE
LOCAL ROADS

SCALE: NONE | SHEET 2 OF 8 SHEETS | STA. | TO STA.

F.A.I. RTE.	SECTION	COUNTY	TOTAL SHEETS	SHEET NO.
80	FAI 80 21 STRUCTURE 2	WILL	1230	428
		CONTRACT NO. 62R23		
	ILLINOIS	FED. AID PROJECT		

LOCAL ROADS SIGNING REMOVAL SCHEDULE									REMOVE SIGN PANEL T1	REMOVE SIGN PANEL ASSEMBLY TY A	REMOVE SIGN PANEL ASSEMBLY TY B
SIGN ID	LEGEND/DESCRIPTION	COLOR	ALIGNMENT/ DIRECTION	STATION	OFFSET	W (IN)	H (IN)	AREA (SQ FT)	SQ FT	EACH	EACH
WTR-SB-TS-3070	R7-1 NO PARKING ANY TIME	RED/WHITE	WATER ST SB	307+37	21' LT	12	18	1.5	1.5		
WTR-SB-TS-3071	R1-1 STOP	WHITE/RED	WATER ST SB	307+93	30' LT	30	30	6.3	6.3		
WTR-NB-TS-3072	R2-1 SPEED LIMIT 25	BLACK/WHITE	WATER ST NB	307+98	21' RT	24	30	5	5		
WTR-SB-TS-3080	D3-1 WATER ST	WHITE/GREEN	WATER ST SB	308+93	30' LT	18	12	2	2		
JLT-NB-TS-6020	W14-1 DEAD END	BLACK/YELLOW	JOLIET ST NB	602+95	2'RT	30	30	6	6		
US6-NB-EP-2191	W10-3	BLACK/YELLOW	US RTE 6 NB	219+69	29'RT	36	36	9	9		
US6-NB-EP-2160	W11-10	YELLOW/BLACK	US RTE 6 NB	216+28	30'RT	36	36	9	9		
US6-SB-LP-2150	R2-1 SPEED LIMIT 40	YELLOW/BLACK	US RTE 6 NB	215+78	32'LT	24	30	5	5		
RVR-NB-TS-1060	R1-1 STOP	WHITE/RED	RIVER ST NB	106+56	1'RT	30	30	6	6		
LCS-EB-LP-1112	D3-1 LUCAS ST	WHITE/GREEN	LUCAS ST NB	111+59	23'RT	24	12	2	2		
LCS-EB-LP-1113	D3-1 KIEP AVE	WHITE/GREEN	LUCAS ST NB	111+59	23'RT	24	12	2	2		
RVR-NB-TS-1061	R1-1	WHITE/RED	RIVER ST NB	106+70	27'LT	30	30	6	6		
RVR-NB-LP-1062	R7-1	WHITE/RED	RIVER ST NB	106+91	15'LT	12	18	2	2		
RVR-NB-LP-1063	D3-1 RIVER ST	WHITE/GREEN	RIVER ST NB	106+91	15'LT	12	18	2	2		
RVR-NB-LP-1064	D3-1 DUNCAN ST	WHITE/GREEN	RIVER ST NB	106+91	15'LT	42	12	4	4		
								TOTAL	149	4	1

MODEL: Removal Signing Schedules - III
FILE NAME: pw://transystems-pw.bentley.com:transyscorp-pw1-hosted/Documents/Projects_2018/CH401/401180022/03-WSP/CAD/62R23-RB-1/Sheets/Civil/0162R23-sht-schedule_Signing.dgn

Accurate GROUP, INC.

USER NAME = jpioquinto	DESIGNED - JLS	REVISED -	
	DRAWN - JLS	REVISED -	
PLOT SCALE = 100.000 ' / in.	CHECKED - AB	REVISED -	
PLOT DATE = 11/5/2025	DATE - 11/7/2025	REVISED -	

STATE OF ILLINOIS
DEPARTMENT OF TRANSPORTATION

SIGNING REMOVAL SCHEDULE
LOCAL ROADS

SCALE: NONE | SHEET 3 OF 8 SHEETS | STA. TO STA.

F.A.I. RTE.	SECTION	COUNTY	TOTAL SHEETS	SHEET NO.
80	FAI 80 21 STRUCTURE 2	WILL	1230	429
		CONTRACT NO. 62R23		
		ILLINOIS	FED. AID PROJECT	

I-80 ROADWAY SIGNING TO REMAIN SCHEDULE

SIGN ID	STRUCTURE ID	LEGEND/DESCRIPTION	COLOR	ALIGNMENT/ DIRECTION	STATION	OFFSET	W (IN)	H (IN)	AREA (SQ FT)
WB-OS-7040	1S099I080L132.8	I-80 WEST \ IOWA	WHITE/GREEN	EX CL I-80	704+07	37' LT	-	-	-
WB-OS-7041	1S099I080L132.8	EXIT 131\ MEADOW AVE \ CENTER ST \ 3/4 MILE	WHITE/GREEN	EX CL I-80	704+07	49' LT	-	-	-
WB-OS-7042	1S099I080L132.8	EXIT 132 \ US 52 ILLINOIS 53 \ CHICAGO ST \ EXIT 25 MPH	WHITE/GREEN	EX CL I-80	704+07	67' LT	-	-	-
WB-TS-7152		OM3-L OBJECT MARKER	BLACK/YELLOW	PR CL I-80	715+93	63' LT	12	36	3.0
WB-TS-7153		OM3-R OBJECT MARKER	BLACK/YELLOW	PR CL I-80	715+85	14' LT	12	36	3.0
WB-TS-7230A		W8-5 SLIPPERY WHEN WET	BLACK/YELLOW	PR CL I-80	723+29	84' LT	48	48	16.0
WB-TS-7230B		W8-10P SLIPPERY WHEN WET	BLACK/YELLOW	PR CL I-80	723+29	84' LT	24	18	3.0
EB-WP-7380		W4-1 MERGE	BLACK/YELLOW	PR CL I-80	738+02	66' RT	48	48	16.0
RAD-TS-0020		R5-I100	BLACK/WHITE	EX BL RAMP AD	2+49	8' RT	48	60	20.0
RAD-TS-0030		W4-1 MERGE	BLACK/YELLOW	EX BL RAMP AD	3+94	23' RT	48	48	16.0
RAD-TS-0060		W1-8R CHEVRON ALIGNMENT	BLACK/YELLOW	EX BL RAMP AD	6+55	31' RT	30	36	7.5
RAD-TS-0080		W1-8R CHEVRON ALIGNMENT	BLACK/YELLOW	EX BL RAMP AD	8+05	24' RT	30	36	7.5
RCB-TS-0070A		W1-2 LEFT TURN	BLACK/YELLOW	EX BL RAMP CB	7+01	13' RT	48	48	16.0
RCB-TS-0070B		W13-1P 30 MPH	BLACK/YELLOW	EX BL RAMP CB	7+01	13' RT	30	30	6.3
RCB-LP-0100		R5-1a WRONG WAY	WHITE/RED	EX BL RAMP CB	10+30	12' RT	42	30	8.8
RCB-TS-0111		R5-1a WRONG WAY	WHITE/RED	EX BL RAMP CB	11+77	14' RT	42	30	8.8
RCB-TS-0120		R6-1 ONE WAY ARROW	WHITE/BLACK	EX BL RAMP CB	12+96	10' RT	54	18	6.8
RCB-TS-0121		R5-1 DO NOT ENTER	WHITE/RED	EX BL RAMP CB	12+96	10' RT	36	36	9.0
RCB-TS-0131		R6-1 ONE WAY ARROW	BLACK/WHITE	EX BL RAMP CB	13+73	46' RT	54	18	6.8
RDB-TS-0040		W1-8R CHEVRON ALIGNMENT	BLACK/YELLOW	EX BL RAMP DB	4+70	28' LT	30	36	7.5
RDB-TS-0050		W1-8R CHEVRON ALIGNMENT	BLACK/YELLOW	EX BL RAMP DB	5+93	24' LT	30	36	7.5
RDB-TS-0070		R5-1a WRONG WAY	WHITE/RED	EX BL RAMP DB	7+65	28' LT	42	30	8.8
RDB-TS-0071		R5-1a WRONG WAY	WHITE/RED	EX BL RAMP DB	7+66	14' RT	42	30	8.8
RDB-TS-0092		R5-1a WRONG WAY	WHITE/RED	EX BL RAMP DB	9+47	14' RT	42	30	8.8
RDB-TS-0093		R5-1a WRONG WAY	WHITE/RED	EX BL RAMP DB	9+48	53' LT	42	30	8.8
RDB-LP-0090 A		M3-4 WEST	WHITE/BLACK	EX BL RAMP DB	9+47	14' RT	36	18	4.5
RDB-LP-0090 B		M1-4 US 52	WHITE/BLACK	EX BL RAMP DB	9+47	14' RT	36	36	9.0
RDB-LP-0090 C		M3-1 NORTH	WHITE/BLACK	EX BL RAMP DB	9+47	14' RT	36	18	4.5
RDB-LP-0090 D		M1-5 IL 53	WHITE/BLACK	EX BL RAMP DB	9+47	14' RT	36	36	9.0
RDB-LP-0090 E		M5-1 L DIRECTIONAL ARROW	WHITE/BLACK	EX BL RAMP DB	9+47	14' RT	30	21	4.4
RDB-LP-0091A		M3-2 EAST	WHITE/BLACK	EX BL RAMP DB	9+47	14' RT	36	18	4.5
RDB-LP-0091B		M1-4 US 52	WHITE/BLACK	EX BL RAMP DB	9+47	14' RT	36	36	9.0
RDB-LP-0091C		M3-3 SOUTH	WHITE/BLACK	EX BL RAMP DB	9+47	14' RT	36	18	4.5
RDB-LP-0091D		M1-5 IL 53	WHITE/BLACK	EX BL RAMP DB	9+47	14' RT	36	36	9.0
RDB-LP-0091E		M5-1 R DIRECTIONAL ARROW	WHITE/BLACK	EX BL RAMP DB	9+47	14' RT	30	21	4.4
WB-WP-7022		EXIT 132, GORE SIGN	WHITE/GREEN	EX CL I-80	702+88	83.1LT	96	60	40.0
EB-TS-7090		W13-6 EXIT 25 MPH	BLACK/YELLOW	EX CL I-80	709+26	84.23 RT	48	84	28.0
EB-OS-7091	1S099I080R132.9	M1-1 EAST INDIANA	WHITE/GREEN	EX CL I-80	709+58	37.18 RT	-	-	-
EB-OS-7092	1S099I080R132.9	EXIT 133 RICHARDS ST / EXIT ONLY	WHITE/GREEN	EX CL I-80	709+58	49.83 RT	-	-	-
EB-OS-7093	1S099I080R132.9	M1-4 52 WEST, M1-I100A ILLINOIS 53 NORTH, M3-1 CHICAGO ST/ EXI	WHITE/GREEN	EX CL I-80	709+58	66.40 RT	-	-	-
EB-WP-7101		EXIT 132 B, GORE SIGN	WHITE/GREEN	EX CL I-80	710+69	79.47 RT	-	-	-
WB-WP-7110		ABRAHAM LINCOLN NATIONAL CEMETARY EXIT 132	WHITE/BROWN	EX CL I-80	711+52	84.23 LT	-	-	-
RBC-LP-0021C		M6-2 ARROW	WHITE/BLUE	EX BL RAMP BC	2+47	15.26 RT	30	21	4.4
RBC-LP-0030		R5-I100	BLACK/WHITE	EX BL RAMP BC	3+72	19' RT	48	60	20.0
RBC-TS-0040		W1-8R CHEVRON ALIGNMENT	BLACK/YELLOW	EX BL RAMP BC	4+42	25' LT	30	36	7.5

I-80 ROADWAY SIGNING TO REMAIN SCHEDULE

SIGN ID	STRUCTURE ID	LEGEND/DESCRIPTION	COLOR	ALIGNMENT/ DIRECTION	STATION	OFFSET	W (IN)	H (IN)	AREA (SQ FT)
RBC-TS-0050		W1-8R CHEVRON ALIGNMENT	BLACK/YELLOW	EX BL RAMP BC	5+14	25' LT	30	36	7.5
RBC-TS-0070		W1-8R CHEVRON ALIGNMENT	BLACK/YELLOW	EX BL RAMP BC	7+26	27' LT	30	36	7.5
RCA-TS-0040		W1-8R CHEVRON ALIGNMENT	BLACK/YELLOW	EX BL RAMP CA	4+59	27.18 LT	30	36	7.5
RCA-TS-0060		W1-8R CHEVRON ALIGNMENT	BLACK/YELLOW	EX BL RAMP CA	6+36	25.97 LT	30	36	7.5
RCA-TS-0070		W1-8R CHEVRON ALIGNMENT	BLACK/YELLOW	EX BL RAMP CA	7+65	25.63 LT	30	36	7.5
RCA-TS-0080		W1-8R CHEVRON ALIGNMENT	BLACK/YELLOW	EX BL RAMP CA	8+66	24.92 LT	30	36	7.5
RCB-TS-0110		W3-1 STOP AHEAD	BLACK/YELLOW	EX BL RAMP CB	11+42	13.23 RT	48	48	16.0
RCB-TS-0130		R1-1 STOP SIGN	WHITE/RED	EX BL RAMP CB	13+74	41' RT	36	36	9.0
RDB-LP-0100		ABRAHAM LINCOLN NATIONAL CEMETRY/RIGHT ARROW	WHITE/BROWN	EX BL RAMP DB	9+47	22' RT	-	-	-
RDB-LP-0101		CHICAGOLAND SPEEDWAY/RIGHT ARROW	WHITE/BROWN	EX BL RAMP DB	9+47	22' RT	-	-	-
EB-OS-7161		I-80 EAST\INDIANA	WHITE/GREEN	EX CL I-80	716+50	17' RT	-	-	-
EB-OS-7162		BRIGGS ST\ EXIT 1.5 MILES	WHITE/GREEN	EX CL I-80	716+50	36' RT	-	-	-
EB-OS-7163		RICHARD ST\ EXIT \ ARROW\ ONLY	WHITE/GREEN	EX CL I-80	716+50	56' RT	-	-	-
WB-GM-7170		EXIT 132\ US 52 \ ILLINOIS 53 \ CHICAGO ST \ 1/4 MILE	WHITE/GREEN	EX CL I-80	717+06	78' LT	-	-	-
WB-TS-7182		42-4A SPEED LIMIT 55 MINIMUM 45	BLACK/WHITE	EX CL I-80	717+08	78' LT	48	96	32.0
WB-WP-7270		AMTRAK\ EXIT 132 \ INTERMODAL CENTERS \ EXIT 127	WHITE / GREEN	EX CL I-80	727+34	70' LT	-	-	-
WB-GM-7320		CHICAGOLAND SPEEDWAY \ EXIT 132	WHITE/BROWN	EX CL I-80	732+49	73' LT	-	-	-
WB-GM-7340		US 52 \ ILLINOIS 53 \ CHICAGO ST \ 3/4 MILE	WHITE / GREEN	EX CL I-80	734+40	70' LT	-	-	-
WB-WP-7360		EXIT \133\ ARROW	WHITE / GREEN	EX CL I-80	736+88	72' LT	90	60	37.5
RAD-LP-0010		W13-3 RAMP 25 MPH	BLACK/YELLOW	EX BL RAMP AD	01+80	CL	36	48	12.0
EB-TS-7230		E5-1A EXIT 133	WHITE/GREEN	EX CL I-80	107+67	24'LT	90	60	37.5
RAD-TS-0020		R5-I100	BLACK/WHITE	EX BL RAMP CB	02+49	7'RT	48	60	20
WB-TS-7230A		W8-5	BLACK/YELLOW	EX CL I-80	723+30	84' LT	36	36	9
WB-TS-7230B		W8-10P	BLACK/YELLOW	EX CL I-80	723+30	84' LT	12	9	0.75

MODEL: Remaining Signing Schedules-I
FILE NAME: pw://transystems-pw.bentley.com:transyscorp-pw1-hosted/Documents/Projects_2018/C-4401/401180022/03-WSP/CAD/62R23-Rb-1/Sheets/Civil/D162R23-sht-schedule_Signing.dgn

Accurate GROUP, INC.

USER NAME = jpioquinto	DESIGNED - JP	REVISED -	
	DRAWN - JP	REVISED -	
PLOT SCALE = 100.000 ' / in.	CHECKED - AB	REVISED -	
PLOT DATE = 11/5/2025	DATE - 11/7/2025	REVISED -	

STATE OF ILLINOIS
DEPARTMENT OF TRANSPORTATION

REMAINING SIGNING SCHEDULE

SCALE: NONE | SHEET 4 OF 8 SHEETS | STA. TO STA.

F.A.I. RTE.	SECTION	COUNTY	TOTAL SHEETS	SHEET NO.
80	FAI 80 21 STRUCTURE 2	WILL	1230	430

CONTRACT NO. 62R23

ILLINOIS | FED. AID PROJECT

SIGNING TO REMAIN SCHEDULE

SIGN ID	STRUCTURE ID	LEGEND/DESCRIPTION	COLOR	ALIGNMENT/ DIRECTION	STATION	OFFSET	W (IN)	H (IN)	AREA (SQ FT)
NB-LP-0140A		M4-5 TO	WHITE/BLUE	EX CL CHICAGO ST	14+83	29' RT	24	12	2.0
NB-LP-0140B		M1-1 INTERSTATE 55	WHITE/BLUE	EX CL CHICAGO ST	14+83	29' RT	24	24	4.0
NB-LP-0140C		M5-6 RIGHT LANE	WHITE/BLUE	EX CL CHICAGO ST	14+83	29' RT	24	18	3.0
NB-LP-0141A		M3-2 EAST	WHITE/BLUE	EX CL CHICAGO ST	14+83	29' RT	24	12	2.0
NB-LP-0141B		M1-1 INTERSTATE 80	WHITE/BLUE	EX CL CHICAGO ST	14+83	29' RT	24	24	4.0
NB-LP-0141C		M5-4 LEFT LANE	WHITE/BLUE	EX CL CHICAGO ST	14+83	29' RT	24	18	3.0
NB-LP-0142 A		M3-4 WEST	WHITE/BLUE	EX CL CHICAGO ST	14+83	29' RT	24	12	2.0
NB-LP-0142 B		M1-1 INTERSTATE 80	WHITE/BLUE	EX CL CHICAGO ST	14+83	29' RT	24	24	4.0
NB-LP-0142 C		M5-6 RIGHT LANE	WHITE/BLUE	EX CL CHICAGO ST	14+83	29' RT	24	18	3.0
SB-LP-0231		W12-2 14'-0"	BLACK/YELLOW	EX CL CHICAGO ST	23+97	35' LT	36	36	9.0
SB-TS-0232		R9-3 NO PEDESTRIAN CROSSING	RED+BLACK/WHITE	EX CL CHICAGO ST	23+72	40' LT	18	18	2.3
SB-TS-0233		R9-3 NO PEDESTRIAN CROSSING	RED+BLACK/WHITE	EX CL CHICAGO ST	23+72	40' LT	18	18	2.3
SB-LP-0234		R3-8 LEFT ONLY/ RIGHT ONLY	BLACK/WHITE	EX CL CHICAGO ST	23+73	52' LT	30	30	6.3
NB-LP-0235		W1-7 DOUBLE ARROW	BLACK/YELLOW	EX CL CHICAGO ST	23+99	27' RT	48	24	8.0
SB-TS-0240A		R12-1 WEIGHT LIMIT 10 TONS	BLACK/WHITE	EX CL CHICAGO ST	24+39	64' LT	24	30	5.0
SB-TS-0240B		LOCAL DELIVERY ONLY	BLACK/WHITE	EX CL CHICAGO ST	24+39	64' LT	18	24	3.0
NB-WP-0241A		M4-5 TO	WHITE/BLUE	EX CL CHICAGO ST	24+44	35' RT	24	12	2.0
NB-WP-0241B		M1-1 INTERSTATE 55	WHITE/BLUE	EX CL CHICAGO ST	24+44	35' RT	24	24	4.0
NB-WP-0241C		M6-3 ARROW	WHITE/BLUE	EX CL CHICAGO ST	24+44	35' RT	21	15	2.2
NB-WP-0242A		M3-2 EAST	WHITE/BLUE	EX CL CHICAGO ST	24+44	35' RT	24	12	2.0
NB-WP-0242B		M1-1 INTERSTATE 80	WHITE/BLUE	EX CL CHICAGO ST	24+44	35' RT	24	24	4.0
NB-WP-0242C		M5-1 ARROW	WHITE/BLUE	EX CL CHICAGO ST	24+44	35' RT	21	15	2.2
NB-WP-0243 A		M3-4 WEST	WHITE/BLUE	EX CL CHICAGO ST	24+95	38' RT	24	12	2.0
NB-WP-0243 B		M1-1 INTERSTATE 80	WHITE/BLUE	EX CL CHICAGO ST	24+95	38' RT	24	24	4.0
NB-WP-0243 C		M6-3 ARROW	WHITE/BLUE	EX CL CHICAGO ST	24+95	38' RT	24	15	2.5
SB-LP-0250A		W12-2 12'-0"	BLACK/YELLOW	EX CL CHICAGO ST	25+03	40' LT	36	36	9.0
NB-BM-0332		W12-2a 14 FT 0 IN	BLACK/YELLOW	EX CL CHICAGO ST	33+47	20' RT	78	24	13.0
NB-BM-0333		I-80 WEST \ MOLINE - \ ROCK ISLAND	WHITE/GREEN	EX CL CHICAGO ST	33+46	34' RT	186	126	162.8
SB-BM-0350		W12-2a 14 FT 2 IN	BLACK/YELLOW	EX CL CHICAGO ST	35+07	15' LT	78	24	13.0
SB-BM-0351		I-80 EAST \ GARY INDIANA	WHITE/GREEN	EX CL CHICAGO ST	35+08	26' LT	-	-	-
NB-LP-0382		D3-1 US 52 / ILLINOIS 53 \ CHICAGO ST	WHITE/GREEN	EX CL CHICAGO ST	38+46	46' RT	-	-	-
NB-LP-0383		W1-7 DOUBLE ARROW	BLACK/YELLOW	EX CL CHICAGO ST	38+64	50' RT	48	24	8.0
SB-TS-0384		R5-1 DO NOT ENTER	WHITE/RED	EX CL CHICAGO ST	38+82	41' LT	36	36	9.0
SB-TS-0385		R6-1 ONE WAY ARROW	BLACK/WHITE	EX CL CHICAGO ST	38+82	41' LT	36	12	3.0
SB-TS-0386		R6-1 ONE WAY ARROW	BLACK/WHITE	EX CL CHICAGO ST	38+82	41' LT	36	12	3.0
NB-LP-0430A		M3-4 WEST	BLACK/WHITE	EX CL CHICAGO ST	43+27	49' RT	24	12	2.0
NB-LP-0430B		M1-4 US 52	BLACK/WHITE	EX CL CHICAGO ST	43+27	49' RT	24	24	4.0
NB-LP-0431A		M3-1 NORTH	BLACK/WHITE	EX CL CHICAGO ST	43+27	49' RT	24	12	2.0
NB-LP-0431B		M1-I100 ILLINOIS 53	BLACK/WHITE	EX CL CHICAGO ST	43+27	49' RT	24	24	4.0
SB-GM-0432		I-80 EAST \ GARY INDIANA \ I-80 WEST \ MOLINE - \ ROCK ISLAN	WHITE/GREEN	EX CL CHICAGO ST	43+39	57' LT	-	-	-
NB-GM-0290		M1-1 INTERSTATE 80 WEST/ MOLINE/ ROCK ISLAND, NEXT RIGHT	WHITE/GREEN	EX CL CHICAGO ST	29+28	51' RT	-	-	-
NB-LP-0291A		M4-5 TO	WHITE/BLUE	EX CL CHICAGO ST	29+46	43' RT	24	12	2.0
NB-LP-0291B		M1-1 INTERSTATE 55	WHITE/BLUE	EX CL CHICAGO ST	29+46	43' RT	24	24	4.0
NB-LP-0291C		M5-2R NEXT RIGHT	WHITE/BLUE	EX CL CHICAGO ST	29+46	43' RT	24	18	3.0
SB-LP-0300		W13-7 RAMP 25 MPH	BLACK/YELLOW	EX CL CHICAGO ST	30+15	67' LT	36	48	12.0

SIGNING TO REMAIN SCHEDULE

SIGN ID	STRUCTURE ID	LEGEND/DESCRIPTION	COLOR	ALIGNMENT/ DIRECTION	STATION	OFFSET	W (IN)	H (IN)	AREA (SQ FT)
NB-TS-0301		W4-1 MERGE	BLACK/YELLOW	EX CL CHICAGO ST	30+58	39' RT	48	48	16.0
SB-WP-0302		W3-3 SIGNAL WARNING	BLACK/YELLOW	EX CL CHICAGO ST	30+62	42' LT	30	30	6.3
SB-TS-0310A		M3-2 EAST	WHITE/BLUE	EX CL CHICAGO ST	31+40	44' LT	24	12	2.0
SB-TS-0310B		M1-1 INTERSTATE 80	WHITE/BLUE	EX CL CHICAGO ST	31+40	44' LT	24	24	4.0
SB-TS-0310C		M6-2 ARROW	WHITE/BLUE	EX CL CHICAGO ST	31+40	44' LT	21	15	2.2
NB-TS-0331A		M4-5 TO	WHITE/BLUE	EX CL CHICAGO ST	33+25	59' RT	36	18	4.5
NB-TS-0331B		M1-1 INTERSTATE 55	WHITE/BLUE	EX CL CHICAGO ST	33+25	59' RT	36	36	9.0
NB-TS-0331C		M5-2R ARROW	WHITE/BLUE	EX CL CHICAGO ST	33+25	59' RT	36	24	6.0
SB-LP-0370 A		M3-2 EAST	WHITE/BLUE	EX CL CHICAGO ST	37+14	40' LT	24	12	2.0
SB-LP-0370 B		M1-1 INTERSTATE 80	WHITE/BLUE	EX CL CHICAGO ST	37+14	40' LT	24	24	4.0
SB-LP-0370 C		M5-1 DIRECTIONAL ARROW	WHITE/BLUE	EX CL CHICAGO ST	37+14	40' LT	24	18	3.0
SB-TS-0380		R3-2 NO LEFT TURN	RED+BLACK/WHITE	EX CL CHICAGO ST	38+39	39' LT	24	24	4.0
SB-TS-0381		R3-1 NO RIGHT TURN	RED+BLACK/WHITE	EX CL CHICAGO ST	38+39	39' LT	24	24	4.0
SB-TS-0387		R3-2 NO LEFT TURN	RED+BLACK/WHITE	EX CL CHICAGO ST	38+92	42' LT	24	24	4.0
SB-TS-0388		R3-1 NO RIGHT TURN	RED+BLACK/WHITE	EX CL CHICAGO ST	38+92	42' LT	24	24	4.0
NB-LP-0150		W3-3 TRAFFIC SIGNAL	BLACK/YELLOW	EX CL CHICAGO ST	15+73	29' LT	30	30	6.3
NB-LP-0151		W16-2AP 900 FT	BLACK/YELLOW	EX CL CHICAGO ST	15+73	29' LT	24	12	2.0
SB-WP-0230		ARROW \ ABRAHAM LICOLN NATIONAL CEMETERY	WHITE\ BROWN	EX CL CHICAGO ST	23+02	35' LT	-	-	-
SB-LP-0234		R3-8 LEFT ONLY/ RIGHT ONLY	BLACK/WHITE	EX CL CHICAGO ST	23+73	51' LT	42	30	8.8
NB-LP-0235		W1-7 DOUBLE ARROW	BLACK/YELLOW	EX CL CHICAGO ST	23+99	27' RT	48	24	8.0
SB-LP-0250 A		W12-2 12 FEET CLEARANCE	BLACK/YELLOW	EX CL CHICAGO ST	25+03	40' LT	36	36	9.0
SB-LP-0250 B		M6-1 AUXILLARY RIGHT ARROW	BLACK/YELLOW	EX CL CHICAGO ST	25+03	40' LT	21	15	2.2
US6-NB-LP-2140		R2-1 SPEED LIMIT 40	BACK/WHITE	US6 NB	214+91	33' RT	24	30	5.0
SLB-EB-TS-7011		R1-1 STOP	WHITE/RED	SHELBY EB	701+57	36' RT	30	30	6.3
SLB-WB-TS-7013		R7-1 NO PARKING ANY TIME	WHITE/RED	SHELBY WB	701+69	31' RT	24	30	5.0
SLB-WB-TS-7012		R1-1 STOP	WHITE/RED	SHELBY WB	701+69	31' LT	30	30	6.3
SLB-WB-TS-7020		D3-1 JOLIET ST	WHITE/GREEN	JOLIET ST SB	701+77	24' RT	-	-	-
SLB-WB-TS-7021		D3-1 SHELBY ST	WHITE/GREEN	SHELBY ST WB	701+77	24' RT	-	-	-
RVR-NB-LP-1001		D3-1 RIVER ST	WHITE/GREEN	RIVER NB	100+23	22' RT	-	-	-
RVR-NB-LP-1002		D3-1 DAVIS ST	WHITE/GREEN	RIVER NB	100+23	22' RT	-	-	-
WTR-SB-TS-2980		D3-1 WATER ST	WHITE/GREEN	WATER ST NB	298+57	16' LT	-	-	-
WTR-SB-TS-2981		D3-1 DAVIS ST	WHITE/GREEN	WATER ST NB	298+57	16' LT	-	-	-
WTR-SB-TS-2982		R1-1	WHITE/RED	WATER ST NB	298+57	16' LT	-	-	-
JLT-SB-TS-7010		W14-1	BLACK/YELLOW	JOLIET ST SB	701+37	24' RT	30	30	6.3
NB-LP-0130		R2-1	BLACK/WHITE	EX CL CHICAGO ST	1393	38' RT	30	36	7.5
SB-TS-0310A		M3-2	WHITE/BLUE	EX CL CHICAGO ST	31+40	43' LT	24	12	2.0
SB-TS-0310B		M1-1	WHITE/BLUE	EX CL CHICAGO ST	31+40	43' LT	24	24	4.0
SB-TS-0310C		M6-2	WHITE/BLUE	EX CL CHICAGO ST	31+40	43' LT	21	15	2.2
SB-TS-0280A		M3-2	BLACK/WHITE	EX CL CHICAGO ST	28+01	41' LT	24	12	2.0
SB-TS-0280B		M1-4	BLACK/WHITE	EX CL CHICAGO ST	28+01	41' LT	24	24	4.0
SB-TS-0281A		M3-3	BLACK/WHITE	EX CL CHICAGO ST	28+01	41' LT	24	12	2.0
SB-TS-0281B		M1-I100	BLACK/WHITE	EX CL CHICAGO ST	28+01	41' LT	24	24	4.0
US6-NB-TS-2260A		JCT	BLACK/WHITE	US RTE 6 NB	226+87	33' RT	30	21	4.4
US6-NB-TS-2260B		M1-4 US 52	BLACK/WHITE	US RTE 6 NB	226+87	33' RT	36	36	9.0
US6-NB-TS-2260C		D3-1	BLACK/WHITE	US RTE 6 NB	226+87	33' RT	36	12	3.0

I-80 ROADWAY PROPOSED SIGNING SCHEDULE											SIGN PANEL T1	SIGN PANEL T2	SIGN PANEL T3	MILE POST MKR ASSEMBLY	WOOD SIGN SUPPORT		
SIGN ID	STRUCTURE ID	LEGEND/DESCRIPTION	COLOR	MOUNTING TYPE	ALIGNMENT/ DIRECTION	STATION	OFFSET	W (IN)	H (IN)	AREA (SQ FT)	(SQ FT)	(SQ FT)	(SQ FT)	(EACH)	P1 (FT)	P2 (FT)	PAY LENGTH (FT)
EB-LP-0390A		R2-I109 TRUCK OVER 4 TONS	BLACK/WHITE	LIGHT POLE	PR I-80 EB	39+51	82' RT	48	30	10.0		10					
EB-LP-0390B		R2-1 SPEED LIMIT 60	BLACK/WHITE	LIGHT POLE	PR I-80 EB	39+51	82' RT	48	60	20.0		20					
WB-LP-0400		W13-3 EXIT 40 MPH	BLACK/YELLOW	LIGHT POLE	PR I-80 WB	40+13	82' LT	48	60	20.0		20					
EB-OS-0410	1S099I080R132.3	I-80 EAST \ INDIANA	WHITE/GREEN	OVERHEAD SPAN	PR I-80 EB	41+68	33' RT	132	96	88.0			88				
EB-OS-0411	1S099I080R132.3	EXIT 132 \ US RTE 52 IL RTE 53 \ CHICAGO ST \ E11-1 EXIT ONLY	WHITE/GREEN	OVERHEAD SPAN	PR I-80 EB	41+68	63' RT	174	156	188.5			188.5				
WB-OS-0420	1S099I080L132.3	I-80 WEST \ IOWA	WHITE/GREEN	OVERHEAD SPAN	PR I-80 WB	42+01	33' LT	132	96	88.0			88				
WB-OS-0421	1S099I080L132.3	EXIT 130 \ IL RTE 7 \ LARKIN AVE \ 1 1/2 MILES	WHITE/GREEN	OVERHEAD SPAN	PR I-80 WB	42+01	47' LT	174	150	181.3			181.3				
WB-OS-0422	1S099I080L132.3	EXIT 131\ CENTER ST \ MEADOW AVE \ E11-1d EXIT ONLY	WHITE/GREEN	OVERHEAD SPAN	PR I-80 WB	42+01	68' LT	186	138	178.3			178.3				
EB-LP-0440 A		M3-2	WHITE/BLUE	LIGHT POLE	PR I-80 EB	44+53	82' RT	36	18	4.5	4.5						
EB-LP-0440 B		M1-1	WHITE/BLUE	LIGHT POLE	PR I-80 EB	44+53	82' RT	36	36	9.0	9						
EB-LP-0470		R3-8 ADVANCE LANE CONTROL	BLACK/WHITE	LIGHT POLE	PR I-80 EB	47+02	82' RT	36	36	9.0	9						
WB-LP-0471A		R2-I109 TRUCK OVER 4 TONS	BLACK/WHITE	LIGHT POLE	PR I-80 WB	47+62	82' LT	48	30	10.0		10					
WB-LP-0471B		R2-1 SPEED LIMIT 60	BLACK/WHITE	LIGHT POLE	PR I-80 WB	47+62	82' LT	48	60	20.0		20					
WB-LP-0500A		R2-1 SPEED LIMIT 65	BLACK/WHITE	LIGHTPOLE	PR I-80 WB	50+14	82' LT	48	60	20.0		20					
WB-LP-0500B		R2-I102 MINIMUM SPEED 45	BLACK/WHITE	LIGHTPOLE	PR I-80 WB	50+14	82' LT	48	36	12.0		12					
EB-LP-0520		R2-8 ADVANCE LANE CONTROL	BLACK/WHITE	LIGHT POLE	PR I-80 EB	52+00	82' RT	36	36	9.0	9						
WB-OC-0520	1C099I080L132.5	EXIT 131\ CENTER ST \ MEADOW AVE \ E11-1 EXIT ONLY	WHITE/GREEN	OVERHEAD CANTILEVER	PR I-80 WB	52+10	64' LT	186	138	178.3			178.3				
WB-MP-0540		MILE MARKER 132.5	WHITE/GREEN	MILE POST	PR I-80 WB	54+08	82' LT	12	60	5.0				1			
EB-MP-0541		MILE MARKER 132.5	WHITE/GREEN	MILE POST	PR I-80 EB	54+08	82' RT	12	60	5.0				1			
WB-LP-0550A		M3-4 WEST	WHITE/BLUE	LIGHT POLE	PR I-80 WB	55+12	83' LT	36	18	4.5	4.5						
WB-LP-0550B		M1-1 INTERSTATE 80	WHITE/BLUE	LIGHT POLE	PR I-80 WB	55+12	83' LT	36	36	9.0	9						
EB-OS-0560	1S099I080R132.6	EXIT 133 \ RICHARDS ST \ 1/2 MILE	WHITE/GREEN	OVERHEAD SPAN	PR I-80 WB	56+82	39' RT	180	102	127.5			127.5				
EB-OS-0561	1S099I080R132.6	EXIT 132 \ US RTE 52 IL RTE 53 \ CHICAGO ST \ E11-1e EXIT ONLY	WHITE/GREEN	OVERHEAD SPAN	PR I-80 EB	56+82	69' RT	222	162	249.8			249.8				
WB-WP-0590		D3-1 DES PLAINES RIVER	WHITE/GREEN	WOOD POST	PR I-80 WB	59+95	125' LT	78	36	19.5		19.5			14	20	34
WB-WP-7251		W4-1 MERGE SIGN	BLACK/YELLOW	WOOD POST	PR CL I-80 WB	725+54	68' LT	48	48	16.0		16			5	11	14
										TOTAL	45	148	1280	2			48

MODEL: Proposed Signing Schedules-I
FILE NAME: pw://transystems-pw.bentley.com:transyscorp-pw1-hosted/Documents/Projects_2018/CH401/401180022/03-WSP/CAD/62R23-RB-1/Sheets/Civil/D162R23-sht-schedule_Signing.dgn

Accurate GROUP, INC.

USER NAME = jploquinto	DESIGNED - JLS	REVISED -	
	DRAWN - JLS	REVISED -	
PLOT SCALE = 100.000 ' / in.	CHECKED - AB	REVISED -	
PLOT DATE = 11/6/2025	DATE - 11/7/2025	REVISED -	

STATE OF ILLINOIS
DEPARTMENT OF TRANSPORTATION

PROPOSED SIGNING SCHEDULE
I-80

SCALE: NONE | SHEET 6 OF 8 SHEETS | STA. | TO STA.

F.A.I. RTE.	SECTION	COUNTY	TOTAL SHEETS	SHEET NO.
80	FAI 80 21 STRUCTURE 2	WILL	1230	432
		CONTRACT NO. 62R23		
	ILLINOIS	FED. AID PROJECT		

LOCAL ROADS PROPOSED SIGNING SCHEDULE										SIGN PANEL T1	TELESCOPING STL SIGN SUPPORT		
SIGN ID	LEGEND/DESCRIPTION	COLOR	MOUNTING TYPE	ALIGNMENT/ DIRECTION	STATION	OFFSET	W (IN)	H (IN)	AREA (SQ FT)	(SQ FT)	P1 (FT)	P2 (FT)	PAY LENGTH (FT)
RVR-NB-TS-1001A	W11-2 PEDESTRIAN CROSSING	BLACK/YELLOW	TELESCOPING STEEL	RIVER ST NB	100+63	22' RT	30	30	6.3	6.3	4	10.5	14.5
RVR-NB-TS-1001B	W16-7P AUXILLARY ARROW	BLACK/YELLOW					24	12	2	2			
RVR-SB-TS-1002A	W11-2 PEDESTRIAN CROSSING	BLACK/YELLOW	TELESCOPING STEEL	RIVER ST SB	100+65	19' LT	30	30	6.3	6.3	4	10.5	14.5
RVR-SB-TS-1002B	W16-7P AUXILLARY ARROW	BLACK/YELLOW					24	12	2	2			
RVR-NB-TS-1003	R1-1 STOP	WHITE/RED	TELESCOPING STEEL	RIVER ST NB	100+98	29' RT	30	30	6.3	6.3	4	9.5	13.5
RVR-NB-TS-1070	W1-2R CURVE RIGHT	BLACK/YELLOW	TELESCOPING STEEL	RIVER ST NB	107+50	19' RT	30	30	6.3	6.3	4	9.5	13.5
RVR-SB-TS-1100	W1-6 ONE-DIRECTION LARGE ARROW	BLACK/YELLOW	TELESCOPING STEEL	RIVER ST SB	110+25	30' LT	48	24	8	8	4	9	13
RVR-SB-TS-1120A	W1-2	BLACK/YELLOW	TELESCOPING STEEL	RIVER ST SB	112+00	19'RT	36	36	9	9	4	10	14
RVR-SB-TS-1120B	W13-1P	BLACK/YELLOW	TELESCOPING STEEL	RIVER ST SB	112+00	19'RT	18	18	2	2	4	9	13
JLT-NB-TS-6000	W14-1 DEAD END	BLACK/YELLOW	TELESCOPING STEEL	SOUTH JOLIET ST NB	600+13	19' RT	30	30	6.3	6.3	4	9.5	13.5
CHR-SB-TS-5001	R1-1 STOP	WHITE/RED	TELESCOPING STEEL	CHERRY ST SB	500+31	25' LT	30	30	6.3	6.3	4	9.5	13.5
CHR-SB-TS-5012A	W10-I100 CAUTION \ 40 FEET BETWEEN TRACKS & HIGHWAY	BLACK/WHITE	TELESCOPING STEEL	CHERRY ST SB	501+25	16' LT	30	36	7.5	7.5	4	12.5	16.5
CHR-SB-TS-5012B	R8-8 DO NOT STOP ON TRACKS	BLACK/WHITE					24	30	5	5			
CHR-SB-TS-5042	D3-1 CHERRY ST	WHITE/GREEN	TELESCOPING STEEL	CHERRY ST SB	504+33	17' LT	24	12	2.0	2.0	4	9.0	13.0
CHR-SB-TS-5043	D3-1 JASPER ST	WHITE/GREEN	TELESCOPING STEEL	CHERRY ST SB	504+33	17' LT	24	12	2.0	2.0	4	9.0	13.0
CHR-SB-TS-5044	R1-1 STOP	WHITE/RED	TELESCOPING STEEL	CHERRY ST SB	504+42	30' LT	30	30	6.3	6.3	4	9.5	13.5
US6-NB-TS-2321A	R1-1 STOP	WHITE/RED	TELESCOPING STEEL	US RTE 6 NB	232+45	23' RT	36	36	9	9	4	11.0	15.0
US6-NB-TS-2321B	W4-4P	BLACK/YELLOW					24	12	2.0	2.0			
WTR-SB-TS-3011	R7-1 NO PARKING ANY TIME	RED/WHITE	TELESCOPING STEEL	WATER ST SB	301+77	10' LT	12	18	1.5	1.5	4	8.5	12.5
WTR-SB-TS-3049	R7-1 NO PARKING ANY TIME	RED/WHITE	TELESCOPING STEEL	WATER ST SB	304+18	10' LT	12	18	1.5	1.5	4	8.5	12.5
WTR-SB-TS-3052	W1-8 CHEVRON ALIGNMENT	BLACK/YELLOW	TELESCOPING STEEL	WATER ST SB	305+05	18' LT	18	24	3	3	4	9	13
WTR-SB-TS-3053	W5-1	BLACK/YELLOW	TELESCOPING STEEL	WATER ST SB	305+46	18' LT	36	36	9	9	4	10	14
WTR-NB-TS-3054	R2-1 SPEED LIMIT 25	BLACK/WHITE	TELESCOPING STEEL	WATER ST NB	305+57	17' RT	24	30	5	5	4	9.5	13.5
WTR-SB-TS-3053	R7-1 NO PARKING ANY TIME	RED/WHITE	TELESCOPING STEEL	WATER ST SB	305+90	18' LT	12	18	1.5	1.5	4	8.5	12.5
WTR-SB-TS-3073	R7-1 NO PARKING ANY TIME	RED/WHITE	TELESCOPING STEEL	WATER ST SB	307+37	18' LT	12	18	1.5	1.5	4	8.5	12.5
WTR-SB-TS-3074A	W11-2 PEDESTRIAN CROSSING	BLACK/YELLOW	TELESCOPING STEEL	WATER ST SB	307+76	18' LT	30	30	6.3	6.3	4	11.5	15.5
WTR-SB-TS-3074B	W16-7P AUXILLARY ARROW	BLACK/YELLOW					24	12	2	2			
WTR-NB-TS-3075A	W11-2 PEDESTRIAN CROSSING	BLACK/YELLOW	TELESCOPING STEEL	WATER ST NB	307+76	19' RT	30	30	6.3	6.3	4	11.5	15.5
WTR-NB-TS-3075B	W16-7P AUXILLARY ARROW	BLACK/YELLOW					24	12	2	2			
RVR-EB-TS-3076A	R1-1 STOP	WHITE/RED	TELESCOPING STEEL	WATER ST SB	307+93	34' LT	30	30	6.3	6.3	4	10.5	14.5
WTR-SB-TS-3076B	W4-4 CROSS TRAFFIC DOES NOT STOP	BLACK/YELLOW					24	12	2	2			
RVR-WB-TS-3081	D3-1 RIVER ST	WHITE/GREEN	TELESCOPING STEEL	WATER ST SB	307+76	18' LT	30	12	2.5	2.5	4	8.0	12.0
LCS-WB-TS-4000	R1-1 STOP	WHITE/RED	TELESCOPING STEEL	PR LUCAS ST WB	400+44	19' LT	30	30	6.3	6.3	4	9.5	13.5
LCS-NB-TS-4030	W1-1 L	BLACK/YELLOW	TELESCOPING STEEL	PR LUCAS ST NB	403+27	19' RT	30	30	6	6	4	10	14
LCS-NB-TS-4031	W1-8 CHEVRON ALIGNMENT	BLACK/YELLOW	TELESCOPING STEEL	PR LUCAS ST NB	403+49	19' RT	18	24	3	3	4	9	13
LCS-NB-TS-4032	W1-8 CHEVRON ALIGNMENT	BLACK/YELLOW	TELESCOPING STEEL	PR LUCAS ST WB	403+53	18' RT	18	24	3	3	4	9	13

MODEL: Proposed Signing Schedules-II
FILE NAME: pw://transystems-pw.bentley.com:transyscorp-pw1-hosted/Documents/Projects_2018/CH401/401180022/03-WSP/CAD/62R23-RB-1/Sheets/Civil/D162R23-sht-schedule_Signing.dgn

Accurate GROUP, INC.

USER NAME = jpioquinto	DESIGNED - JLS	REVISED -	
	DRAWN - JLS	REVISED -	
PLOT SCALE = 100.000 ' / in.	CHECKED - AB	REVISED -	
PLOT DATE = 11/5/2025	DATE - 11/7/2025	REVISED -	

STATE OF ILLINOIS
DEPARTMENT OF TRANSPORTATION

PROPOSED SIGNING SCHEDULE
LOCAL ROADS

SCALE: NONE | SHEET 7 OF 8 SHEETS | STA. | TO STA.

F.A.I. RTE.	SECTION	COUNTY	TOTAL SHEETS	SHEET NO.
80	FAI 80 21 STRUCTURE 2	WILL	1230	433
		CONTRACT NO. 62R23		
	ILLINOIS	FED. AID PROJECT		

LOCAL ROADS PROPOSED SIGNING SCHEDULE										SIGN PANEL T1	TELESCOPING STL SIGN SUPPORT		
SIGN ID	LEGEND/DESCRIPTION	COLOR	MOUNTING TYPE	ALIGNMENT/ DIRECTION	STATION	OFFSET	W (IN)	H (IN)	AREA (SQ FT)	(SQ FT)	P1 (FT)	P2 (FT)	PAY LENGTH (FT)
LCS-NB-TS-4034	W1-8 CHEVRON ALIGNMENT	BLACK/YELLOW	TELESCOPING STEEL	PR LUCAS ST NB	403+71	18' RT	18	24	3	3	4	9	13
LCS-NB-TS-4035	W1-8 CHEVRON ALIGNMENT	BLACK/YELLOW	TELESCOPING STEEL	PR LUCAS ST NB	403+75	19' RT	18	24	3	3	4	9	13
LCS-SB-TS-4033	W1-1 R	BLACK/YELLOW	TELESCOPING STEEL	PR LUCAS ST NB	403+97	19' LT	30	30	6	6	4	10	14
US6-NB-TS-2192	W10-3L	BLACK/YELLOW	TELESCOPING STEEL	US RTE 6 NB	219+72	27'RT	36	36	9	9	4	10	14
US6-SB-TS-2151	R2-1	BLACK/WHITE	TELESCOPING STEEL	US RTE 6 SB	215+80	32'LT	24	30	5	5	4	10	14
US6-NB-TS-2161	W11-10	BLACK/YELLOW	TELESCOPING STEEL	US RTE 6 SB	216+30	29'RT	36	36	9	9	4	10	14
									TOTAL	199			476

MODEL: Proposed Signing Schedules-III
FILE NAME: pw://transystems-pw.bentley.com:transyscorp-pw1-hosted/Documents/Projects_2018/CH401/401180022/03-WSP/CAD/62R23-RB-1/Sheets/Civil/0162R23-sht-schedule_Signing.dgn

Accurate GROUP, INC.

USER NAME = jpioquinto	DESIGNED - JLS	REVISED -	
	DRAWN - JLS	REVISED -	
PLOT SCALE = 100.000 ' / in.	CHECKED - AB	REVISED -	
PLOT DATE = 11/5/2025	DATE - 11/7/2025	REVISED -	

STATE OF ILLINOIS
DEPARTMENT OF TRANSPORTATION

PROPOSED SIGNING SCHEDULE
LOCAL ROADS

SCALE: NONE | SHEET 8 OF 8 SHEETS | STA. TO STA.

F.A.I. RTE.	SECTION	COUNTY	TOTAL SHEETS	SHEET NO.
80	FAI 80 21 STRUCTURE 2	WILL	1230	434
		CONTRACT NO. 62R23		
	ILLINOIS	FED. AID PROJECT		

PR EB-LP-0390(A-B) # TRUCKS OVER 4 TONS R2-I109 48X30 B/W; SPEED LIMIT 60 R2-1 48X60 B/W

PR WB-LP-0400 RAMP 40 M.P.H. W13-3 48X60 B/Y

PR EB-OS-0410 EAST 80 Indiana 132X96 W/G

PR EB-OS-0411 EXIT 132 52 53 Chicago St EXIT ONLY 174X156 W/G

PR WB-OS-0420 WEST 80 Iowa 132X96 W/G

PR WB-OS-0421 EXIT 130 7 Larkin Ave 1½ MILES 174X150 W/G

PR WB-OS-0422 EXIT 131 Center St Meadow Ave EXIT ONLY 186X138 W/G

PR # EB-LP-0470 ONLY R3-8 36X36 B/W

PR # WB-LP-0471(A-B) TRUCKS OVER 4 TONS R2-I109 48X30 B/W; SPEED LIMIT 60 R2-1 48X60 B/W

PR EB-LP-0440(A-B) EAST M3-2 36X18 W/BL; INTERSTATE 80 M1-1 36X36 W/BL

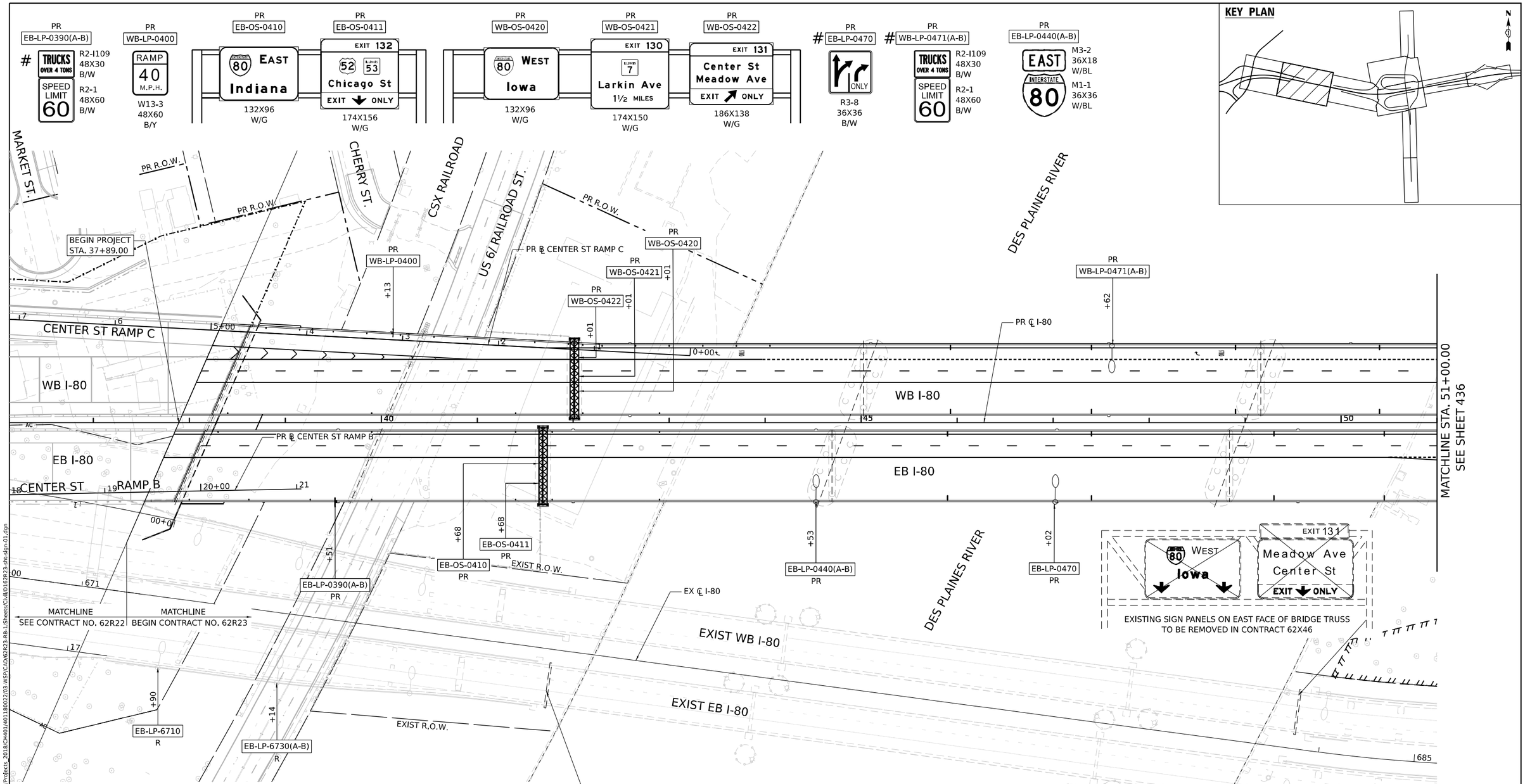

R EB-LP-6710 W4-2 48X48 B/Y

R EB-LP-6730(A-B) SPEED LIMIT 55 R2-1 48X60 B/W; MINIMUM 45 R2-I102 48X36 B/W

COVER SIGN PANELS UNTIL FINAL PAVEMENT MARKINGS ARE LAID FOR ULTIMATE CONDITION

SIGNING LEGEND

R	REMOVE SIGN PANEL AND SUPPORT (NO REPLACEMENT)
PR	NEW SIGN PANEL AND SUPPORT(S)
REM	EXISTING SIGN TO REMAIN
⊠	TEMPORARY PAVEMENT TO REMAIN

MODEL: Default
FILE NAME: pw://transystems-pw.bentley.com:transyscorp-pw1-hosted/Documents/Projects_2018/CH401/401180022/03-WSP/CAD/62R23-rtb-1/Sheets/GMD16R23-sht-sdn-01.dgn

Accurate GROUP, INC.

USER NAME = jpioquinto	DESIGNED - JLS	REVISED -	
	DRAWN - JLS	REVISED -	
PLOT SCALE = 100.000 ' / in.	CHECKED - AB	REVISED -	
PLOT DATE = 11/5/2025	DATE - 11/7/2025	REVISED -	

STATE OF ILLINOIS
DEPARTMENT OF TRANSPORTATION

EXISTING AND PROPOSED SIGNING PLAN
I-80

SCALE: 1" = 50' | SHEET 1 OF 6 SHEETS | STA. 37+89 TO STA. 50+00

F.A.I. RTE.	SECTION	COUNTY	TOTAL SHEETS	SHEET NO.
80	FAI 80 21 STRUCTURE 2	WILL	1230	435

CONTRACT NO. 62R23
ILLINOIS | FED. AID PROJECT

PR WB-OC-0520
EXIT 131
Center St
Meadow Ave
EXIT ONLY
186X138
W/G

PR WB-MP-0540
PR EB-MP-0541
I-325
12X60
W/G

PR WB-LP-0550(A-B)
WEST
INTERSTATE 80
M3-4 36X18 W/BL
M1-1 36X36 W/BL

PR EB-OS-0560
EXIT 133
Richards St
½ MILE
180X102
W/G

PR EB-OS-0561
EXIT 132
52 53 ILLINOIS
Chicago St
EXIT ONLY
222X162
W/G

(COVER WITH BLANK)

PR WB-WP-0590
Des Plaines River
D3-1
78X36
W/G

R EB-LP-6960(A-C)
SOUTH
ILLINOIS 53
M3-2 36X18 B/W
M1-I100 36X36 B/W
M6-2 30X21 B/W

R WB-LP-6980
W4-1
48X48
B/Y

SIGNING LEGEND

R	REMOVE SIGN PANEL AND SUPPORT (NO REPLACEMENT)
PR	NEW SIGN PANEL AND SUPPORT(S)
REM	EXISTING SIGN TO REMAIN
	TEMPORARY PAVEMENT TO REMAIN

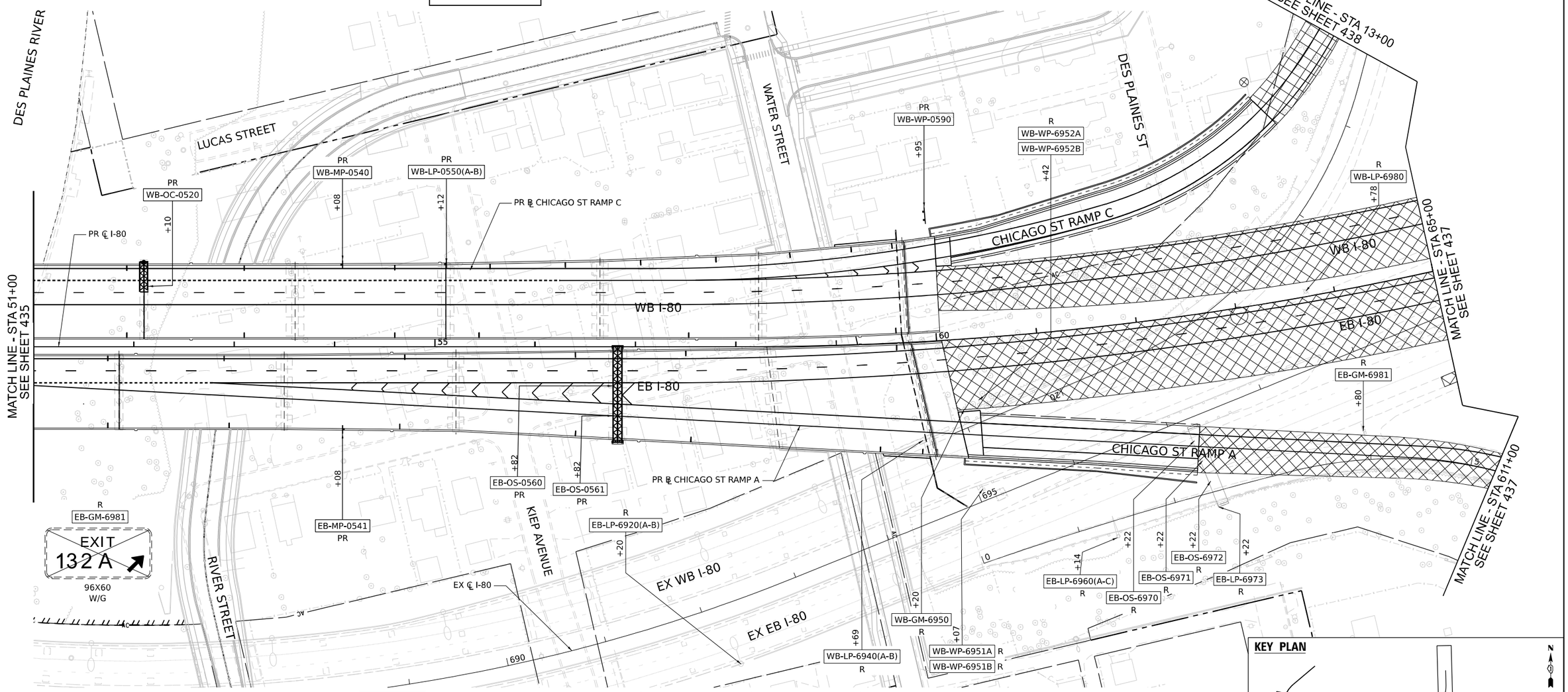

R EB-LP-6920(A-B)
EAST
INTERSTATE 80
M3-2 36X18 W/BL
M1-1 36X36 W/BL

R WB-LP-6940(A-B)
SPEED LIMIT 55
MINIMUM 45
R2-1 48X60 B/W
R2-I102 48X36 B/W

R WB-GM-6950
Des Plaines River
72X30
W/G

WB-WP-6951A R
WB-WP-6951B R
WB-WP-6952A R
WB-WP-6952B R
* REMOVE FLASHING BEACONS AND ELECTRICAL COMPONENTS
*
W8-5 48X48 B/Y
W13-1P 30X30 B/Y
45 M.P.H.

R EB-OS-6970
EXIT 133
Richards St
½ MILE
180X102
W/G

R EB-OS-6971
EXIT 132 B
52 WEST
53 NORTH
Chicago St
1/4 MILE
174X168
W/G

R EB-OS-6972
EXIT 132 A
52 EAST
53 SOUTH
Chicago St
186X168
W/G

R EB-LP-6973
EXIT
40
MPH
W13-2 36X48 B/Y

N

0 50 100 150
SCALE IN FEET

KEY PLAN

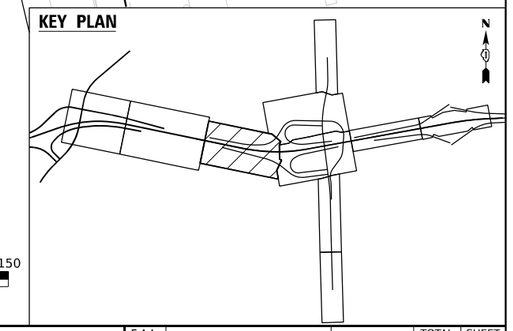

MODEL: Default
FILE NAME: pw://transystems-pw.bentley.com:transyscorp-pw1-hosted/Documents/Projects_2018/CH401/401180022/03-WSP/CAD/62R23-RB-1/Sheets/Civil/0162R23-sht-sign-02.dgn

Accurate GROUP, INC.

USER NAME = jpioquinto	DESIGNED - JLS	REVISED -	
	DRAWN - JLS	REVISED -	
PLOT SCALE = 100.000 ' / in.	CHECKED - AB	REVISED -	
PLOT DATE = 11/6/2025	DATE - 11/7/2025	REVISED -	

STATE OF ILLINOIS
DEPARTMENT OF TRANSPORTATION

EXISTING AND PROPOSED SIGNING PLAN
I-80

SCALE: 1" = 50' | SHEET 2 OF 6 SHEETS | STA. 50+00 TO STA. 60+04.87

F.A.I. RTE.	SECTION	COUNTY	TOTAL SHEETS	SHEET NO.
80	FAI 80 21 STRUCTURE 2	WILL	1230	436
		CONTRACT NO. 62R23		
		ILLINOIS	FED. AID PROJECT	

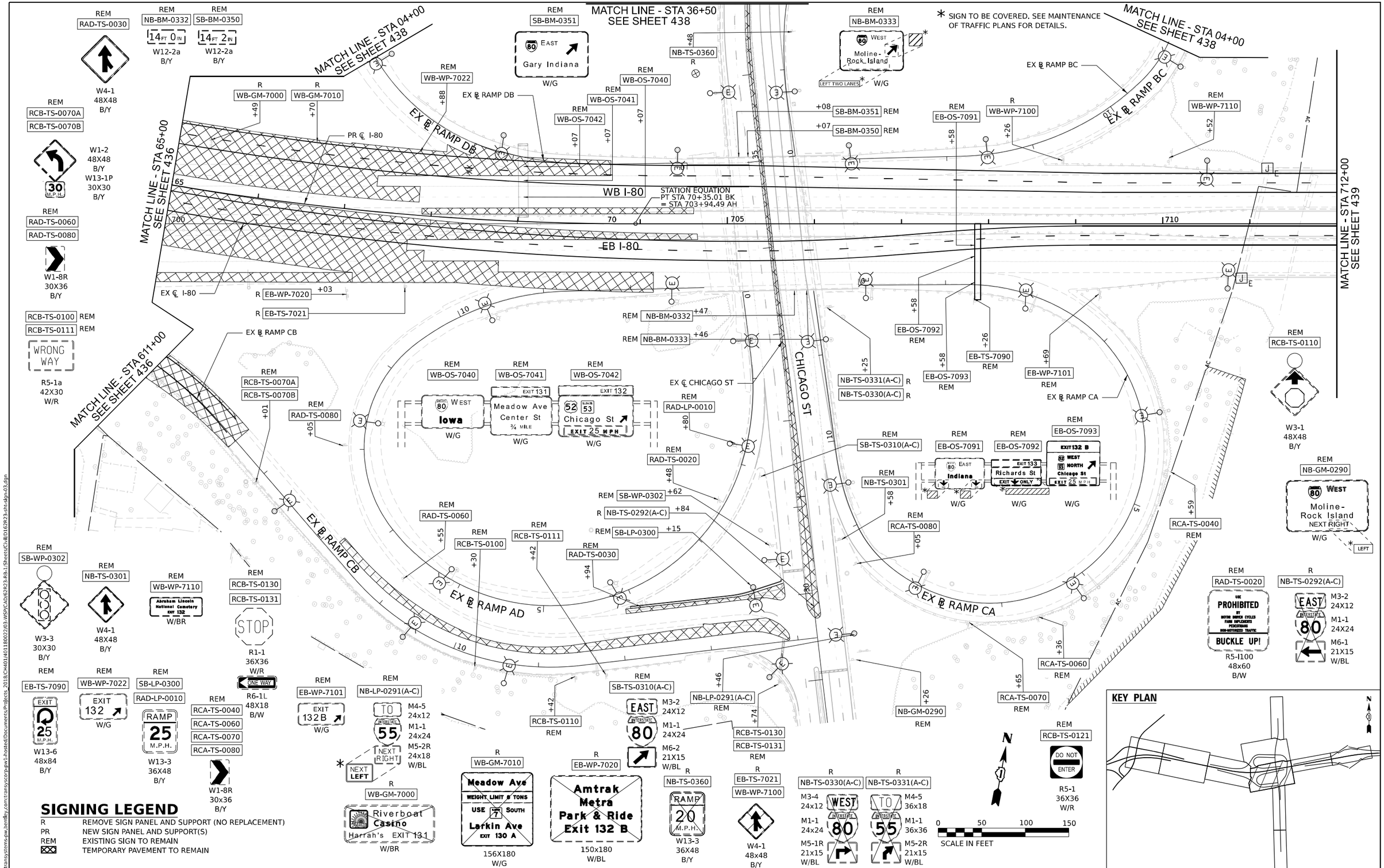

SIGNING LEGEND

R	REMOVE SIGN PANEL AND SUPPORT (NO REPLACEMENT)
PR	NEW SIGN PANEL AND SUPPORT(S)
REM	EXISTING SIGN TO REMAIN
	TEMPORARY PAVEMENT TO REMAIN

MODEL: Default
FILE NAME: pw://transystems-pw.bentley.com:transyscorp-pw1-hosted/Documents/Projects_2018/CH401401180022/03-WSP/CAD/62R23-RB-1/Sheets/Civil/D162R23-sht-sign-03.dgn

Accurate GROUP, INC.

USER NAME = jpioquinto	DESIGNED - JLS	REVISED -	
	DRAWN - JLS	REVISED -	
PLOT SCALE = 100.000 ' / in.	CHECKED - AB	REVISED -	
PLOT DATE = 11/6/2025	DATE - 11/7/2025	REVISED -	

STATE OF ILLINOIS
DEPARTMENT OF TRANSPORTATION

EXISTING AND PROPOSED SIGNING PLAN
I-80

SCALE: 1" = 50' | SHEET 3 OF 6 SHEETS | STA. 65+00 TO STA. 712+00

F.A.I. RTE.	SECTION	COUNTY	TOTAL SHEETS	SHEET NO.
80	FAI 80 21 STRUCTURE 2	WILL	1230	437
		CONTRACT NO. 62R23		
		ILLINOIS	FED. AID PROJECT	

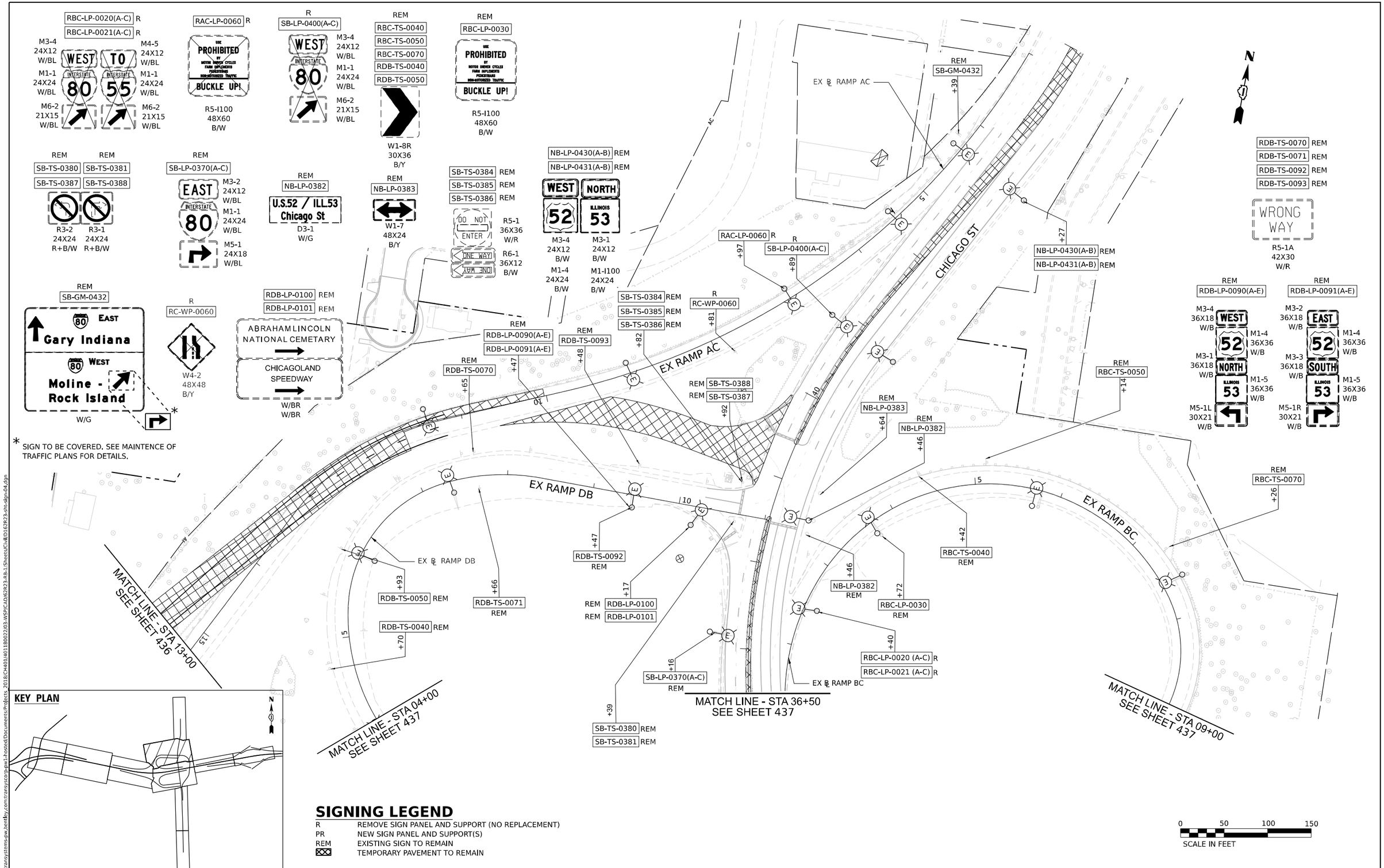

* SIGN TO BE COVERED. SEE MAINTENCE OF TRAFFIC PLANS FOR DETAILS.

SIGNING LEGEND

R	REMOVE SIGN PANEL AND SUPPORT (NO REPLACEMENT)
PR	NEW SIGN PANEL AND SUPPORT(S)
REM	EXISTING SIGN TO REMAIN
⊠	TEMPORARY PAVEMENT TO REMAIN

MODEL: Default
FILE NAME: pw://transystems-pw.bentley.com:transyscorp-pw1-hosted/Documents/Projects_2018/CH401/401180022/03-WSP/CAD/62R23-RB-1/Sheets/Civil/0162R23-sht-sign-04.dgn

Accurate GROUP, INC.

USER NAME = jpioquinto	DESIGNED - JLS	REVISED -	
	DRAWN - JLS	REVISED -	
PLOT SCALE = 100.000 ' / in.	CHECKED - AB	REVISED -	
PLOT DATE = 11/6/2025	DATE - 11/7/2025	REVISED -	

STATE OF ILLINOIS
DEPARTMENT OF TRANSPORTATION

EXISTING AND PROPOSED SIGNING PLAN
I-80

SCALE: 1" = 50' | SHEET 4 OF 6 SHEETS | STA. 214+50 TO STA. 223+00

F.A.I. RTE.	SECTION	COUNTY	TOTAL SHEETS	SHEET NO.
80	FAI 80 21 STRUCTURE 2	WILL	1230	438
		CONTRACT NO. 62R23		
		ILLINOIS	FED. AID PROJECT	

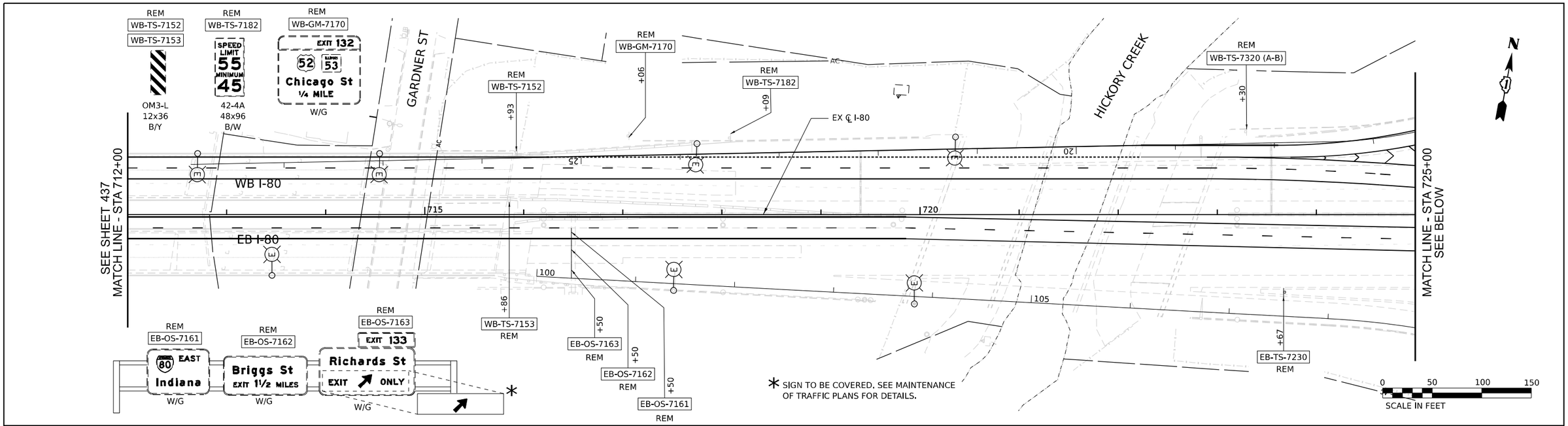

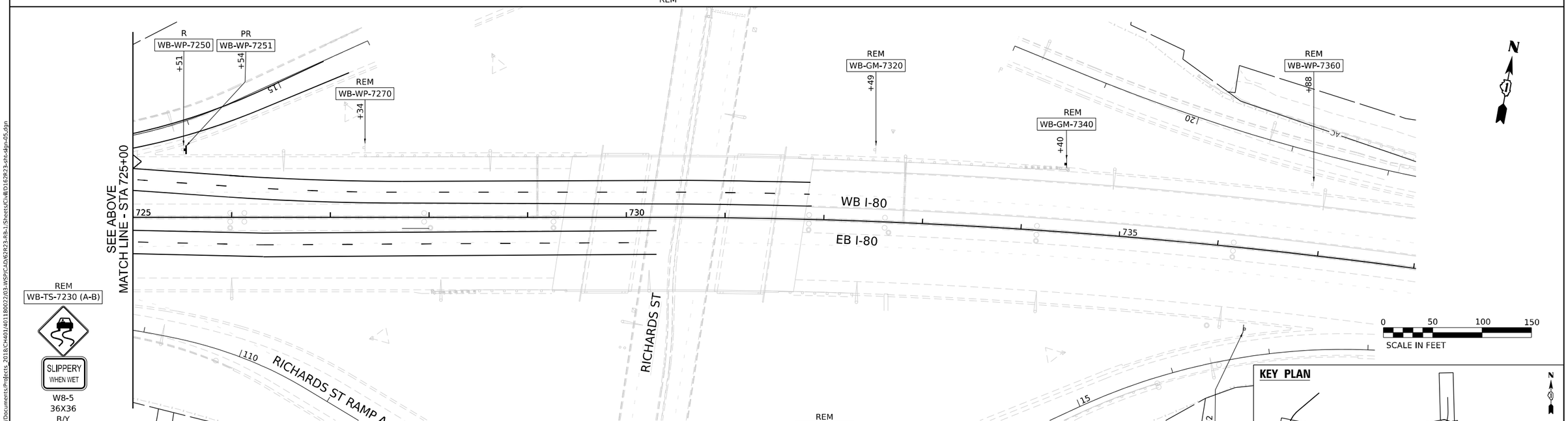

SIGNING LEGEND

R	REMOVE SIGN PANEL AND SUPPORT (NO REPLACEMENT)
PR	NEW SIGN PANEL AND SUPPORT(S)
REM	EXISTING SIGN TO REMAIN
⊠	TEMPORARY PAVEMENT TO REMAIN

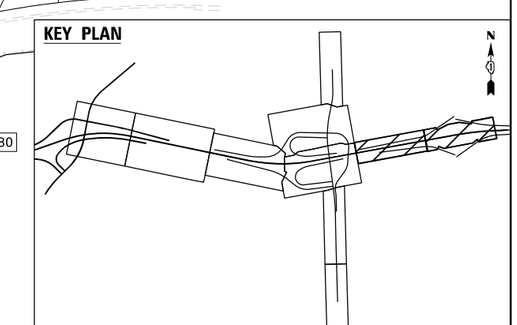

MODEL: Default
FILE NAME: pw://transystems-pw.bentley.com:transyscorp-pw1-hosted/Documents/Projects_2018/CH401/401180022/03-WSP/CAD/62R23-RB-1/Sheets/Civil/D162R23-sht-sign-05.dgn

Accurate GROUP, INC.

USER NAME = jpioquinto	DESIGNED - JLS	REVISED -	
	DRAWN - JLS	REVISED -	
PLOT SCALE = 100.000 ' / in.	CHECKED - AB	REVISED -	
PLOT DATE = 11/6/2025	DATE - 11/7/2025	REVISED -	

STATE OF ILLINOIS
DEPARTMENT OF TRANSPORTATION

EXISTING AND PROPOSED SIGNING PLAN
I-80

SCALE: 1" = 50' | SHEET 5 OF 6 SHEETS | STA. TO STA.

F.A.I. RTE.	SECTION	COUNTY	TOTAL SHEETS	SHEET NO.
80	FAI 80 21 STRUCTURE 2	WILL	1230	439
		CONTRACT NO. 62R23		
		ILLINOIS	FED. AID PROJECT	

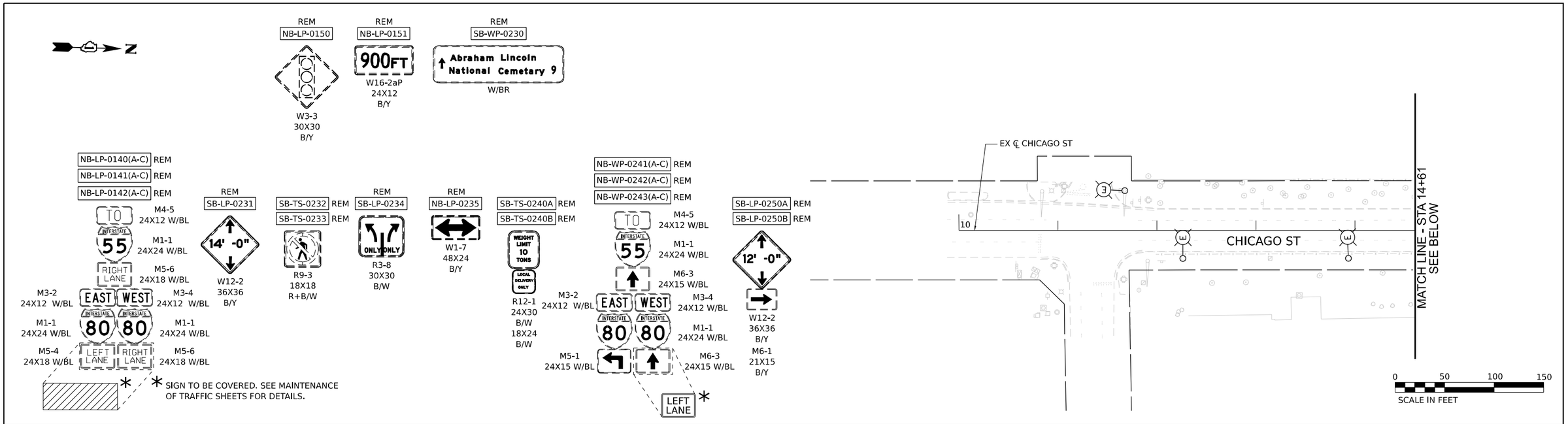

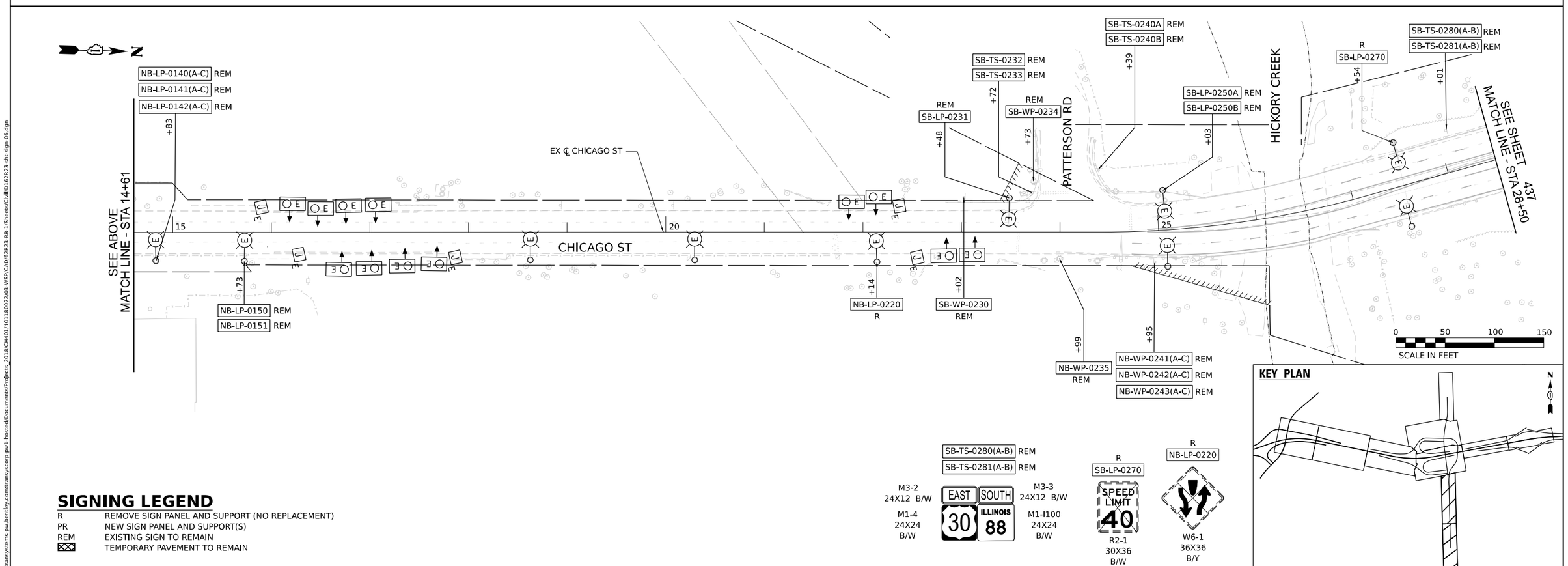

SIGNING LEGEND

R	REMOVE SIGN PANEL AND SUPPORT (NO REPLACEMENT)
PR	NEW SIGN PANEL AND SUPPORT(S)
REM	EXISTING SIGN TO REMAIN
⊠	TEMPORARY PAVEMENT TO REMAIN

MODEL: Default
FILE NAME: pw://transystems-pw.bentley.com:transyscorp-pw1-hosted/Documents/Projects_2018/CH401/401180022/03-WSP/CAD/62R23-R8-1/Sheets/Civil/D162R23-sht-sdgn-06.dgn

Accurate GROUP, INC.

USER NAME = jpioquinto	DESIGNED - JLS	REVISED -	
	DRAWN - JLS	REVISED -	
PLOT SCALE = 100.000 ' / in.	CHECKED - AB	REVISED -	
PLOT DATE = 11/6/2025	DATE - 11/7/2025	REVISED -	

STATE OF ILLINOIS
DEPARTMENT OF TRANSPORTATION

EXISTING AND PROPOSED SIGNING PLAN
I-80

SCALE: 1" = 50' | SHEET 6 OF 6 SHEETS | STA. | TO STA.

F.A.I. RTE.	SECTION	COUNTY	TOTAL SHEETS	SHEET NO.
80	FAI 80 21 STRUCTURE 2	WILL	1230	440

CONTRACT NO. 62R23

ILLINOIS | FED. AID PROJECT

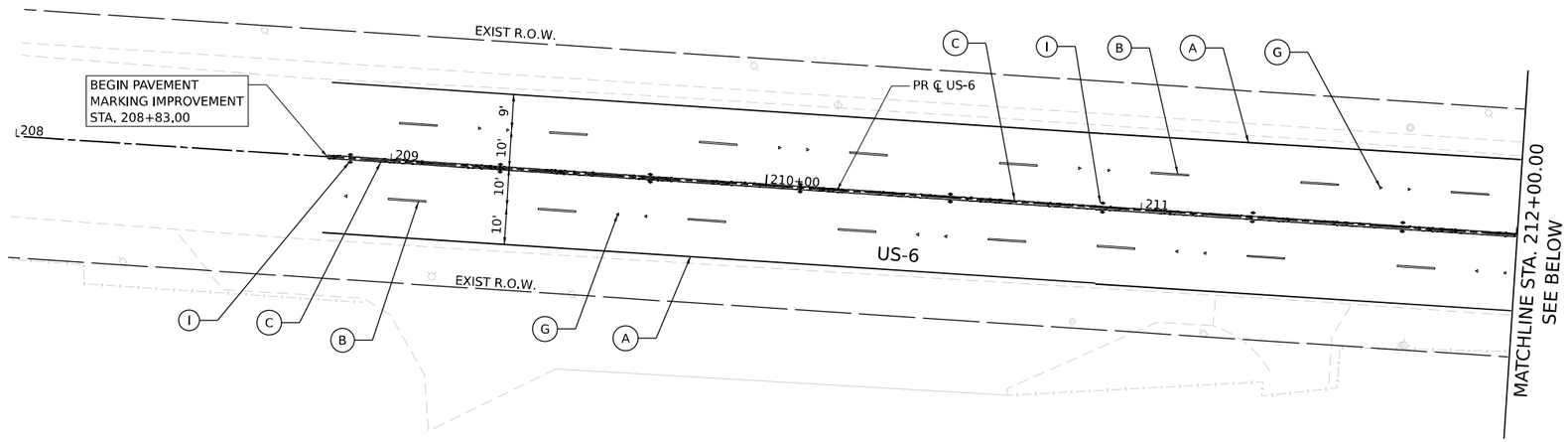

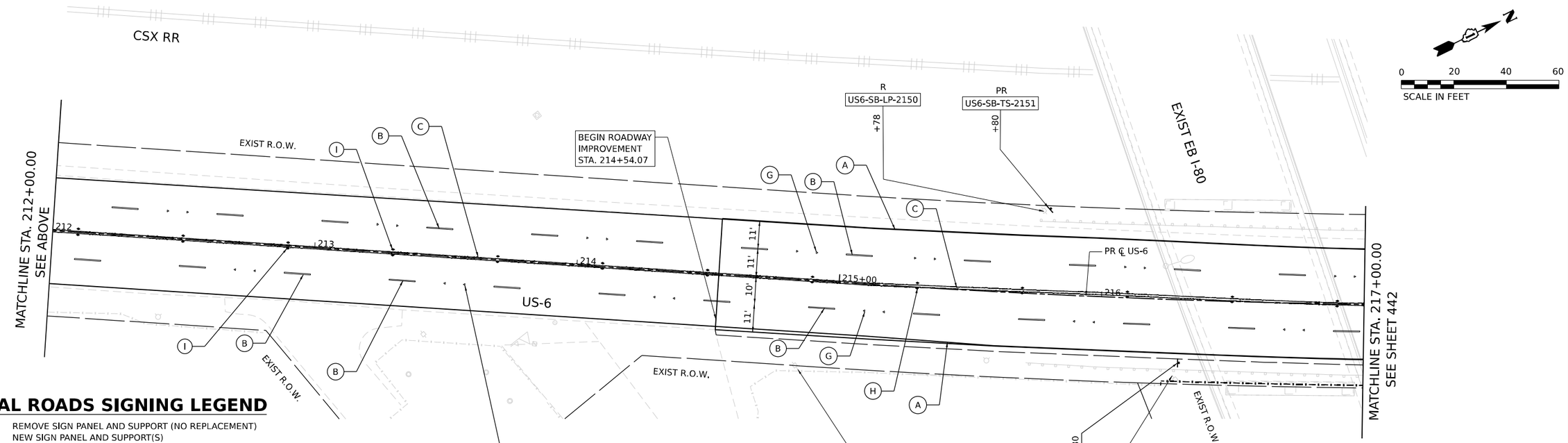

LOCAL ROADS SIGNING LEGEND

R	REMOVE SIGN PANEL AND SUPPORT (NO REPLACEMENT)
PR	NEW SIGN PANEL AND SUPPORT(S)
REM	SIGNS TO REMAIN

SEE SHEET 425 FOR GENERAL SIGNING NOTES AND SIGN SEQUENCE

PAVEMENT MARKING LEGEND

- (A) THERMOPLASTIC PAVEMENT MARKING - LINE 4" (SOLID WHITE)
- (B) THERMOPLASTIC PAVEMENT MARKING - LINE 4" (10' LINE, 30' SKIP, SOLID WHITE)
- (C) THERMOPLASTIC PAVEMENT MARKING - LINE 4" (DOUBLE YELLOW, CENTERLINE @ 11" C-C)
- (D) THERMOPLASTIC PAVEMENT MARKING - LINE 6" (SOLID WHITE, CROSSWALK, PEDESTRIAN)
- (E) THERMOPLASTIC PAVEMENT MARKING - LINE 12" (SOLID WHITE, CROSSWALK, LONGITUDINAL BARS, SCHOOL)
- (F) THERMOPLASTIC PAVEMENT MARKING - LINE 24" (SOLID WHITE, STOP LINE)
- (G) RAISED REFLECTIVE PAVEMENT MARKER (ONE WAY, CRYSTAL)
- (H) RAISED REFLECTIVE PAVEMENT MARKER (TWO WAY, AMBER)
- (I) REPLACEMENT REFLECTOR

REM	R	R	PR	PR
US6-NB-LP-2140	US6-NB-LP-2160	US6-SB-LP-2150	US6-SB-TS-2151	US6-NB-TS-2161
SPEED LIMIT 40		SPEED LIMIT 40	SPEED LIMIT 40	
R2-1 24X30 B/W	W11-10 36X36 B/Y	R2-1 24X30 B/W	R2-1 24X30 B/W	W11-10 36X36 B/Y

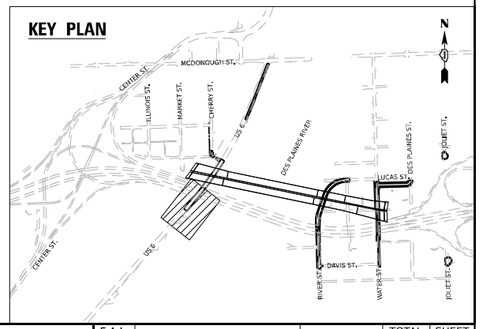

MODEL: Default
FILE NAME: pw://transystems-pw.bentley.com:transyscorp-pw1-hosted/Documents/Projects_2018/CH401/401180022/03-WSP/CAD/62R23-RB-1/Sheets/Civil/0162R23-sht-pmk-sign-01.dgn

Accurate GROUP, INC.

USER NAME = jpioquinto	DESIGNED - JLS	REVISED -	
	DRAWN - JLS	REVISED -	
PLOT SCALE = 40.000 ' / in.	CHECKED - AB	REVISED -	
PLOT DATE = 11/6/2025	DATE - 11/7/2025	REVISED -	

STATE OF ILLINOIS
DEPARTMENT OF TRANSPORTATION

PAVEMENT MARKING AND SIGNING PLAN
US-6

SCALE: 1" = 20' | SHEET 1 OF 13 SHEETS | STA. 214+54.07 TO STA. 217+50

F.A.I. RTE.	SECTION	COUNTY	TOTAL SHEETS	SHEET NO.
80	FAI 80 21 STRUCTURE 2	WILL	1230	441
		CONTRACT NO. 62R23		
		ILLINOIS	FED. AID PROJECT	

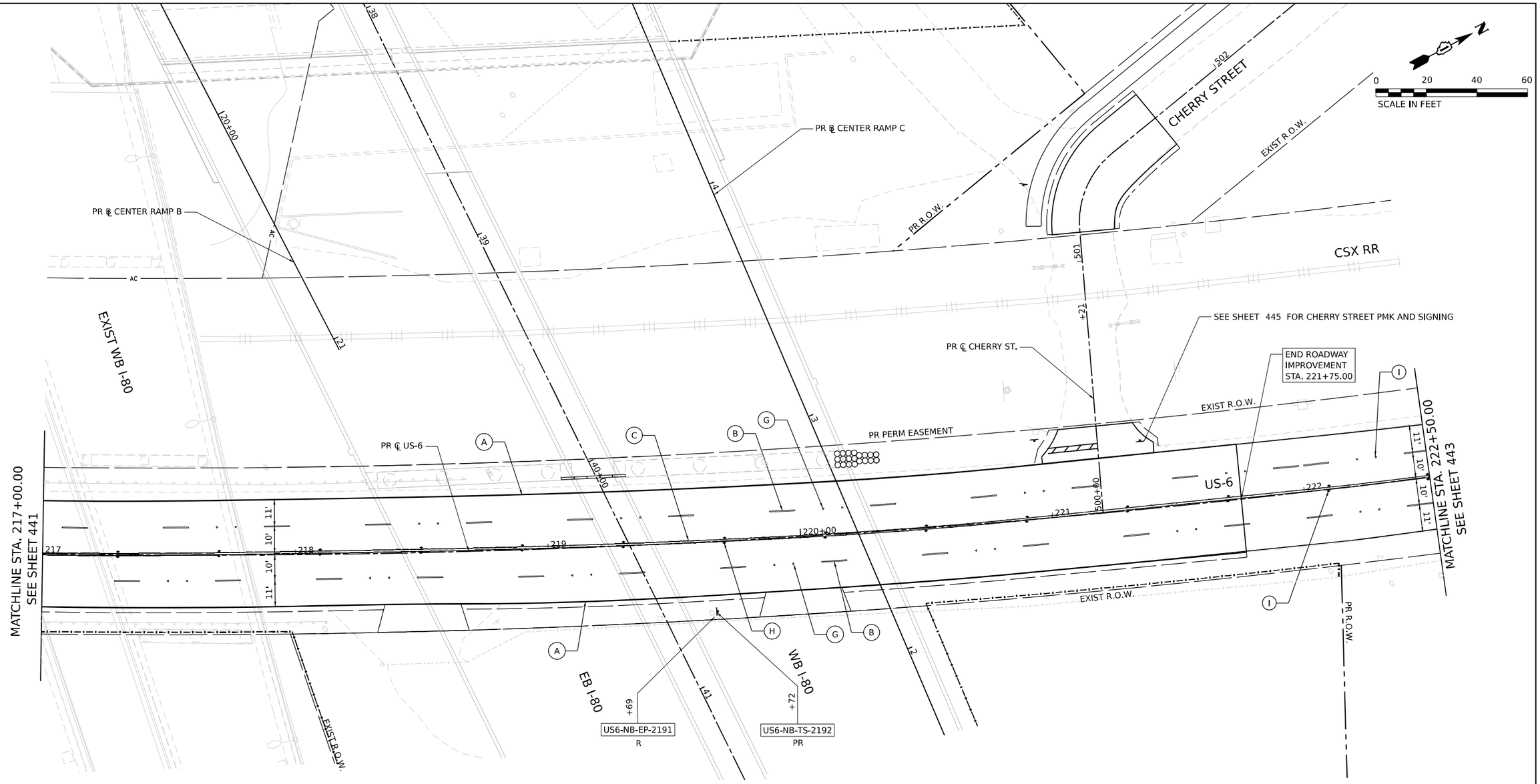

PAVEMENT MARKING LEGEND

- (A) THERMOPLASTIC PAVEMENT MARKING - LINE 4" (SOLID WHITE)
- (B) THERMOPLASTIC PAVEMENT MARKING - LINE 4" (10' LINE, 30' SKIP, SOLID WHITE)
- (C) THERMOPLASTIC PAVEMENT MARKING - LINE 4" (DOUBLE YELLOW, CENTERLINE @ 11" C-C)
- (D) THERMOPLASTIC PAVEMENT MARKING - LINE 6" (SOLID WHITE, CROSSWALK, PEDESTRIAN)
- (E) THERMOPLASTIC PAVEMENT MARKING - LINE 12" (SOLID WHITE, CROSSWALK, LONGITUDINAL BARS, SCHOOL)
- (F) THERMOPLASTIC PAVEMENT MARKING - LINE 24" (SOLID WHITE, STOP LINE)
- (G) RAISED REFLECTIVE PAVEMENT MARKER (ONE WAY, CRYSTAL)
- (H) RAISED REFLECTIVE PAVEMENT MARKER (TWO WAY, AMBER)
- (I) REPLACEMENT REFLECTOR

LOCAL ROADS SIGNING LEGEND

R	REMOVE SIGN PANEL AND SUPPORT (NO REPLACEMENT)
PR	NEW SIGN PANEL AND SUPPORT(S)
REM	SIGNS TO REMAIN

SEE SHEET 425 FOR GENERAL SIGNING NOTES AND SIGN SEQUENCE

R
US6-NB-EP-2191

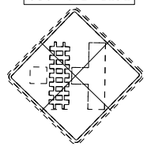

W10-3
36X36
B/Y

PR
US6-NB-TS-2192

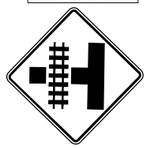

W10-3L
36X36
B/Y

KEY PLAN

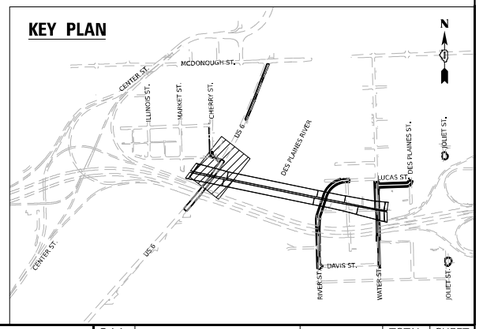

MODEL: Default
FILE NAME: pw://transystems-pw.bentley.com:transyscorp-pw1-hosted/Documents/Projects_2018/CH401/401180022/03-WSP/CAD/62R23-RB-1/Sheets/Civil/D162R23-sht-pmk-sign-02.dgn

Accurate GROUP, INC.

USER NAME = jpioquinto	DESIGNED - JLS	REVISED -	
	DRAWN - JLS	REVISED -	
PLOT SCALE = 40.000 ' / in.	CHECKED - AB	REVISED -	
PLOT DATE = 11/5/2025	DATE - 11/7/2025	REVISED -	

STATE OF ILLINOIS
DEPARTMENT OF TRANSPORTATION

PAVEMENT MARKING AND SIGNING PLAN
US–6

SCALE: 1" = 20' | SHEET 2 OF 13 SHEETS | STA. 205+00 TO STA. 221+42.40

F.A.I. RTE.	SECTION	COUNTY	TOTAL SHEETS	SHEET NO.
80	FAI 80 21 STRUCTURE 2	WILL	1230	442

CONTRACT NO. 62R23

ILLINOIS | FED. AID PROJECT

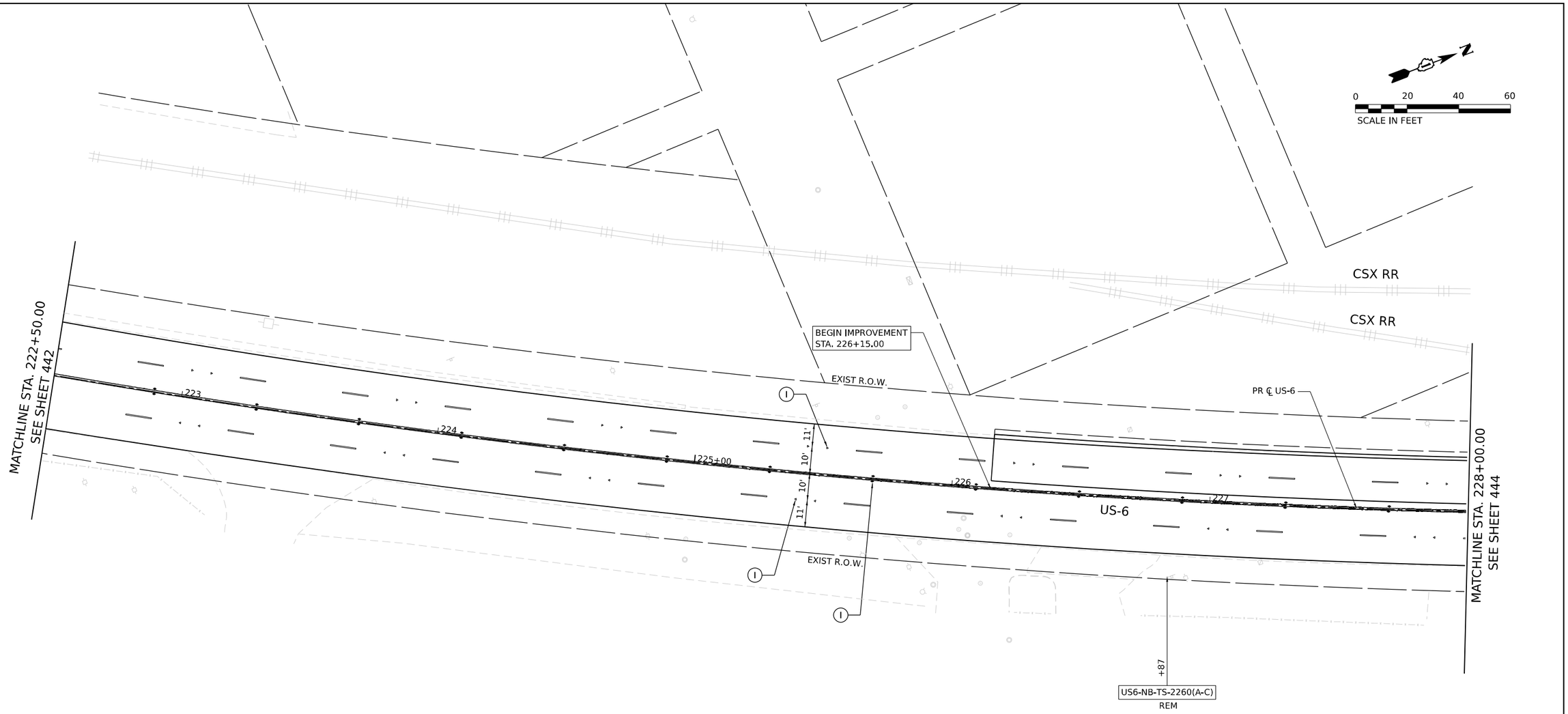

REM
US6-NB-TS-2260(A-C)

M2-1
30X21
B/W

M1-4
36X36
B/W

D3-1
36X12
B/W

PAVEMENT MARKING LEGEND

- (A) THERMOPLASTIC PAVEMENT MARKING - LINE 4'' (SOLID WHITE)
- (B) THERMOPLASTIC PAVEMENT MARKING - LINE 4'' (10' LINE, 30' SKIP, SOLID WHITE)
- (C) THERMOPLASTIC PAVEMENT MARKING - LINE 4'' (DOUBLE YELLOW, CENTERLINE @ 11" C-C)
- (D) THERMOPLASTIC PAVEMENT MARKING - LINE 6'' (SOLID WHITE, CROSSWALK, PEDESTRIAN)
- (E) THERMOPLASTIC PAVEMENT MARKING - LINE 12'' (SOLID WHITE, CROSSWALK, LONGITUDINAL BARS, SCHOOL)
- (F) THERMOPLASTIC PAVEMENT MARKING - LINE 24'' (SOLID WHITE, STOP LINE)
- (G) RAISED REFLECTIVE PAVEMENT MARKER (ONE WAY, CRYSTAL)
- (H) RAISED REFLECTIVE PAVEMENT MARKER (TWO WAY, AMBER)
- (I) REPLACEMENT REFLECTOR

LOCAL ROADS SIGNING LEGEND

R	REMOVE SIGN PANEL AND SUPPORT (NO REPLACEMENT)
PR	NEW SIGN PANEL AND SUPPORT(S)
REM	SIGNS TO REMAIN

SEE SHEET 425 FOR GENERAL SIGNING NOTES AND SIGN SEQUENCE

KEY PLAN

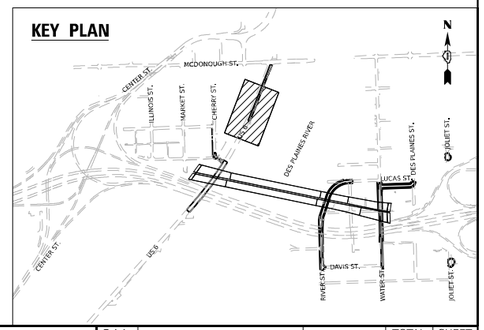

MODEL: Default
FILE NAME: pw://transystems-pw.bentley.com:transyscorp-pw1-hosted/Documents/Projects_2018/CH401/401180022/03-WSP/CAD/62R23-RB-1/Sheets/Civil/D162R23-sht-pmk-sign-03.dgn

Accurate GROUP, INC.

USER NAME = jpioquinto	DESIGNED -	REVISED - JLS	
	DRAWN -	REVISED - JLS	
PLOT SCALE = 40.000 ' / in.	CHECKED -	REVISED - AB	
PLOT DATE = 11/5/2025	DATE - 11/7/2025	REVISED -	

STATE OF ILLINOIS
DEPARTMENT OF TRANSPORTATION

PAVEMENT MARKING AND SIGNING PLAN
US–6

SCALE: 1" = 20' | SHEET 3 OF 13 SHEETS | STA. 226+75 TO STA. 230+50

F.A.I. RTE.	SECTION	COUNTY	TOTAL SHEETS	SHEET NO.
80	FAI 80 21 STRUCTURE 2	WILL	1230	443
		CONTRACT NO. 62R23		
	ILLINOIS	FED. AID PROJECT		

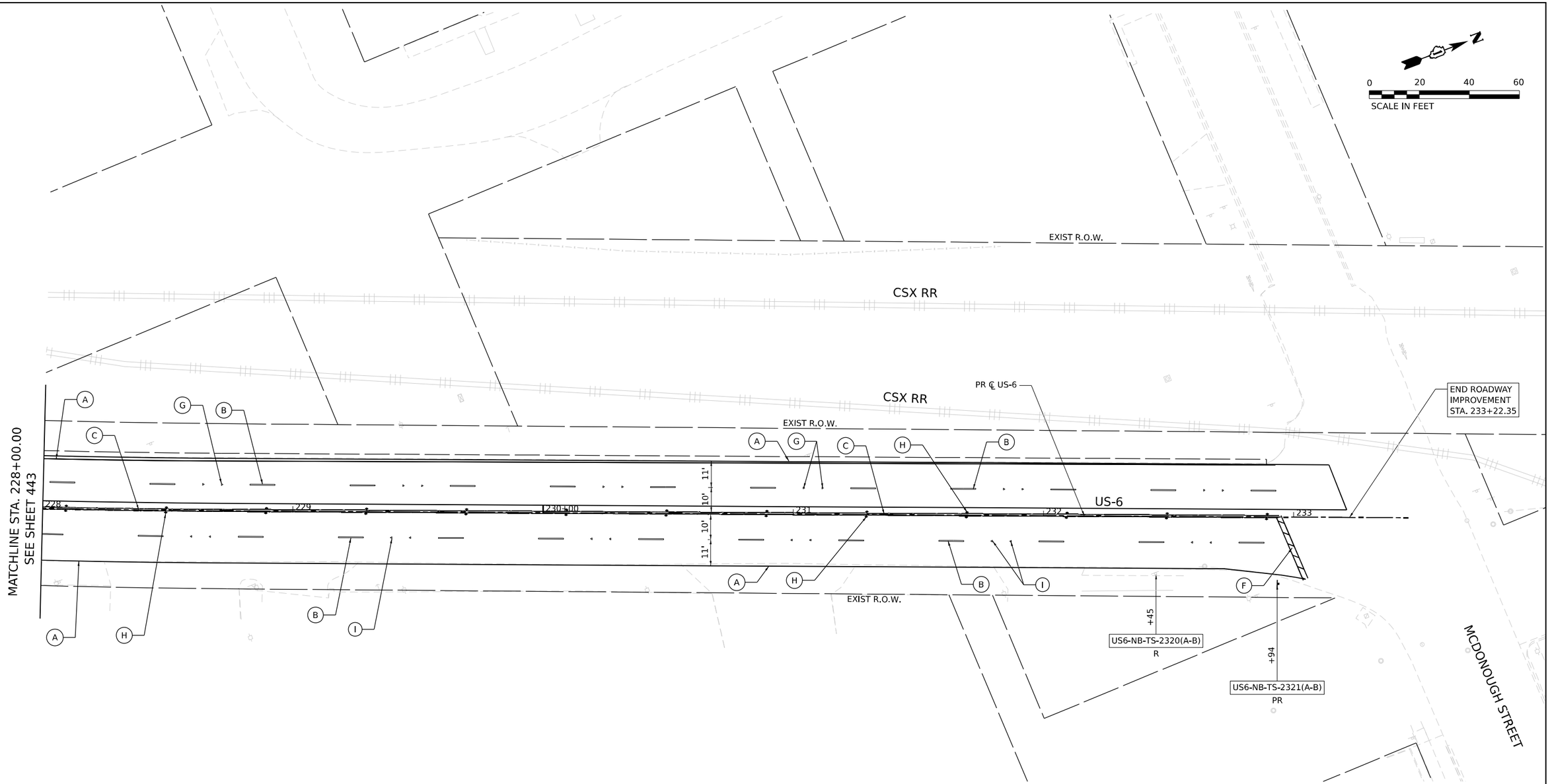

PAVEMENT MARKING LEGEND

- (A) THERMOPLASTIC PAVEMENT MARKING - LINE 4'' (SOLID WHITE)
- (B) THERMOPLASTIC PAVEMENT MARKING - LINE 4'' (10' LINE, 30' SKIP, SOLID WHITE)
- (C) THERMOPLASTIC PAVEMENT MARKING - LINE 4'' (DOUBLE YELLOW, CENTERLINE @ 11" C-C)
- (D) THERMOPLASTIC PAVEMENT MARKING - LINE 6'' (SOLID WHITE, CROSSWALK, PEDESTRIAN)
- (E) THERMOPLASTIC PAVEMENT MARKING - LINE 12'' (SOLID WHITE, CROSSWALK, LONGITUDINAL BARS, SCHOOL)
- (F) THERMOPLASTIC PAVEMENT MARKING - LINE 24'' (SOLID WHITE, STOP LINE)
- (G) RAISED REFLECTIVE PAVEMENT MARKER (ONE WAY, CRYSTAL)
- (H) RAISED REFLECTIVE PAVEMENT MARKER (TWO WAY, AMBER)
- (I) REPLACEMENT REFLECTOR

LOCAL ROADS SIGNING LEGEND

R	REMOVE SIGN PANEL AND SUPPORT (NO REPLACEMENT)
PR	NEW SIGN PANEL AND SUPPORT(S)
REM	SIGNS TO REMAIN

SEE SHEET 425 FOR GENERAL SIGNING NOTES AND SIGN SEQUENCE

R
US6-NB-TS-2320(A-B)

R1-1
36X36
W/R

W4-4P
24X12
B/Y

PR
US6-NB-TS-2321(A-B)

W4-4P
24X12
B/Y

KEY PLAN

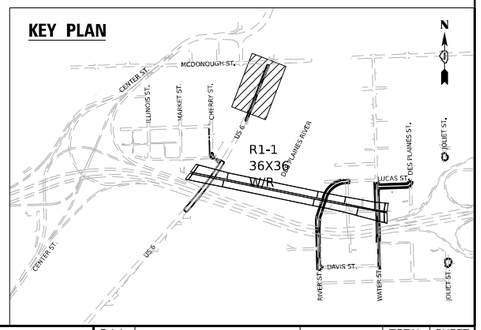

MODEL: Default
FILE NAME: pw://transystems-pw.bentley.com:transyscorp-pw1-hosted/Documents/Projects_2018/CH401/401180022/03-WSP/CAD/62R23-RB-1/Sheets/CuBID162R23-sht-pmk-sign-04.dgn

Accurate GROUP, INC.

USER NAME = jpioquinto	DESIGNED - JLS	REVISED -	
	DRAWN - JLS	REVISED -	
PLOT SCALE = 40.000 ' / in.	CHECKED - AB	REVISED -	
PLOT DATE = 11/5/2025	DATE - 11/7/2025	REVISED -	

STATE OF ILLINOIS
DEPARTMENT OF TRANSPORTATION

PAVEMENT MARKING AND SIGNING PLAN
US–6

SCALE: 1" = 20' | SHEET 4 OF 13 SHEETS | STA. 230+50 TO STA. 233+15

F.A.I. RTE.	SECTION	COUNTY	TOTAL SHEETS	SHEET NO.
80	FAI 80 21 STRUCTURE 2	WILL	1230	444
		CONTRACT NO. 62R23		
		ILLINOIS	FED. AID PROJECT	

PAVEMENT MARKING LEGEND

- (A) THERMOPLASTIC PAVEMENT MARKING - LINE 4" (SOLID WHITE)
- (B) THERMOPLASTIC PAVEMENT MARKING - LINE 4" (10' LINE, 30' SKIP, SOLID WHITE)
- (C) THERMOPLASTIC PAVEMENT MARKING - LINE 4" (DOUBLE YELLOW, CENTERLINE @ 11" C-C)
- (D) THERMOPLASTIC PAVEMENT MARKING - LINE 6" (SOLID WHITE, CROSSWALK, PEDESTRIAN)
- (E) THERMOPLASTIC PAVEMENT MARKING - LINE 12" (SOLID WHITE, CROSSWALK, LONGITUDINAL BARS, SCHOOL)
- (F) THERMOPLASTIC PAVEMENT MARKING - LINE 24" (SOLID WHITE, STOP LINE)
- (G) RAISED REFLECTIVE PAVEMENT MARKER (ONE WAY, CRYSTAL)
- (H) RAISED REFLECTIVE PAVEMENT MARKER (TWO WAY, AMBER)
- (I) REPLACEMENT REFLECTOR

LOCAL ROADS SIGNING LEGEND

R	REMOVE SIGN PANEL AND SUPPORT (NO REPLACEMENT)
PR	NEW SIGN PANEL AND SUPPORT(S)
REM	SIGNS TO REMAIN

SEE SHEET 425 FOR GENERAL SIGNING NOTES AND SIGN SEQUENCE

0 20 40 60
SCALE IN FEET

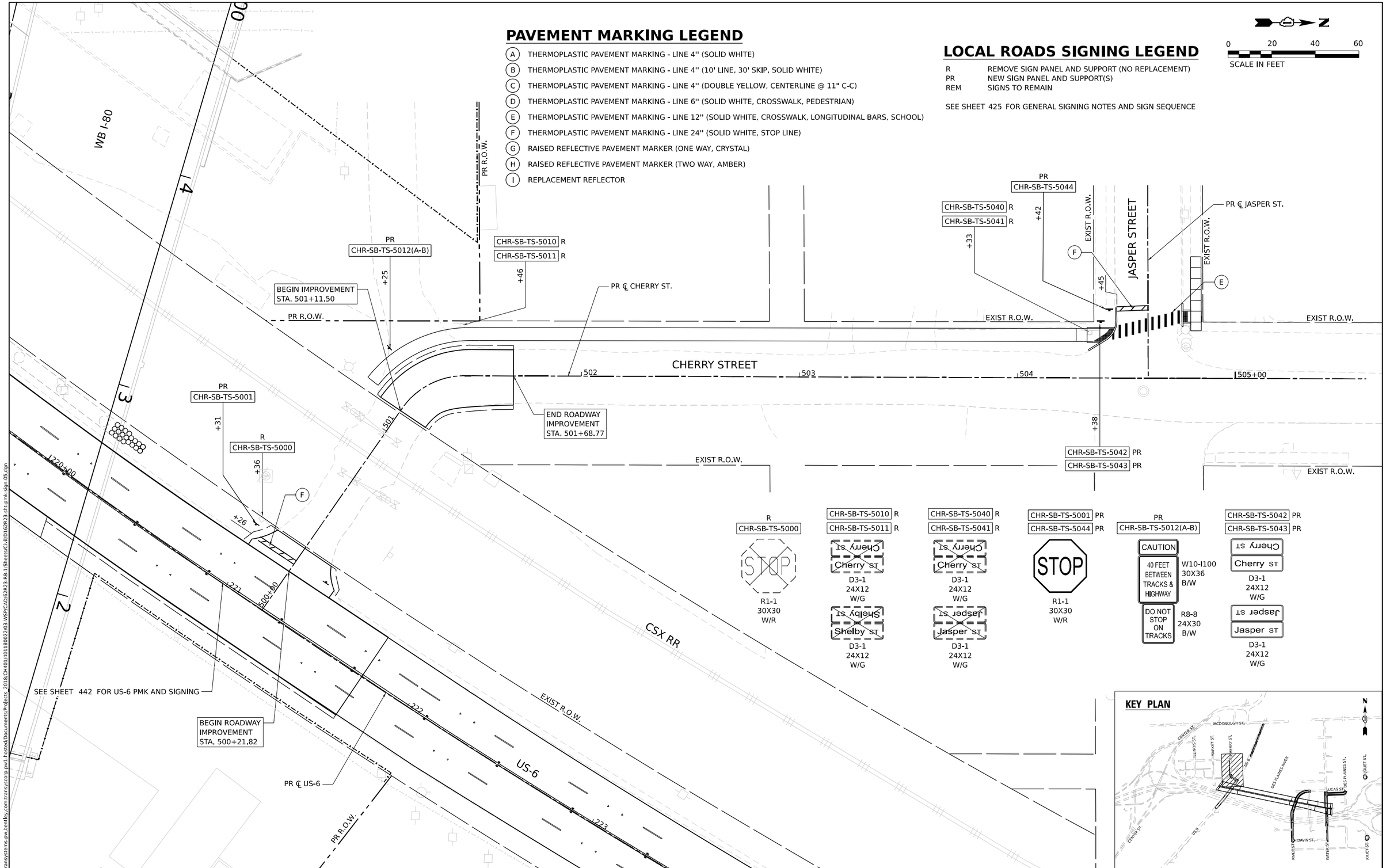

USER NAME = jpioquinto	DESIGNED - JLS	REVISED -	
	DRAWN - JLS	REVISED -	
PLOT SCALE = 40.000 ' / in.	CHECKED - AB	REVISED -	
PLOT DATE = 11/6/2025	DATE - 11/7/2025	REVISED -	

Accurate GROUP, INC.

STATE OF ILLINOIS
DEPARTMENT OF TRANSPORTATION

PAVEMENT MARKING AND SIGNING PLAN
CHERRY STREET

SCALE: 1"=20' | SHEET 5 OF 13 SHEETS | STA. 500+21.82 TO STA. 501+68.77

F.A.I. RTE.	SECTION	COUNTY	TOTAL SHEETS	SHEET NO.
80	FAI 80 21 STRUCTURE 2	WILL	1230	445

CONTRACT NO. 62R23

ILLINOIS | FED. AID PROJECT

MODEL: Default
FILE NAME: pw://transystems-pw.bentley.com:transyscorp-pw1-hosted/Documents/Projects_2018/CH401/401180022/03-WSP/CAD/62R23-RB-1/Sheets/Civil/0162R23-sht-pmk-sign-05.dgn

LOCAL ROADS SIGNING LEGEND

R	REMOVE SIGN PANEL AND SUPPORT (NO REPLACEMENT)
PR	NEW SIGN PANEL AND SUPPORT(S)
REM	SIGNS TO REMAIN

SEE SHEET 425 FOR GENERAL SIGNING NOTES AND SIGN SEQUENCE

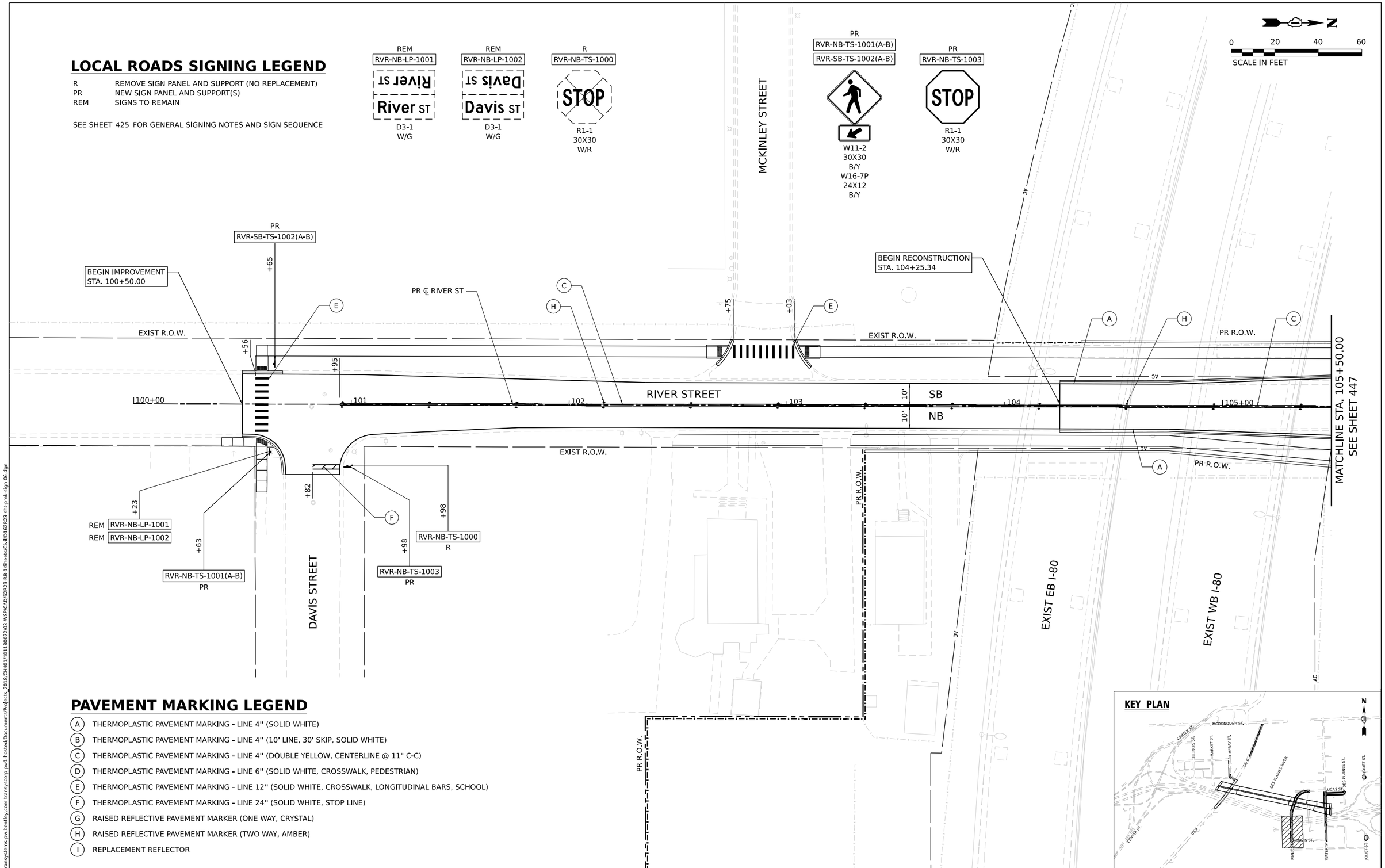

PAVEMENT MARKING LEGEND

- (A) THERMOPLASTIC PAVEMENT MARKING - LINE 4'' (SOLID WHITE)
- (B) THERMOPLASTIC PAVEMENT MARKING - LINE 4'' (10' LINE, 30' SKIP, SOLID WHITE)
- (C) THERMOPLASTIC PAVEMENT MARKING - LINE 4'' (DOUBLE YELLOW, CENTERLINE @ 11" C-C)
- (D) THERMOPLASTIC PAVEMENT MARKING - LINE 6'' (SOLID WHITE, CROSSWALK, PEDESTRIAN)
- (E) THERMOPLASTIC PAVEMENT MARKING - LINE 12'' (SOLID WHITE, CROSSWALK, LONGITUDINAL BARS, SCHOOL)
- (F) THERMOPLASTIC PAVEMENT MARKING - LINE 24'' (SOLID WHITE, STOP LINE)
- (G) RAISED REFLECTIVE PAVEMENT MARKER (ONE WAY, CRYSTAL)
- (H) RAISED REFLECTIVE PAVEMENT MARKER (TWO WAY, AMBER)
- (I) REPLACEMENT REFLECTOR

MODEL: Default
FILE NAME: pw://transystems-pw.bentley.com:transyscorp-pw1-hosted/Documents/Projects_2018/CH401/401180022/03-WSP/CAD/62R23-RB-1/Sheets/Civil/0162R23-sh-pmk-sign-06.dgn

Accurate GROUP, INC.

USER NAME = jpioquinto	DESIGNED - JLS	REVISED -	
	DRAWN - JLS	REVISED -	
PLOT SCALE = 40.000 ' / in.	CHECKED - AB	REVISED -	
PLOT DATE = 11/5/2025	DATE - 11/7/2025	REVISED -	

STATE OF ILLINOIS
DEPARTMENT OF TRANSPORTATION

PAVEMENT MARKING AND SIGNING PLAN
RIVER STREET

SCALE: 1"=20' | SHEET 6 OF 13 SHEETS | STA. 100+50 TO STA. 105+50

F.A.I. RTE.	SECTION	COUNTY	TOTAL SHEETS	SHEET NO.
80	FAI 80 21 STRUCTURE 2	WILL	1230	446
		CONTRACT NO. 62R23		
		ILLINOIS	FED. AID PROJECT	

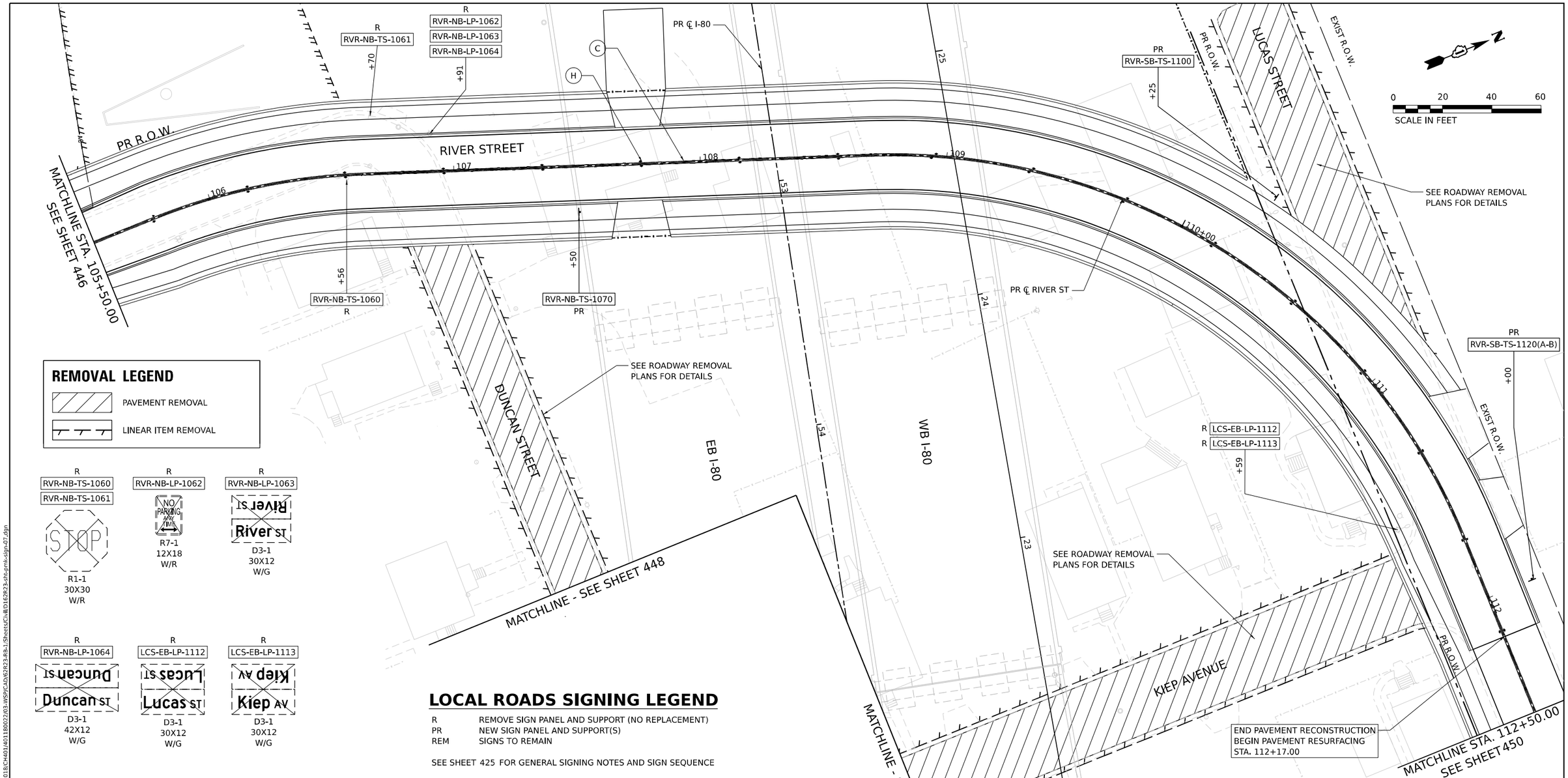

REMOVAL LEGEND

- PAVEMENT REMOVAL
- LINEAR ITEM REMOVAL

R RVR-NB-TS-1060 / RVR-NB-TS-1061 — STOP — R1-1 30X30 W/R

R RVR-NB-LP-1062 — NO PARKING ANY TIME — R7-1 12X18 W/R

R RVR-NB-LP-1063 — River ST / River ST — D3-1 30X12 W/G

R RVR-NB-LP-1064 — Duncan ST / Duncan ST — D3-1 42X12 W/G

R LCS-EB-LP-1112 — Lucas ST / Lucas ST — D3-1 30X12 W/G

R LCS-EB-LP-1113 — Kiep AV / Kiep AV — D3-1 30X12 W/G

LOCAL ROADS SIGNING LEGEND

R	REMOVE SIGN PANEL AND SUPPORT (NO REPLACEMENT)
PR	NEW SIGN PANEL AND SUPPORT(S)
REM	SIGNS TO REMAIN

SEE SHEET 425 FOR GENERAL SIGNING NOTES AND SIGN SEQUENCE

PAVEMENT MARKING LEGEND

- (A) THERMOPLASTIC PAVEMENT MARKING - LINE 4'' (SOLID WHITE)
- (B) THERMOPLASTIC PAVEMENT MARKING - LINE 4'' (10' LINE, 30' SKIP, SOLID WHITE)
- (C) THERMOPLASTIC PAVEMENT MARKING - LINE 4'' (DOUBLE YELLOW, CENTERLINE @ 11" C-C)
- (D) THERMOPLASTIC PAVEMENT MARKING - LINE 6'' (SOLID WHITE, CROSSWALK, PEDESTRIAN)
- (E) THERMOPLASTIC PAVEMENT MARKING - LINE 12'' (SOLID WHITE, CROSSWALK, LONGITUDINAL BARS, SCHOOL)
- (F) THERMOPLASTIC PAVEMENT MARKING - LINE 24'' (SOLID WHITE, STOP LINE)
- (G) RAISED REFLECTIVE PAVEMENT MARKER (ONE WAY, CRYSTAL)
- (H) RAISED REFLECTIVE PAVEMENT MARKER (TWO WAY, AMBER)
- (I) REPLACEMENT REFLECTOR

PR RVR-NB-TS-1070 — W1-2R 30X30 B/Y

PR RVR-SB-TS-1100 — W1-6 48X24 B/Y

PR RVR-SB-TS-1120(A-B) — W1-2 30X30 B/Y; 25 MPH — W13-1 18X18 B/Y

KEY PLAN

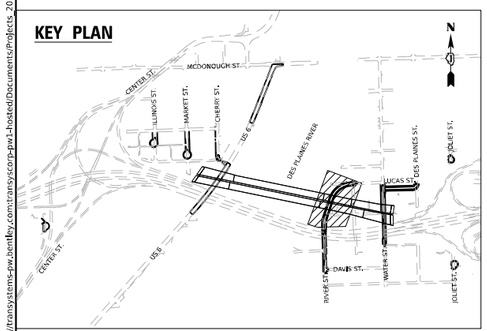

MODEL: Default
FILE NAME: pw://transystems-pw.bentley.com:transyscorp-pw1-hosted/Documents/Projects_2018/CH401/401180022/03-WSP/CAD/62R23-RB-1/Sheets/Civil/D162R23-sht-pmk-sign-07.dgn

Accurate GROUP, INC.	USER NAME = jpioquinto	DESIGNED - JLS	REVISED -	STATE OF ILLINOIS DEPARTMENT OF TRANSPORTATION	PAVEMENT MARKING AND SIGNING PLAN RIVER STREET	F.A.I. RTE.	SECTION	COUNTY	TOTAL SHEETS / SHEET NO.
		DRAWN - JLS	REVISED -			80	FAI 80 21 STRUCTURE 2	WILL	1230 / 447
	PLOT SCALE = 40.000 ' / in.	CHECKED - AB	REVISED -					CONTRACT NO. 62R23	
	PLOT DATE = 11/6/2025	DATE - 11/7/2025	REVISED -		SCALE: 1" = 20' / SHEET 7 OF 13 SHEETS / STA. 105+50 TO STA. 112+17			ILLINOIS / FED. AID PROJECT	

LOCAL ROADS SIGNING LEGEND

R	REMOVE SIGN PANEL AND SUPPORT (NO REPLACEMENT)
PR	NEW SIGN PANEL AND SUPPORT(S)
REM	SIGNS TO REMAIN

SEE SHEET 425 FOR GENERAL SIGNING NOTES AND SIGN SEQUENCE

KP-SB-TS-6012 R
KP-SB-TS-6003 R
KP-SB-TS-6014 R
NO PARKING ANY TIME
R7-1
12X18
R/W

KP-SB-TS-6000 R
KP-SB-TS-6013 R
STOP
R1-1
30X30
W/R

KP-SB-TS-6004 R
DEAD END
W14-1
30X30
B/Y

KP-SB-TS-6001 R
Duncan ST
D3-1
42X12
W/G

KP-SB-TS-6002 R
Kiep AV
D3-1
30X12
W/G

KP-SB-TS-6015 R
KP-SB-TS-6016 R
OM1-3
30X30
Y

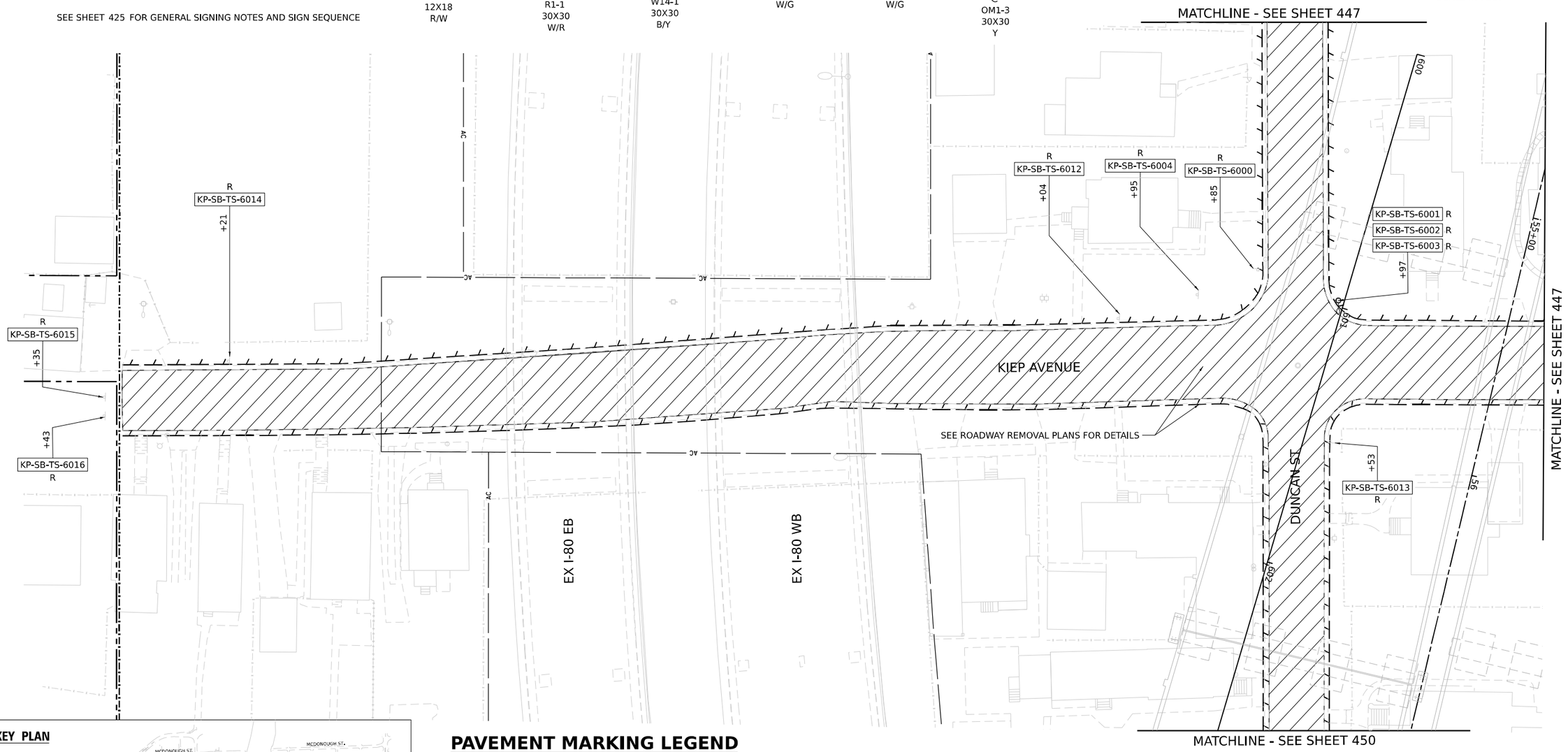

KEY PLAN

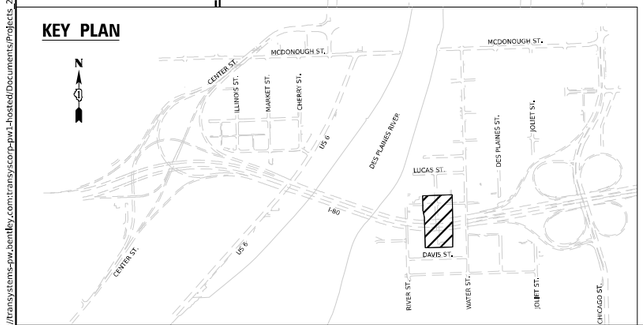

PAVEMENT MARKING LEGEND

- (A) THERMOPLASTIC PAVEMENT MARKING - LINE 4'' (SOLID WHITE)
- (B) THERMOPLASTIC PAVEMENT MARKING - LINE 4'' (10' LINE, 30' SKIP, SOLID WHITE)
- (C) THERMOPLASTIC PAVEMENT MARKING - LINE 4'' (DOUBLE YELLOW, CENTERLINE @ 11" C-C)
- (D) THERMOPLASTIC PAVEMENT MARKING - LINE 6'' (SOLID WHITE, CROSSWALK, PEDESTRIAN)
- (E) THERMOPLASTIC PAVEMENT MARKING - LINE 12'' (SOLID WHITE, CROSSWALK, LONGITUDINAL BARS, SCHOOL)
- (F) THERMOPLASTIC PAVEMENT MARKING - LINE 24'' (SOLID WHITE, STOP LINE)
- (G) RAISED REFLECTIVE PAVEMENT MARKER (ONE WAY, CRYSTAL)
- (H) RAISED REFLECTIVE PAVEMENT MARKER (TWO WAY, AMBER)
- (I) REPLACEMENT REFLECTOR

REMOVAL LEGEND

- PAVEMENT REMOVAL
- LINEAR ITEM REMOVAL

MODEL: Sheet1
FILE NAME: pw://transystems-pw.bentley.com:transyscorp-pw1-hosted/Documents/Projects_2018/CH401/401180022/03-WSP/CAD/62R23-RB-1/Sheets/CulID162R23-sth-pmk-sign-08.dgn

Accurate GROUP, INC.

USER NAME = jpioquinto	DESIGNED - JLS	REVISED -	
	DRAWN - JLS	REVISED -	
PLOT SCALE = 40.000 ' / in.	CHECKED - AB	REVISED -	
PLOT DATE = 11/5/2025	DATE - 11/7/2025	REVISED -	

STATE OF ILLINOIS
DEPARTMENT OF TRANSPORTATION

PAVEMENT MARKING AND SIGNING PLAN
RIVER STREET

SCALE: 1" = 20' | SHEET 8 OF 13 SHEETS | STA. | TO STA.

F.A.I. RTE.	SECTION	COUNTY	TOTAL SHEETS	SHEET NO.
80	FAI 80 21 STRUCTURE 2	WILL	1230	448
		CONTRACT NO. 62R23		
		ILLINOIS	FED. AID PROJECT	

LOCAL ROADS SIGNING LEGEND

R	REMOVE SIGN PANEL AND SUPPORT (NO REPLACEMENT)
PR	NEW SIGN PANEL AND SUPPORT(S)
REM	SIGNS TO REMAIN

SEE SHEET 425 FOR GENERAL SIGNING NOTES AND SIGN SEQUENCE

REM WTR-SB-TS-2980 — Water ST / Water ST — D3-1, 30X12, W/G

REM WTR-SB-TS-2981 — Davis ST / Davis ST — D3-1, 30X12, W/G

REM WTR-SB-TS-2982 — STOP — R1-1, 30X30, W/R

R WTR-SB-TS-3010 — NO PARKING ANY TIME — R7-1, 12X18, R/W

PR WTR-SB-TS-3011 — NO PARKING ANY TIME — R7-1, 12X18, R/W

N

0 20 40 60
SCALE IN FEET

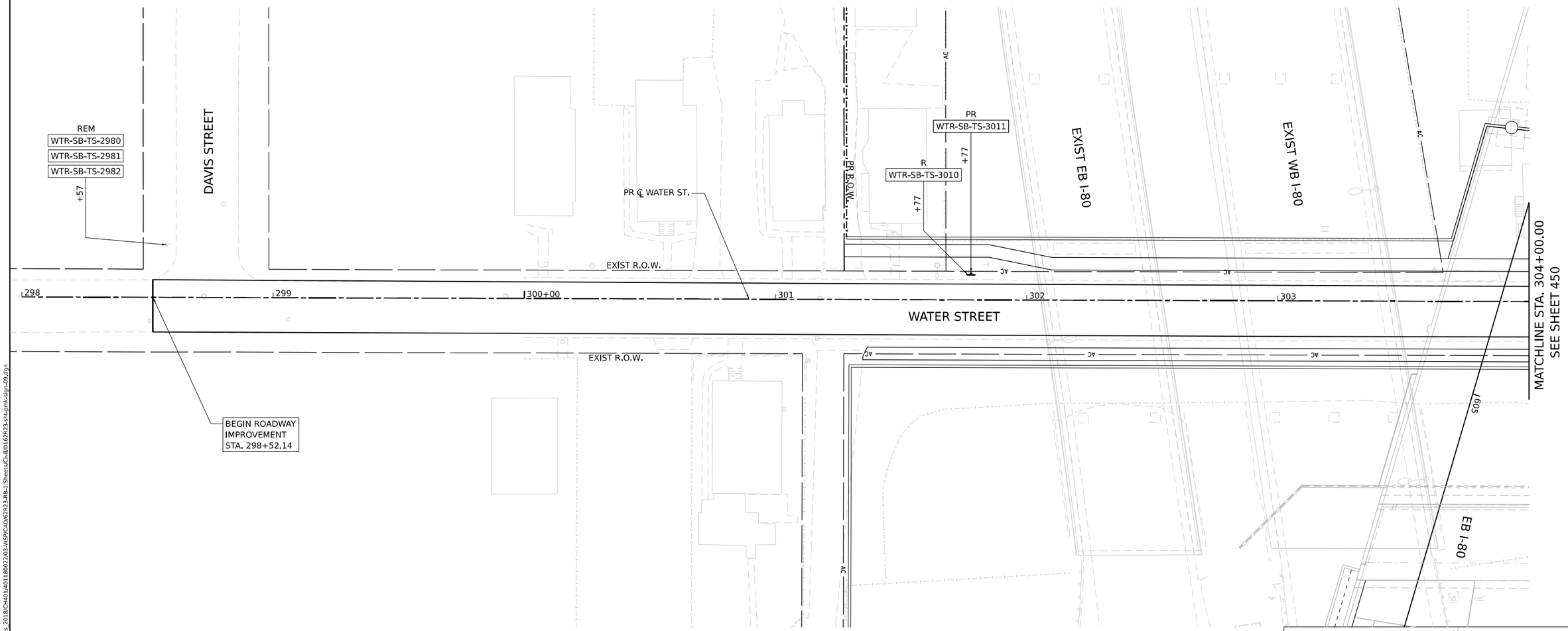

PAVEMENT MARKING LEGEND

- (A) THERMOPLASTIC PAVEMENT MARKING - LINE 4" (SOLID WHITE)
- (B) THERMOPLASTIC PAVEMENT MARKING - LINE 4" (10' LINE, 30' SKIP, SOLID WHITE)
- (C) THERMOPLASTIC PAVEMENT MARKING - LINE 4" (DOUBLE YELLOW, CENTERLINE @ 11" C-C)
- (D) THERMOPLASTIC PAVEMENT MARKING - LINE 6" (SOLID WHITE, CROSSWALK, PEDESTRIAN)
- (E) THERMOPLASTIC PAVEMENT MARKING - LINE 12" (SOLID WHITE, CROSSWALK, LONGITUDINAL BARS, SCHOOL)
- (F) THERMOPLASTIC PAVEMENT MARKING - LINE 24" (SOLID WHITE, STOP LINE)
- (G) RAISED REFLECTIVE PAVEMENT MARKER (ONE WAY, CRYSTAL)
- (H) RAISED REFLECTIVE PAVEMENT MARKER (TWO WAY, AMBER)
- (I) REPLACEMENT REFLECTOR

KEY PLAN

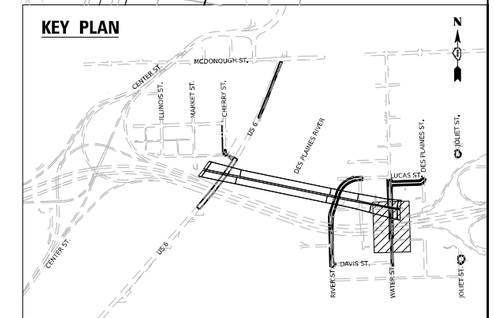

MODEL: Default
FILE NAME: pw://transystems-pw.bentley.com:transyscorp-pw1-hosted/Documents/Projects_2018/CH401/401180022/03-WSP/CAD/62R23-RB-1/Sheets/CivilD162R23-sht-pmk-sign-09.dgn

Accurate GROUP, INC.

USER NAME = jpioquinto	DESIGNED - JLS	REVISED -
	DRAWN - JLS	REVISED -
PLOT SCALE = 40.000 ' / in.	CHECKED - AB	REVISED -
PLOT DATE = 11/5/2025	DATE - 11/7/2025	REVISED -

STATE OF ILLINOIS
DEPARTMENT OF TRANSPORTATION

PAVEMENT MARKING AND SIGNING PLAN
WATER STREET

SCALE: 1" = 20' | SHEET 9 OF 13 SHEETS | STA. | TO STA.

F.A.I. RTE.	SECTION	COUNTY	TOTAL SHEETS	SHEET NO.
80	FAI 80 21 STRUCTURE 2	WILL	1230	449
		CONTRACT NO. 62R23		
	ILLINOIS	FED. AID PROJECT		

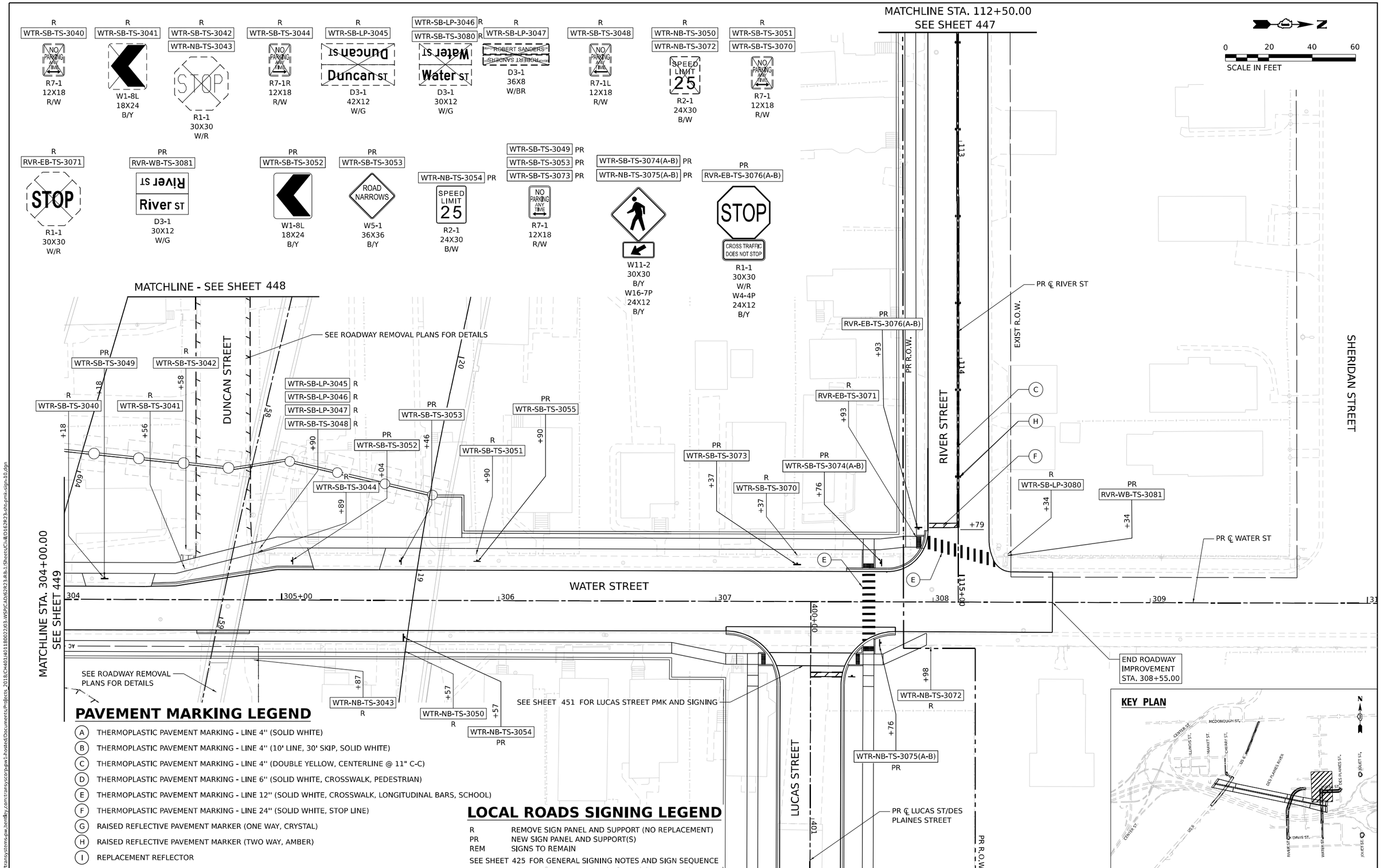

PAVEMENT MARKING LEGEND

- (A) THERMOPLASTIC PAVEMENT MARKING - LINE 4" (SOLID WHITE)
- (B) THERMOPLASTIC PAVEMENT MARKING - LINE 4" (10' LINE, 30' SKIP, SOLID WHITE)
- (C) THERMOPLASTIC PAVEMENT MARKING - LINE 4" (DOUBLE YELLOW, CENTERLINE @ 11" C-C)
- (D) THERMOPLASTIC PAVEMENT MARKING - LINE 6" (SOLID WHITE, CROSSWALK, PEDESTRIAN)
- (E) THERMOPLASTIC PAVEMENT MARKING - LINE 12" (SOLID WHITE, CROSSWALK, LONGITUDINAL BARS, SCHOOL)
- (F) THERMOPLASTIC PAVEMENT MARKING - LINE 24" (SOLID WHITE, STOP LINE)
- (G) RAISED REFLECTIVE PAVEMENT MARKER (ONE WAY, CRYSTAL)
- (H) RAISED REFLECTIVE PAVEMENT MARKER (TWO WAY, AMBER)
- (I) REPLACEMENT REFLECTOR

LOCAL ROADS SIGNING LEGEND

R	REMOVE SIGN PANEL AND SUPPORT (NO REPLACEMENT)
PR	NEW SIGN PANEL AND SUPPORT(S)
REM	SIGNS TO REMAIN

SEE SHEET 425 FOR GENERAL SIGNING NOTES AND SIGN SEQUENCE

MODEL: Default
FILE NAME: pw://transystems-pw.bentley.com:transyscorp-pw1-hosted/Documents/Projects_2018/C-M401/M401180022/03-WSP/CAD/62R23-RB-1/Sheets/Civil/D162R23-sht-pmk-sign-10.dgn

Accurate GROUP, INC.

USER NAME = jpioquinto	DESIGNED - JLS	REVISED -	
	DRAWN - JLS	REVISED -	
PLOT SCALE = 40.000 ' / in.	CHECKED - AB	REVISED -	
PLOT DATE = 11/6/2025	DATE - 11/7/2025	REVISED -	

STATE OF ILLINOIS
DEPARTMENT OF TRANSPORTATION

PAVEMENT MARKING AND SIGNING PLAN
WATER STREET

SCALE: 1" = 20' | SHEET 10 OF 13 SHEETS | STA. TO STA.

F.A.I. RTE.	SECTION	COUNTY	TOTAL SHEETS	SHEET NO.
80	FAI 80 21 STRUCTURE 2	WILL	1230	450

CONTRACT NO. 62R23

ILLINOIS | FED. AID PROJECT

SIGNING LEGEND

R REMOVE SIGN PANEL AND SUPPORT (NO REPLACEMENT)
PR NEW SIGN PANEL AND SUPPORT(S)
REM EXISTING SIGN TO REMAIN

SEE SHEET 425 FOR GENERAL SIGNING NOTES AND SIGN SEQUENCE

PR LCS-WB-TS-4000 — R1-1 30X30 W/R
PR LCS-NB-TS-4031, LCS-NB-TS-4034 — W1-8L 18X24 B/Y
PR LCS-NB-TS-4030 — W1-1L 30X30 B/Y
PR LCS-SB-TS-4033 — W1-1R 30X30 B/Y
PR LCS-NB-TS-4032, LCS-NB-TS-4035 — W1-8R 18X24 B/Y

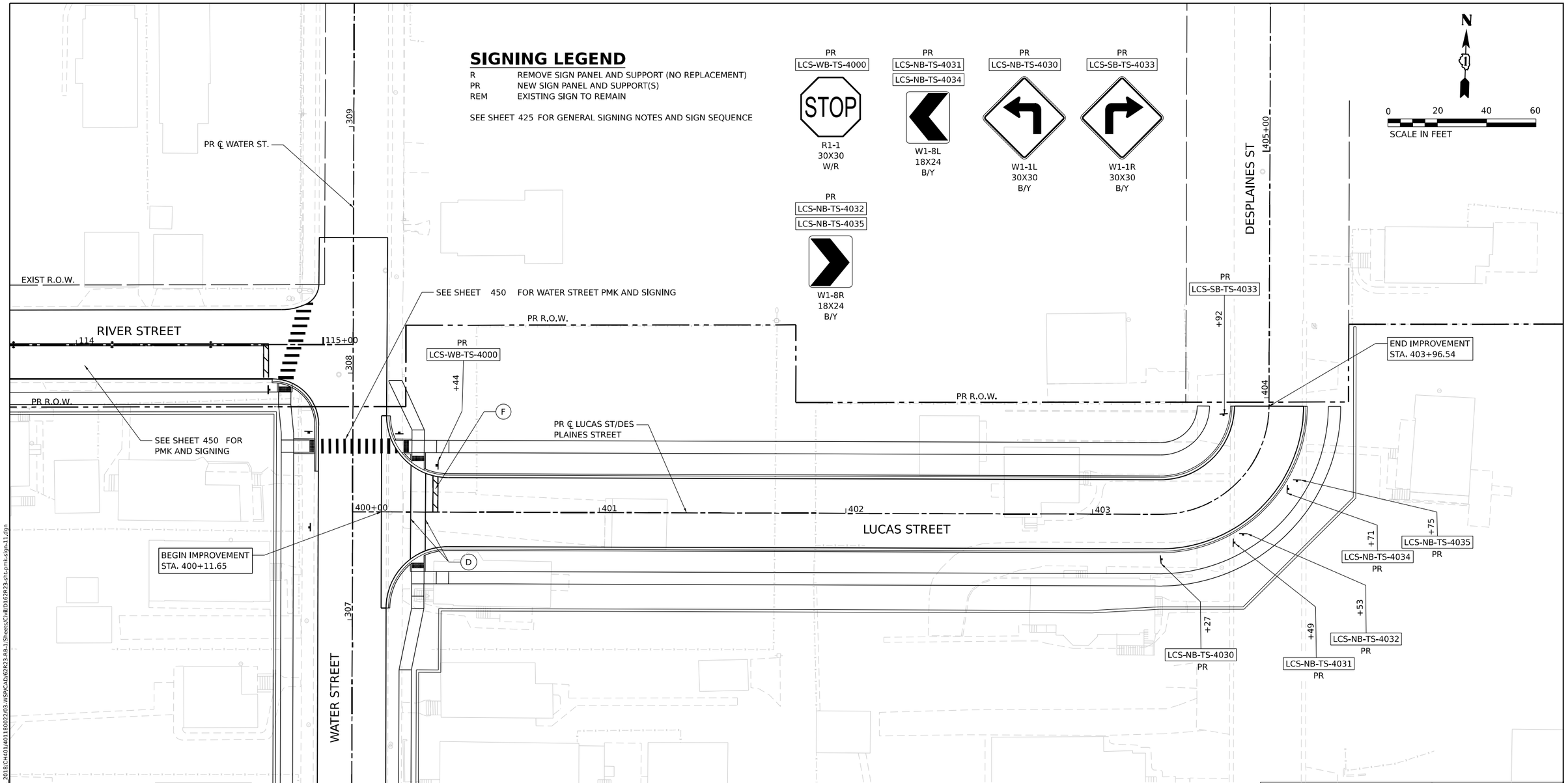

PAVEMENT MARKING LEGEND

(A) THERMOPLASTIC PAVEMENT MARKING - LINE 4" (SOLID WHITE)
(B) THERMOPLASTIC PAVEMENT MARKING - LINE 4" (10' LINE, 30' SKIP, SOLID WHITE)
(C) THERMOPLASTIC PAVEMENT MARKING - LINE 4" (DOUBLE YELLOW, CENTERLINE @ 11" C-C)
(D) THERMOPLASTIC PAVEMENT MARKING - LINE 6" (SOLID WHITE, CROSSWALK, PEDESTRIAN)
(E) THERMOPLASTIC PAVEMENT MARKING - LINE 12" (SOLID WHITE, CROSSWALK, LONGITUDINAL BARS, SCHOOL)
(F) THERMOPLASTIC PAVEMENT MARKING - LINE 24" (SOLID WHITE, STOP LINE)
(G) RAISED REFLECTIVE PAVEMENT MARKER (ONE WAY, CRYSTAL)
(H) RAISED REFLECTIVE PAVEMENT MARKER (TWO WAY, AMBER)
(I) REPLACEMENT REFLECTOR

KEY PLAN

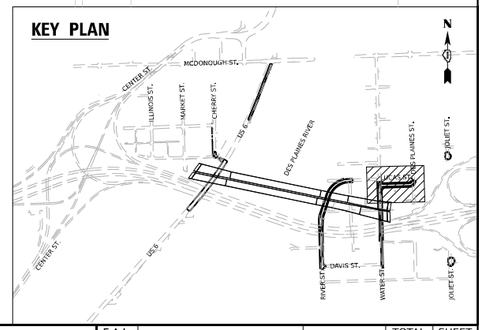

MODEL: Default
FILE NAME: pw://transystems-pw.bentley.com:transyscorp-pw1-hosted/Documents/Projects_2018/CH401/401180022/03-WSP/CAD/62R23-RB-1/Sheets/Civil/D162R23-sht-pmk-sign-11.dgn

Accurate GROUP, INC.

USER NAME = jpioquinto	DESIGNED - JLS	REVISED -
	DRAWN - JLS	REVISED -
PLOT SCALE = 40.000 ' / in.	CHECKED - AB	REVISED -
PLOT DATE = 11/6/2025	DATE - 11/7/2025	REVISED -

STATE OF ILLINOIS
DEPARTMENT OF TRANSPORTATION

PAVEMENT MARKING AND SIGNING PLAN
LUCAS STREET

SCALE: 1"=20' | SHEET 11 OF 13 SHEETS | STA. TO STA.

F.A.I. RTE.	SECTION	COUNTY	TOTAL SHEETS	SHEET NO.
80	FAI 80 21 STRUCTURE 2	WILL	1230	451
		CONTRACT NO. 62R23		
	ILLINOIS	FED. AID PROJECT		

LOCAL ROADS SIGNING LEGEND

R	REMOVE SIGN PANEL AND SUPPORT (NO REPLACEMENT)
PR	NEW SIGN PANEL AND SUPPORT(S)
REM	SIGNS TO REMAIN

SEE SHEET 425 FOR GENERAL SIGNING NOTES AND SIGN SEQUENCE

R
JLT-NB-TS-6020

W14-1
30X30
B/Y

PR
JLT-NB-TS-6000

W14-1
30X30
B/Y

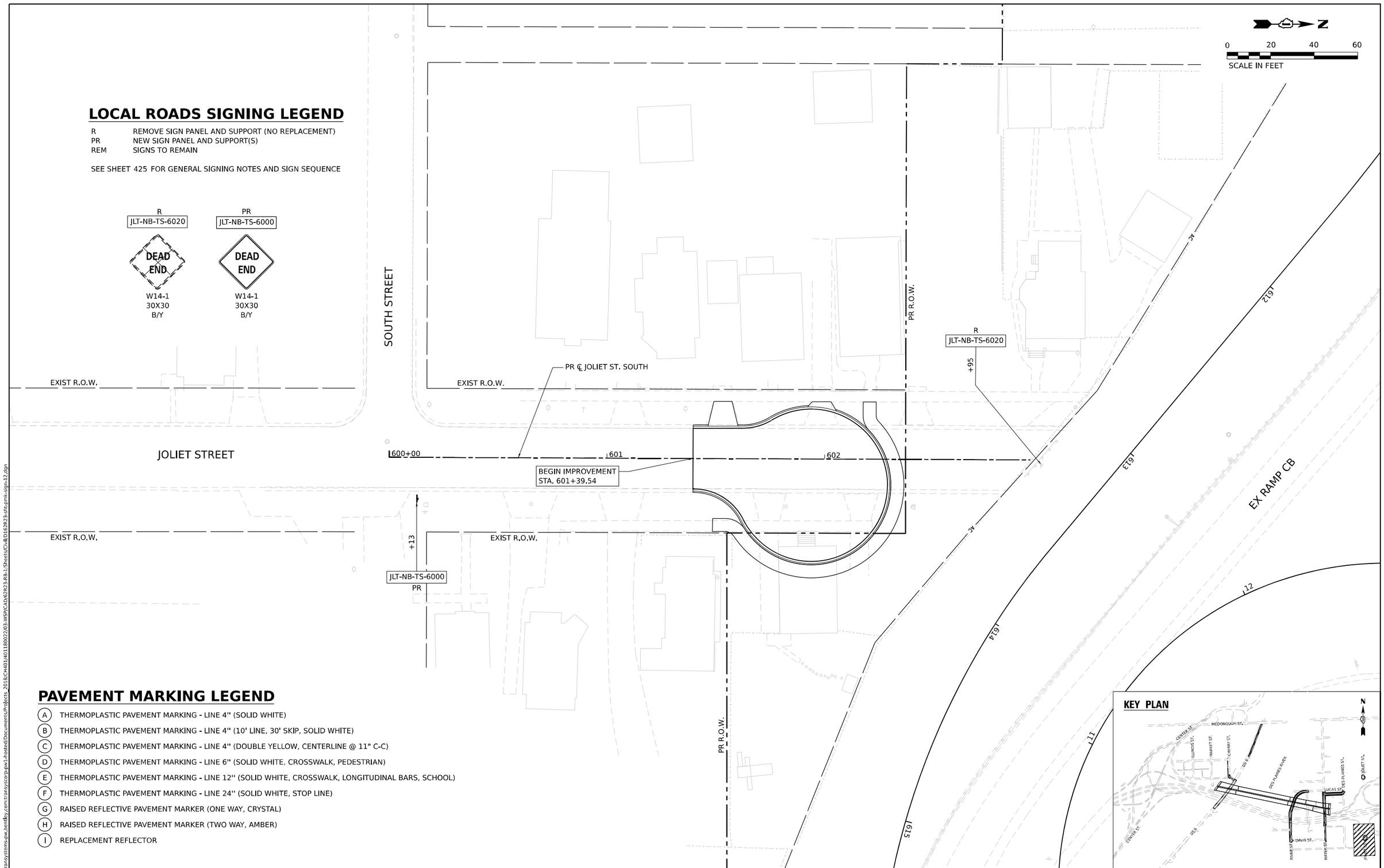

PAVEMENT MARKING LEGEND

- (A) THERMOPLASTIC PAVEMENT MARKING - LINE 4" (SOLID WHITE)
- (B) THERMOPLASTIC PAVEMENT MARKING - LINE 4" (10' LINE, 30' SKIP, SOLID WHITE)
- (C) THERMOPLASTIC PAVEMENT MARKING - LINE 4" (DOUBLE YELLOW, CENTERLINE @ 11" C-C)
- (D) THERMOPLASTIC PAVEMENT MARKING - LINE 6" (SOLID WHITE, CROSSWALK, PEDESTRIAN)
- (E) THERMOPLASTIC PAVEMENT MARKING - LINE 12" (SOLID WHITE, CROSSWALK, LONGITUDINAL BARS, SCHOOL)
- (F) THERMOPLASTIC PAVEMENT MARKING - LINE 24" (SOLID WHITE, STOP LINE)
- (G) RAISED REFLECTIVE PAVEMENT MARKER (ONE WAY, CRYSTAL)
- (H) RAISED REFLECTIVE PAVEMENT MARKER (TWO WAY, AMBER)
- (I) REPLACEMENT REFLECTOR

Accurate GROUP, INC.

USER NAME = jpioquinto	DESIGNED - JLS	REVISED -	
	DRAWN - JLS	REVISED -	
PLOT SCALE = 40.000 ' / in.	CHECKED - AB	REVISED -	
PLOT DATE = 11/5/2025	DATE - 11/7/2025	REVISED -	

STATE OF ILLINOIS
DEPARTMENT OF TRANSPORTATION

PAVEMENT MARKING AND SIGNING PLAN
JOLIET STREET – SOUTH

SCALE: 1"=20' | SHEET 12 OF 13 SHEETS | STA. | TO STA.

F.A.I. RTE.	SECTION	COUNTY	TOTAL SHEETS	SHEET NO.
80	FAI 80 21 STRUCTURE 2	WILL	1230	452
		CONTRACT NO. 62R23		
	ILLINOIS	FED. AID PROJECT		

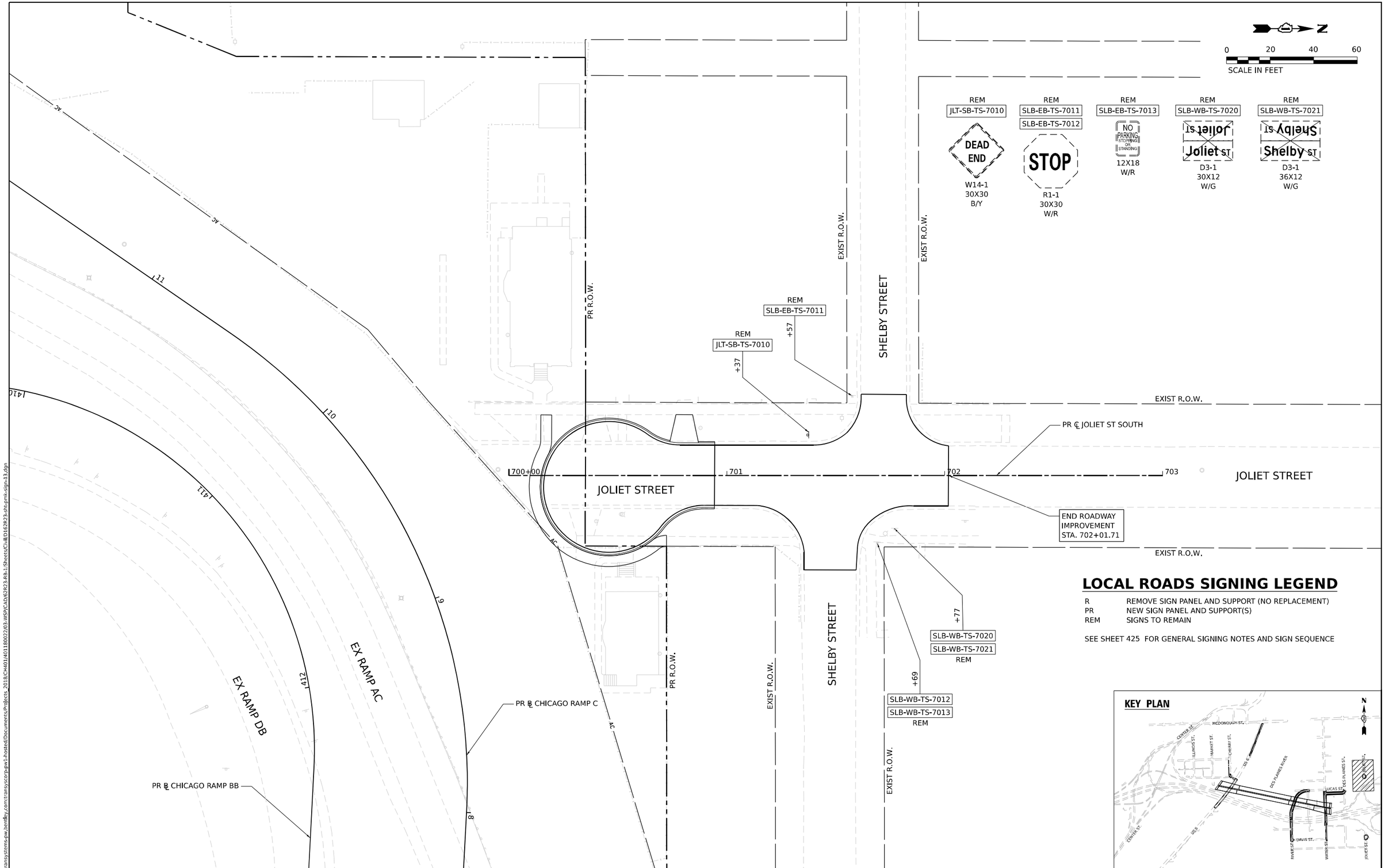

LOCAL ROADS SIGNING LEGEND

R	REMOVE SIGN PANEL AND SUPPORT (NO REPLACEMENT)
PR	NEW SIGN PANEL AND SUPPORT(S)
REM	SIGNS TO REMAIN

SEE SHEET 425 FOR GENERAL SIGNING NOTES AND SIGN SEQUENCE

MODEL: Default
FILE NAME: pw://transystems-pw.bentley.com:transyscorp-pw1-hosted/Documents/Projects_2018/CH401/401180022/03-WSP/CAD/62R23-RB-1/Sheets/Civil/0162R23-sht-pmk-sign-13.dgn

Accurate GROUP, INC.

USER NAME = jpioquinto	DESIGNED - JLS	REVISED -	
	DRAWN - JLS	REVISED -	
PLOT SCALE = 40.000 ' / in.	CHECKED - AB	REVISED -	
PLOT DATE = 11/5/2025	DATE - 11/7/2025	REVISED -	

STATE OF ILLINOIS
DEPARTMENT OF TRANSPORTATION

PAVEMENT MARKING AND SIGNING PLAN
JOLIET STREET – NORTH

SCALE: 1" = 20' | SHEET 13 OF 13 SHEETS | STA. TO STA.

F.A.I. RTE.	SECTION	COUNTY	TOTAL SHEETS	SHEET NO.
80	FAI 80 21 STRUCTURE 2	WILL	1230	453
		CONTRACT NO. 62R23		
		ILLINOIS	FED. AID PROJECT	

SIGN DETAIL
1:25

SIGN ID		EB-OS-0410	
STRUCTURE NUMBER		1S099I080R132.3	
SIZE (W x H)	EXIT PLAQUE	-	
	MAIN PANEL	11'-0" x 8'-0"	
MOUNTING / TYPE		OVERHEAD / SPAN	
MOUNTING LOCATION			
SHEETING / COLOR	BACKGROUND	TYPE:	REFLECTIVE - ZZ
		COLOR:	GREEN
		TYPE:	-
		COLOR:	-
	LEGEND / BORDER	TYPE:	REFLECTIVE - ZZ
		COLOR:	WHITE
		TYPE:	-
		COLOR:	-

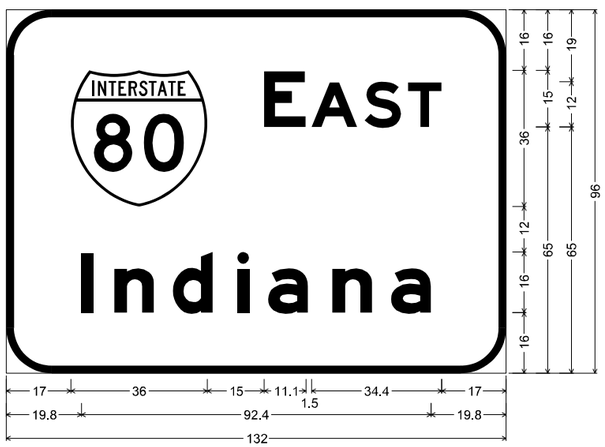

12.0" Radius, 2.0" Border, White on Green;
"EAST", E Mod 2K; "Indiana", E Mod 2K;
Table of widths and spaces

17.0	80 36.0	15.0	E 11.1	1.5	A 12.2	1.8	S 9.7	1.8	T 8.9	17.0		
19.8	I 3.2	5.5	n 10.5	5.0	d 10.6	6.4	i 3.2	4.9	a 10.6	6.4	n 10.5	5.0	a 10.6	19.8

DIMENSIONS ARE IN INCHES.TENTHS

SIGN DETAIL
1:25

SIGN ID		EB-OS-0411	
STRUCTURE NUMBER		1S099I080R132.3	
SIZE (W x H)	EXIT PLAQUE	-	
	MAIN PANEL	14'-6" x 13'-0"	
MOUNTING / TYPE		OVERHEAD / SPAN	
MOUNTING LOCATION			
SHEETING / COLOR	BACKGROUND	TYPE:	REFLECTIVE - ZZ
		COLOR:	GREEN
		TYPE:	REFLECTIVE - ZZ
		COLOR:	YELLOW
	LEGEND / BORDER	TYPE:	REFLECTIVE - ZZ
		COLOR:	WHITE
		TYPE:	REFLECTIVE - ZZ
		COLOR:	BLACK

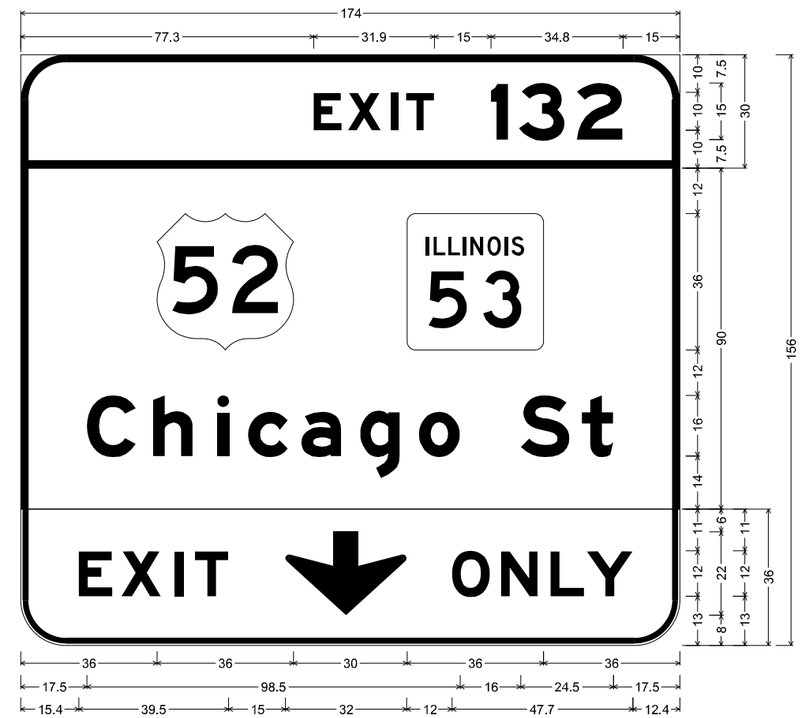

12.0" Radius, 2.0" Border, White on Green;
"EXIT", E Mod 2K 120% spacing; "132", E Mod 2K;

12.0" Radius, 2.0" Border, White on Green;
"Chicago St", E Mod 2K;

12.0" Radius, 1.5" Border, 0.5" Indent, Black on Yellow;
"EXIT", E Mod 2K 140% spacing; Down Arrow Custom - 22.0" 270°; "ONLY", E Mod 2K;
Table of widths and spaces

77.3	E 7.4	1.7	X 8.7	2.5	I 2.0	2.2	T 7.4	15.0	1 4.5	2.8	3 12.2	3.2	2 12.1	15.0
36.0	52 36.0	30.0	53 36.0	36.0										
17.5	C 12.9	4.5	h 10.6	6.4	i 3.2	4.9	c 10.6	3.5	a 10.6	4.9	g 10.6	5.0	o 10.8	16.0	S 13.0	3.2	t 8.3	17.5
15.4	E 8.8	2.4	X 10.4	3.6	I 2.4	3.0	T 8.9	15.0	↓ 32.0	12.0	O 10.1	2.8	N 9.8	3.3	L 8.9	0.7	Y 12.1	12.4

DIMENSIONS ARE IN INCHES.TENTHS

MODEL: Sheet 1
FILE NAME: pw://transystems-pw.bentley.com:transyscorp-pw1-hosted/Documents/Projects_2018/CH401/401180022/03-WSP/CAD/62R23-RB-1/Sheets/CivilD162R23-sht-sign-details.dgn

Accurate GROUP, INC.

USER NAME = jpioquinto	DESIGNED - JLS	REVISED -	
	DRAWN - JLS	REVISED -	
PLOT SCALE = 100.000 ' / in.	CHECKED - AB	REVISED -	
PLOT DATE = 11/5/2025	DATE - 11/7/2025	REVISED -	

STATE OF ILLINOIS
DEPARTMENT OF TRANSPORTATION

SIGN PANEL DETAILS
I-80

SCALE: 1" = 50' | SHEET 1 OF 5 SHEETS | STA. | TO STA.

F.A.I. RTE.	SECTION	COUNTY	TOTAL SHEETS	SHEET NO.
80	FAI 80 21 STRUCTURE 2	WILL	1230	454
		CONTRACT NO. 62R23		
		ILLINOIS	FED. AID PROJECT	

SIGN DETAIL
1:25

SIGN ID		WB-OS-0420	
STRUCTURE NUMBER		1S099I080L132.3	
SIZE (W x H)	EXIT PLAQUE	-	
	MAIN PANEL	11'-0" x 8'-0"	
MOUNTING / TYPE		OVERHEAD / SPAN	
MOUNTING LOCATION			
SHEETING / COLOR	BACKGROUND	TYPE:	REFLECTIVE - ZZ
		COLOR:	GREEN
		TYPE:	-
		COLOR:	-
	LEGEND / BORDER	TYPE:	REFLECTIVE - ZZ
		COLOR:	WHITE
		TYPE:	-
		COLOR:	-

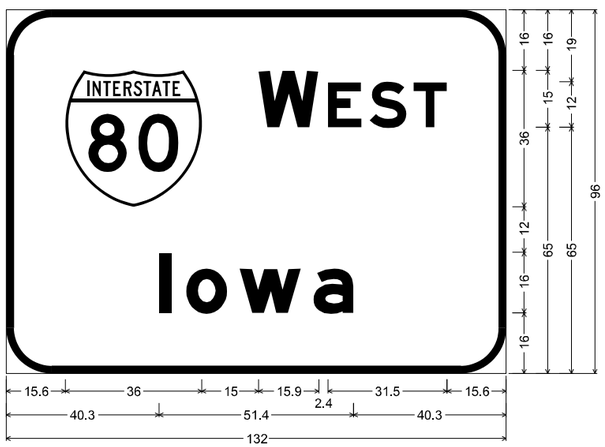

12.0" Radius, 2.0" Border, White on Green;
"WEST", E Mod 2K; "Iowa", E Mod 2K;
Table of widths and spaces

15.6	80 36.0	15.0	W 15.9	2.4	E 8.9	2.2	S 9.7	1.8	T 8.9	15.6

40.3	I 3.2	4.0	o 10.9	3.2	w 16.3	3.2	a 10.6	40.3

DIMENSIONS ARE IN INCHES.TENTHS

SIGN DETAIL
1:25

SIGN ID		WB-OS-0421	
STRUCTURE NUMBER		1S099I080L132.3	
SIZE (W x H)	EXIT PLAQUE	-	
	MAIN PANEL	14'-6" x 12'-6"	
MOUNTING / TYPE		OVERHEAD / SPAN	
MOUNTING LOCATION			
SHEETING / COLOR	BACKGROUND	TYPE:	REFLECTIVE - ZZ
		COLOR:	GREEN
		TYPE:	-
		COLOR:	-
	LEGEND / BORDER	TYPE:	REFLECTIVE - ZZ
		COLOR:	WHITE
		TYPE:	-
		COLOR:	-

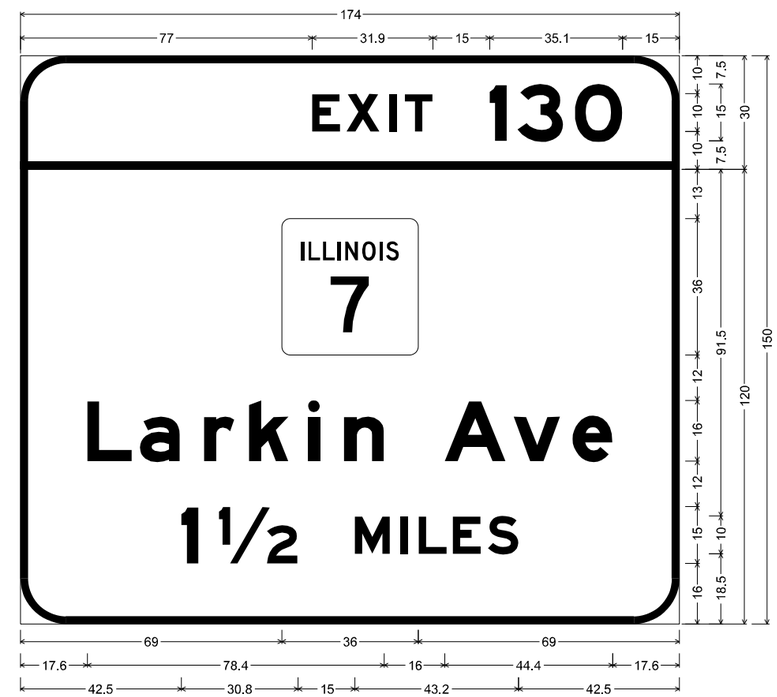

12.0" Radius, 2.0" Border, White on Green;
"EXIT", E Mod 2K 120% spacing; "130", E Mod 2K;

12.0" Radius, 2.0" Border, White on Green;
"Larkin Ave", E Mod 2K; "1½ MILES", E Mod 2K;
Table of widths and spaces

77.0	E 7.4	1.7	X 8.7	2.5	I 2.0	2.2	T 7.4	15.0	1 4.5	2.8	3 12.2	3.0	0 12.6	15.0

69.0	7 36.0	69.0

17.6	L 11.9	2.1	a 10.5	6.4	r 8.0	3.9	k 10.5	5.0	i 3.2	6.4	n 10.5	16.0	A 16.2	2.1	v 12.3	3.2	e 10.6	17.6

42.5	1 4.5	5.4	½ 20.9	15.0	M 9.3	2.8	I 2.0	2.8	L 7.4	1.6	E 7.4	1.8	S 8.1	42.5

DIMENSIONS ARE IN INCHES.TENTHS

MODEL: Sheet 2
FILE NAME: pw://transystems-pw.bentley.com:transyscorp-pw1-hosted/Documents/Projects_2018/CH401/401180022/03-WSP/CAD/62R23-RB-1/Sheets/Civil/D162R23-sht-dgn-details.dgn

Accurate GROUP, INC.

USER NAME = jploquinto	DESIGNED - JLS	REVISED -	
	DRAWN - JLS	REVISED -	
PLOT SCALE = 100.000 ' / in.	CHECKED - AB	REVISED -	
PLOT DATE = 11/5/2025	DATE - 11/7/2025	REVISED -	

STATE OF ILLINOIS
DEPARTMENT OF TRANSPORTATION

SIGN PANEL DETAILS
I-80

SCALE: 1" = 50' | SHEET 2 OF 5 SHEETS | STA. | TO STA.

F.A.I. RTE.	SECTION	COUNTY	TOTAL SHEETS	SHEET NO.
80	FAI 80 21 STRUCTURE 2	WILL	1230	455
		CONTRACT NO. 62R23		
		ILLINOIS	FED. AID PROJECT	

SIGN DETAIL
1:25

SIGN ID			WB-OS-0422
STRUCTURE NUMBER			1S099I080L132.3
SIZE (W x H)	EXIT PLAQUE		-
	MAIN PANEL		15'-6" x 11'-6"
MOUNTING / TYPE			OVERHEAD / SPAN
MOUNTING LOCATION			
SHEETING / COLOR	BACKGROUND	TYPE:	REFLECTIVE - ZZ
		COLOR:	GREEN
		TYPE:	REFLECTIVE - ZZ
		COLOR:	YELLOW
	LEGEND / BORDER	TYPE:	REFLECTIVE - ZZ
		COLOR:	WHITE
		TYPE:	REFLECTIVE - ZZ
		COLOR:	BLACK

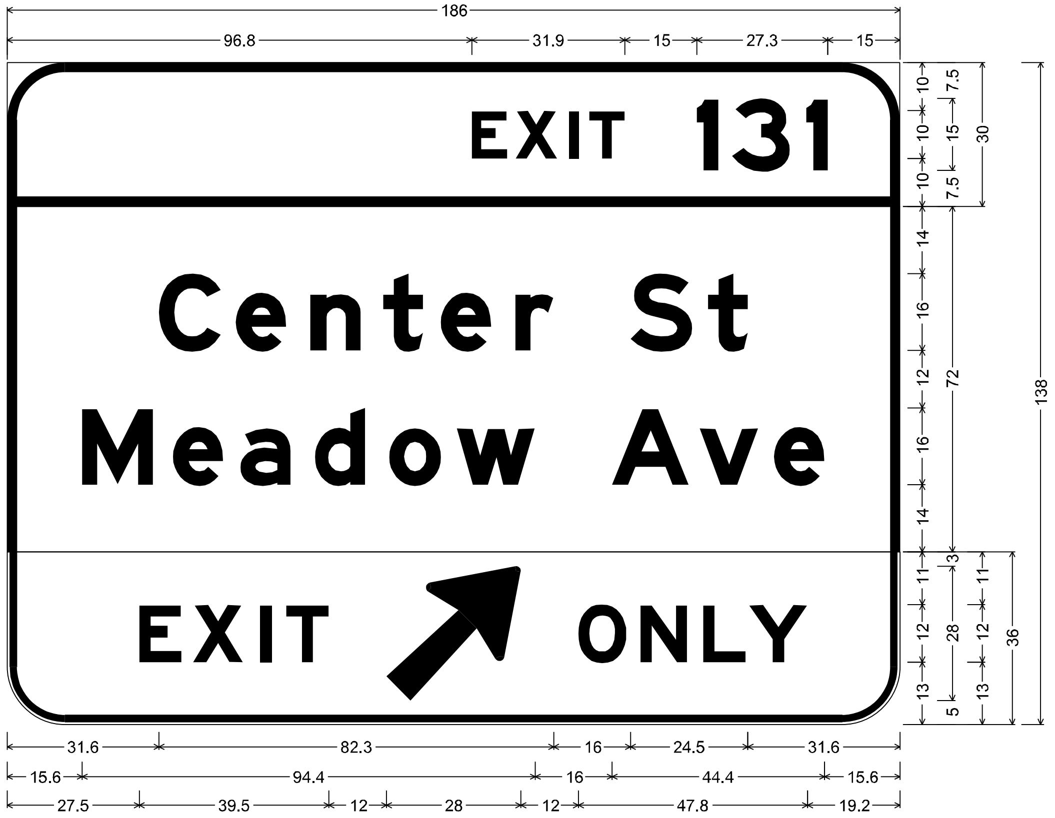

12.0" Radius, 2.0" Border, White on Green;
"EXIT", E Mod 2K 120% spacing; "131", E Mod 2K;

12.0" Radius, 2.0" Border, White on Green;
"Center St", E Mod 2K; "Meadow Ave", E Mod 2K;

12.0" Radius, 1.5" Border, 0.5" Indent, Black on Yellow;
"EXIT", E Mod 2K 140% spacing; Arrow Custom - 35.6" 45°; "ONLY", E Mod 2K;
Table of widths and spaces

	E		X		I		T		1		3		1	
96.8	7.4	1.7	8.7	2.5	2.0	2.2	7.4	15.0	4.5	2.8	12.2	3.3	4.5	15.0

	C		e		n		t		e		r		S		t	
31.6	13.0	3.0	10.6	5.0	10.5	4.7	8.3	3.7	10.5	5.0	8.0	16.0	12.9	3.2	8.4	31.6

	M		e		a		d		o		w		A		v		e	
15.6	14.9	4.0	10.6	3.5	10.6	4.9	10.6	4.9	10.9	3.2	16.3	16.0	16.2	2.1	12.3	3.2	10.6	15.6

	E		X		I		T		↗		O		N		L		Y	
27.5	8.9	2.3	10.5	3.5	2.4	3.0	8.9	12.0	28.0	12.0	10.1	2.9	9.7	3.4	8.8	0.8	12.1	19.2

DIMENSIONS ARE IN INCHES.TENTHS

SIGN DETAIL
1:25

SIGN ID			WB-OC-0520
STRUCTURE NUMBER			1C099I080L132.5
SIZE (W x H)	EXIT PLAQUE		-
	MAIN PANEL		15'-6" x 11'-6"
MOUNTING / TYPE			OVERHEAD / CANTILEVER
MOUNTING LOCATION			
SHEETING / COLOR	BACKGROUND	TYPE:	REFLECTIVE - ZZ
		COLOR:	GREEN
		TYPE:	REFLECTIVE - ZZ
		COLOR:	YELLOW
	LEGEND / BORDER	TYPE:	REFLECTIVE - ZZ
		COLOR:	WHITE
		TYPE:	REFLECTIVE - ZZ
		COLOR:	BLACK

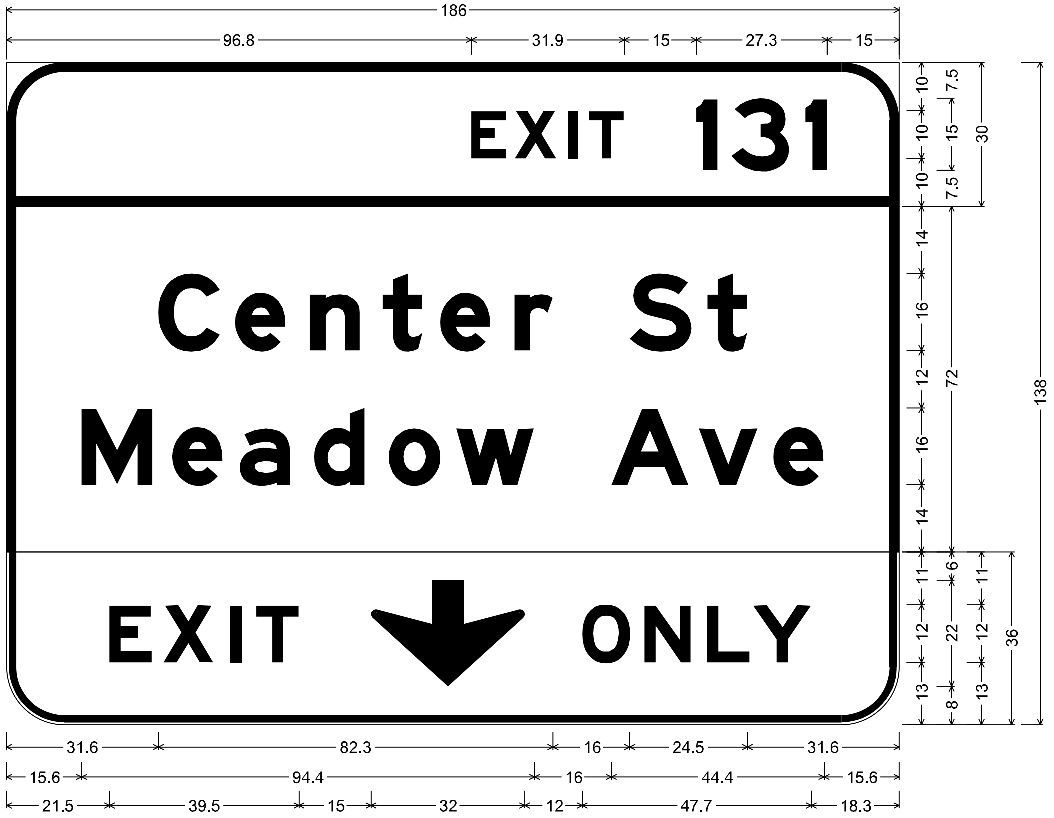

12.0" Radius, 2.0" Border, White on Green;
"EXIT", E Mod 2K 120% spacing; "131", E Mod 2K;

12.0" Radius, 2.0" Border, White on Green;
"Center St", E Mod 2K; "Meadow Ave", E Mod 2K;

12.0" Radius, 1.5" Border, 0.5" Indent, Black on Yellow;
"EXIT", E Mod 2K 140% spacing; Down Arrow 22.0" 270°; "ONLY", E Mod 2K;
Table of widths and spaces

	E		X		I		T		1		3		1	
96.8	7.4	1.7	8.7	2.5	2.0	2.2	7.4	15.0	4.5	2.8	12.2	3.3	4.5	15.0

	C		e		n		t		e		r		S		t	
31.6	13.0	3.0	10.6	5.0	10.5	4.7	8.3	3.7	10.5	5.0	8.0	16.0	12.9	3.2	8.4	31.6

	M		e		a		d		o		w		A		v		e	
15.6	14.9	4.0	10.6	3.5	10.6	4.9	10.6	4.9	10.9	3.2	16.3	16.0	16.2	2.1	12.3	3.2	10.6	15.6

	E		X		I		T		↓		O		N		L		Y	
21.5	8.8	2.4	10.4	3.6	2.4	3.0	8.9	15.0	32.0	12.0	10.1	2.8	9.8	3.3	8.9	0.7	12.1	18.3

DIMENSIONS ARE IN INCHES.TENTHS

MODEL: Sheet 3
FILE NAME: pw://transystems-pw.bentley.com:transyscorp-pw1-hosted/Documents/Projects_2018/CH401/401180022/03-WSP/CAD/62R23-RB-1/Sheets/Civil/D162R23-sht-sign-details.dgn

Accurate
GROUP, INC.

USER NAME = jpioquinto	DESIGNED - JLS	REVISED -	
	DRAWN - JLS	REVISED -	
PLOT SCALE = 100.000 ' / in.	CHECKED - AB	REVISED -	
PLOT DATE = 11/5/2025	DATE - 11/7/2025	REVISED -	

STATE OF ILLINOIS
DEPARTMENT OF TRANSPORTATION

SIGN PANEL DETAILS
I–80

SCALE: 1" = 50' | SHEET 3 OF 5 SHEETS | STA. | TO STA.

F.A.I. RTE.	SECTION	COUNTY	TOTAL SHEETS	SHEET NO.
80	FAI 80 21 STRUCTURE 2	WILL	1230	456
		CONTRACT NO. 62R23		
	ILLINOIS	FED. AID PROJECT		

SIGN DETAIL
1:25

SIGN ID		EB-OS-0560	
STRUCTURE NUMBER		1S099I080R132.6	
SIZE (W x H)	EXIT PLAQUE	-	
	MAIN PANEL	15'-0" x 8'-6"	
MOUNTING / TYPE		OVERHEAD / SPAN	
MOUNTING LOCATION			
SHEETING / COLOR	BACKGROUND	TYPE:	REFLECTIVE - ZZ
		COLOR:	GREEN
		TYPE:	-
		COLOR:	-
	LEGEND / BORDER	TYPE:	REFLECTIVE - ZZ
		COLOR:	WHITE
		TYPE:	-
		COLOR:	-

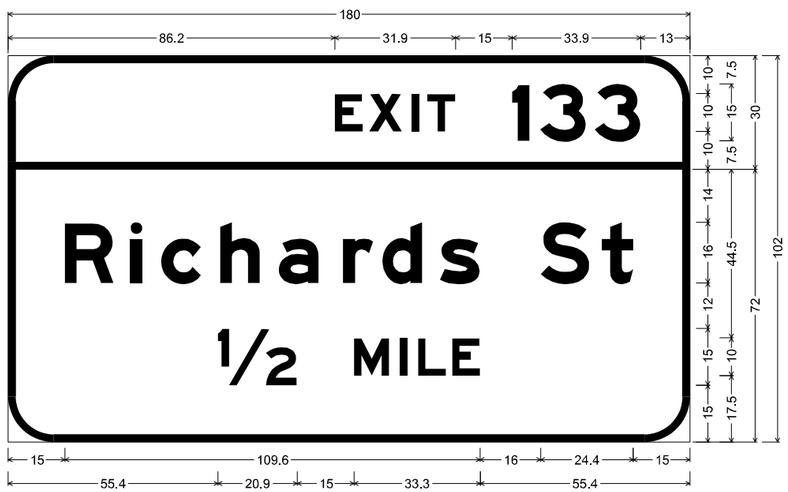

12.0" Radius, 2.0" Border, White on Green;
"EXIT", E Mod 2K 120% spacing; "133", E Mod 2K;

12.0" Radius, 2.0" Border, White on Green;
"Richards St", E Mod 2K; "½ MILE", E Mod 2K;
Table of widths and spaces

86.2	E 7.4	1.7	X 8.7	2.5	I 2.0	2.2	T 7.4	15.0	I 4.5	2.8	3 12.2	2.3	3 12.1	13.0													
15.0	R 12.9	4.3	i 3.2	5.0	c 10.6	4.9	h 10.6	4.9	a 10.6	6.4	r 8.0	2.4	d 10.6	4.6	s 10.6	16.0	S 12.9	3.2	t 8.3	15.0							
55.4	½ 20.9	15.0	M 9.3	2.8	I 2.0	2.8	L 7.4	1.6	E 7.4	55.4																	

DIMENSIONS ARE IN INCHES.TENTHS

SIGN DETAIL
1:25

SIGN ID		EB-OS-0561	
STRUCTURE NUMBER		1S099I080R132.6	
SIZE (W x H)	EXIT PLAQUE	-	
	MAIN PANEL	18'-6" x 13'-6"	
MOUNTING / TYPE		OVERHEAD / SPAN	
MOUNTING LOCATION			
SHEETING / COLOR	BACKGROUND	TYPE:	REFLECTIVE - ZZ
		COLOR:	GREEN
		TYPE:	REFLECTIVE - ZZ
		COLOR:	YELLOW
	LEGEND / BORDER	TYPE:	REFLECTIVE - ZZ
		COLOR:	WHITE
		TYPE:	REFLECTIVE - ZZ
		COLOR:	BLACK

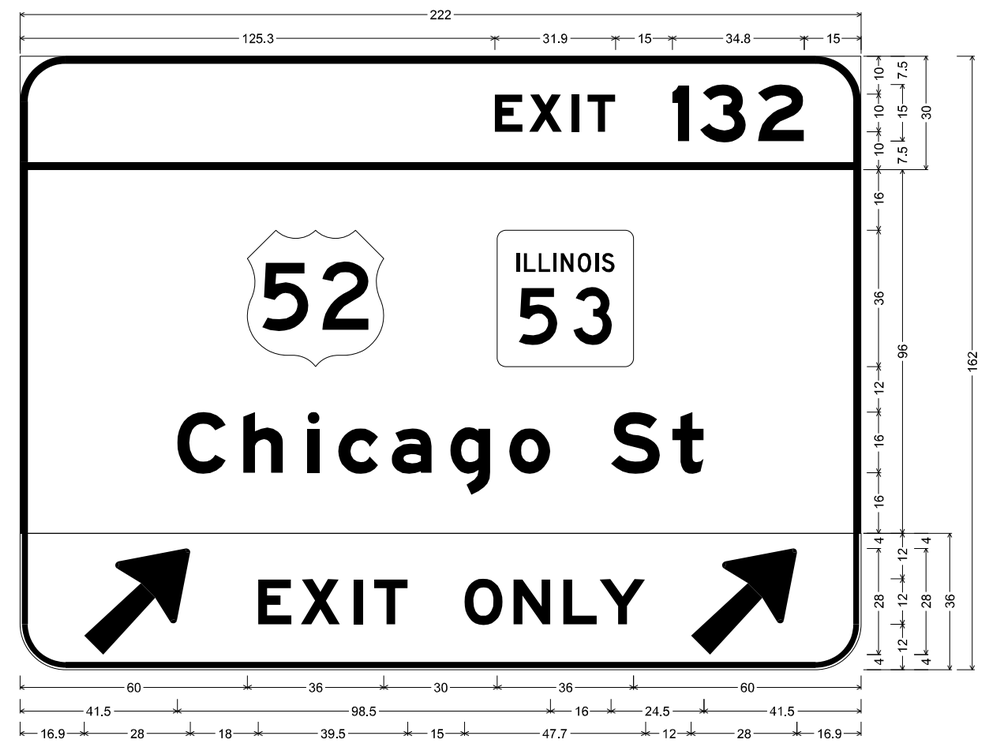

12.0" Radius, 2.0" Border, White on Green;
"EXIT", E Mod 2K 120% spacing; "132", E Mod 2K;

12.0" Radius, 2.0" Border, White on Green;
"Chicago St", E Mod 2K;

12.0" Radius, 1.5" Border, 0.5" Indent, Black on Yellow;
Arrow Custom - 35.6" 45°; "EXIT", E Mod 2K 140% spacing; "ONLY", E Mod 2K; Arrow Custom - 35.6" 45°;
Table of letter and object lefts

E 125.3	X 134.4	I 145.6	T 149.8	I 172.2	3 179.6	2 194.9
52 60.0	53 126.0					
C 41.5	h 58.9	i 75.9	c 84.0	a 98.1	g 113.6	o 129.2	S 156.0	t 172.2
↗ 16.9	E 62.9	X 74.1	I 88.1	T 93.5	O 117.4	N 130.3	L 143.4	Y 153.0	↗ 177.1

DIMENSIONS ARE IN INCHES.TENTHS

MODEL: Sheet 4
FILE NAME: pw://transystems-pw.bentley.com:transyscorp-pw1-hosted/Documents/Projects_2018/CH401/401180022/03-WSP/CAD/62R23-RB-1/Sheets/CivilD162R23-sht-sign-details.dgn

Accurate GROUP, INC.

USER NAME = jpioquinto	DESIGNED - JLS	REVISED -
	DRAWN - JLS	REVISED -
PLOT SCALE = 100.000 ' / in.	CHECKED - AB	REVISED -
PLOT DATE = 11/5/2025	DATE - 11/7/2025	REVISED -

STATE OF ILLINOIS
DEPARTMENT OF TRANSPORTATION

SIGN PANEL DETAILS
I-80

SCALE: 1" = 50' | SHEET 4 OF 5 SHEETS | STA. | TO STA.

F.A.I. RTE.	SECTION	COUNTY	TOTAL SHEETS	SHEET NO.
80	FAI 80 21 STRUCTURE 2	WILL	1230	457
		CONTRACT NO. 62R23		
	ILLINOIS	FED. AID PROJECT		

SIGN DETAIL

1:10

SIGN ID		WB-WP-0590	
STRUCTURE NUMBER		-	
SIZE (W x H)	EXIT PLAQUE	-	
	MAIN PANEL	6'-6" x 3'-0"	
MOUNTING / TYPE		GROUND / WOOD POST	
MOUNTING LOCATION			
SHEETING / COLOR	BACKGROUND	TYPE:	REFLECTIVE - AP
		COLOR:	GREEN
		TYPE:	-
		COLOR:	-
	LEGEND / BORDER	TYPE:	REFLECTIVE - AP
		COLOR:	WHITE
		TYPE:	-
		COLOR:	-

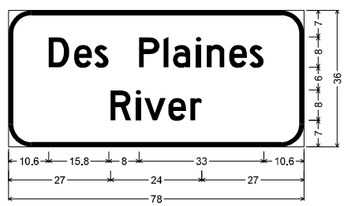

6.0" Radius, 1.3" Border, White on Green;
"Des Plaines", D 2K; "River", D 2K;
Table of widths and spaces

10.6	D 5.4	1.3	e 4.7	0.7	s 3.7												
	8.0	P 5.5	1.0	l 1.3	1.2	a 4.6	1.5	l 1.3	1.6	n 4.7	1.2	e 4.7	0.6	s 3.8	10.6		
27.0	R 5.4	1.2	i 1.3	0.9	v 5.7	0.7	e 4.7	1.1	r 3.0	27.0							

DIMENSIONS ARE IN INCHES.TENTHS

MODEL: Sheet 5
FILE NAME: pw://transystems-pw.bentley.com:transyscorp-pw1-hosted/Documents/Projects_2018/CH401/401180022/03-WSP/CAD/62R23-RB-1/Sheets/CivIll/D162R23-sht-sdpi-details.dgn

Accurate GROUP, INC.

USER NAME = jpioquinto	DESIGNED - JLS	REVISED -	
	DRAWN - JLS	REVISED -	
PLOT SCALE = 100.000 ' / in.	CHECKED - AB	REVISED -	
PLOT DATE = 11/5/2025	DATE - 11/7/2025	REVISED -	

STATE OF ILLINOIS
DEPARTMENT OF TRANSPORTATION

SIGN PANEL DETAILS
I–80

SCALE: 1" = 50' | SHEET 5 OF 5 SHEETS | STA. | TO STA.

F.A.I. RTE.	SECTION	COUNTY	TOTAL SHEETS	SHEET NO.
80	FAI 80 21 STRUCTURE 2	WILL	1230	458
		CONTRACT NO. 62R23		
		ILLINOIS	FED. AID PROJECT	

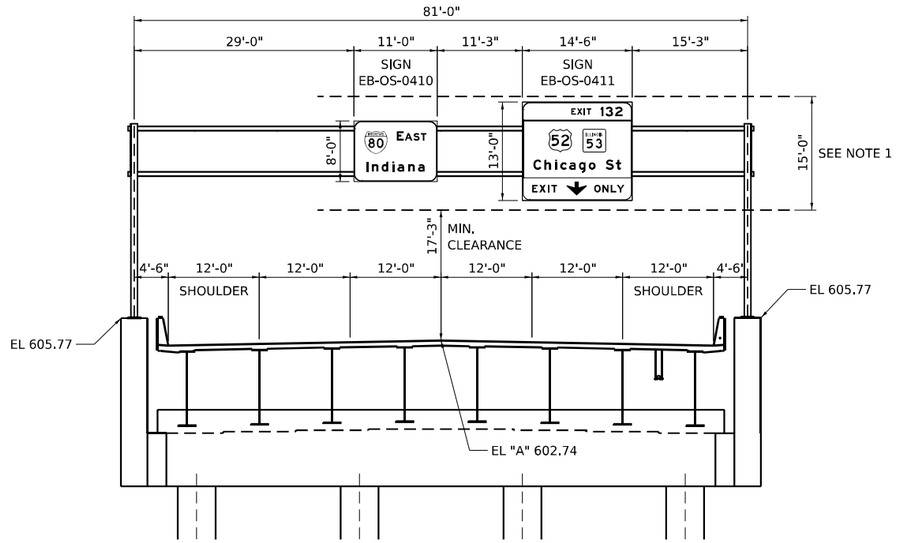

STRUCTURE 1S099I080R132.3
MOUNTING DETAIL
PROPOSED OVERHEAD SIGN STRUCTURE - SPAN
EB I-80, STA. 41+68
(LOOKING EAST)

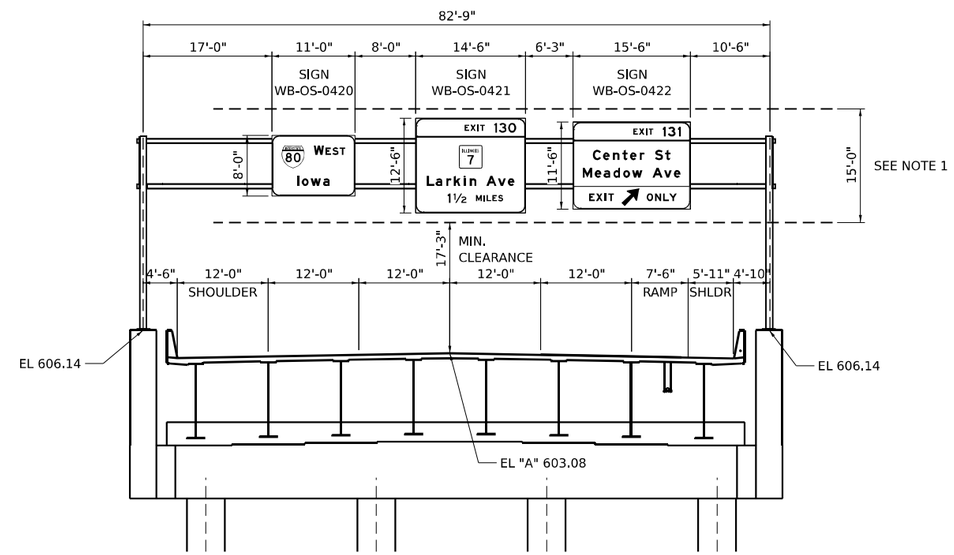

STRUCTURE 1S099I080L132.3
MOUNTING DETAIL
PROPOSED OVERHEAD SIGN STRUCTURE - SPAN
WB I-80, STA. 42+01
(LOOKING WEST)

NOTES

1. THEORETCIAL MINIMUM SIGN DESIGN HEIGHT.
2. REFER TO STRUCTURAL BASE SHEETS FOR ADDITIONAL INFORMATION.
3. THE LANE WIDTHS ON THESE PLANS ARE SHOWN FOR ULTIMATE LANE CONFIGURATION. SEE SIGNING PLANS FOR LANE CONFIGURATION. THIS CONTRACT IS ANTICIPATED TO OVERLAP WITH ADJACENT CONTRACTS BOTH ON THE EAST AND WEST SIDE. FINAL STRIPING ALONG I-80 IS NOT PART OF THIS CONTRACT. SEE ADJACENT CONTRACT 62F94 FOR FINAL PAVEMENT MARKINS WITHIN THIS CONTRACT LIMIT.

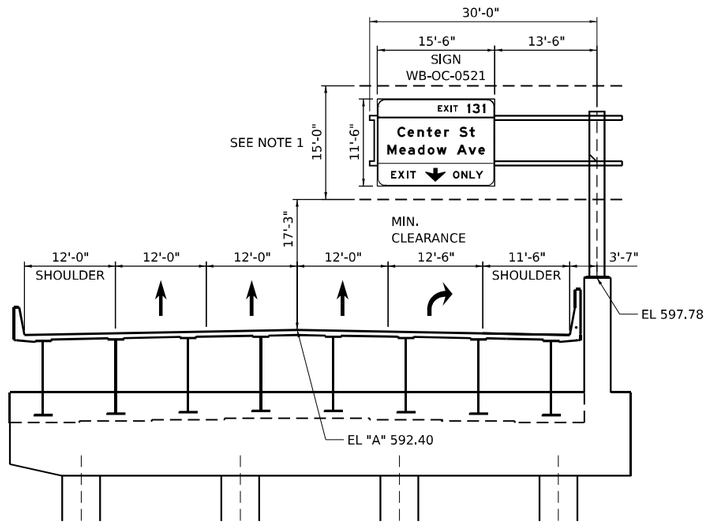

STRUCTURE 1C099I080L132.5
MOUNTING DETAIL
PROPOSED OVERHEAD SIGN STRUCTURE - CANTILEVER
WB I-80, STA. 52+10
(LOOKING WEST)

NOTES

1. THEORETCIAL MINIMUM SIGN DESIGN HEIGHT.
2. REFER TO STRUCTURAL BASE SHEETS FOR ADDITIONAL INFORMATION.
3. THE LANE WIDTHS ON THESE PLANS ARE SHOWN FOR ULTIMATE LANE CONFIGURATION. SEE SIGNING PLANS FOR LANE CONFIGURATION. THIS CONTRACT IS ANTICIPATED TO OVERLAP WITH ADJACENT CONTRACTS BOTH ON THE EAST AND WEST SIDE. FINAL STRIPING ALONG I-80 IS NOT PART OF THIS CONTRACT. SEE ADJACENT CONTRACT 62F94 FOR FINAL PAVEMENT MARKINS WITHIN THIS CONTRACT LIMIT.

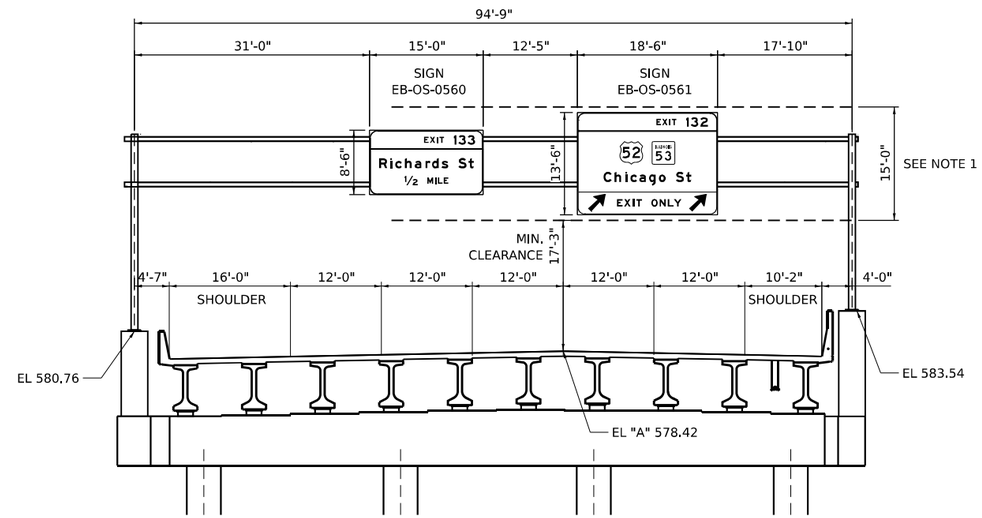

STRUCTURE 1S099I080R132.6
MOUNTING DETAIL
PROPOSED OVERHEAD SIGN STRUCTURE - SPAN
EB I-80, STA. 56+82
(LOOKING EAST)

MODEL: Default
FILE NAME: pw://transystems-pw.bentley.com:transyscorp-pw1-hosted/Documents/Projects_2018/CH401/401180022/03-WSP/CAD/62R23-RB-1/Sheets/Cwll0162R23-sht-sign-mounting-02.dgn

Accurate GROUP, INC.

USER NAME = jpioquinto	DESIGNED - JLS	REVISED -	
	DRAWN - JLS	REVISED -	
PLOT SCALE = 20.000 ' / in.	CHECKED - AB	REVISED -	
PLOT DATE = 11/6/2025	DATE - 11/7/2025	REVISED -	

STATE OF ILLINOIS
DEPARTMENT OF TRANSPORTATION

SIGN MOUNTING DETAILS
I-80

SCALE: 1" = 10' | SHEET 2 OF 2 SHEETS | STA. TO STA.

F.A.I. RTE.	SECTION	COUNTY	TOTAL SHEETS	SHEET NO.
80	FAI 80 21 STRUCTURE 2	WILL	1230	460
		CONTRACT NO. 62R23		
		ILLINOIS	FED. AID PROJECT	

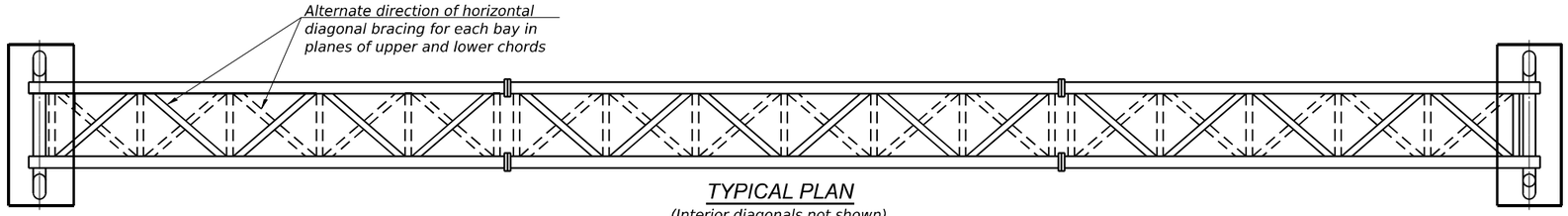

TYPICAL PLAN

(Interior diagonals not shown)

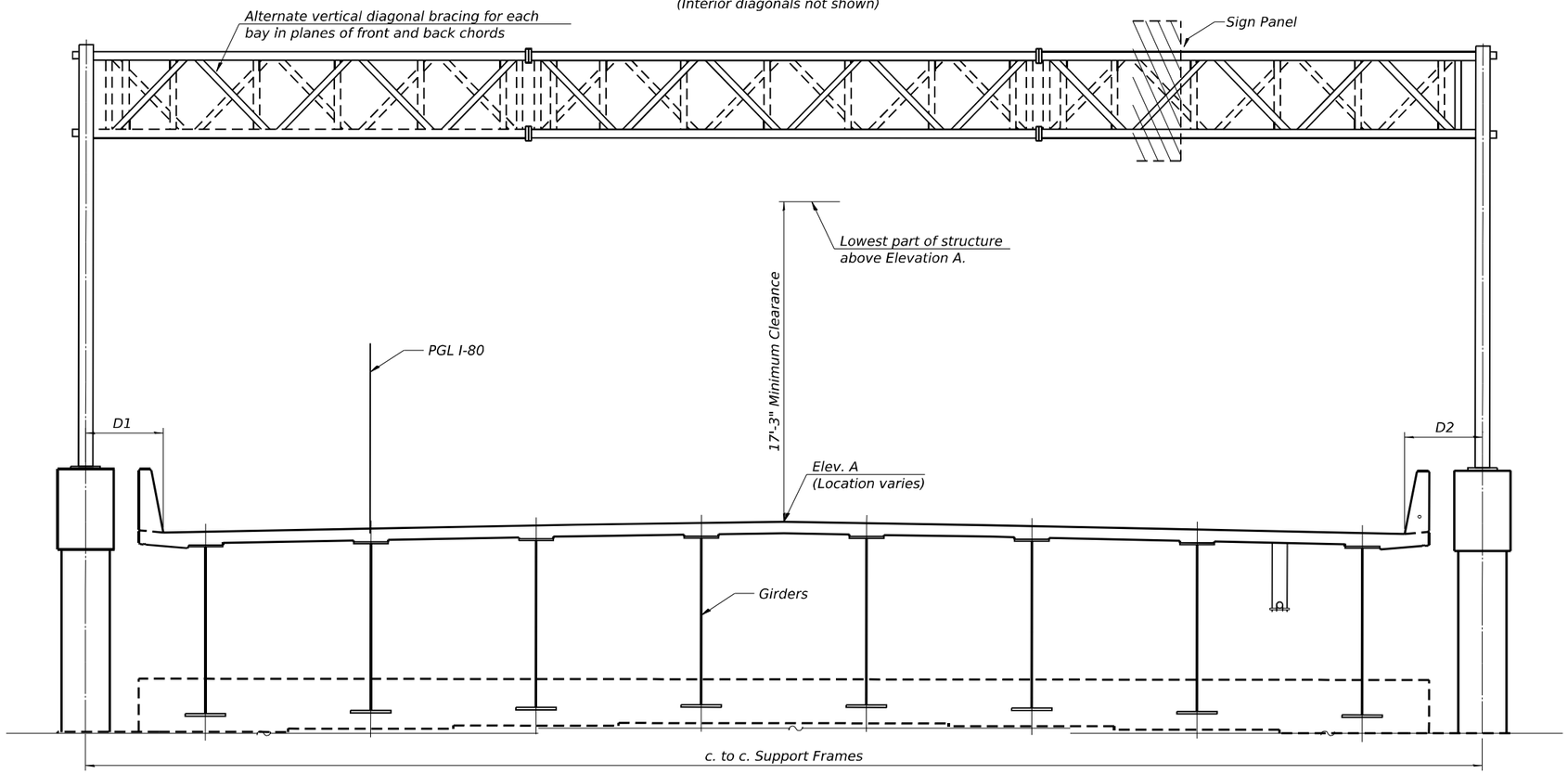

TYPICAL ELEVATION

(Looking at Face of Signs**)

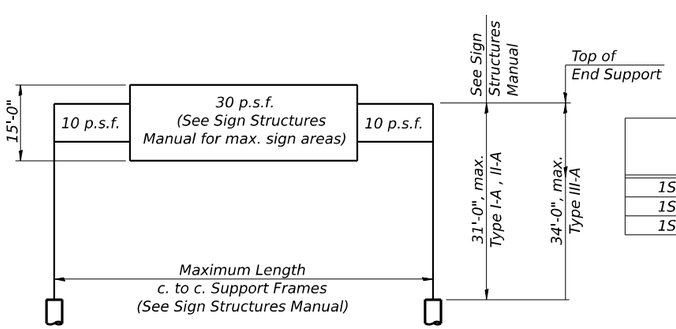

DESIGN WIND LOADING DIAGRAM

Parameters shown are basis for I.D.O.T. Standards and Sign Manual Tables. Installations not within dimensional limits shown require special analysis for all components.

Structure Number	Station	Design Truss Type	c. to c. Supports	Elev. A	D1	D2	Height of Tallest Sign	Total Sign Area
1S099I080R132.3	41+68	II-A	81'-0"	602.74	4'-6"	4'-6"	156"	277 Sq. Ft.
1S099I080L132.3	42+01	II-A	82'-9"	603.08	4'-6"	4'-9⅝"	150"	452 Sq. Ft.
1S099I080R132.6	56+82	II-A	94'-9"	578.42	4'-6½"	4'-0"	162"	373 Sq. Ft.

GENERAL NOTES

DESIGN: AASHTO Standard Specifications for Structural Supports for Highway Signs, Luminaires and Traffic Signals. ("AASHTO Specifications")

CONSTRUCTION: Current (at time of letting) Illinois Department of Transportation Standard Specifications for Road and Bridge Construction, Supplemental Specifications and Special Provisions. ("Standard Specifications")

LOADING: 90 M.P.H. WIND VELOCITY

WALKWAY LOADING: Dead load plus 500 lbs. concentrated live load.

DESIGN STRESSES:
Field Units
f'c = 3,500 p.s.i.
fy = 60,000 p.s.i. (reinforcement)

WELDING: All welds to be continuous unless otherwise shown. All welding to be done in accordance with current AWS D1.1 and D1.2 Structural Welding Codes (Steel and Aluminum) and the Standard Specificiations.

MATERIALS: Aluminum Alloys as shown throughout plans. All Structural Steel Pipe shall be ASTM A53 Grade B or A500 Grade B or C. If A500 pipe is substituted for A53, then the outside diameter shall be as detailed and wall thickness greater than or equal to A53. All Structural Steel Plates and Shapes shall conform to AASHTO M270 Gr. 36, Gr. 50 or Gr. 50W*. Stainless steel for shims, sleeves and handhole covers shall be ASTM A240, Type 302 or 304, or another alloy suitable for exterior exposure and acceptable to the Engineer. The steel pipe and stiffening ribs at the base plate for the column shall have a minimum longitudinal Charpy V-Notch (CVN) energy of 15 lb.-ft. at 40° F. (Zone 2) before galvanizing.

FASTENERS FOR ALUMINUM TRUSSES: All bolts noted as "high strength" must satisfy the requirements of AASHTO M164 (ASTM A325), or approved alternate, and must have matching lock nuts. Threaded studs for splices (if Members interfere) must satisfy the requirements of ASTM A449, ASTM A193, Grade B7, or approved alternate, and must have matching lock nuts. Bolts and lock nuts not required to be high strength must satisfy the requirements of ASTM A307. All bolts and lock nuts must be hot dip galvanized per AASHTO M232. The lock nuts must have nylon or steel inserts. A stainless steel flat washer conforming to ASTM A240 Type 302 or 304, is required under both head and nut or under both nuts where threaded studs are used. High strength bolt installation shall conform to Article 505.04 (f) (2)d of the IDOT Standard Specifications for Road and Bridge Construction. Rotational capacity ("ROCAP") testing of bolts will not be required.

U-BOLTS AND EYEBOLTS: U-Bolts and Eyebolts must be produced from ASTM A276 Type 304, 304L, 316 or 316L, Condition A, cold finished stainless steel, or an equivalent material acceptable to the Engineer. All nuts for U-Bolts and Eyebolts must be lock nuts equivalent to ASTM A307 with nylon or steel inserts and hot dip galvanized per AASHTO M232. A stainless steel flat washer conforming to ASTM A240, Type 302 or 304, is required under each U-Bolt and Eyebolt lock nut.

GALVANIZING: All Steel Grating, Plates, Shapes and Pipe shall be Hot Dip Galvanized after fabrication in accordance with AASHTO M111. Painting is not permitted.

ANCHOR RODS: Shall conform to ASTM F1554 Gr. 105.

CONCRETE SURFACES: All concrete surfaces above an elevation 6" below the lowest final ground line at each foundation shall be cleaned and coated with Concrete Sealer in accordance with the Standard Specifications.

REINFORCEMENT BARS: Reinforcement Bars designated (E) shall be epoxy coated in accordance with the Standard Specifications.

FOUNDATIONS: The contract unit price for Concrete Foundations and Drilled Shaft Concrete Foundations shall include reinforcement bars complete in place.

TOTAL BILL OF MATERIAL

ITEM	UNIT	TOTAL
OVERHEAD SIGN STRUCTURE - SPAN, TYPE II-A (4'-6" X 5'-3")	Foot	258.5

WSP USA Inc.
30 N. LASALLE STREET
SUITE 4200
CHICAGO, IL 60602
TEL: (312) 782-8150
FAX: (312) 782-1684

USER NAME = USSJ696614	DESIGNED - SJJ	REVISED -	
	CHECKED - PJL	REVISED -	
PLOT SCALE = 8.762 ' / in.	DRAWN - SJJ	REVISED -	
PLOT DATE = 11/6/2025	CHECKED - PJL	REVISED -	

STATE OF ILLINOIS
DEPARTMENT OF TRANSPORTATION

OVERHEAD SIGN STRUCTURES - GENERAL PLAN & ELEVATION - ALUMINUM TRUSS & STEEL SUPPORTS

SHEET 1 OF 15 SHEETS

F.A.I RTE.	SECTION	COUNTY	TOTAL SHEETS	SHEET NO.
I-80	FAI 80 21 STRUCTURE 2	WILL	1230	461

CONTRACT NO. 62R23

ILLINOIS | FED. AID PROJECT

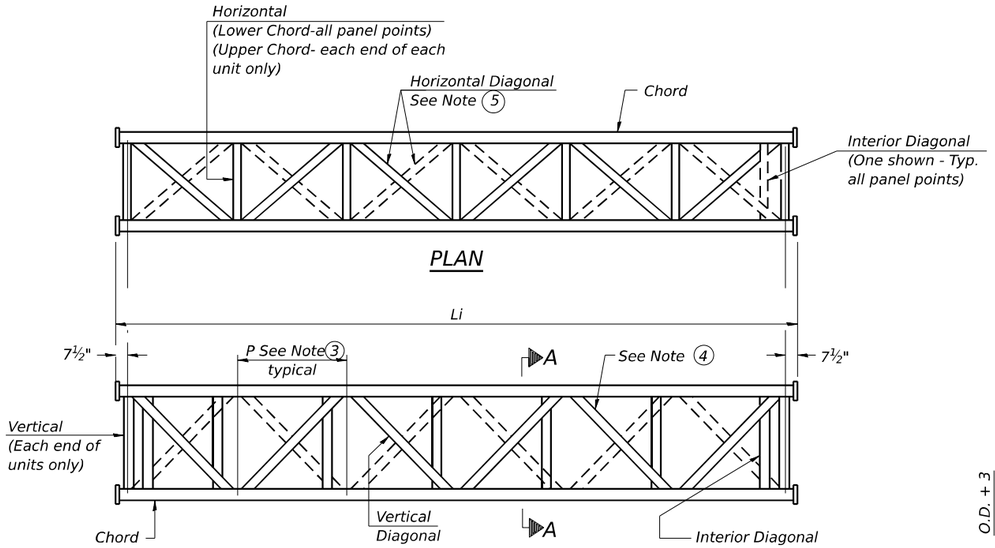

ELEVATION
TYPICAL INTERIOR UNIT
Even number of panels/interior unit required.

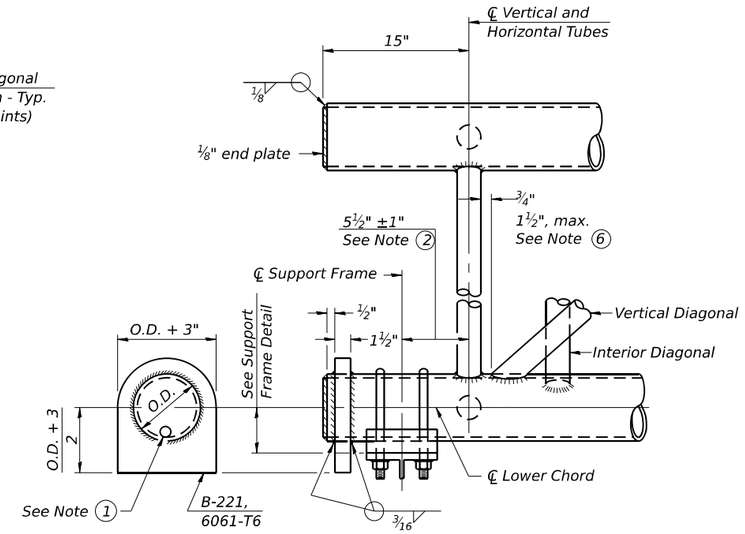

SUPPORT END DETAIL FOR EXTERIOR UNIT

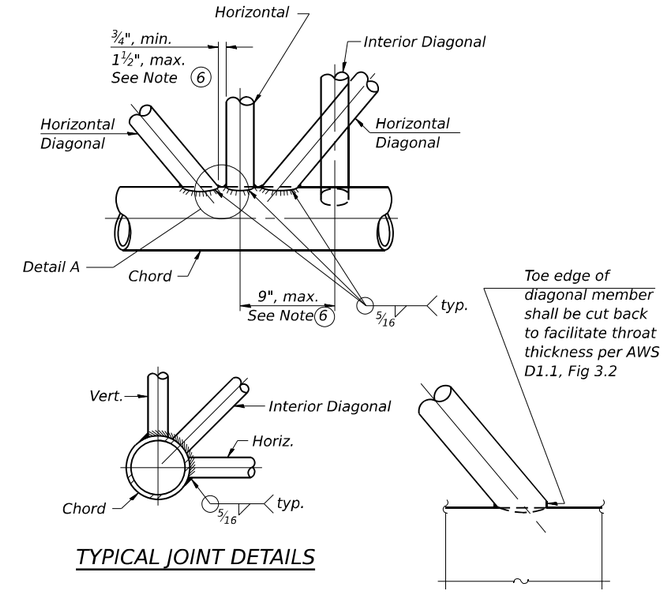

TYPICAL JOINT DETAILS

DETAIL A

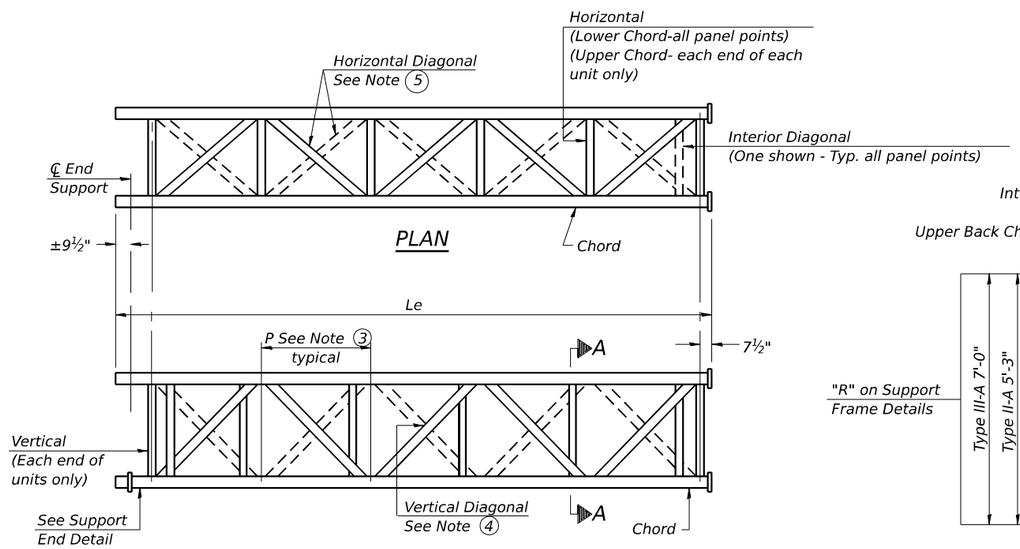

ELEVATION
TYPICAL EXTERIOR UNIT
Even or odd number of panels/exterior units allowed.

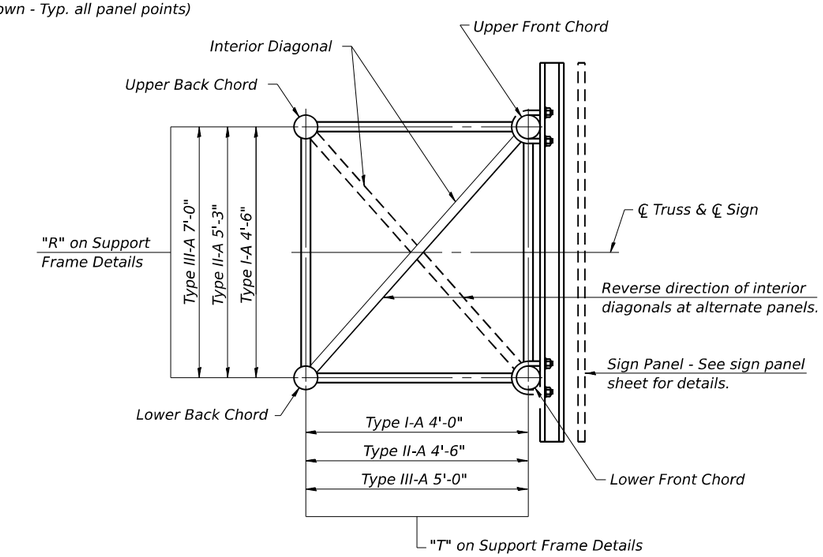

SECTION A-A

1. Contractor may alternatively use standard aluminum drive-fit cap to close end. ½" Ø drain hole in end plate/drive-fit cap. (Typ. at ends of all chords)
2. 5½" end dimension may vary by ±1" to provide uniform panel spacing (P).
3. Panel spacing (P) shall be uniform for entire truss and between 4'-0" and 5'-0" for Type I-A or 4'-0" and 5'-6" for Types II-A and III-A.
4. Vertical Diagonals in front and back face shall alternate.
5. Hidden lines show wind bracing alternates direction between planes of top and bottom chords.
6. All diagonals shall be detailed for minimum offset from the panel point based on the following: Offset shall be such as to provide a ¾" minimum to 1½" maximum clearance between any diagonal and any horizontal or vertical member, and to provide clearance for U-bolt connections of signs or walkway brackets.

WSP USA Inc.
30 N. LASALLE STREET
SUITE 4200
CHICAGO, IL 60602
TEL: (312) 782-8150
FAX: (312) 782-1684

USER NAME = USSJ696614	DESIGNED - SJJ	REVISED -	
	CHECKED - PJL	REVISED -	
PLOT SCALE = 0.167 ' / in.	DRAWN - SJJ	REVISED -	
PLOT DATE = 11/5/2025	CHECKED - PJL	REVISED -	

STATE OF ILLINOIS
DEPARTMENT OF TRANSPORTATION

OVERHEAD SIGN STRUCTURES - ALUMINUM TRUSS
DETAILS FOR TRUSS TYPES I-A, II-A AND III-A

SHEET 2 OF 15 SHEETS

F.A.I RTE.	SECTION	COUNTY	TOTAL SHEETS	SHEET NO.
I-80	FAI 80 21 STRUCTURE 2	WILL	1230	462
		CONTRACT NO. 62R23		
		ILLINOIS	FED. AID PROJECT	

TRUSS UNIT TABLE

Structure Number	Station	Design Truss Type	Exterior Units (2)			Interior Unit				Upper & Lower Chord		Verticals; Horizontals; Vertical,Horizontal, and Interior Diagonals		Camber at Midspan	Splicing Flange					
			No. Panels per Unit	Unit Lgth.(Le)	Panel Lgth.(P)	No. Req'd.	No. Panels per Unit	Unit Lgth.(Li)	Panel Lgth.(P)	O.D.	Wall	O.D.	Wall		Bolts No./Splice	Bolts Dia.	Weld Sizes W	Weld Sizes W1	A	B
1S099I080R132.3	41+68	I-A	5	26'-1 3/4"	4'-10 1/4"	1	6	30'-4 1/2"	4'-10 1/4"	6"	5/16"	2 1/2"	5/16"	2"	6	7/8"	3/8"	1/4"	10 1/4"	13 3/4"
1S099I080L132.3	42+01	I-A	5	26'-9 1/4"	4'-11 3/4"	1	6	31'-1 1/2"	4'-11 3/4"	6"	5/16"	2 1/2"	5/16"	2 1/8"	6	7/8"	3/8"	1/4"	10 1/4"	13 3/4"
1S099I080R132.6	56+79	I-A	7	32'-1 1/2"	5'-1"	1	6	31'-6"	5'-0 1/2"	6"	5/16"	2 1/2"	5/16"	2 3/4"	6	7/8"	3/8"	1/4"	10 1/4"	13 3/4"

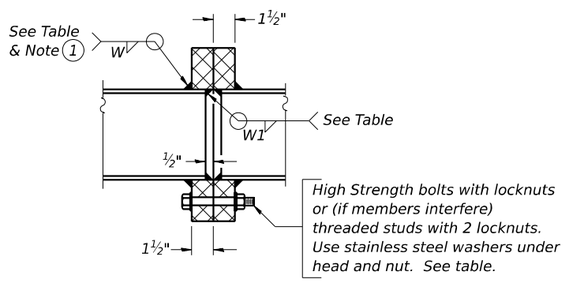

SECTION B-B

1 Splicing Flanges shall be attached to each truss unit with the truss shop assembled to camber shown. Truss units shall be in proper alignment and flange surfaces shall be shop bolted into full contact before welding. Sufficient external welds or tacks shall be made to secure flanges until remaining welds are made after disassembly. Adjacent flanges shall be "match marked" to insure proper field assembly.

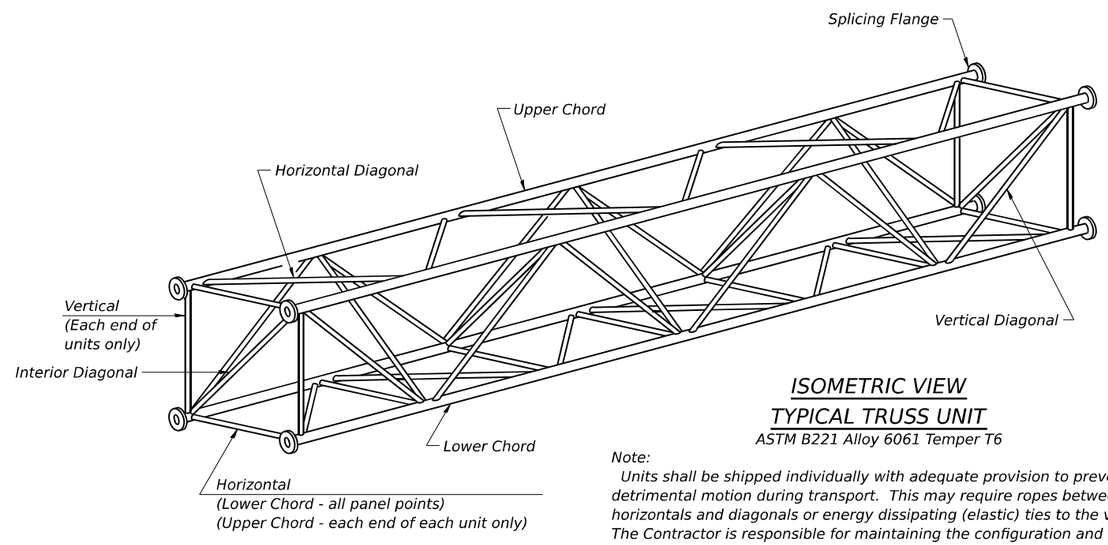

ISOMETRIC VIEW
TYPICAL TRUSS UNIT

ASTM B221 Alloy 6061 Temper T6

Note:
Units shall be shipped individually with adequate provision to prevent detrimental motion during transport. This may require ropes between horizontals and diagonals or energy dissipating (elastic) ties to the vehicle. The Contractor is responsible for maintaining the configuration and protection of the units.

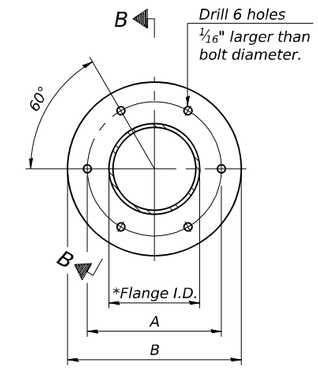

TRUSS TYPES I-A, II-A, & III-A

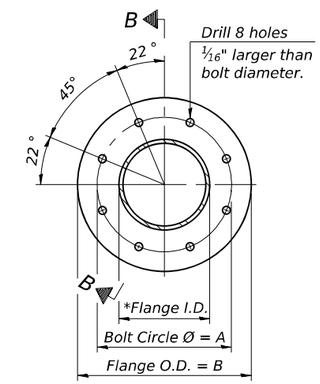

TRUSS TYPES II-A & III-A

SPLICING FLANGES

ASTM B221, Alloy 6061-T6
or ASTM B209, Alloy 6061-T651
*To fit O.D. of Chord with maximum gap of 1/16".

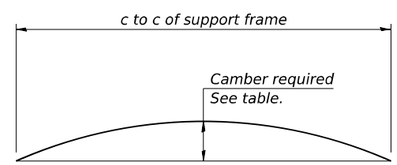

CAMBER DIAGRAM

Camber curve shown is theoretical. Actual camber attained by slope changes at splices between units.

CAMBER ATTAINMENT EXAMPLES

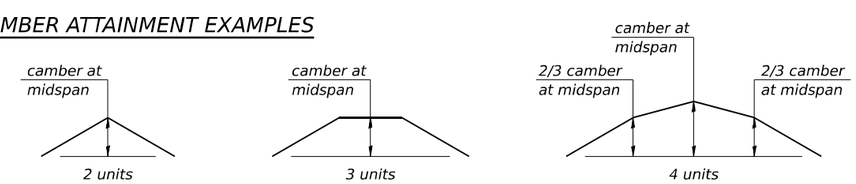

Camber shown is for fabrication only, measured with truss fully supported. (No-load condition)

OS4-A-2 5-15-2023

MODEL: Default
FILE NAME: pw://transystems-pw.bentley.com:transyscorp-pw1-hosted/Documents/Projects_2018/CH401/401180022/03-WSP/CAD/62R23-RB-1/Sheets/Sign Structures/D162R23-OHS103.dgn

WSP USA Inc.
30 N. LASALLE STREET
SUITE 4200
CHICAGO, IL 60602
TEL: (312) 782-8150
FAX: (312) 782-1684

USER NAME = USSJ696614	DESIGNED - SJJ	REVISED -	
	CHECKED - PJL	REVISED -	
PLOT SCALE = 0.167 ' / in.	DRAWN - SJJ	REVISED -	
PLOT DATE = 11/5/2025	CHECKED - PJL	REVISED -	

STATE OF ILLINOIS
DEPARTMENT OF TRANSPORTATION

OVERHEAD SIGN STRUCTURES - ALUMINUM TRUSS DETAILS FOR TRUSS TYPES I-A, II-A AND III-A

SHEET 3 OF 15 SHEETS

F.A.I RTE.	SECTION	COUNTY	TOTAL SHEETS	SHEET NO.
I-80	FAI 80 21 STRUCTURE 2	WILL	1230	463
		CONTRACT NO. 62R23		
	ILLINOIS	FED. AID PROJECT		

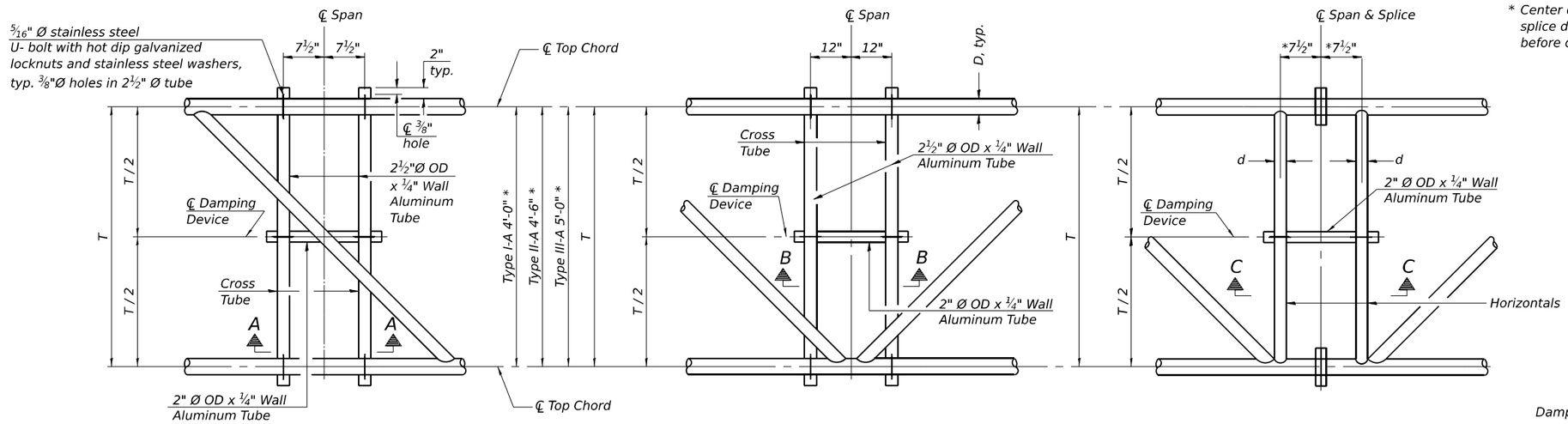

* Center of horizontal to center of splice dimension may vary. Verify before drilling holes in mounting tube.

PLAN DETAIL "A"
℄ Span between Panel Points

PLAN DETAIL "B"
℄ Span at Panel Point

PLAN DETAIL "C"
℄ Span at ℄ Chord Splice

NOTES

Damper: One damper per truss. (31 lbs. minimum Stockbridge-Type Aluminum - 29" minimum between ends of weights) Cost included in Overhead Sign Structure...

Materials: Aluminum tubes shall be ASTM B221 alloy 6061 temper T6. Cost included in Overhead Sign Structure...

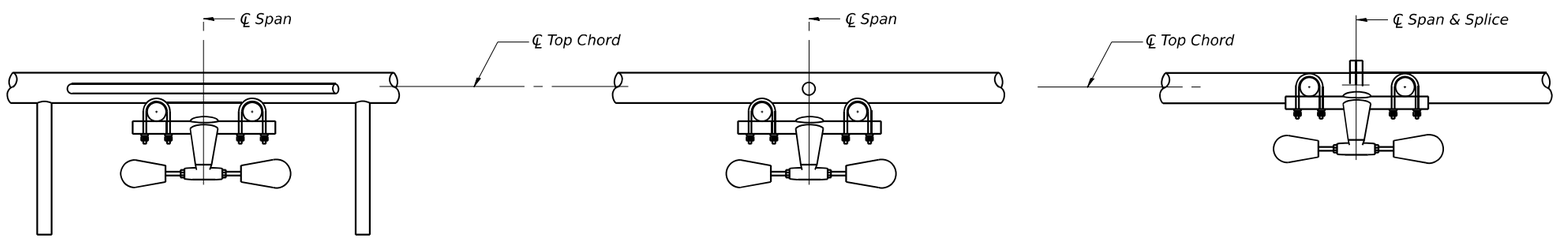

SECTION A-A

SECTION B-B

SECTION C-C

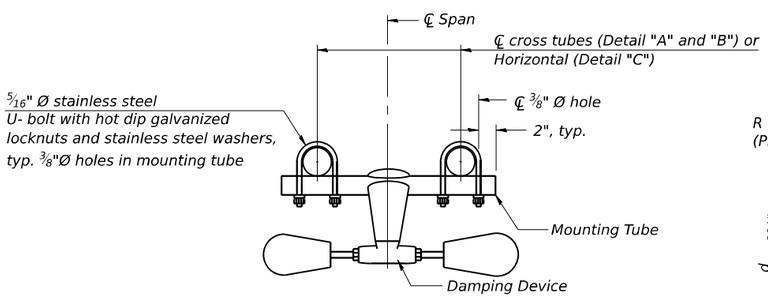

TRUSS DAMPING DEVICE CONNECTION DETAIL
(Typical)

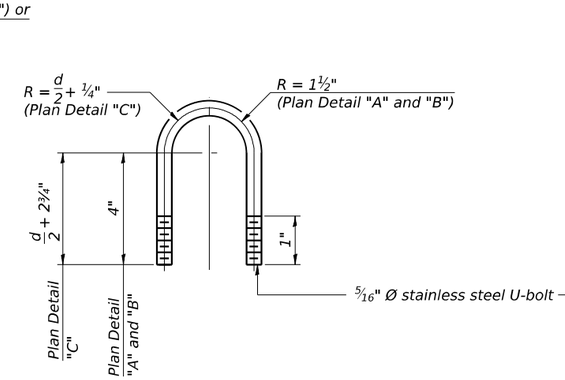

DAMPING DEVICE MOUNTING TUBE U-BOLT DETAIL
(Typical)

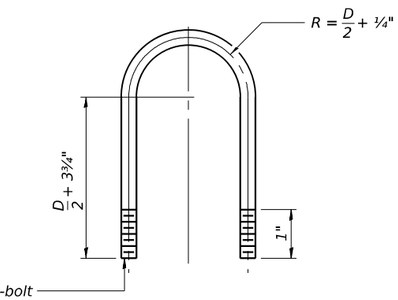

TOP CHORD TO CROSS TUBE U-BOLT DETAIL
(Typical - Detail "A" and "B")

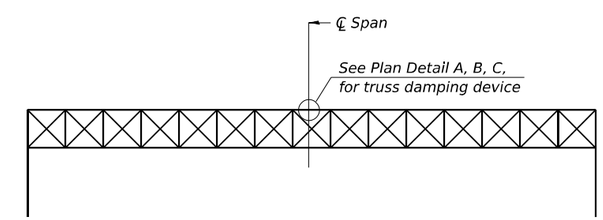

ELEVATION
Aluminum Overhead Sign Truss

OS-A-D 5-15-2023

MODEL: Default
FILE NAME: pw://transystems-pw.bentley.com:transyscorp-pw1-hosted/Documents/Projects_2018/CH401/401180022/03-WSP/CAD/62R23-R8-1/Sheets/Sign Structures/D162R23-OHS104.dgn

WSP USA Inc.
30 N. LASALLE STREET
SUITE 4200
CHICAGO, IL 60602
TEL: (312) 782-8150
FAX: (312) 782-1684

USER NAME = USSJ696614	DESIGNED - SJJ	REVISED -	
	CHECKED - PJL	REVISED -	
PLOT SCALE = 8.762 ' / in.	DRAWN - SJJ	REVISED -	
PLOT DATE = 11/5/2025	CHECKED - PJL	REVISED -	

STATE OF ILLINOIS
DEPARTMENT OF TRANSPORTATION

OVERHEAD SIGN STRUCTURE
DAMPING DEVICE

SHEET 4 OF 15 SHEETS

F.A.I RTE.	SECTION	COUNTY	TOTAL SHEETS	SHEET NO.
I-80	FAI 80 21 STRUCTURE 2	WILL	1230	464
		CONTRACT NO. 62R23		
	ILLINOIS	FED. AID PROJECT		

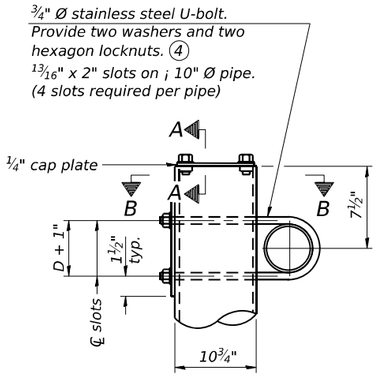

DETAIL A

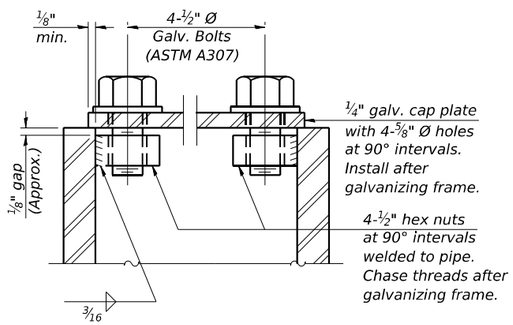

SECTION A-A

As an alternate to bolts, may use galvanized drive-fit caps installed after galvanizing frame.

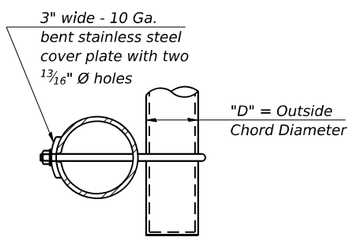

SECTION B-B

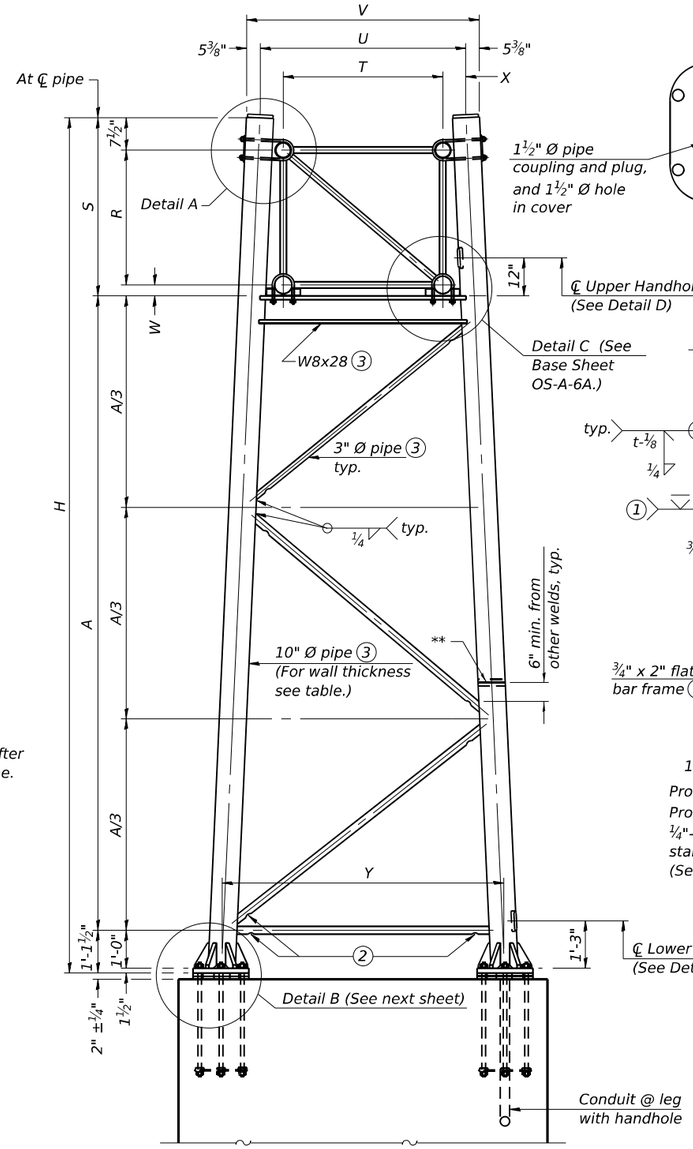

For Pedestal Details, see Bridge Plans.

SIDE ELEVATION

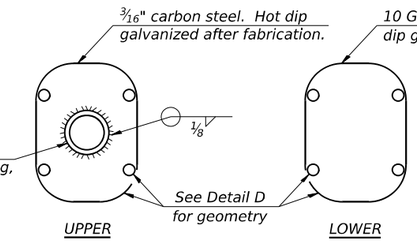

HANDHOLE COVERS

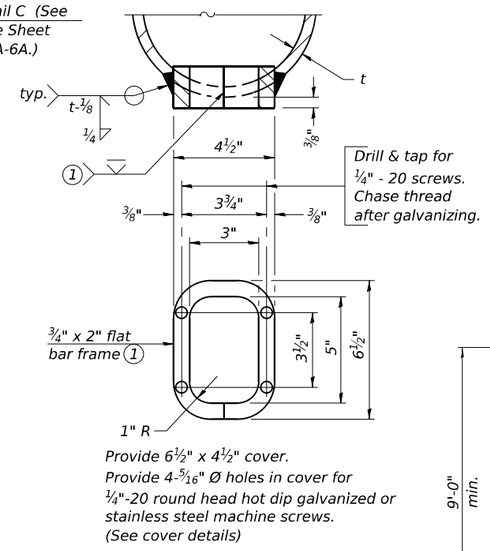

Provide 6½" x 4½" cover.
Provide 4-5/16" Ø holes in cover for ¼"-20 round head hot dip galvanized or stainless steel machine screws.
(See cover details)

DETAIL D

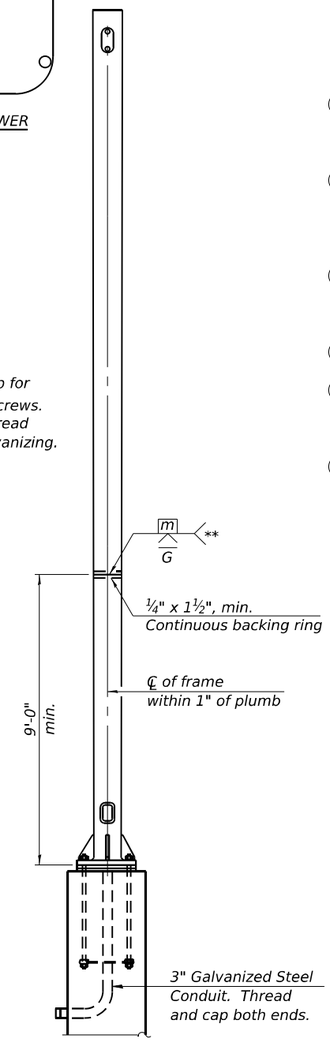

END ELEVATION

Support Design Loads: See Base Sheet OS-A-1 for design and loading criteria.
Load combinations checked include deadload plus:
a) 100% wind normal to sign, 20% parallel to sign
b) 60% wind normal to sign, 30% parallel to sign

(1) In lieu of fabricated handhole frame as shown, may cut from 2" plate (rolling direction vertical). All cut faces to be ground to ANSI Roughness of 500µ in or less.

(2) Galvanizing vent holes of adequate size shall be provided on underside at each end of bracing pipes. Alternately, holes may be provided in wall of pipe column. All vent holes shall be drilled and de-burred, typ.

(3) Steel pipe, plate, carbon steel handhole covers and rolled sections shall be hot dip galvanized after fabrication. Painting is not permitted. See General Plan and Elevation.

(4) See General Notes for fasteners.

(5) Dimensions shown are based on selection criteria in the Sign Structures Manual. Nonstandard applications must have dimensions verified or amended as appropriate.

(6) "H" based on 15'-0" or actual sign height, whichever is greater.

Truss Type	Dimensions							
	R	S	T	U	V	W	X	Y
I-A	4'-6"	5'-5½"	4'-0"	5'-6"	6'-4¾"	4"	9"	8'-3"
II-A (5)	5'-3"	6'-3¼"	4'-6"	6'-1"	6'-11¾"	4¾"	9½"	8'-3"

10" Ø PIPE TRUSS SUPPORT FRAME

** One butt welded joint is allowed only on one post per support frame. If used, weld procedure must be pre-approved by Engineer and joint shall receive 100% RT or UT (tension criteria) at Contractor's expense.

Structure Number	Station	Support Left	Support Right	Truss Type	H (6)	A
1S099I080R132.3	41+68	X	X	II-A	25'-0½"	17'-7¾"
1S099I080L132.3	42+01	X	X	II-A	25'-0½"	17'-7¾"
1S099I080R132.6	56+79	X		II-A	25'-6"	18'-1¼"
			X		22'-8½"	15'-3¾"

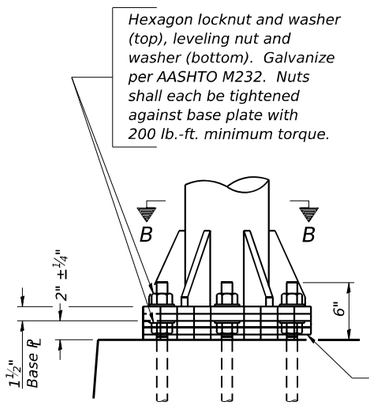

DETAIL B

Ribs shall be cut to fit slope of pipe.

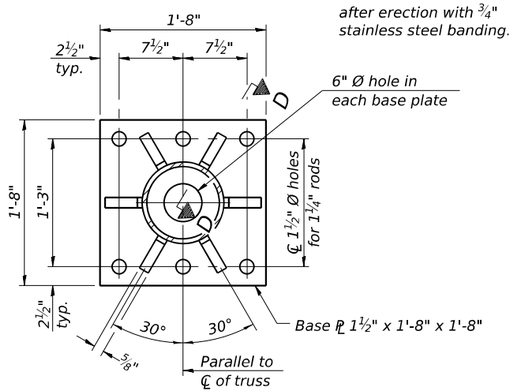

SECTION B-B

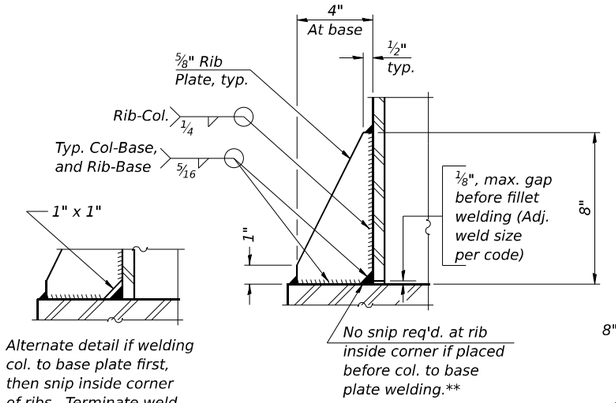

SECTION D-D

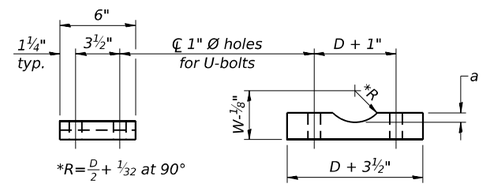

*R = D/2 + 1/32 at 90°

D = Outside Diameter of Chord.
For W, see previous sheet.

SADDLE SHIM DETAIL

ASTM B26 Alloy 356-F
or
ASTM B209 Alloy 6061-T651
(4 required per sign truss)

Truss Chord Nominal Dia.	a
5"	¾"
5½"	13/16"
6"	⅞"
6½"	15/16"
7"	1"

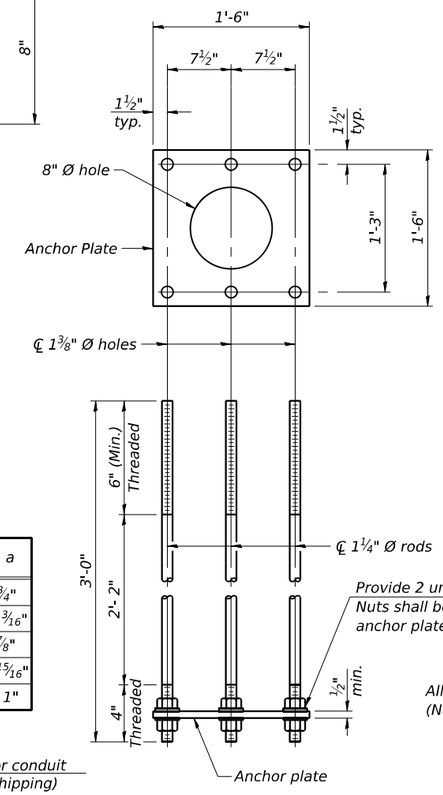

ANCHOR ROD DETAIL

Spread Footing Foundation

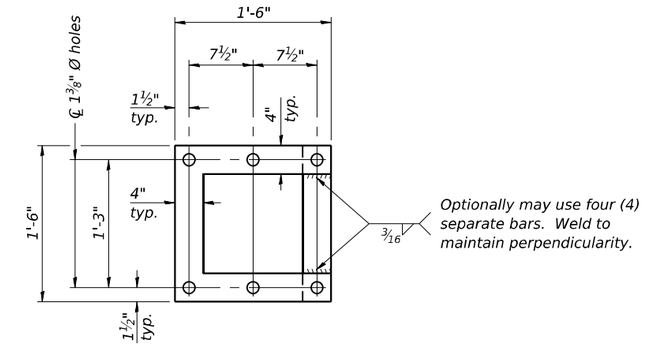

POSITIONING PLATE(S)

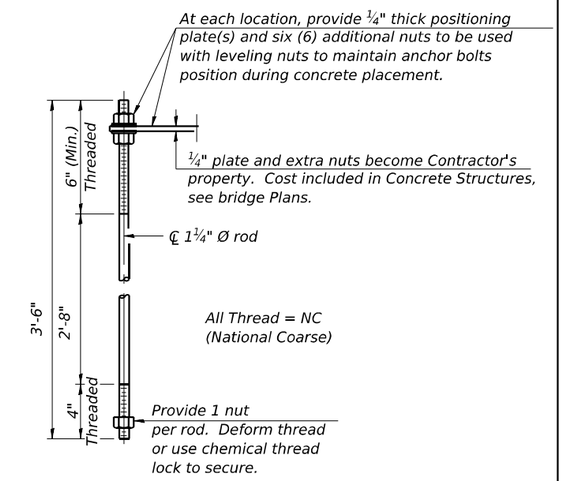

ANCHOR ROD DETAIL

Pedestal Foundation

Anchor rods shall conform to ASTM F1554 Grade 105. Galvanize upper 12" minimum per AASHTO M232. No welding shall be permitted on rods.

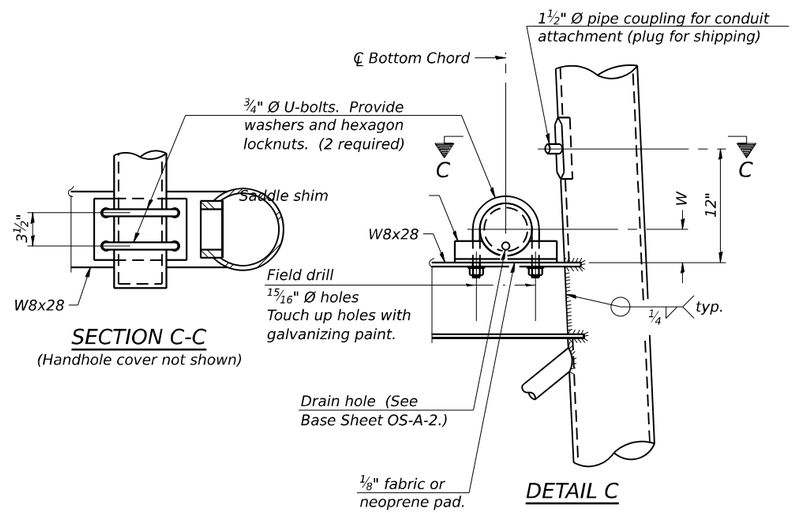

SECTION C-C

(Handhole cover not shown)

DETAIL C

10" Ø PIPE SUPPORT FRAME DETAILS

MODEL: Default
FILE NAME: pw://transystems-pw.bentley.com:transyscorp-pw1-hosted/Documents/Projects_2018/CH401/401180022/03-WSP/CAD/62R23-RB-1/Sheets/Sign Structures/D162R23-OHS106.dgn

WSP USA Inc.
30 N. LASALLE STREET
SUITE 4200
CHICAGO, IL 60602
TEL: (312) 782-8150
FAX: (312) 782-1684

USER NAME = USSJ696614	DESIGNED - SJJ	REVISED -	
	CHECKED - PJL	REVISED -	
PLOT SCALE = 0 1/8 ' / in.	DRAWN - SJJ	REVISED -	
PLOT DATE = 11/5/2025	CHECKED - PJL	REVISED -	

STATE OF ILLINOIS
DEPARTMENT OF TRANSPORTATION

OVERHEAD SIGN STRUCTURES
SUPPORT FRAME DETAILS - ALUMINUM TRUSS

SHEET 6 OF 15 SHEETS

F.A.I RTE.	SECTION	COUNTY	TOTAL SHEETS	SHEET NO.
I-80	FAI 80 21 STRUCTURE 2	WILL	1230	466
		CONTRACT NO. 62R23		
	ILLINOIS	FED. AID PROJECT		

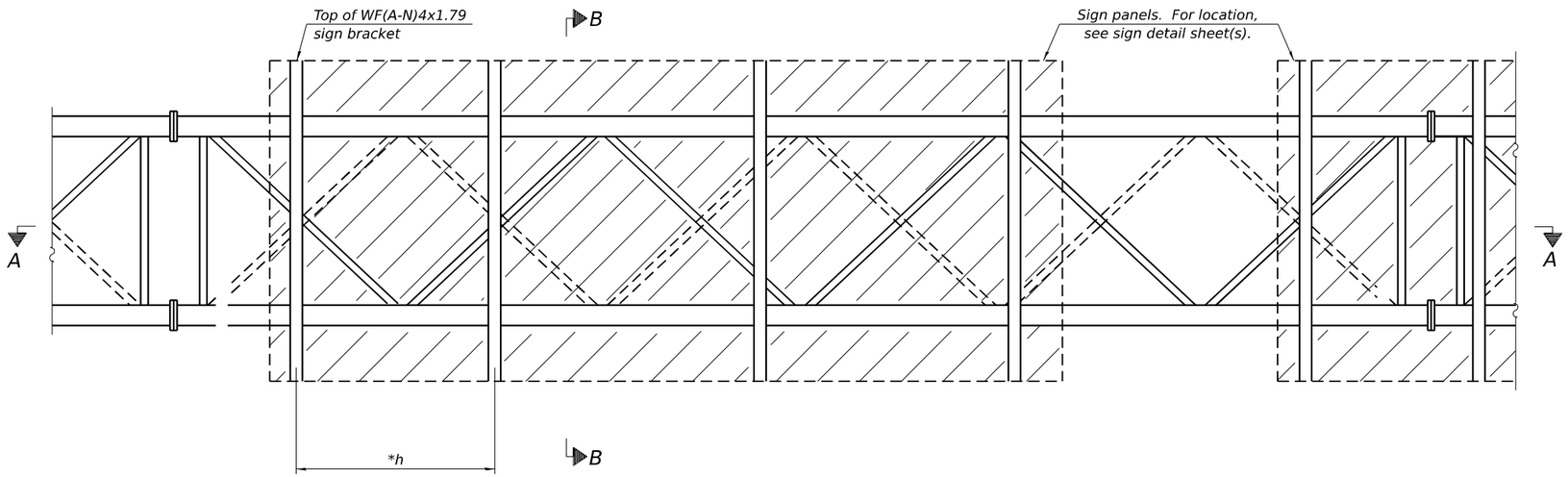

TYPICAL FRONT ELEVATION

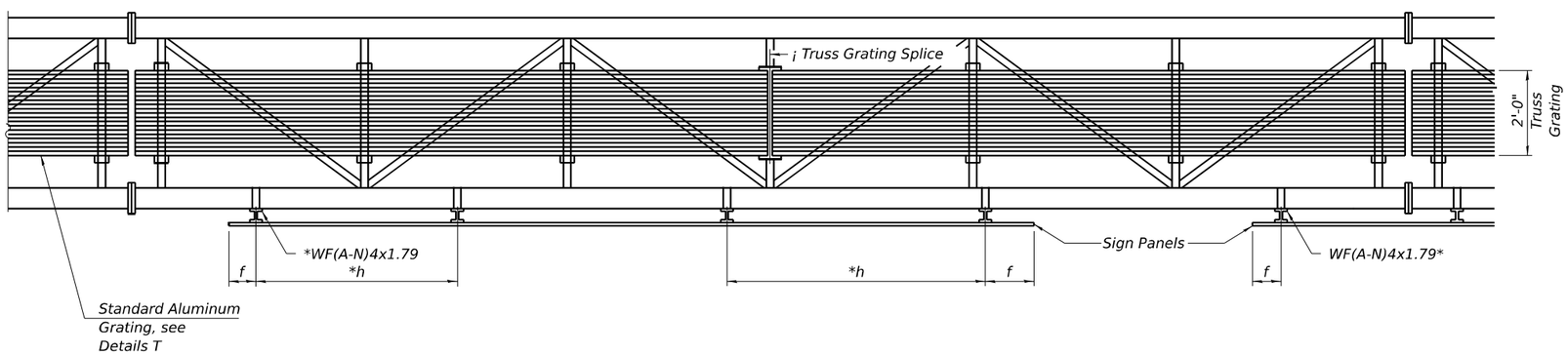

SECTION A-A

Place all sign brackets as close to panel points as practical.

BRACKET TABLE

WF(A-N)4x1.79 ASTM B308, Alloy 6061-T6		
Sign Width		Number Brackets Required
Greater Than	Less Than or Equal To	
	8'-0"	2
8'-0"	14'-0"	3
14'-0"	20'-0"	4
20'-0"	26'-0"	5
26'-0"	32'-0"	6

* Space sign brackets WF(A-N)4x1.79 for efficiency and within limits shown:

f = 12" maximum, 4" minimum (End of sign to ℄ of nearest bracket)
h = 6'-0" maximum (℄ to ℄ sign support brackets, WF(A-N)4x1.7

Notes:
For Detail T and Section B-B, see Base Sheet OS-A-10-NW.
Truss grating to facilitate inspection shall run full length (center to center of support frames) 12"± on overhead trusses. Cost of truss grating is included in "Overhead Sign Structure".
Truss Grating width dimensions are nominal and may vary ½"± based on available standard widths.

OS-A-9-NW 5-15-2023

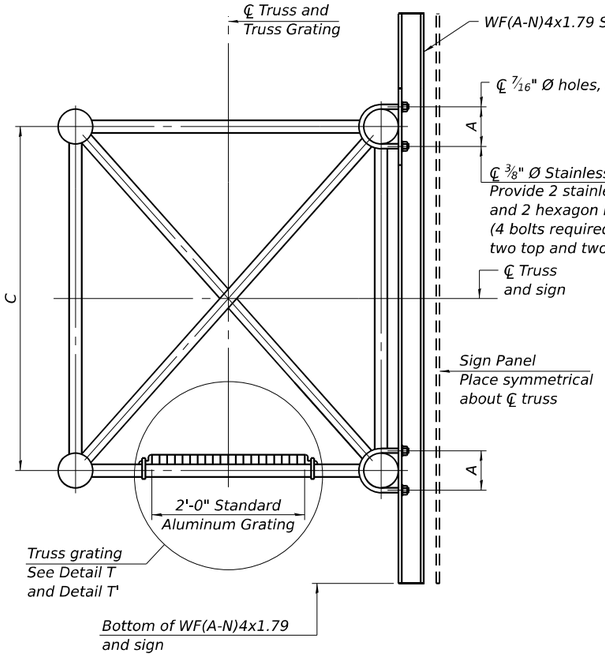

Sign shall be even with the top of the bracket, but it may extend no more than 6" above the top of the bracket for field adjustments.

SECTION B-B

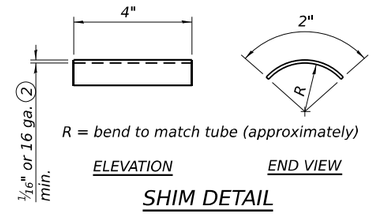

SHIM DETAIL

(1) Drilling holes in grating may be done in shop or field, based on Contractor's preference and subject to accurate alignment.

(2) Stainless steel shims shall be placed as shown in Detail T if needed to compensate for alignment variations between horizontal and diagonal pipes beyond adjustment provided by angles. Thicker shims may be used subject to shims performing properly.

(3) Tube to grating gap may vary from 0 to 1/2", max. to align walkway, allow for camber, etc.

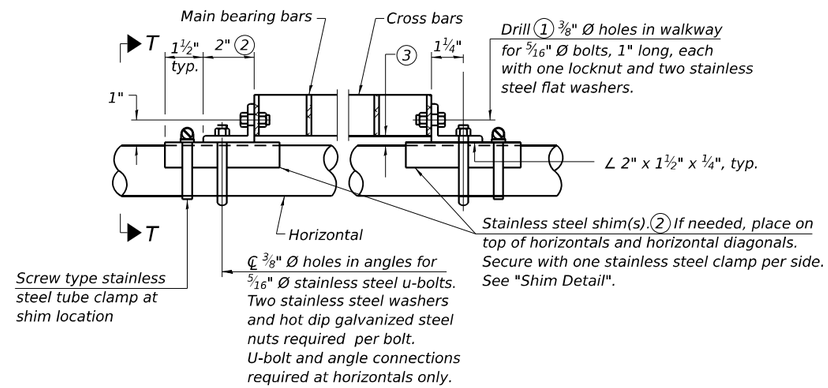

DETAIL T

(Continuous Truss grating)

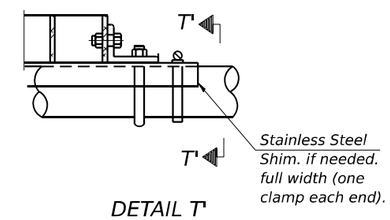

DETAIL T'

(Truss grating splice)

Details not shown same as Detail T.
Alternate materials may be used subject to the Engineer's review and approval.

SPECIFICATIONS FOR STANDARD ALUMINUM GRATING

Main Bearing Bars shall be 3/16" x 1½" on 1 3/16" centers and conform to ASTM B221 Alloy 6061-T6.

Cross bars shall be 3/16" x 1½" on 4" centers and conform to ASTM B221 Alloy 6063-T5 or 6061-T6.

OR

Aluminum Grating with modified "t" sections for main bearing bars shall meet the following requirements:

Main bars shall conform to ASTM B221 Alloy 6061-T6 and have a minimum section modulus equal to 0.0705 in.³ per bar, a depth of 1½", spaced on 1 3/16" centers.

Cross bars shall conform to ASTM B221 Alloy 6063-T5 or T-42 and spaced on 4" centers.

Structure Number	Station	A	C
1S099I080R132.3	41+68	5 7/8"	4'-6"
1S099I080L132.3	42+01	5 7/8"	4'-6"
1S099I080R132.6	56+82	5 7/8"	4'-6"

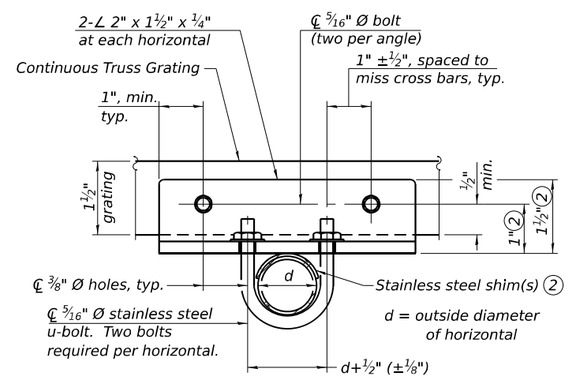

SECTION T-T

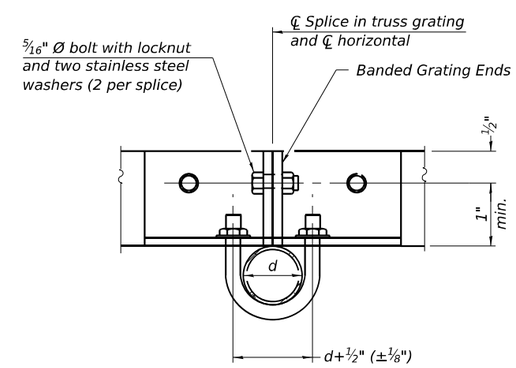

SECTION T'-T'

OS-A-10-NW 5-15-2023

MODEL: Default
FILE NAME: pw://transystems-pw.bentley.com:transyscorp-pw1-hosted/Documents/Projects_2018/CH401/401180022/03-WSP/CAD/62R23-RB-1/Sheets/Sign Structures/D162R23-OHS108.dgn

WSP USA Inc.
30 N. LASALLE STREET
SUITE 4200
CHICAGO, IL 60602
TEL: (312) 782-8150
FAX: (312) 782-1684

USER NAME = USSJ696614	DESIGNED - SJJ	REVISED -	
	CHECKED - PJL	REVISED -	
PLOT SCALE = 8.762 ' / in.	DRAWN - SJJ	REVISED -	
PLOT DATE = 11/6/2025	CHECKED - PJL	REVISED -	

STATE OF ILLINOIS
DEPARTMENT OF TRANSPORTATION

OVERHEAD SIGN STRUCTURES
ALUMINUM WALKWAY DETAILS

SHEET 8 OF 15 SHEETS

F.A.I RTE.	SECTION	COUNTY	TOTAL SHEETS	SHEET NO.
I-80	FAI 80 21 STRUCTURE 2	WILL	1230	468
		CONTRACT NO. 62R23		
	ILLINOIS	FED. AID PROJECT		

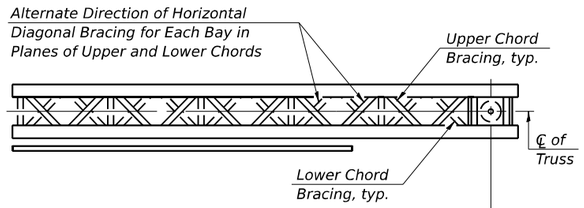

TYPICAL PLAN

(Walkway not shown)

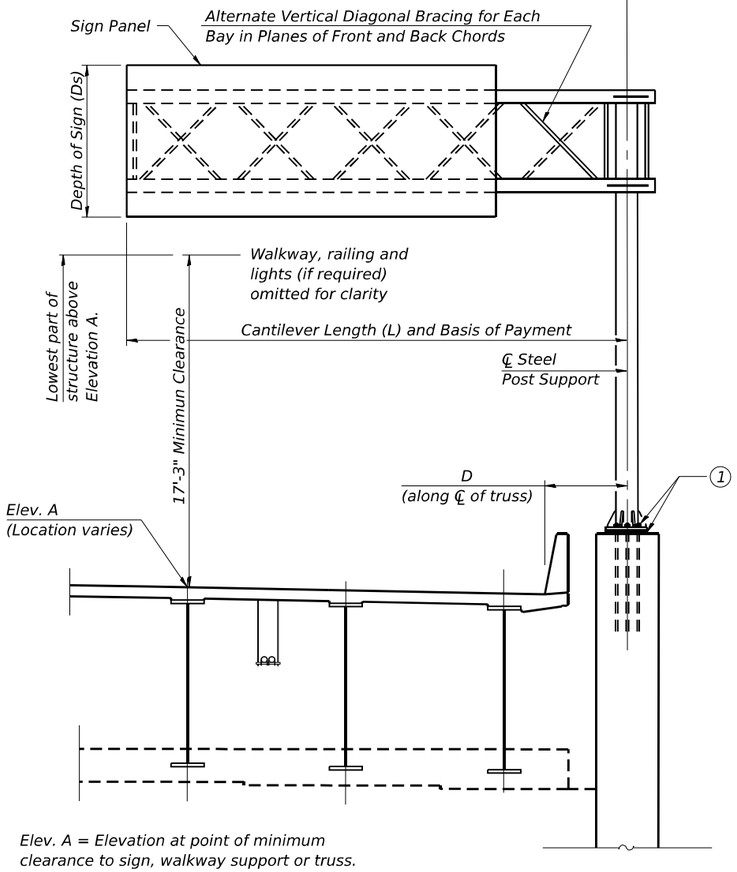

Elev. A = Elevation at point of minimum clearance to sign, walkway support or truss.

TYPICAL ELEVATION

Looking in Direction of Traffic

Sign support structures may be subject to damaging vibrations and oscillations when sign panels are not in place during erection or maintenance of the structure. To avoid these vibrations and oscillations, consideration should be given to attaching temporary blank sign panels to the structure.

Structure Number	Station	Design Truss Type	Cantilever Length (L)	Elev. A	Dim. D	Ds	Total Sign Area
1C099I080L132.5	52+10	II-C-A	30 Ft.	592.40	3'-7"	13'-0"	178.3 Sq. Ft.

Truss Type	Maximum Sign Area	Maximum Length
I-C-A	170 Sq. Ft.	25 Ft.
II-C-A	340 Sq. Ft.	30 Ft.
III-C-A	400 Sq. Ft.	40 Ft.

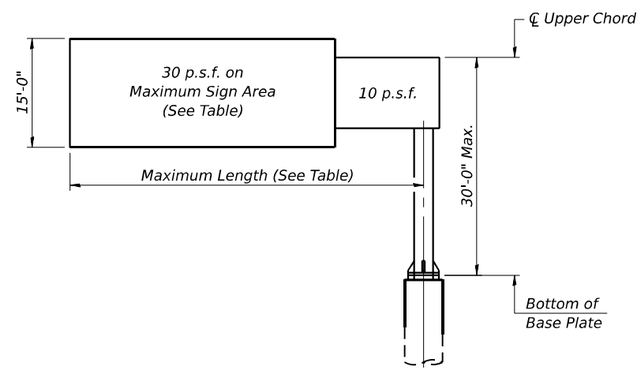

DESIGN WIND LOADING DIAGRAM

Parameters shown are basis for I.D.O.T. Standards Installations not within dimensional limits shown require special analysis for all components.

Note:
Trusses shall be shipped individually with adequate provision to prevent detrimental motion during transport. This may require ropes between horizontals and diagonals or energy dissipating (elastic) ties to the vehicle. The contractor is responsible for maintaining the configuration and protection of the trusses.

1 After adjustments to level truss and insure adequate vertical clearance, all top and leveling nuts shall be tightened against the base plate with a minimum torque of 200 lb.-ft. Stainless steel mesh shall then be placed around the perimeter of the base plate. Secure to base plate with stainless steel banding.

* If M270 Gr. 50W (M222) steel is proposed, chemistry for plate to be used shall first be approved by the Engineer as suitable for galvanizing and welding.

GENERAL NOTES

DESIGN: AASHTO Standard Specifications for Structural Supports for Highway Signs, Luminaires and Traffic Signals. ("AASHTO Specifications")

CONSTRUCTION: Current (at time of letting) Illinois Department of Transportation Standard Specifications for Road and Bridge Construction, Supplemental Specifications and Special Provisions. ("Standard Specifications")

LOADING: 90 M.P.H. WIND VELOCITY

WALKWAY LOADING: Dead load plus 500 lbs. concentrated live load.

DESIGN STRESSES:
Field Units
f'c = 3,500 p.s.i.
fy = 60,000 p.s.i. (reinforcement)

WELDING: All welds to be continuous unless otherwise shown. All welding to be done in accordance with current AWS D1.1 and D1.2 Structural Welding Codes (Steel and Aluminum) and the Standard Specificiations.

MATERIALS: Aluminum Alloys as shown throughout plans. All Structural Steel Pipe shall be ASTM A53 Grade B or A500 Grade B or C. If A500 pipe is substituted for A53, then the outside diameter shall be as detailed and wall thickness greater than or equal to A53.
All Structural Steel Plates and Shapes shall conform to AASHTO M270 Gr. 36, Gr. 50 or Gr. 50W*. Stainless steel for shims, sleeves and handhole covers shall be ASTM A240, Type 302 or 304, or another alloy suitable for exterior exposure and acceptable to the Engineer.
The steel pipe and stiffening ribs at the base plate for the column shall have a minimum longitudinal Charpy V-Notch (CVN) energy of 15 lb.-ft. at 40° F. (Zone 2) before galvanizing.

FASTENERS FOR ALUMINUM TRUSSES: All bolts noted as "high strength" must satisfy the requirements of AASHTO M164 (ASTM A325), or approved alternate, and must have matching lock nuts. Threaded studs for splices (if Members interfere) must satisfy the requirements of ASTM A449, ASTM A193, Grade B7, or approved alternate, and must have matching lock nuts. Bolts and lock nuts not required to be high strength must satisfy the requirements of ASTM A307. All bolts and lock nuts must be hot dip galvanized per AASHTO M232. The lock nuts must have nylon or steel inserts. A stainless steel flat washer conforming to ASTM A240 Type 302 or 304, is required under both head and nut or under both nuts where threaded studs are used. High strength bolt installation shall conform to Article 505.04 (f) (2)d of the IDOT Standard Specifications for Road and Bridge Construction. Rotational capacity ("ROCAP") testing of bolts will not be required.

U-BOLTS AND EYEBOLTS: U-Bolts and Eyebolts must be produced from ASTM A276 Type 304, 304L, 316 or 316L, Condition A, cold finished stainless steel, or an equivalent material acceptable to the Engineer. All nuts for U-Bolts and Eyebolts must be lock nuts equivalent to ASTM A307 with nylon or steel inserts and hot dip galvanized per AASHTO M232. A stainless steel flat washer conforming to ASTM A240, Type 302 or 304, is required under each U-Bolt and Eyebolt lock nut.

GALVANIZING: All Steel Grating, Plates, Shapes and Pipe shall be Hot Dip Galvanized after fabrication in accordance with AASHTO M111. Painting is not permitted.

ANCHOR RODS: Shall conform to ASTM F1554 Gr. 105.

CONCRETE SURFACES: All concrete surfaces above an elevation 6" below the lowest final ground line at each foundation shall be cleaned and coated with Concrete Sealer in accordance with the Standard Specifications.

REINFORCEMENT BARS: Reinforcement Bars designated (E) shall be epoxy coated in accordance with the Standard Specifications.

FOUNDATIONS: The contract unit price for Drilled Shaft Concrete Foundations shall include reinforcement bars complete in place.

TOTAL BILL OF MATERIAL

ITEM	UNIT	TOTAL
OVERHEAD SIGN STRUCTURE - CANTILEVER TYPE II-C-A (36" X 5'-6")	Foot	30'-0"

WSP USA Inc.
30 N. LASALLE STREET
SUITE 4200
CHICAGO, IL 60602
TEL: (312) 782-8150
FAX: (312) 782-1684

USER NAME = USSJ696614	DESIGNED - SJJ	REVISED -	
	CHECKED - PJL	REVISED -	
PLOT SCALE = 0.167 ' / in.	DRAWN - SJJ	REVISED -	
PLOT DATE = 11/5/2025	CHECKED - PJL	REVISED -	

STATE OF ILLINOIS
DEPARTMENT OF TRANSPORTATION

CANTILEVER SIGN STRUCTURES - GENERAL PLAN & ELEVATION
ALUMINUM TRUSS & STEEL POST

SHEET 9 OF 15 SHEETS

F.A.I RTE.	SECTION	COUNTY	TOTAL SHEETS	SHEET NO.
I-80	FAI 80 21 STRUCTURE 2	WILL	1230	469
		CONTRACT NO. 62R23		
	ILLINOIS	FED. AID PROJECT		

MODEL: Default
FILE NAME: pw://transystems-pw.bentley.com:transyscorp-pw1-hosted/Documents/Projects_2018/CH401/401180022/03-WSP/CAD/62R23-RB-1/Sheets/Sign Structures/D162R23-OHS201.dgn

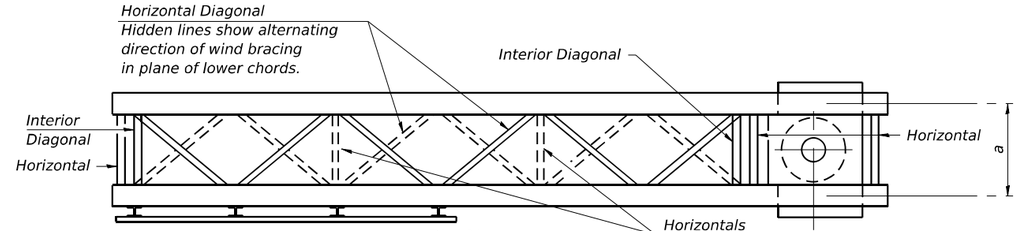

PLAN
(Walkway not shown)

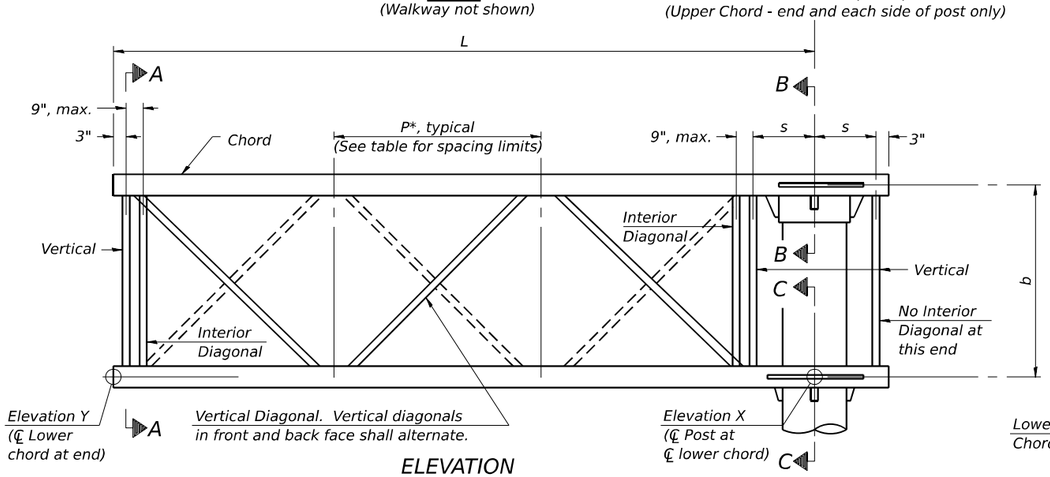

ELEVATION
(Sign and walkway omitted for clarity)

TYPICAL TRUSS UNIT
For Section B-B and Section C-C, see Base Sheet OSC-A-3.

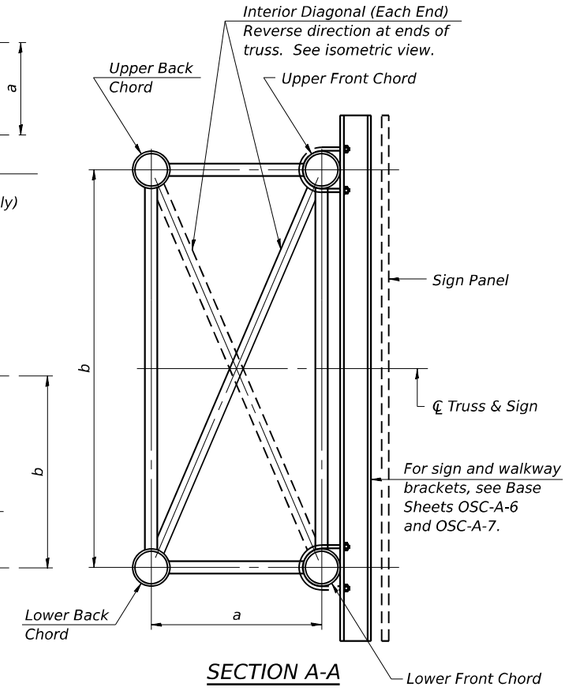

SECTION A-A

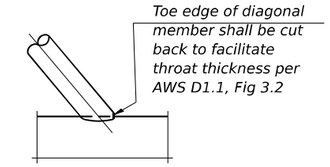

DETAIL A

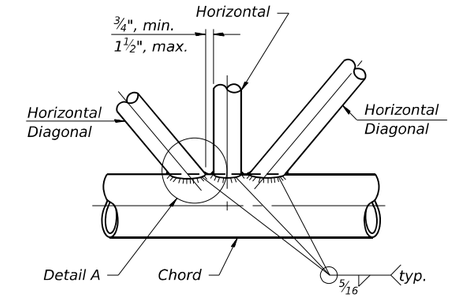

TRUSS INTERIOR JOINT DETAIL

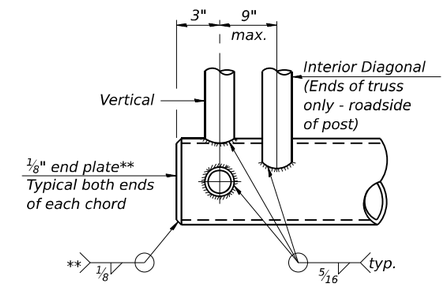

CANTILEVER END JOINT DETAIL

** Contractor may alternatively use standard aluminum drive-fit cap to close ends.
½" Ø Drain hole in end plate / drive-fit cap.

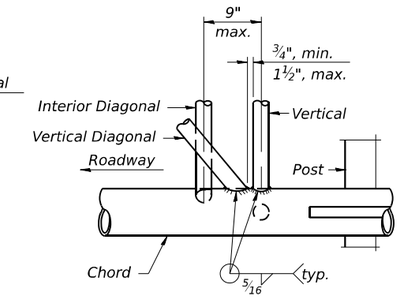

POST END JOINT DETAIL

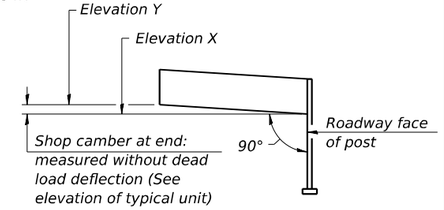

CAMBER DIAGRAM
(For Fabrication Only)

Note:
There are twice as many horizontal diagonals as there are vertical diagonals.

TRUSS UNIT TABLE

Truss Type	Dimension "a"	Dimension "b"	Dimension "s"	Limits for Panel Spacing (P)*	Up. & Low. Chord O.D.	Up. & Low. Chord Wall	Verticals; Horizontals; Vertical, Horizontal, and Interior Diagonals O.D.	Verticals; Horizontals; Vertical, Horizontal, and Interior Diagonals Wall
I-C-A	24"	54"	16"	36" min. to 48" max.	5"	5/16"	2½"	5/16"
II-C-A	36"	66"	21"	42" min. to 54" max.	6½"	5/16"	3¼"	5/16"
III-C-A (35' Max.)	36"	84"	21"	48" min. to 66" max.	7"	⅜"	3½"	⅜"
III-C-A (>35' to 40')	36"	84"	21"	48" min. to 66" max.	8"	⅜"	3½"	⅜"

$$*P = \frac{L-s-3"}{\#\ Panels}$$

Structure Number	Station	Truss Type	Design Length (L)	Number of Panels Per Unit	Panel Length (P)*
1C099I080L132.5	52+10	II-C-A	30'-0"	7	4'-0"

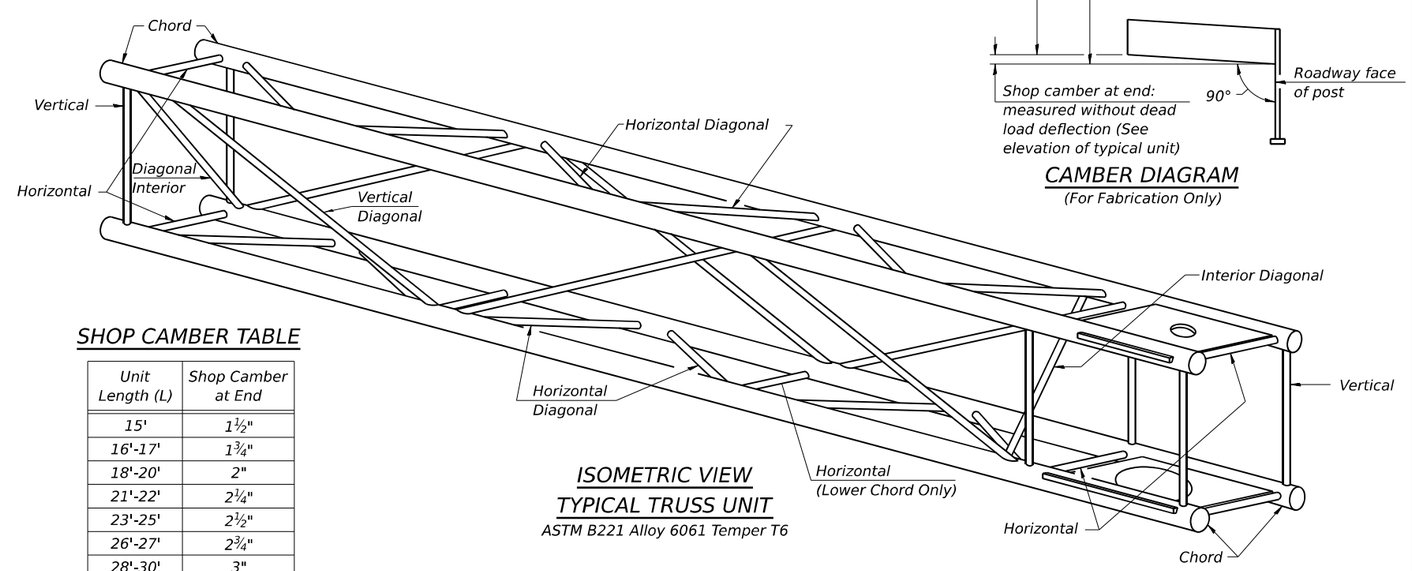

ISOMETRIC VIEW
TYPICAL TRUSS UNIT
ASTM B221 Alloy 6061 Temper T6

SHOP CAMBER TABLE

Unit Length (L)	Shop Camber at End
15'	1½"
16'-17'	1¾"
18'-20'	2"
21'-22'	2¼"
23'-25'	2½"
26'-27'	2¾"
28'-30'	3"
31'-32'	3¼"
33'-35'	3½"
36'-37'	4"
38'-40'	4½"

OSC-A-2 5-15-2023

WSP USA Inc.
30 N. LASALLE STREET
SUITE 4200
CHICAGO, IL 60602
TEL: (312) 782-8150
FAX: (312) 782-1684

USER NAME = USSJ696614	DESIGNED - SJJ	REVISED -	
	CHECKED - PJL	REVISED -	
PLOT SCALE = 0.167 ' / in.	DRAWN - SJJ	REVISED -	
PLOT DATE = 11/5/2025	CHECKED - PJL	REVISED -	

STATE OF ILLINOIS
DEPARTMENT OF TRANSPORTATION

CANTILEVER SIGN STRUCTURES - TRUSS DETAILS
ALUMINUM TRUSS & STEEL POST

SHEET 10 OF 15 SHEETS

F.A.I RTE.	SECTION	COUNTY	TOTAL SHEETS	SHEET NO.
I-80	FAI 80 21 STRUCTURE 2	WILL	1230	470
		CONTRACT NO. 62R23		
		ILLINOIS	FED. AID PROJECT	

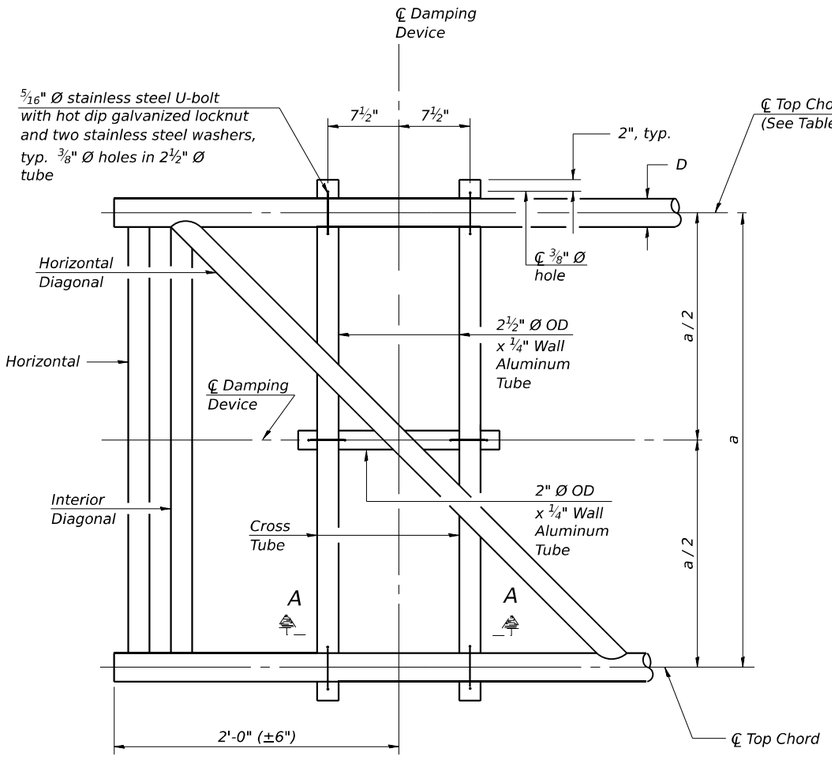

PLAN DETAIL

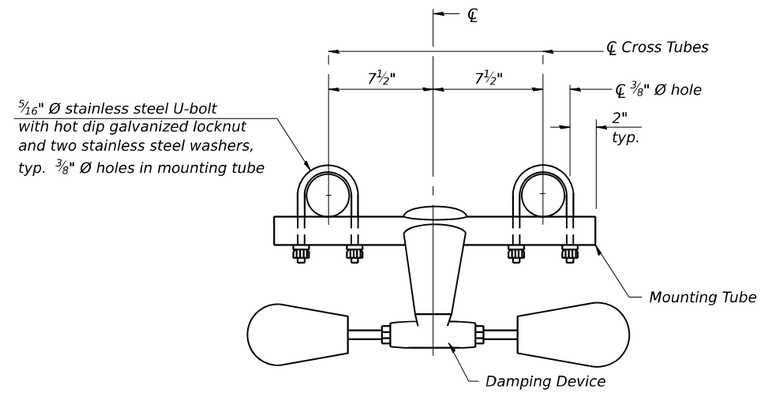

TRUSS DAMPING DEVICE CONNECTION DETAIL

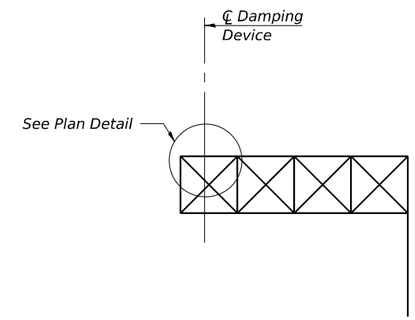

ELEVATION

Aluminum Cantilever Sign Structure

GENERAL NOTES

Damper: One damper per truss. (31 lbs. Stockbridge-Type Aluminum-29" minimum between ends of weights)

Materials: Aluminum tubes shall be ASTM B221 alloy 6061 temper T6

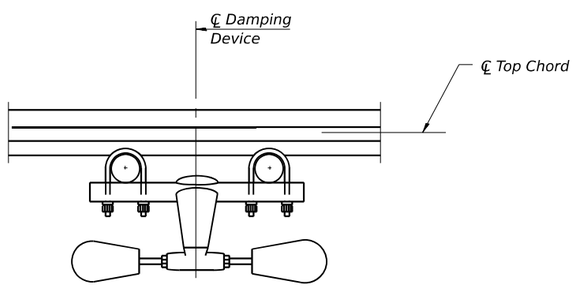

SECTION A-A

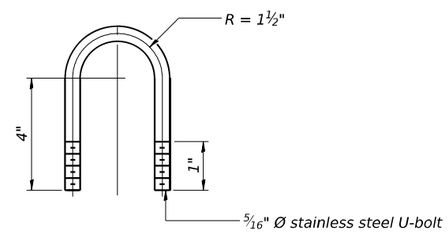

DAMPING DEVICE MOUNTING TUBE U-BOLT DETAIL

(Typical)

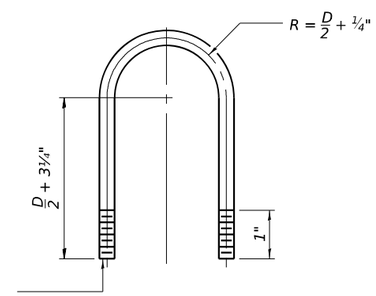

TOP CHORD TO CROSS TUBE U-BOLT DETAIL

(Typical)

OSC-A-D 5-15-2023

WSP USA Inc.
30 N. LASALLE STREET
SUITE 4200
CHICAGO, IL 60602
TEL: (312) 782-8150
FAX: (312) 782-1684

USER NAME = USSJ696614	DESIGNED - SJJ	REVISED -	
	CHECKED - PJL	REVISED -	
PLOT SCALE = 0.167 ' / in.	DRAWN - SJJ	REVISED -	
PLOT DATE = 11/5/2025	CHECKED - PJL	REVISED -	

STATE OF ILLINOIS
DEPARTMENT OF TRANSPORTATION

CANTILEVER SIGN STRUCTURE
DAMPING DEVICE

SHEET 11 OF 15 SHEETS

F.A.I RTE.	SECTION	COUNTY	TOTAL SHEETS	SHEET NO.
I-80	FAI 80 21 STRUCTURE 2	WILL	1230	471
		CONTRACT NO. 62R23		
	ILLINOIS	FED. AID PROJECT		

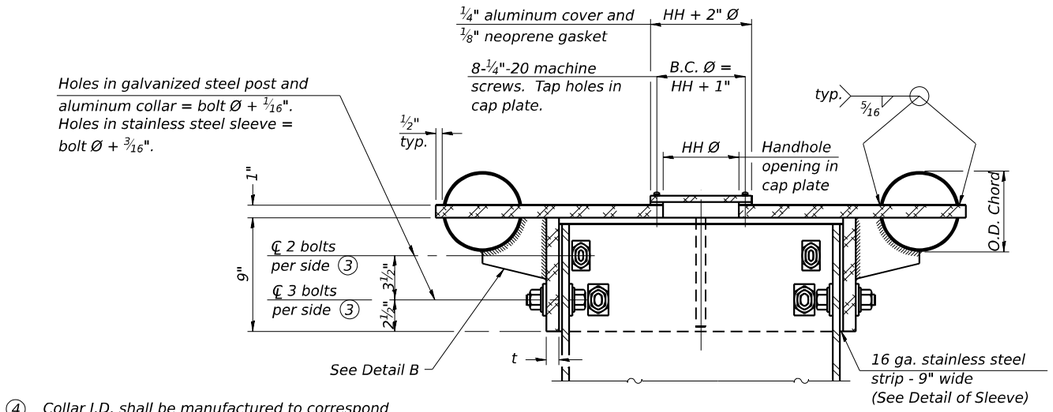

SECTION B-B

Bolts, washers (including contoured washers), and locknuts shall be stainless steel.

(4) Collar I.D. shall be manufactured to correspond to O.D. of actual galvanized post and stainless steel sleeve plus ⅛" (±1/16"). Maximum gap between post and collar at any location equals ⅛" before tightening bolts.

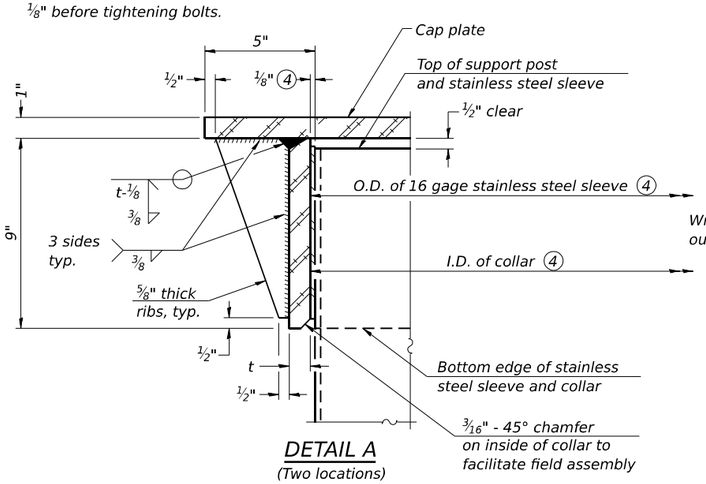

DETAIL A

(Two locations)

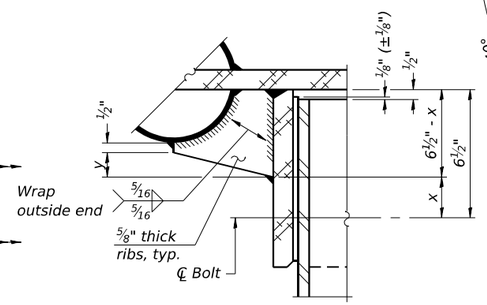

DETAIL B

Two locations
(For details not shown, see Detail C)

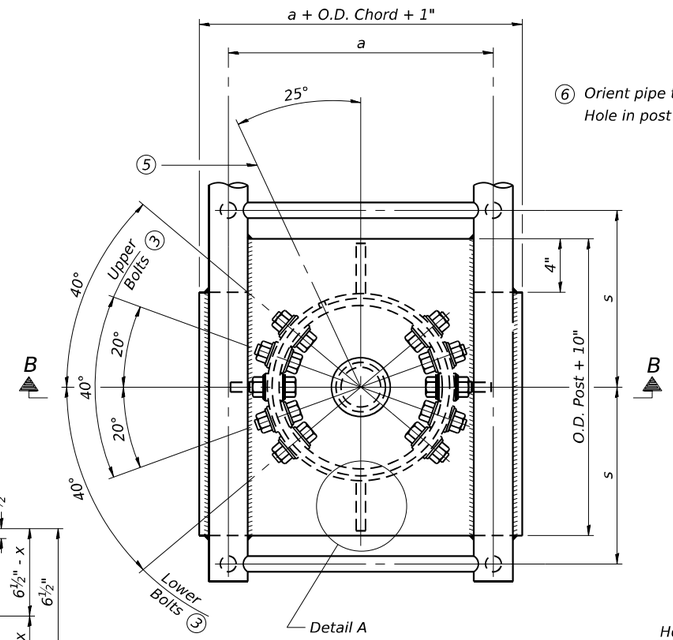

(5) Optional full penetration weld in collar.
(Two locations maximum....(180° apart)....X-ray or UT 100%)

(6) Orient pipe toward walkway side. Hole in post = O.D. pipe + ⅛".

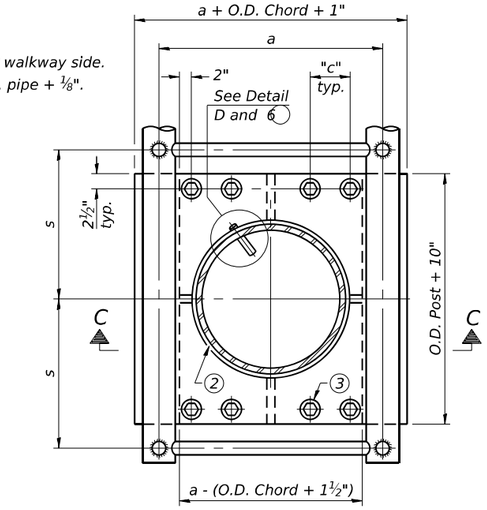

SECTION THRU POST ABOVE LOWER CHORDS

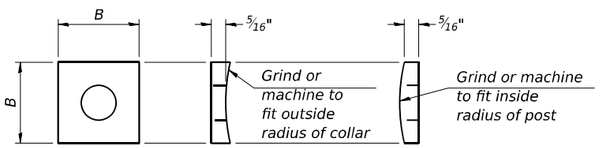

CONTOURED WASHERS

Bolt Size	Contoured Washers	
	Hole Dia.	B
⅞"	1"	2½"
1"	1⅛"	3"
1¼"	1⅜"	3¼"

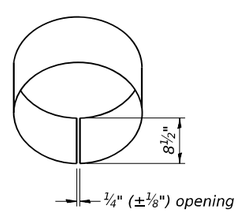

DETAIL OF STAINLESS STEEL SLEEVE

Weld to post after galvanizing.
(Prepare post surface to insure tight, uniform fit and allow welding.)
Welds to be 1½" long at 6" cts. along top edge and at ¼" opening.

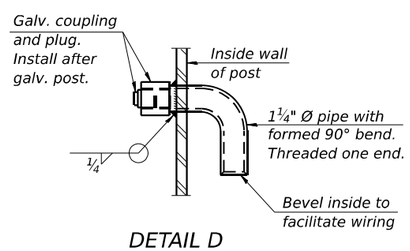

DETAIL D

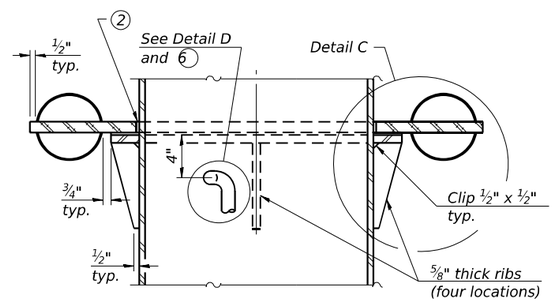

SECTION C-C

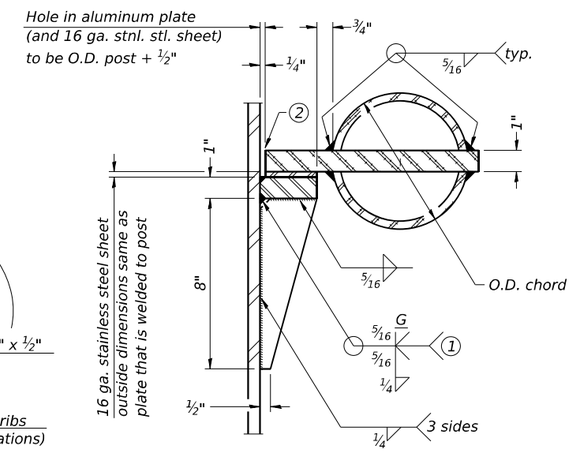

DETAIL C

Truss Type	Post Size	Upper & Lower Connection Bolt Diameter (3)	Lower Juncture Bolt Spacing Dimension "c" (3)	Opening in Cap Plate "HH"	Collar Thickness (t)	Side Ribs	
						x	y
I-C-A	16" Ø (83#/ ')	⅞"	3¼"	8"	⅝"	1¾"	2¼"
II-C-A	24" Ø (125#/ ')	1"	3½"	12"	⅞"	2"	1¼"
III-C-A (35' max.)	24" Ø (125#/ ')	1¼"	3½"	12"	⅞"	2"	1"
III-C-A (>35' to 40')	24" Ø (171#/ ')	1¼"	3½"	12"	⅞"	2"	1"

(1) Grind top if required to fully seat aluminum plate and stainless steel sheet.

(2) After tightening lower connection bolts, fill gap with non-hardening, silicone caulk suitable for exterior exposure and acceptable to the Engineer. Cost is included in Overhead Sign Structure Cantilever.

(3) Upper and lower connection bolts in collar and bolts at lower chord connection shall be high strength with matching locknuts. Connection bolts shall have 2 stainless steel flat washers each.

OSC-A-3 5-15-2023

WSP USA Inc.
30 N. LASALLE STREET
SUITE 4200
CHICAGO, IL 60602
TEL: (312) 782-8150
FAX: (312) 782-1684

USER NAME = USSJ696614	DESIGNED - SJJ	REVISED -	
	CHECKED - PJL	REVISED -	
PLOT SCALE = 0.167 ' / in.	DRAWN - SJJ	REVISED -	
PLOT DATE = 11/5/2025	CHECKED - PJL	REVISED -	

STATE OF ILLINOIS
DEPARTMENT OF TRANSPORTATION

CANTILEVER SIGN STRUCTURES - JUNCTURE DETAILS
ALUMINUM TRUSS & STEEL POST

SHEET 12 OF 15 SHEETS

F.A.I RTE.	SECTION	COUNTY	TOTAL SHEETS	SHEET NO.
I-80	FAI 80 21 STRUCTURE 2	WILL	1230	472
		CONTRACT NO. 62R23		
		ILLINOIS	FED. AID PROJECT	

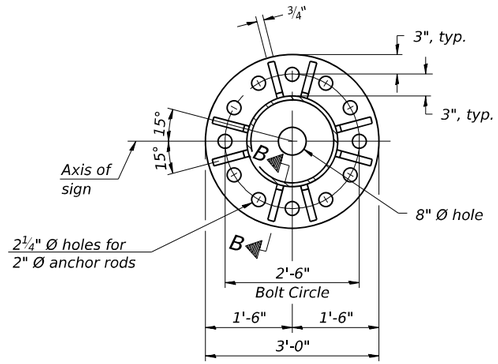

SECTION A-A

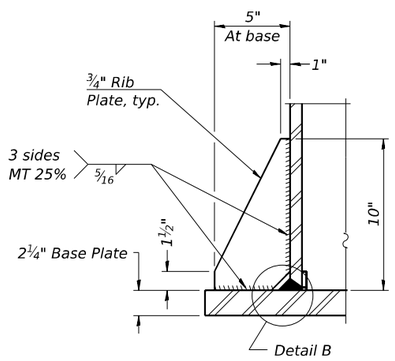

SECTION B-B

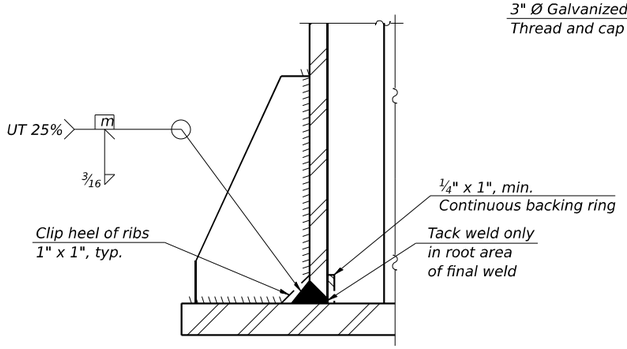

DETAIL B

(Typical rib)

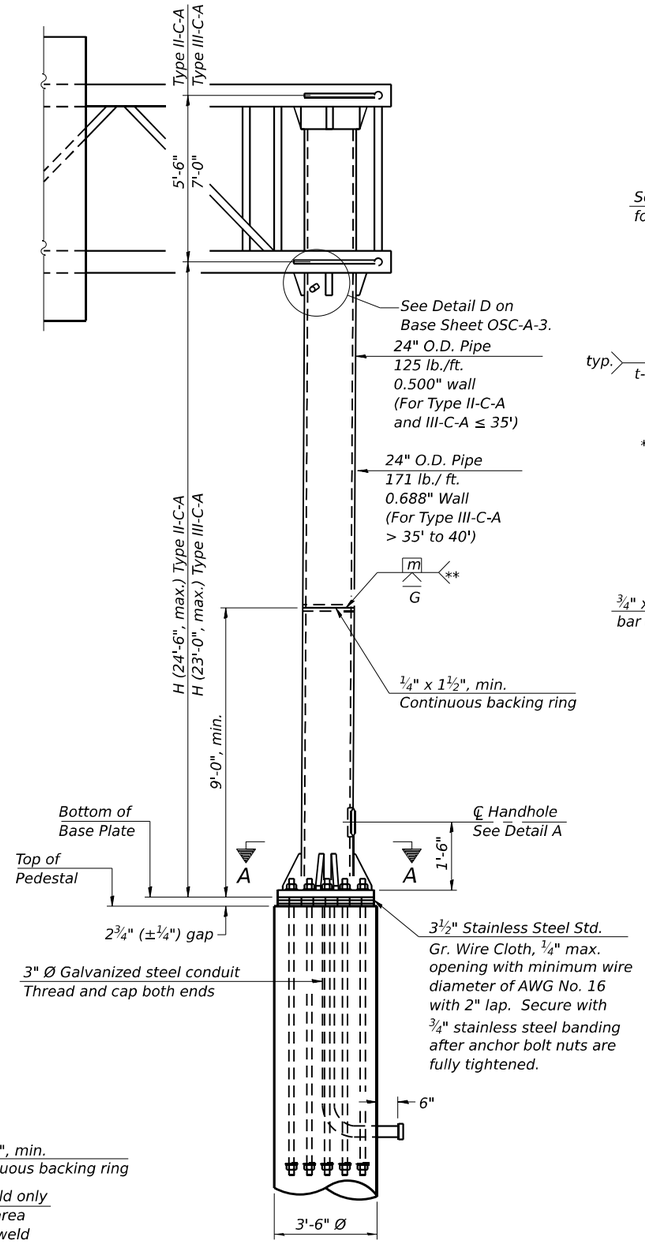

FRONT ELEVATION

For Pedestal Details, see Bridge Plans

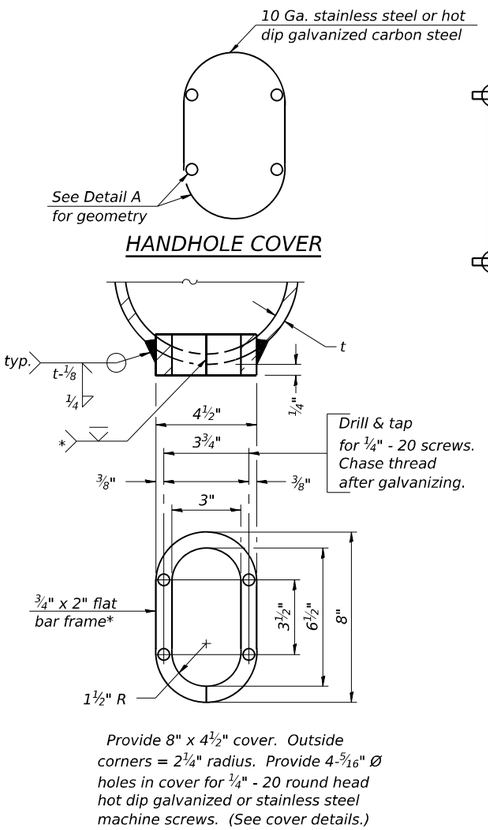

HANDHOLE COVER

Provide 8" x 4 1/2" cover. Outside corners = 2 1/4" radius. Provide 4-5/16" Ø holes in cover for 1/4" - 20 round head hot dip galvanized or stainless steel machine screws. (See cover details.)

DETAIL A

* Bent bars may be butt welded top and bottom or bottom only. In lieu of fabricated handhole frame as shown, may cut from 2" plate (rolling direction vertical). All cut faces to be ground to ANSI Roughness of 500μ in or less.

** Butt welded joint in post is only allowed for post heights (H) over 20 ft. in length. If used, weld procedure must be preapproved by Engineer and joint shall receive 100% RT or UT (tension criteria) at Contractor's expense.

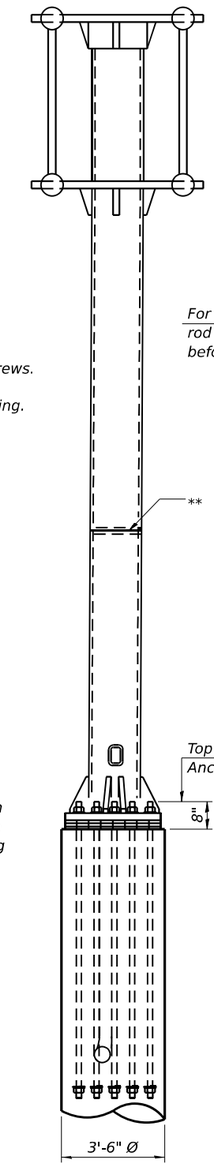

SIDE ELEVATION

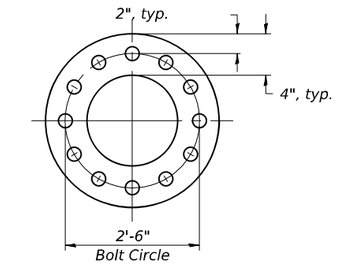

SUGGESTED POSITIONING PLATE

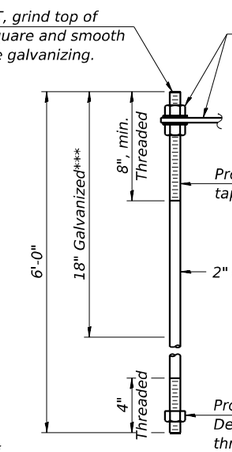

*** 18" is minimum to be galvanized. Entire rod may be galvanized at Contractor's option.

All Thread = NC (National Coarse)

ANCHOR ROD DETAIL

Anchor rods shall conform to ASTM F1554 Grade 105. Galvanize the upper 18" (minimum***) and associated AASHTO M291, Grade A, C or DH heavy hex nuts and hardened washers per AASHTO M232. No welding shall be permitted on rods. Provide a nut at bottom, a hexagon locknut and washer above base plate and a leveling nut and washer below base plate. Nuts shall each be tightened with 200 lb.-ft. minimum torque against base plate. Before or after threading, but before galvanizing, each anchor rod shall be ultrasonically tested (UT) by a Level II or III inspector, qualified in accord with ANSI guidelines, to insure no rejectable flaws exist in the upper 18" (tension criteria). Cost of testing included in Concrete Structures, see Bridge Plans.

Structure Number	Station	H
1C099I080L132.5	52+10	23'-7 3/4"

Note: "H" based on 15'-0" or actual sign height, whichever is greater.

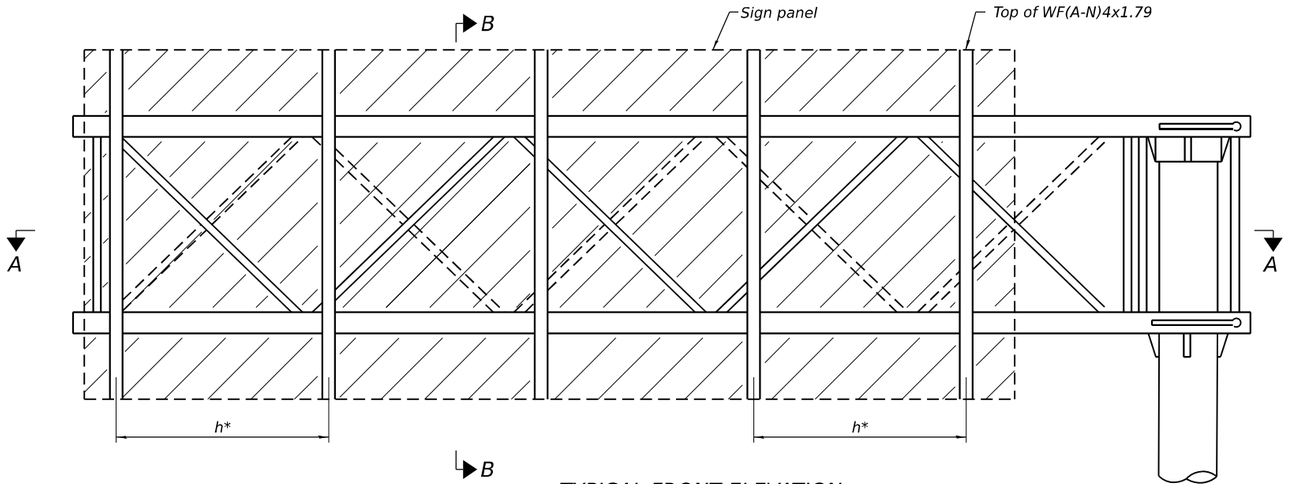

TYPICAL FRONT ELEVATION

BRACKET TABLE

WF(A-N)4x1.79 ASTM B308, Alloy 6061-T6		
Sign Width		Number Brackets Required
Greater Than	Less Than or Equal To	
	8'-0"	2
8'-0"	14'-0"	3
14'-0"	20'-0"	4
20'-0"	26'-0"	5
26'-0"	32'-0"	6

Structure Number	Station	TGL
1C099I80L132.5	52+10	29'-4 3/8"

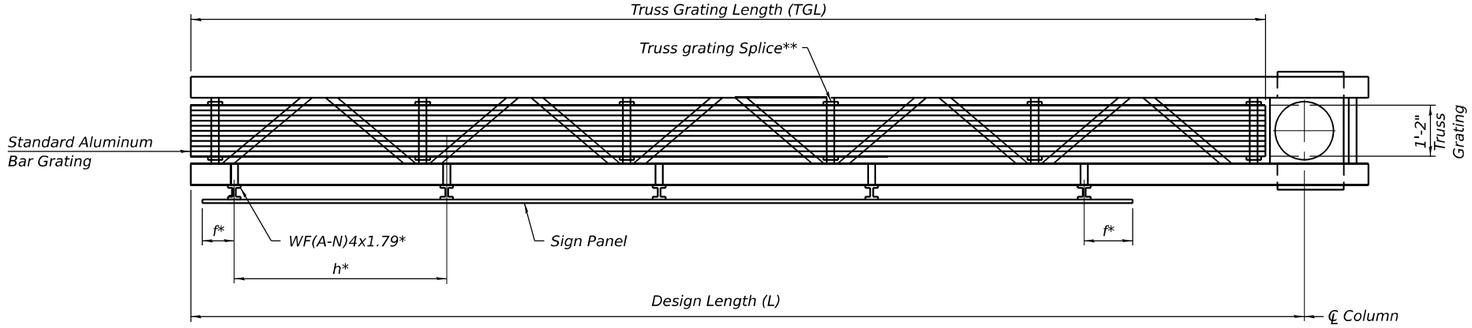

SECTION A-A

$$TGL = L - \left(\frac{\text{Post O.D.}}{2} + 6'' \right)$$

* Space sign brackets WF(A-N)4x1.79 for efficiency and within limits shown:

f = 12" maximum, 4" minimum (End of sign to ¡ of nearest bracket)
h = 6'-0" maximum (¡ to ¡ sign support brackets, WF(A-N)4x1.79

** Use and location of grating splices are optional, based on lengths needed and material availability.

Notes:
For details of sign placement, sign brackets, truss gratings, grating splices, and Section B-B, see Base Sheet OSC-A-7-NW.
Truss grating to facilitate inspection shall run full length of cantilevers. Cost of truss grating is included in Overhead Sign Structure Cantilever.
Truss grating dimensions are nominal and may vary (width ½"±, depth ½"±) based on available standard widths.

OSC-A-6-NW 5-15-2023

MODEL: Default
FILE NAME: pw://transystems-pw.bentley.com:transyscorp-pw1-hosted/Documents/Projects_2018/CH401/401180022/03-WSP/CAD/62R23-IB-LiSheets/Sign Structures/D162R23-OHS206.dgn

WSP USA Inc.
30 N. LASALLE STREET
SUITE 4200
CHICAGO, IL 60602
TEL: (312) 782-8150
FAX: (312) 782-1684

USER NAME = USSJ696614	DESIGNED - SJJ	REVISED -	
	CHECKED - PJL	REVISED -	
PLOT SCALE = 0.167 ' / in.	DRAWN - SJJ	REVISED -	
PLOT DATE = 11/6/2025	CHECKED - PJL	REVISED -	

STATE OF ILLINOIS
DEPARTMENT OF TRANSPORTATION

CANTILEVER SIGN STRUCTURES - ALUMINUM WALKWAY
DETAILS - ALUMINUM TRUSS & STEEL POST

SHEET 14 OF 15 SHEETS

F.A.I RTE.	SECTION	COUNTY	TOTAL SHEETS	SHEET NO.
I-80	FAI 80 21 STRUCTURE 2	WILL	1230	474
		CONTRACT NO. 62R23		
		ILLINOIS	FED. AID PROJECT	

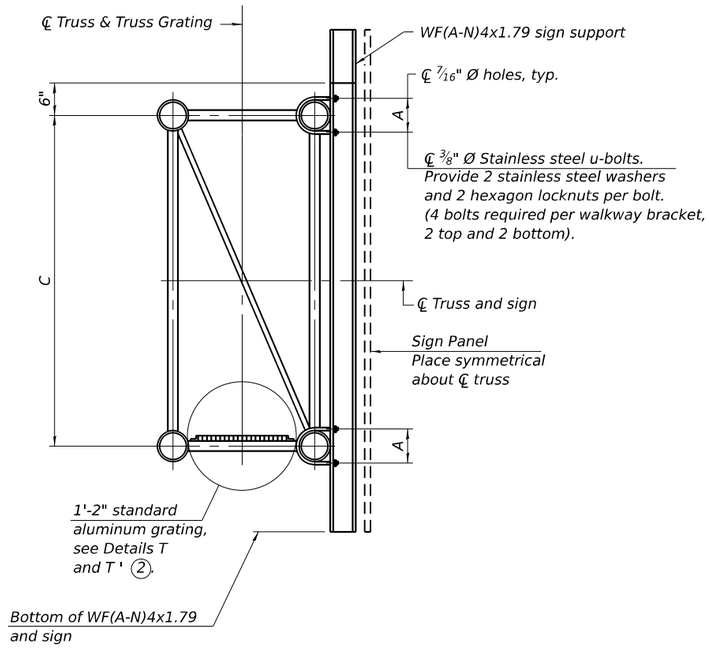

SECTION B-B

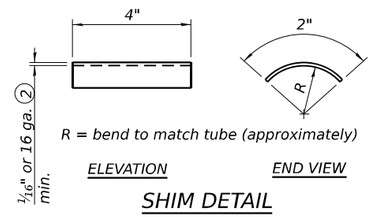

SHIM DETAIL

(1) Drilling holes in grating may be done in shop or field, based on Contractor's preference and subject to accurate alignment.

(2) Stainless steel shims shall be placed as shown in Detail T if needed to compensate for alignment variations between horizontal and diagonal pipes beyond adjustment provided by angles. Thicker shims may be used subject to shims performing properly.

(3) Tube to grating gap may vary from 0 to 1/2", max. to align walkway, allow for camber, etc.

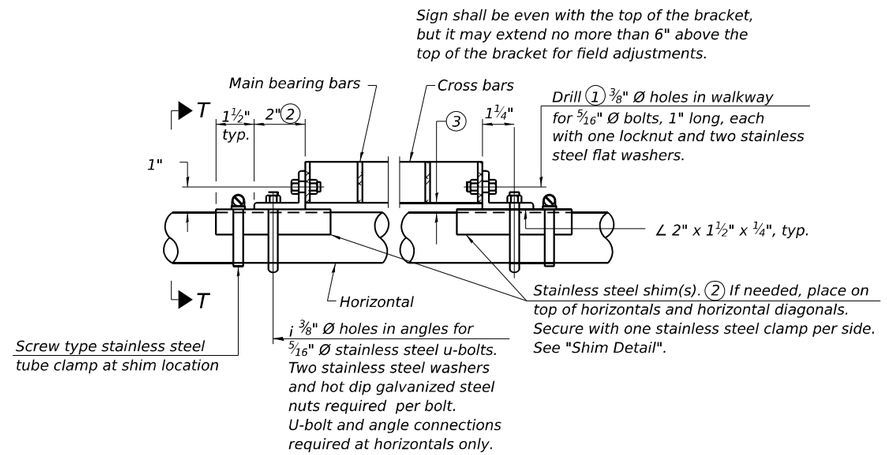

DETAIL T

(Continuous Truss grating)

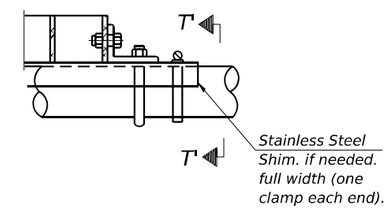

DETAIL T '

(Truss grating splice)
Details not shown same as Detail T.
Alternate materials may be used subject to the Engineer's review and approval.

SPECIFICATIONS FOR STANDARD ALUMINUM GRATING

Main Bearing Bars (MBB) shall be 3/16" x 1 1/2" on 1 3/16" centers and conform to ASTM B211 Alloy 6061-T6.

Cross bars (CB) shall be 3/16" x 1 1/2" on 4" centers and conform to ASTM B221 Alloy 6063-T5 or 6061-T6.

OR

Aluminum Grating with modified "t" sections for main bearing bars shall meet the following requirements:

Main bars shall conform to ASTM B221 Alloy 6061-T6 and have a minimum section modulus equal to 0.0705 in.³ per bar, a depth of 1 1/2", spaced on 1 3/16" centers.

Cross bars shall conform to ASTM B221 Alloy 6063-T5 or T-42 and spaced on 4" centers.

Structure Number	Station	A	C
1C099I80L132.5	52+10	3 5/8"	5'-6"

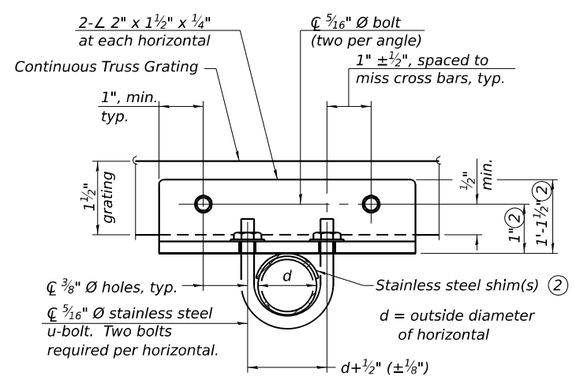

SECTION T-T

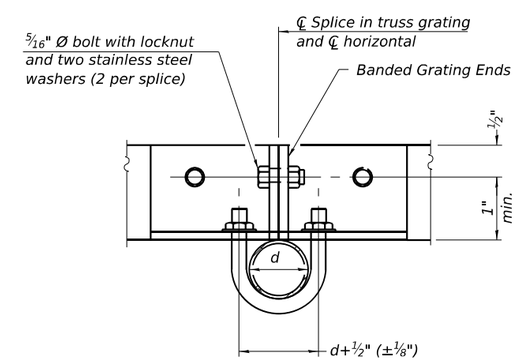

SECTION T '-T '

OSC-A-7-NW 5-15-2023

WSP USA Inc.
30 N. LASALLE STREET
SUITE 4200
CHICAGO, IL 60602
TEL: (312) 782-8150
FAX: (312) 782-1684

USER NAME = USSJ696614	DESIGNED - SJJ	REVISED -	
	CHECKED - PJL	REVISED -	
PLOT SCALE = 0.167 ' / in.	DRAWN - SJJ	REVISED -	
PLOT DATE = 11/6/2025	CHECKED - PJL	REVISED -	

STATE OF ILLINOIS
DEPARTMENT OF TRANSPORTATION

CANTILEVER SIGN STRUCTURES - WALKWAY DETAILS
ALUMINUM TRUSS & STEEL POST

SHEET 15 OF 15 SHEETS

F.A.I RTE.	SECTION	COUNTY	TOTAL SHEETS	SHEET NO.
I-80	FAI 80 21 STRUCTURE 2	WILL	1230	475
		CONTRACT NO. 62R23		
		ILLINOIS	FED. AID PROJECT	

MODEL: Default
FILE NAME: pw://transystems-pw.bentley.com:transyscorp-pw1-hosted/Documents/Projects_2018/CH401/401180022/03-WSP/CAD/62R23-RB-1/Sheets/Sign Structures/D162R23-CHS207.dgn

LANDSCAPING SCHEDULE

LOCATION	STATION	SEEDING, CLASS 1A	NITROGEN FERTILIZER NUTRIENT	POTASSIUM FERTILIZER NUTRIENT	EROSION CONTROL BLANKET
		ACRE	POUND	POUND	SQ YD
RIVER ST	100+50 TO 105+50	0.36	32	32	1720
RIVER ST	105+50 TO 112+00	2.43	218	218	11748
KIEP AVE/DUNCAN ST	NO ALIGNMENT	1.76	158	158	8513
WATER ST	301+00 TO 305+50	1.28	115	115	6183
WATER ST/RIVER ST	305+50 TO 307+82	1.56	141	141	7573
LUCAS ST	401+50 TO 403+96	0.67	60	60	3223
JOLIET ST – SOUTH	601+00 TO 603+00	0.04	4	4	195
JOLIET ST - NORTH	700+00 TO 701+00	0.03	3	3	148
US RTE 6	214+54 TO 218+00	0.06	5	5	284
US RTE 6	217+00 TO 221+42	0.07	6	6	341
CHERRY ST	501+00 TO 505+00	0.08	7	7	389
US RTE 6	226+15 to 230+50	0.12	11	11	576
US RTE 6	230+50 to 233+22	0.04	3	3	188
TOTAL		8.50	764	764	41080

TOPSOIL SUMMARY

LOCATION	STATION	TOPSOIL (SEE NOTE 3)	TOPSOIL PLACEMENT (4") (SEE NOTE 4)	TOPSOIL BALANCE WASTE (+) OR SHORTAGE (-) (SEE NOTE 4)
		CU YD	CU YD	CU YD
RIVER ST	100+50 TO 105+50		191.1	951.9
RIVER ST	105+50 TO 112+00		1305.4	-353.5
KIEP AVE/DUNCAN ST	NO ALIGNMENT		945.9	-1299.4
WATER ST	301+00 TO 305+50		687.0	-1986.4
WATER ST/RIVER ST	305+50 TO 307+82		841.4	-2827.8
LUCAS ST	401+50 TO 403+96		358.1	-3185.9
JOLIET ST - SOUTH	601+00 TO 603+00	1143	21.7	-3207.6
JOLIET ST - NORTH	700+00 TO 701+00		16.5	-3224.0
US RTE 6	214+54 TO 218+00		31.5	-3255.5
US RTE 6	217+00 TO 221+42		37.8	-3293.4
CHERRY ST	501+00 TO 505+00		43.2	-3336.6
US RTE 6	226+15 to 230+50		63.9	-3400.5
US RTE 6	230+50 to 233+22		20.9	-3421.4
TOTAL			4564.4	-3421.4

LANDSCAPING NOTES:

1. VILLAGE WATER AND SEWER MAINS MAY BE LOCATED IN THE LANDSCAPE AREA. THE CONTRACTOR SHALL NOT BE ALLOWED TO PROCEED WITH ANY PLANTING WORK UNTIL ALL UTILITY OWNERS FIELD LOCATE THEIR FACILITIES WHICH MAY INTERFERE WITH CONSTRUCTION OPERATIONS. THE ACTUAL LOCATION OF PROPOSED LANDSCAPING WILL BE ADJUSTED IN THE FIELD TO AVOID UTILITIES.
2. UNDERBRUSH OR DEBRIS AT PLANTING LOCATIONS SHALL BE REMOVED AND DISPOSED OF ACCORDING TO SECTION 201 OF THE STANDARD SPECIFICATIONS. THIS WORK WILL NOT BE PAID FOR SEPARATELY, BUT THE COSTS SHALL BE CONSIDERED AS INCLUDED IN THE CONTRACT UNIT PRICES FOR THE CONSTRUCTION ITEMS INVOLVED, AND NO ADDITIONAL COMPENSATION WILL BE ALLOWED.
3. TOPSOIL QUANTITY IS CALCULATED IN THE EARTHWORK SCHEDULE ON SHEET
4. NOT A PAY ITEM

LANDSCAPING LEGEND

SEEDING, CLASS 1A,
EROSION CONTROL BLANKET,
TOPSOIL EXCAVATION AND PLACEMENT
AND FERTILIZER NUTRIENTS

0 20 40 60
SCALE IN FEET

BEGIN ROADWAY IMPROVEMENT STA. 100+50.00

MCKINLEY STREET

RIVER STREET

100+00 101 102 103 104 105+00

PR ℄ RIVER ST

DAVIS STREET

MATCHLINE STA. 105+50.00
SEE SHEET 478

KEY PLAN

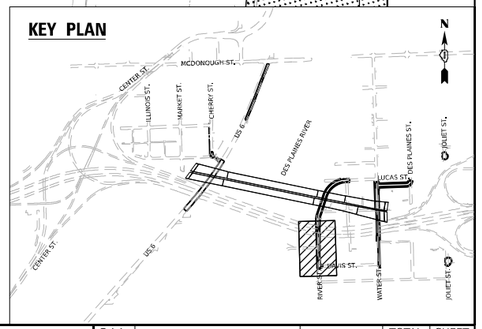

MODEL: Default
FILE NAME: pw://transystems-pw.bentley.com:transyscorp-pw1-hosted/Documents/Projects_2018/CH401/401180022/03-WSP/CAD/62R23-RB-1/Sheets/Civil/0162R23-sht-indscptLocalRoads-plan01.dgn

Accurate GROUP, INC.

USER NAME = jpioquinto	DESIGNED - JLS	REVISED -	
	DRAWN - AK	REVISED -	
PLOT SCALE = 40.000 ' / in.	CHECKED - AB	REVISED -	
PLOT DATE = 11/5/2025	DATE - 11/7/2025	REVISED -	

STATE OF ILLINOIS
DEPARTMENT OF TRANSPORTATION

LANDSCAPING PLAN
RIVER STREET

SCALE: 1"=20' | SHEET 1 OF 13 SHEETS | STA. 100+00 TO STA. 105+50

F.A.I. RTE.	SECTION	COUNTY	TOTAL SHEETS	SHEET NO.
80	FAI 80 21 STRUCTURE 2	WILL	1230	477
		CONTRACT NO. 62R23		
		ILLINOIS	FED. AID PROJECT	

LANDSCAPING LEGEND

SEEDING, CLASS 1A, EROSION CONTROL BLANKET, TOPSOIL EXCAVATION AND PLACEMENT AND FERTILIZER NUTRIENTS

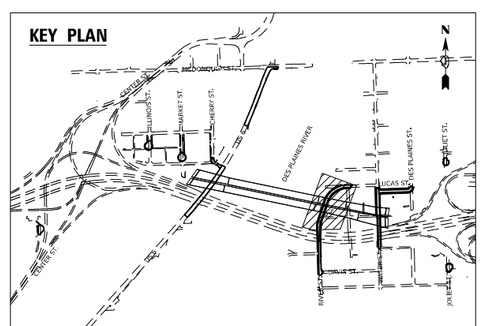

Accurate GROUP, INC.	USER NAME = jpioquinto	DESIGNED - JLS	REVISED -	STATE OF ILLINOIS DEPARTMENT OF TRANSPORTATION	LANDSCAPING PLAN RIVER STREET	F.A.I. RTE. 80	SECTION FAI 80 21 STRUCTURE 2
		DRAWN - AK	REVISED -				COUNTY WILL
	PLOT SCALE = 40.000 ' / in.	CHECKED - AB	REVISED -				TOTAL SHEETS 1230
	PLOT DATE = 11/5/2025	DATE - 11/7/2025	REVISED -		SCALE: 1"=20' SHEET 2 OF 13 SHEETS STA. 105+50 TO STA. 112+17		SHEET NO. 478
						CONTRACT NO. 62R23	
						ILLINOIS FED. AID PROJECT	

MODEL: Default
FILE NAME: pw://transystems-pw.bentley.com:transyscorp-pw1-hosted/Documents/Projects_2018/C-4401/401180022/03-WSP/CAD/62R23-Rb-1/Sheets/Civil/D162R23-sht-landscp-loc-Roadway-plan02.dgn

LANDSCAPING LEGEND

SEEDING, CLASS 1A,
EROSION CONTROL BLANKET,
TOPSOIL EXCAVATION AND PLACEMENT
AND FERTILIZER NUTRIENTS

0 20 40 60
SCALE IN FEET

KEY PLAN

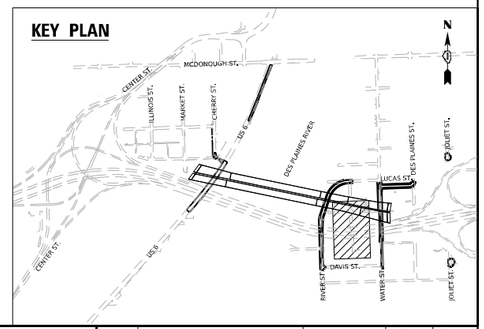

MODEL: Default
FILE NAME: pw://transystems-pw.bentley.com:transyscorp-pw1-hosted/Documents/Projects_2018/CH401/401180022/03-WSP/CAD/62R23-RB-1/Sheets/Civil/D62R23-sht-lnscpl-loc-Road-plan03.dgn

Accurate GROUP, INC.

USER NAME = jpioquinto	DESIGNED - JLS	REVISED -	
	DRAWN - AK	REVISED -	
PLOT SCALE = 40.000 ' / in.	CHECKED - AB	REVISED -	
PLOT DATE = 11/5/2025	DATE - 11/7/2025	REVISED -	

STATE OF ILLINOIS
DEPARTMENT OF TRANSPORTATION

LANDSCAPING PLAN
KIEP AVE

SCALE: 1"=20' | SHEET 3 OF 13 SHEETS | STA. 800+00 TO STA. 804+28

F.A.I. RTE.	SECTION	COUNTY	TOTAL SHEETS	SHEET NO.
80	FAI 80 21 STRUCTURE 2	WILL	1230	479
		CONTRACT NO. 62R23		
	ILLINOIS	FED. AID PROJECT		

LANDSCAPING LEGEND

SEEDING, CLASS 1A,
EROSION CONTROL BLANKET,
TOPSOIL EXCAVATION AND PLACEMENT
AND FERTILIZER NUTRIENTS

0 20 40 60
SCALE IN FEET

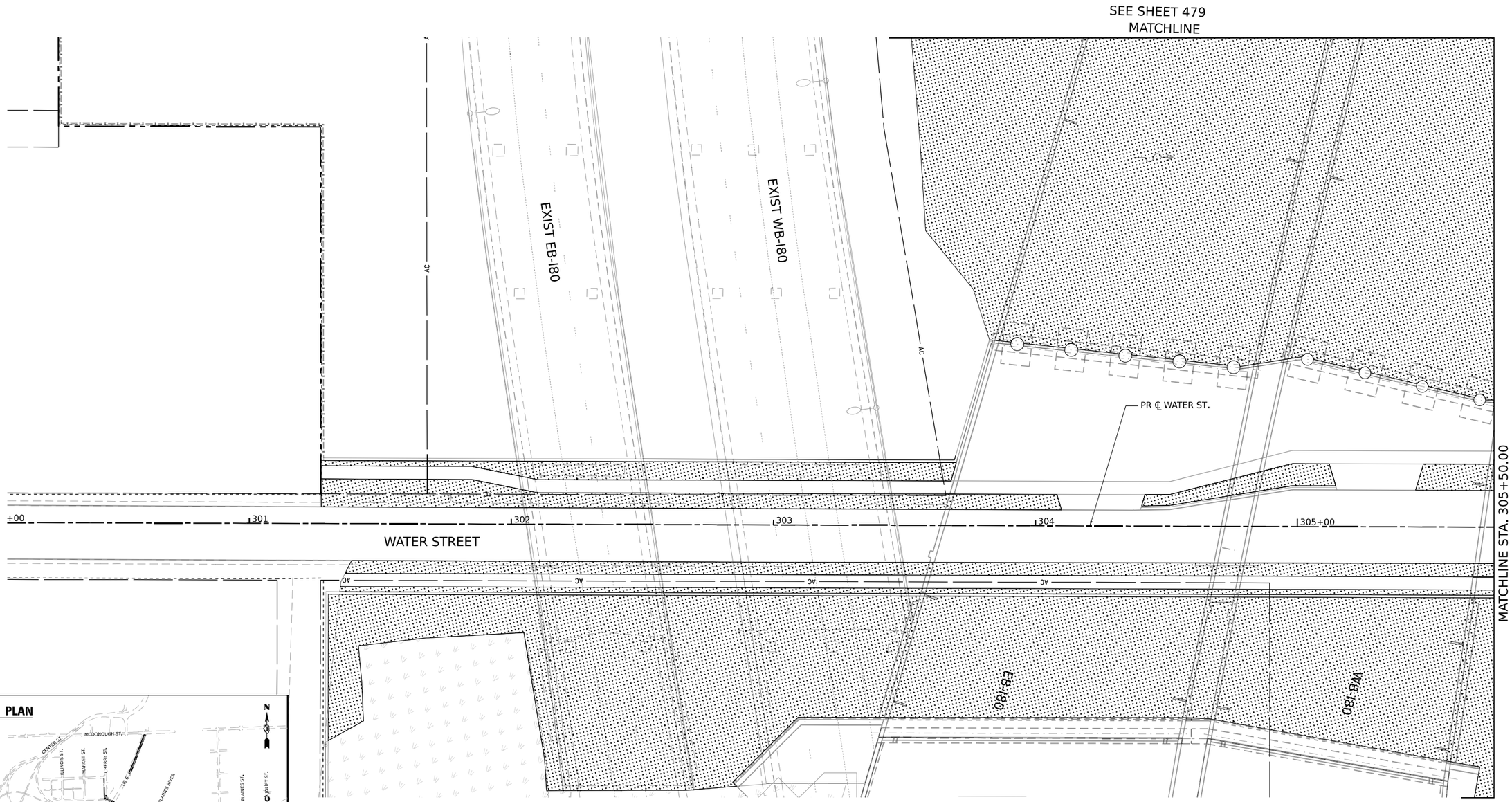

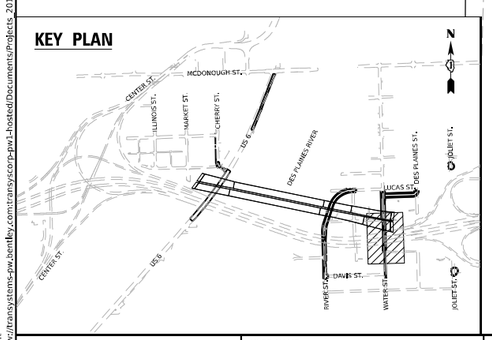

MODEL: Default
FILE NAME: pw://transystems-pw.bentley.com:transyscorp-pw1-hosted/Documents/Projects_2018/C-I401/401180022/03-WSP/CAD/62R23-Rb-1/Sheets/Civil/D162R23-sht-lnscplocalRoads-plan04.dgn

Accurate GROUP, INC.	USER NAME = jpioquinto	DESIGNED - JLS	REVISED -	STATE OF ILLINOIS DEPARTMENT OF TRANSPORTATION	LANDSCAPING PLAN WATER STREET	F.A.I. RTE.	SECTION	COUNTY	TOTAL SHEETS / SHEET NO.
		DRAWN - AK	REVISED -			80	FAI 80 21 STRUCTURE 2	WILL	1230 / 480
	PLOT SCALE = 40.000 ' / in.	CHECKED - AB	REVISED -					CONTRACT NO. 62R23	
	PLOT DATE = 11/5/2025	DATE - 11/7/2025	REVISED -		SCALE: 1"=20' SHEET 4 OF 13 SHEETS STA. 299+92 TO STA. 305+50		ILLINOIS	FED. AID PROJECT	

SEE SHEET 478
MATCHLINE STA. 112+00.00

LANDSCAPING LEGEND

SEEDING, CLASS 1A,
EROSION CONTROL BLANKET,
TOPSOIL EXCAVATION AND PLACEMENT
AND FERTILIZER NUTRIENTS

0 20 40 60
SCALE IN FEET

END ROADWAY IMPROVEMENT STA. 112+17.00

112

113

114

RIVER STREET

PR ℄ RIVER ST.

PR ℄ WATER ST.

SHERIDAN STREET

115+00

306 307 308 309 310+00

WATER STREET

400+00

END ROADWAY IMPROVEMENT STA. 307+82.73

SEE SHEET 480
MATCHLINE STA. 305+50.00

MATCHLINE STA. 400+50.00
SEE SHEET 482

KEY PLAN

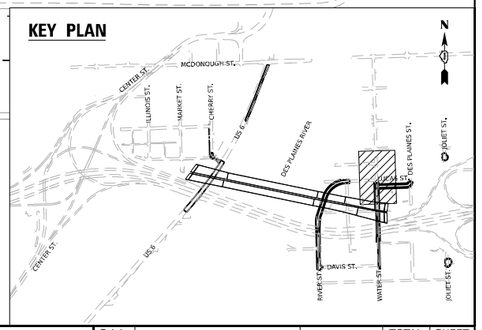

MODEL: Default
FILE NAME: pw://transystems-pw.bentley.com:transyscorp-pw1-hosted/Documents/Projects_2018/CH401/401180022/03-WSP/CAD/62R23-RB-1/Sheets/Civil/0162R23-sht-lndscpl.dgn/Roads-plan05.dgn

Accurate GROUP, INC.

USER NAME = jpioquinto	DESIGNED - JLS	REVISED -	
	DRAWN - AK	REVISED -	
PLOT SCALE = 40.000 ' / in.	CHECKED - AB	REVISED -	
PLOT DATE = 11/5/2025	DATE - 11/7/2025	REVISED -	

STATE OF ILLINOIS
DEPARTMENT OF TRANSPORTATION

LANDSCAPING PLAN
WATER STREET

SCALE: 1"=20' | SHEET 5 OF 13 SHEETS | STA. 305+50 TO STA. 309+93

F.A.I. RTE.	SECTION	COUNTY	TOTAL SHEETS	SHEET NO.
80	FAI 80 21 STRUCTURE 2	WILL	1230	481
		CONTRACT NO. 62R23		
	ILLINOIS	FED. AID PROJECT		

LANDSCAPING LEGEND

SEEDING, CLASS 1A,
EROSION CONTROL BLANKET,
TOPSOIL EXCAVATION AND PLACEMENT
AND FERTILIZER NUTRIENTS

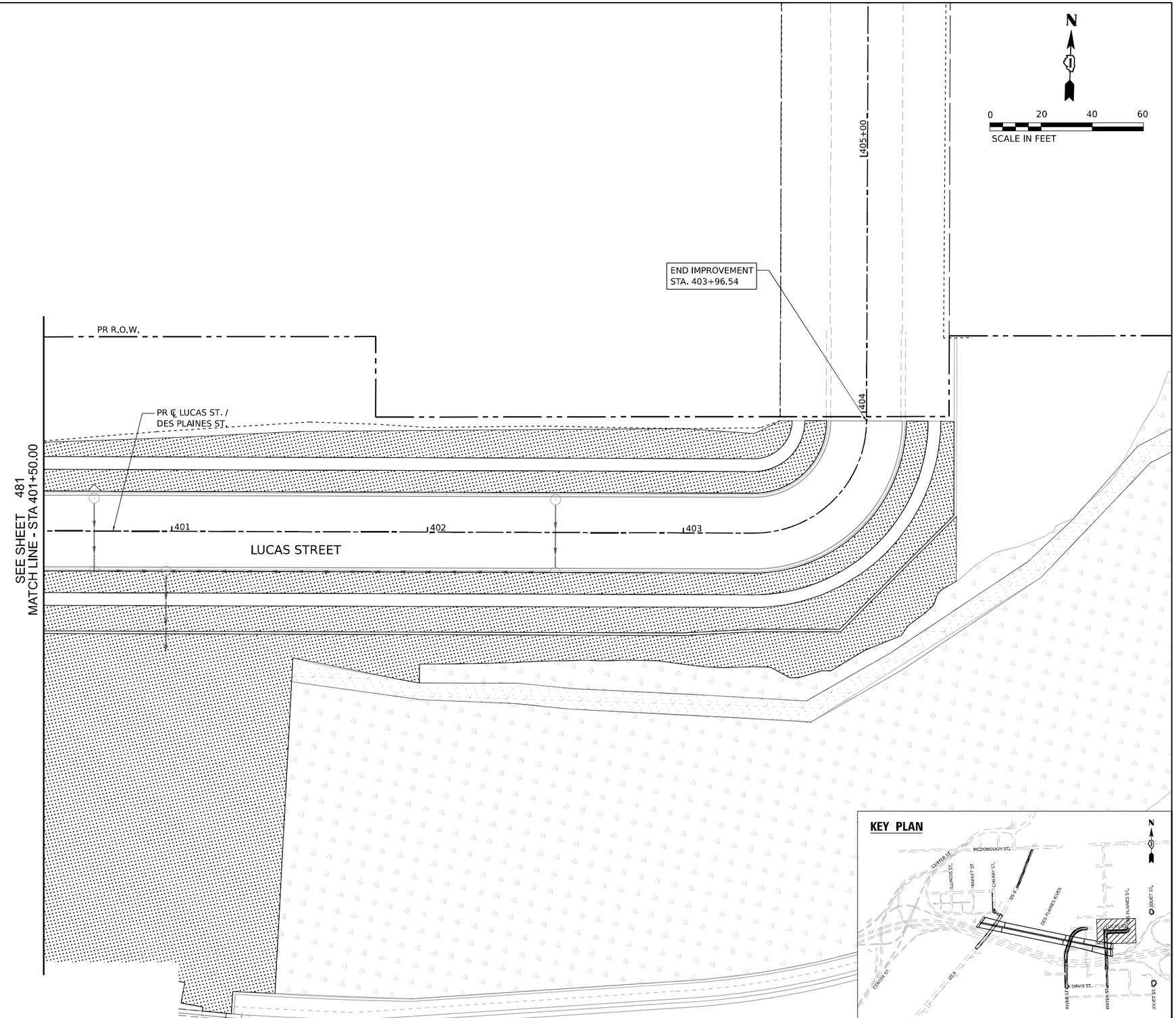

MODEL: Default
FILE NAME: pw://transystems-pw.bentley.com:transyscorp-pw1-hosted/Documents/Projects_2018/CH401/401180022/03-WSP/CAD/62R23-RB-1/Sheets/Civil/D162R23-sht-lndscpn-ocl-Roads-plan06.dgn

Accurate GROUP, INC.

USER NAME = jpioquinto	DESIGNED - JLS	REVISED -	
	DRAWN - AK	REVISED -	
PLOT SCALE = 40.000 ' / in.	CHECKED - AB	REVISED -	
PLOT DATE = 11/5/2025	DATE - 11/5/2025	REVISED -	

STATE OF ILLINOIS
DEPARTMENT OF TRANSPORTATION

LANDSCAPING PLAN
LUCAS STREET

SCALE: 1"=20' | SHEET 6 OF 12 SHEETS | STA. 400+00 TO STA. 403+97

F.A.I. RTE.	SECTION	COUNTY	TOTAL SHEETS	SHEET NO.
80	FAI 80 21 STRUCTURE 2	WILL	1230	482
		CONTRACT NO. 62R23		
		ILLINOIS	FED. AID PROJECT	

LANDSCAPING LEGEND

SEEDING, CLASS 1A,
EROSION CONTROL BLANKET,
TOPSOIL EXCAVATION AND PLACEMENT
AND FERTILIZER NUTRIENTS

0 20 40 60
SCALE IN FEET

SOUTH STREET

JOLIET STREET

600+00 601 602

PR ℄ JOLIET ST. SOUTH

BEGIN ROADWAY
IMPROVEMENT
STA. 601+39.54

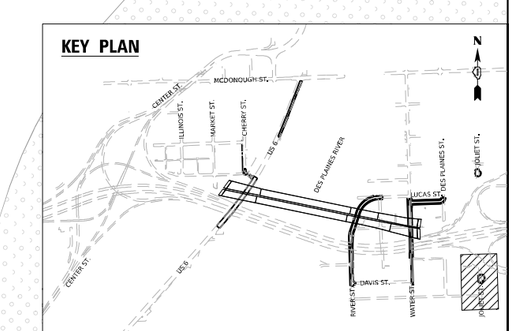

MODEL: Default
FILE NAME: pw://transystems-pw.bentley.com:transyscorp-pw1-hosted/Documents/Projects_2018/CH401/118002/03-WSP/CAD/62R23-RB-1/Sheets/Civil/0162R23-sht-indscplocalRoads-plan07.dgn

Accurate GROUP, INC.

USER NAME = jpioquinto	DESIGNED - JLS	REVISED -	
	DRAWN - AK	REVISED -	
PLOT SCALE = 40.000 ' / in.	CHECKED - AB	REVISED -	
PLOT DATE = 11/5/2025	DATE - 11/7/2025	REVISED -	

STATE OF ILLINOIS
DEPARTMENT OF TRANSPORTATION

LANDSCAPING PLAN
JOLIET STREET – SOUTH

SCALE: 1"=20' | SHEET 7 OF 13 SHEETS | STA. 600+00 TO STA. 602+95

F.A.I. RTE.	SECTION	COUNTY	TOTAL SHEETS	SHEET NO.
80	FAI 80 21 STRUCTURE 2	WILL	1230	483
		CONTRACT NO. 62R23		
		ILLINOIS	FED. AID PROJECT	

LANDSCAPING LEGEND

SEEDING, CLASS 1A, EROSION CONTROL BLANKET, TOPSOIL EXCAVATION AND PLACEMENT AND FERTILIZER NUTRIENTS

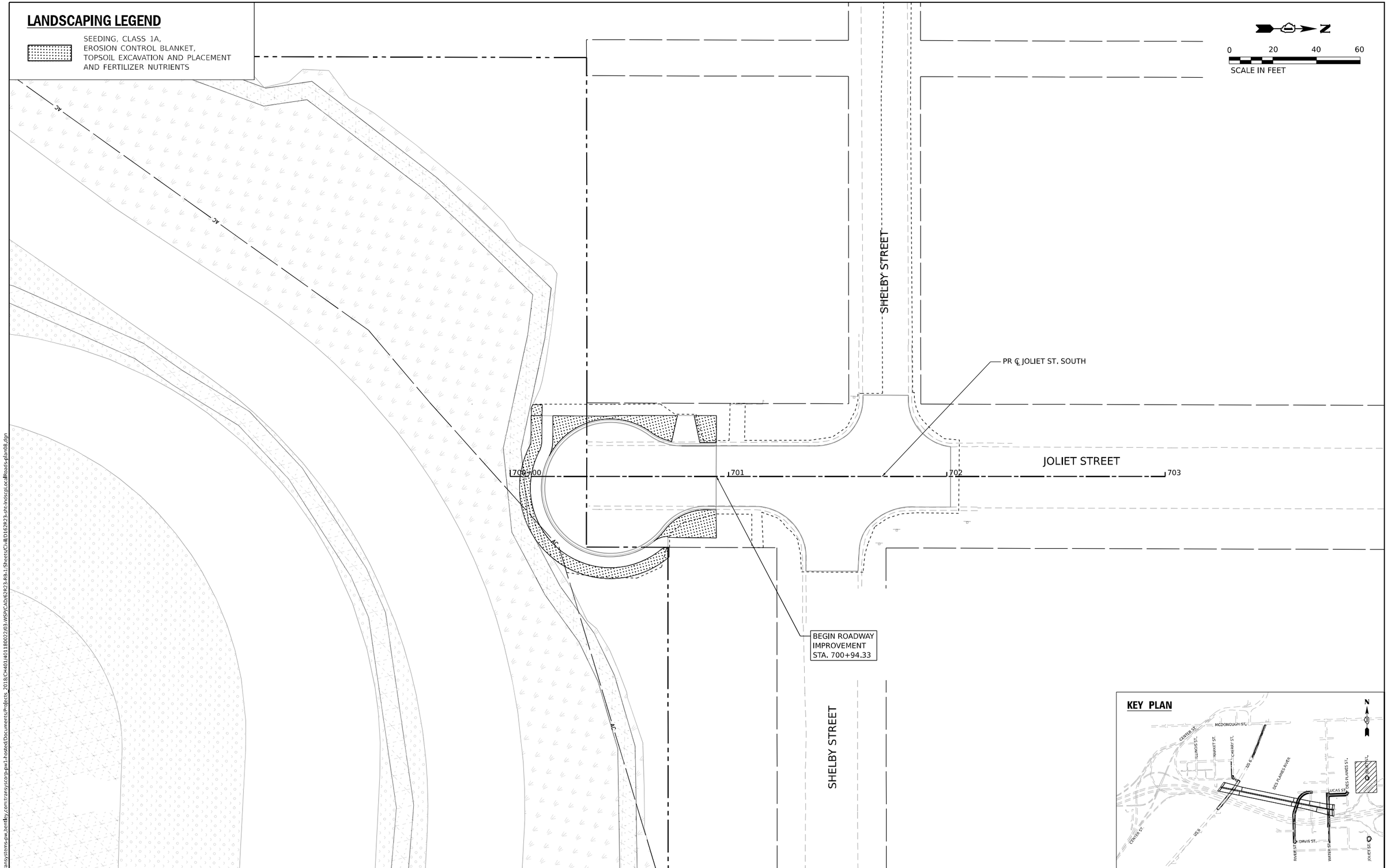

MODEL: Default
FILE NAME: pw://transystems-pw.bentley.com:transyscorp-pw1-hosted/Documents/Projects_2018/C-M401/401180022/03-WSP/CAD/62R23-Rb-1/Sheets/Civil/D162R23-sht-lnscpl.ocalRoads-plan08.dgn

Accurate GROUP, INC.

USER NAME = jpioquinto	DESIGNED - JLS	REVISED -	
	DRAWN - AK	REVISED -	
PLOT SCALE = 40.000 ' / in.	CHECKED - AB	REVISED -	
PLOT DATE = 11/5/2025	DATE - 11/7/2025	REVISED -	

STATE OF ILLINOIS
DEPARTMENT OF TRANSPORTATION

LANDSCAPING PLAN
JOLIET STREET – NORTH

SCALE: 1"=20' | SHEET 8 OF 13 SHEETS | STA. 700+00 TO STA. 703+00

F.A.I. RTE.	SECTION	COUNTY	TOTAL SHEETS	SHEET NO.
80	FAI 80 21 STRUCTURE 2	WILL	1230	484
		CONTRACT NO. 62R23		
	ILLINOIS	FED. AID PROJECT		

LANDSCAPING LEGEND

SEEDING, CLASS 1A,
EROSION CONTROL BLANKET,
TOPSOIL EXCAVATION AND PLACEMENT
AND FERTILIZER NUTRIENTS

N

0 20 40 60
SCALE IN FEET

EXIST EB I-80

EXIST WB I-80

AC

BEGIN ROADWAY
IMPROVEMENT
STA. 214+54.07

PR ℄ US 6

US 6

213

214

215+00

216

217

MATCHLINE STA. 218+00.00
SEE SHEET 486

STONE RIPRAP, CLASS A4

KEY PLAN

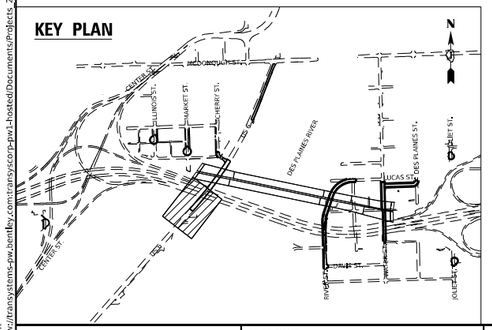

MODEL: Default
FILE NAME: pw://transystems-pw.bentley.com:transyscorp-pw1-hosted/Documents/Projects_2018/CH401/401180022/03-WSP/CAD/62R23-RB-1/Sheets/CH401D162R23-sht-lndscplocalRoads-plan09.dgn

Accurate GROUP, INC.	USER NAME = jpioquinto	DESIGNED - JLS	REVISED -	STATE OF ILLINOIS DEPARTMENT OF TRANSPORTATION	LANDSCAPING PLAN US–6	F.A.I. RTE.	SECTION	COUNTY	TOTAL SHEETS / SHEET NO.
		DRAWN - AK	REVISED -			80	FAI 80 21 STRUCTURE 2	WILL	1230 / 485
	PLOT SCALE = 40.000 ' / in.	CHECKED - AB	REVISED -					CONTRACT NO. 62R23	
	PLOT DATE = 11/5/2025	DATE - 11/7/2025	REVISED -		SCALE: 1"=20' SHEET 9 OF 15 SHEETS STA. 212+00 TO STA. 218+00			ILLINOIS FED. AID PROJECT	

LANDSCAPING LEGEND

SEEDING, CLASS 1A,
EROSION CONTROL BLANKET,
TOPSOIL EXCAVATION AND PLACEMENT
AND FERTILIZER NUTRIENTS

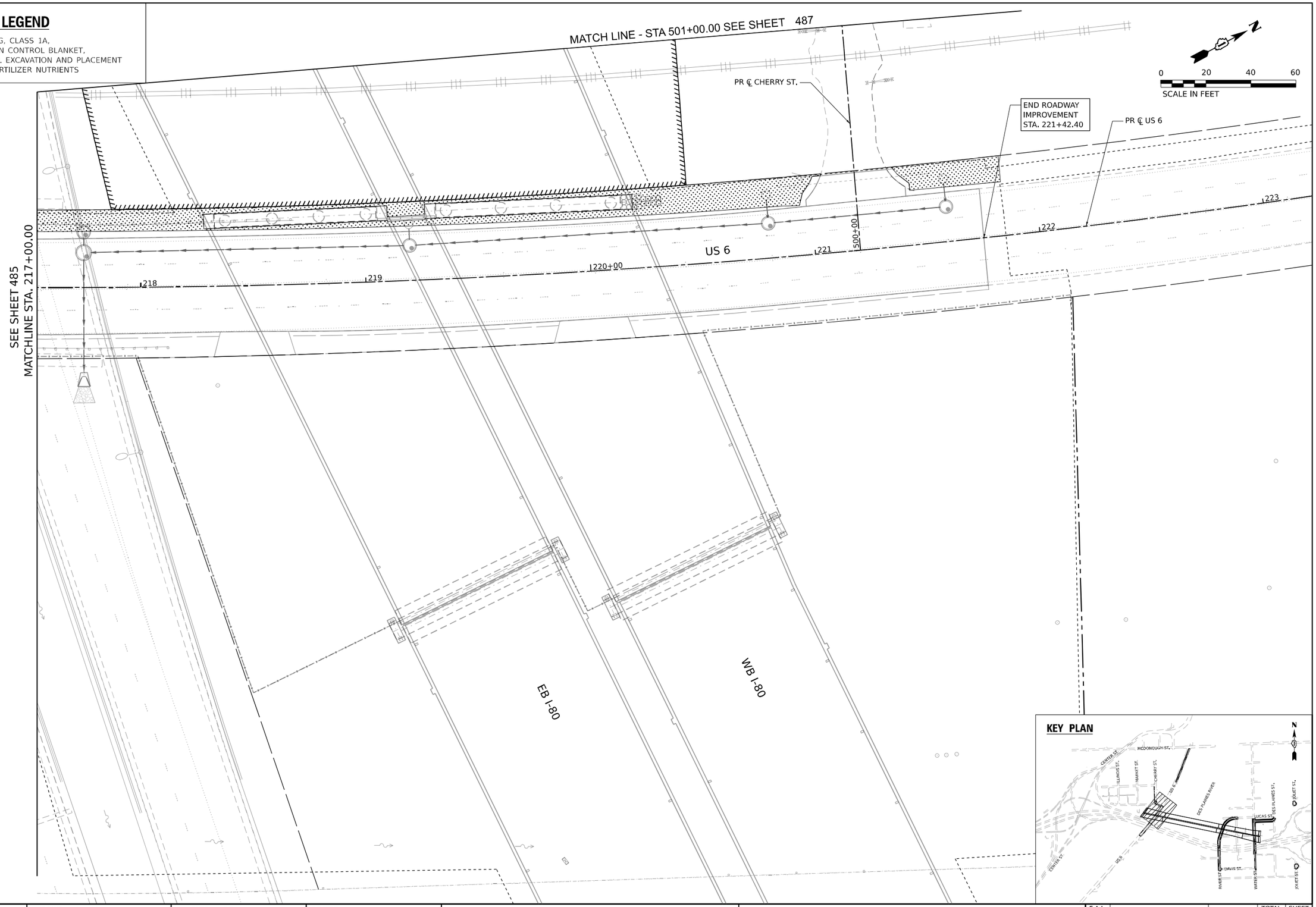

MODEL: Default
FILE NAME: pw://transystems-pw.bentley.com:transyscorp-pw1-hosted/Documents/Projects_2018/CH401/401180022/03-WSP/CAD/62R23-RB-1/Sheets/Civil/D162R23-sht-lndscplocd/Roads-plan10.dgn

Accurate GROUP, INC.

USER NAME = jpioquinto	DESIGNED - JLS	REVISED -	
	DRAWN - AK	REVISED -	
PLOT SCALE = 40.000 ' / in.	CHECKED - AB	REVISED -	
PLOT DATE = 11/5/2025	DATE - 11/7/2025	REVISED -	

STATE OF ILLINOIS
DEPARTMENT OF TRANSPORTATION

LANDSCAPING PLAN
US–6

SCALE: 1"=20' | SHEET 10 OF 15 SHEETS | STA. 217+00 TO STA. 223+22

F.A.I. RTE.	SECTION	COUNTY	TOTAL SHEETS	SHEET NO.
80	FAI 80 21 STRUCTURE 2	WILL	1230	486
		CONTRACT NO. 62R23		
	ILLINOIS	FED. AID PROJECT		

LANDSCAPING LEGEND

SEEDING, CLASS 1A,
EROSION CONTROL BLANKET,
TOPSOIL EXCAVATION AND PLACEMENT
AND FERTILIZER NUTRIENTS

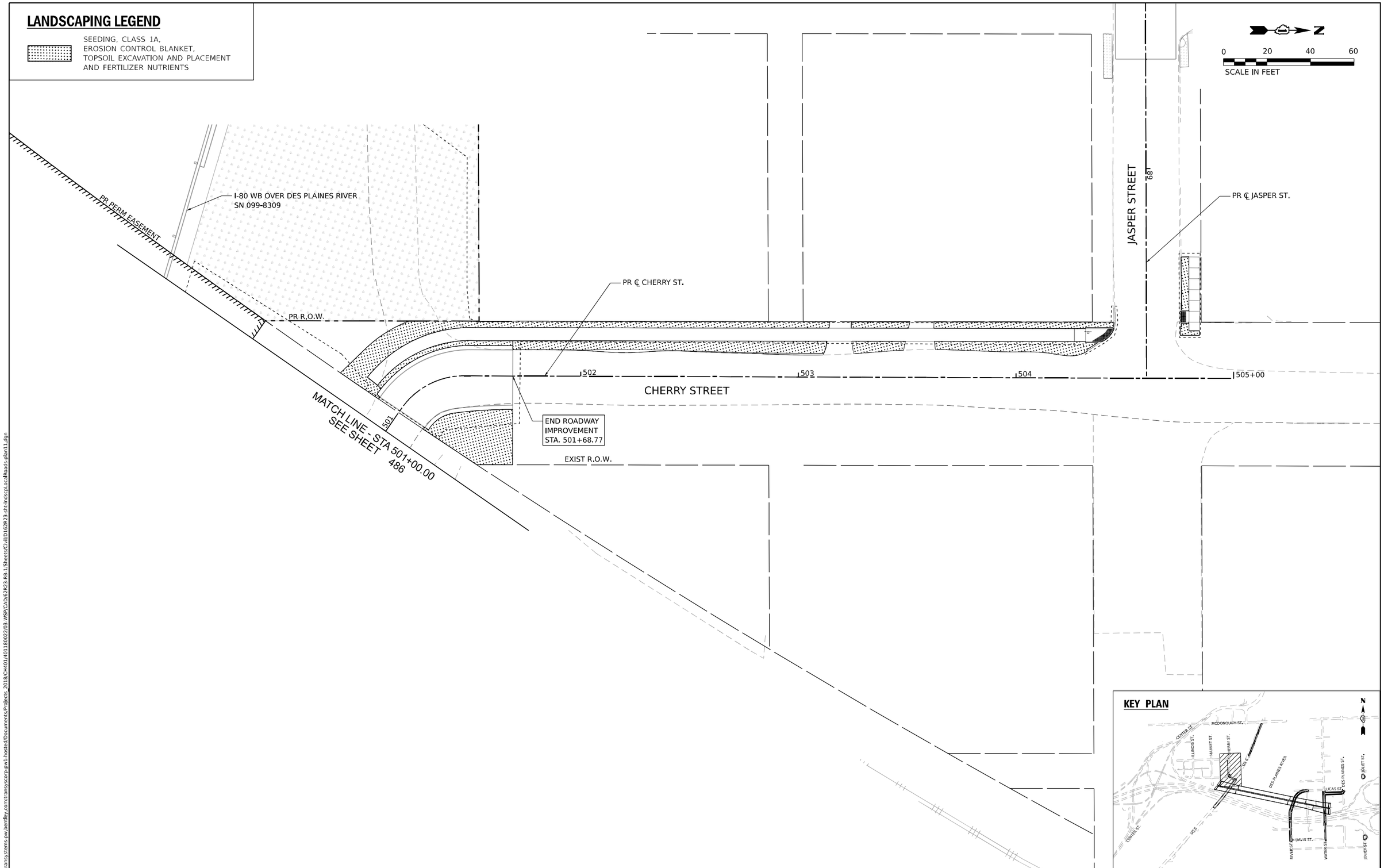

MODEL: Default
FILE NAME: pw://transystems-pw.bentley.com:transyscorp-pw1-hosted/Documents/Projects_2018/CH401/401180022/03-WSP/CAD/62R23-RB-1/Sheets/Civil/D1R23-sht-lnscp-loc-Road-plan11.dgn

Accurate GROUP, INC.

USER NAME = jploquinto	DESIGNED - JLS	REVISED -	
	DRAWN - AK	REVISED -	
PLOT SCALE = 40.000 ' / in.	CHECKED - AB	REVISED -	
PLOT DATE = 11/5/2025	DATE - 11/7/2025	REVISED -	

STATE OF ILLINOIS
DEPARTMENT OF TRANSPORTATION

LANDSCAPING PLAN
CHERRY STREET

SCALE: 1"=20' | SHEET 11 OF 13 SHEETS | STA. 500+00 TO STA. 505+00

F.A.I. RTE.	SECTION	COUNTY	TOTAL SHEETS	SHEET NO.
80	FAI 80 21 STRUCTURE 2	WILL	1230	487
		CONTRACT NO. 62R23		
	ILLINOIS	FED. AID PROJECT		

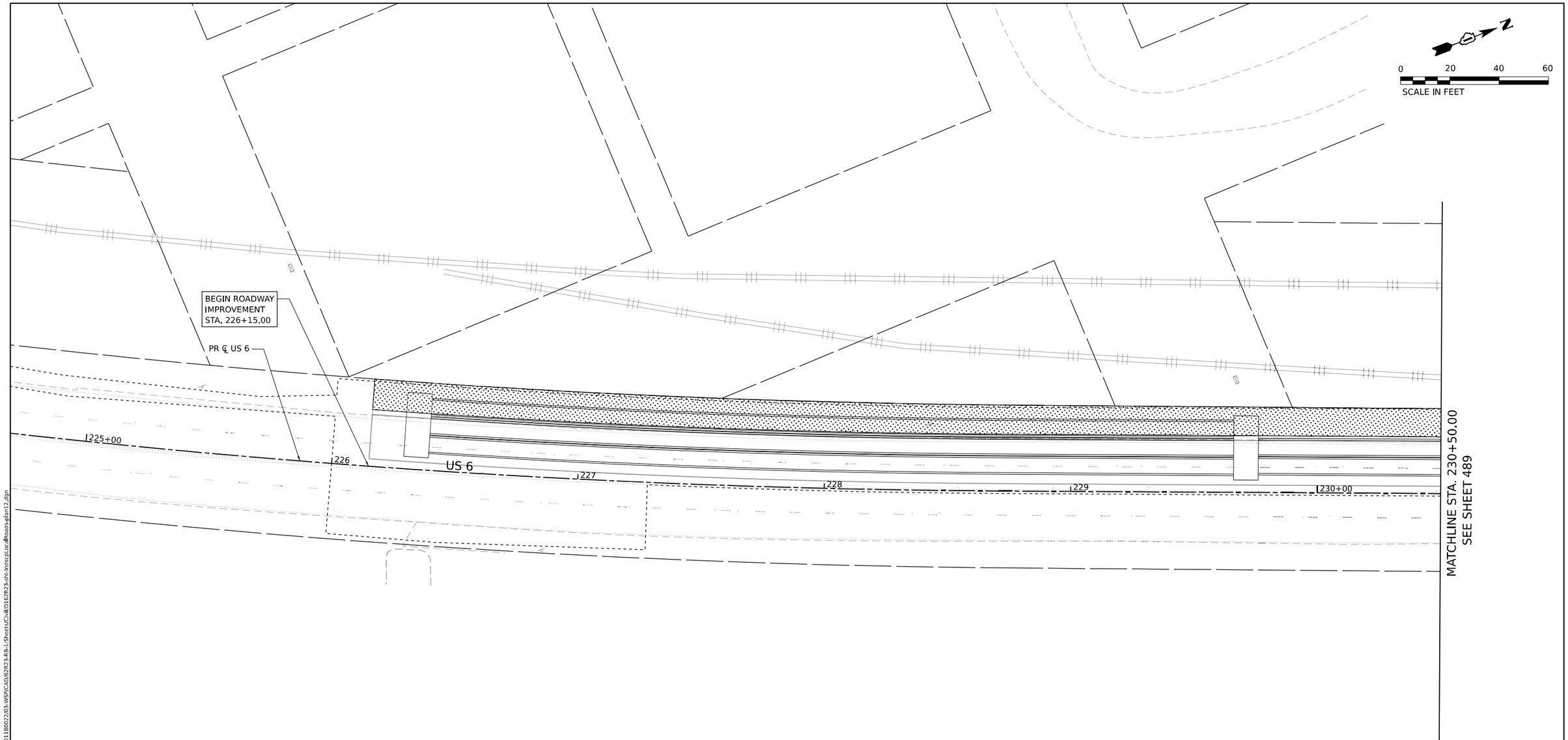

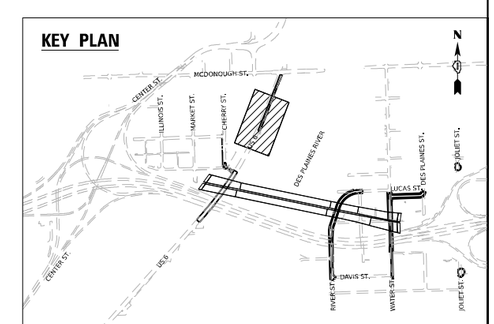

LANDSCAPING LEGEND

SEEDING, CLASS 1A,
EROSION CONTROL BLANKET,
TOPSOIL EXCAVATION AND PLACEMENT
AND FERTILIZER NUTRIENTS

MODEL: Default
FILE NAME: pw://transystems-pw.bentley.com:transyscorp-pw1-hosted/Documents/Projects_2018/CH401/401180022/03-VISP/CAD/62R23-RB-1/Sheets/Civil/0162R23-sht-indscpt/ocd/Roads-plan12.dgn

Accurate GROUP, INC.

USER NAME = jpioquinto	DESIGNED - JLS	REVISED -	
	DRAWN - AK	REVISED -	
PLOT SCALE = 40.000 ' / in.	CHECKED - AB	REVISED -	
PLOT DATE = 11/5/2025	DATE - 11/7/2025	REVISED -	

STATE OF ILLINOIS
DEPARTMENT OF TRANSPORTATION

LANDSCAPING PLAN
US–6

SCALE: 1"=20' | SHEET 12 OF 13 SHEETS | STA. 224+69 TO STA. 230+50

F.A.I. RTE.	SECTION	COUNTY	TOTAL SHEETS	SHEET NO.
80	FAI 80 21 STRUCTURE 2	WILL	1230	488
		CONTRACT NO. 62R23		
	ILLINOIS	FED. AID PROJECT		

LANDSCAPING LEGEND

SEEDING, CLASS 1A,
EROSION CONTROL BLANKET,
TOPSOIL EXCAVATION AND PLACEMENT
AND FERTILIZER NUTRIENTS

0 20 40 60
SCALE IN FEET

SEE SHEET 488
MATCHLINE STA. 230+50.00

PR ℄ US 6

END ROADWAY
IMPROVEMENT
STA. 233+22.35

231 232 233

US 6

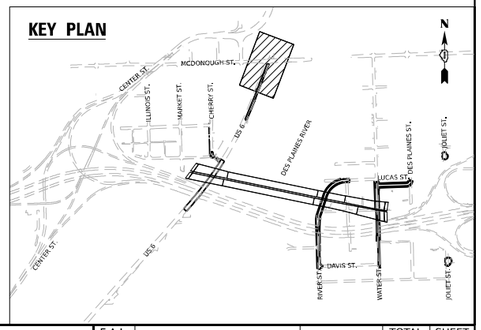

MODEL: Default
FILE NAME: pw://transystems-pw.bentley.com:transyscorp-pw1-hosted/Documents/Projects_2018/CH401/401180022/03-WSP/CAD/62R23-RB-1/Sheets/CvlID162R23-lht-lndscp.dgn

Accurate GROUP, INC.

USER NAME = jpioquinto	DESIGNED - JLS	REVISED -	
	DRAWN - AK	REVISED -	
PLOT SCALE = 40.000 ' / in.	CHECKED - AB	REVISED -	
PLOT DATE = 11/5/2025	DATE - 11/7/2025	REVISED -	

STATE OF ILLINOIS
DEPARTMENT OF TRANSPORTATION

LANDSCAPING PLAN
US-6

SCALE: 1"=20' | SHEET 13 OF 13 SHEETS | STA. 230+50 TO STA. 233+46

F.A.I. RTE.	SECTION	COUNTY	TOTAL SHEETS	SHEET NO.
80	FAI 80 21 STRUCTURE 2	WILL	1230	489
		CONTRACT NO. 62R23		
		ILLINOIS	FED. AID PROJECT	

TRAFFIC SIGNAL LEGEND

(NOT TO SCALE)

ITEM	EXISTING	PROPOSED
CONTROLLER CABINET		
COMMUNICATION CABINET	CC	CC
MASTER CONTROLLER	MC	MC
MASTER MASTER CONTROLLER	MMC	MMC
UNINTERRUPTABLE POWER SUPPLY		
SERVICE INSTALLATION -(P) POLE MOUNTED	P	P
SERVICE INSTALLATION -(G) GROUND MOUNTED -(GM) GROUND MOUNTED METERED	G GM	G GM
TELEPHONE CONNECTION	T	T
STEEL MAST ARM ASSEMBLY AND POLE		
ALUMINUM MAST ARM ASSEMBLY AND POLE		
STEEL COMBINATION MAST ARM ASSEMBLY AND POLE WITH LUMINAIRE		
SIGNAL POST -(BM) BARREL MOUNTED - TEMPORARY		BM
WOOD POLE		
GUY WIRE		
SIGNAL HEAD		
SIGNAL HEAD WITH BACKPLATE		
SIGNAL HEAD OPTICALLY PROGRAMMED	P P	P P
FLASHER INSTALLATION -(FS) SOLAR POWERED	F FS F FS	F FS F FS
PEDESTRIAN SIGNAL HEAD		
PEDESTRIAN PUSH BUTTON -(APS) ACCESSIBLE PEDESTRIAN PUSH BUTTON	APS	APS
RADAR DETECTION SENSOR	R	R
VIDEO DETECTION CAMERA	V	V
RADAR/VIDEO DETECTION ZONE		
PAN, TILT, ZOOM (PTZ) CAMERA	PTZ	PTZ
EMERGENCY VEHICLE LIGHT DETECTOR		
CONFIMATION BEACON		
WIRELESS INTERCONNECT		
WIRELESS INTERCONNECT RADIO REPEATER	RR	RR

ITEM	EXISTING	PROPOSED
HANDHOLE -SQUARE -ROUND		
HEAVY DUTY HANDHOLE -SQUARE -ROUND	H H	H H
DOUBLE HANDHOLE		
JUNCTION BOX		
RAILROAD CANTILEVER MAST ARM		
RAILROAD FLASHING SIGNAL		
RAILROAD CROSSING GATE		
RAILROAD CROSSBUCK		
RAILROAD CONTROLLER CABINET		
UNDERGROUND CONDUIT (UC), GALVANIZED STEEL		
TEMPORARY SPAN WIRE, TETHER WIRE, AND CABLE		
SYSTEM ITEM	S	SP
INTERSECTION ITEM	I	IP
REMOVE ITEM		R
RELOCATE ITEM		RL
ABANDON ITEM		A
CONTROLLER CABINET AND FOUNDATION TO BE REMOVED		RCF
MAST ARM POLE AND FOUNDATION TO BE REMOVED		RMF
SIGNAL POST AND FOUNDATION TO BE REMOVED		RPF
DETECTOR LOOP, TYPE I		
PREFORMED DETECTOR LOOP	P P	P P
SAMPLING (SYSTEM) DETECTOR	S S	S S
INTERSECTION AND SAMPLING (SYSTEM) DETECTOR	IS IS	IS IS
QUEUE AND SAMPLING (SYSTEM) DETECTOR	QS QS	QS QS
WIRELESS DETECTOR SENSOR	W	W
WIRELESS ACCESS POINT		

ITEM	EXISTING	PROPOSED
SIGNAL HEAD -(P) PROGRAMMABLE SIGNAL HEAD	R Y G Y G P	R Y G Y G P
SIGNAL HEAD WITH BACKPLATE -(P) PROGRAMMABLE SIGNAL HEAD -(RB) RETROREFLECTIVE BACKPLATE	R Y G Y G R Y G Y G R Y G Y G P RB	R Y G Y G R Y G Y G R Y G Y G P RB
PEDESTRIAN SIGNAL HEAD AT RAILROAD INTERSECTIONS		
PEDESTRIAN SIGNAL HEAD WITH COUNTDOWN TIMER	C D	C D
ILLUMINATED SIGN "NO LEFT TURN"/"NO RIGHT TURN"		
NUMBER OF CONDUCTORS, ELECTRIC CABLE NO. 14, UNLESS NOTED OTHERWISE. ALL DETECTOR LOOP CABLE TO BE SHIELDED	5	5
GROUND CABLE IN CONDUIT, NO. 6 SOLID COPPER (GREEN)	1#6	1#6
ELECTRIC CABLE IN CONDUIT, TRACER NO. 14 1/C	1	1
COAXIAL CABLE	C	C
VENDOR CABLE	V	V
COPPER INTERCONNECT CABLE, NO. 18, 3 PAIR TWISTED, SHIELDED	6#18	6#18
FIBER OPTIC CABLE -NO. 62.5/125, MM12F -NO. 62.5/125, MM12F SM12F -NO. 62.5/125, MM12F SM24F	12F 24F 36F	12F 24F 36F
GROUND ROD -(C) CONTROLLER -(M) MAST ARM -(P) POST -(S) SERVICE	C M P S	C M P S

TS SHT NO. 1

MODE.: Default
FILE NAME: pw:\\IL084EBIDINTEG.illinois.gov:PWIDOT\Documents\IDOT Offices\District 1\Projects\StdSd22x34\CADdata\CADsheets\ts05.dgn

USER NAME = footemj	DESIGNED - IP	REVISED -	
	DRAWN - IP	REVISED -	
PLOT SCALE = 50.0000 ' / in.	CHECKED - LP	REVISED -	
PLOT DATE = 3/4/2019	DATE - 9/29/2016	REVISED -	

STATE OF ILLINOIS
DEPARTMENT OF TRANSPORTATION

DISTRICT ONE
STANDARD TRAFFIC SIGNAL DESIGN DETAILS

SCALE: NONE | SHEET 1 OF 7 SHEETS | STA. TO STA.

F.A.I. RTE.	SECTION	COUNTY	TOTAL SHEETS	SHEET NO.
80	FAI 80 21 STRUCTURE 2	WILL	1230	490

CONTRACT NO. 62R23

ILLINOIS | FED. AID PROJECT

LOOP DETECTOR NOTES

1. EACH PAIR OF LOOP WIRES SHALL BE PLACED IN A SEPARATE EMPTY COILABLE NONMETALLIC CONDUIT FROM THE EDGE OF PAVEMENT TO THE HANDHOLE. SPACING BETWEEN THE HOLES DRILLED IN THE PAVEMENT SHALL NOT BE LESS THAN 6" (150 mm). EMPTY COILABLE NONMETALLIC CONDUIT SHALL BE INCLUDED IN THE COST OF THE LOOP WIRE.

2. THE NUMBER OF LOOP TURNS SHALL BE AS RECOMMENDED BY THE AMPLIFIER MANUFACTURER. ALL ADJACENT SIDES OF THE LOOPS SHALL BE INSTALLED IN SUCH A WAY THAT THE CURRENT FLOW IS IN THE SAME DIRECTION TO REINFORCE ITS MAGNETIC FIELDS FOR SMALL VEHICLE DETECTION.

3. EACH LOOP LEAD-IN SHALL BE IDENTIFIED AND PERMANENTLY TAGGED IN THE HANDHOLE. EACH LEAD-IN CABLE TAG SHALL INDICATE THE LOCATION OF THE LOOP, LOOP ROTATION (CLOCKWISE/COUNTERCLOCKWISE), LOOP LEAD-IN DIRECTION (IN OR OUT), LOOP CABLE NUMBER AND LOCATION IN CABINET, AND NUMBER OF TURNS IN THE DETECTOR LOOPS IN WATER PROOF INK AS INDICATED ON THE DISTRICT 1 STANDARD TRAFFIC SIGNAL DESIGN DETAIL. THE CONTRACTOR SHALL MARK LOOP LOCATIONS ON RECORD DRAWINGS AND PRESENT TO THE ENGINEER AFTER FINAL INSPECTION. LOOPS SHALL BE MARKED BY LANE AND LOOP NUMBER. SEE DETAIL BELOW.

4. ALL LOOP CABLE SHALL BE FASTENED WITH PLASTIC TIE WRAP TO THE HANDHOLE HOOKS.

5. IN ASPHALT PAVEMENT, LOOPS SHOULD BE PLACED IN THE BINDER AND DIVEHOLES MARKED AT THE CURB WITH A SAW-CUT. THE SAW-CUT SHALL BE CUT IN ACCORDANCE WITH LOCAL AND E.P.A. DUST CONTROL REQUIREMENTS. DETECTOR LOOP(S) SHALL NOT BE INSTALLED IN WET CONDITIONS AND THE SAW-CUTS MUST BE FREE OF DEBRIS AND RESIDUE SUCH AS DUST AND WATER WHICH IS TO BE ACHIEVED BY THE USE OF COMPRESSED AIR, WIRE BRUSHING AND HEAT DRYING ACCORDING TO SEALANT MANUFACTURER REQUIREMENTS. THE DETECTOR WIRE SHALL BE HELD IN PLACE BY THE USE OF FORM WEDGES. WEDGES SHALL BE SPACED NO MORE THAN 18" (450 mm) APART.

6. LOOP SPLICES SHALL BE SOLDERED USING A SOLDERING IRON. BLOW TORCHES OR OTHER DEVICES WHICH OXIDIZE COPPER CABLE SHALL NOT BE ALLOWED FOR SOLDERING OPERATIONS. SEE DETAIL BELOW RIGHT.

7. PREFORMED DETECTOR LOOPS SHALL BE USED, AS SHOWN ON THE PLANS, WHERE NEW CONCRETE PAVEMENT IS PROPOSED. THE INSTALLATION OF PREFORMED LOOPS SHALL BE IN ACCORDANCE WITH THE DISTRICT 1 SPECIFICATIONS OR AS DIRECTED BY THE ENGINEER.

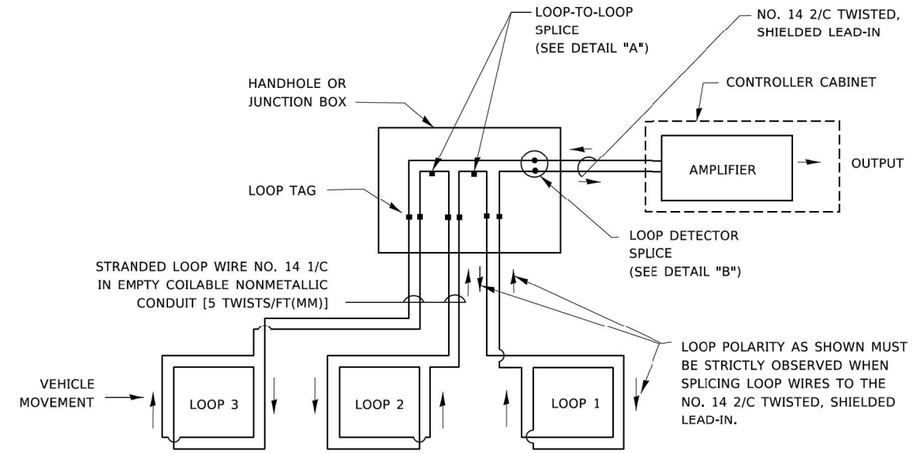

DETECTOR LOOP WIRING SCHEMATIC

- LOOPS SHALL BE SPLICED IN SERIES. SAW-CUTS SHALL BE A MINIMUM WIDTH OF 5/16" (8 mm).
- SAW-CUT DEPTHS SHALL BE 3" (75 mm). IF IN CONCRETE.
- THE SAW-CUT DEPTH SHALL BE TO THE TOP OF THE REINFORCEMENT.
- LOOP CORNERS SHALL BE DRILLED WITH A 2" (50 mm) DIAMETER CORE.

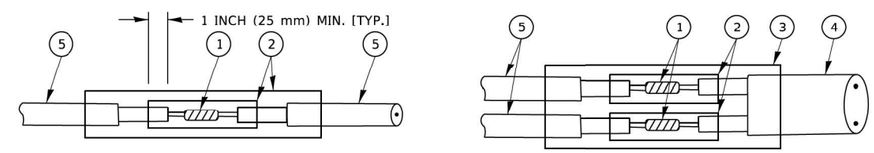

DETAIL "A"
LOOP-TO-LOOP SPLICE

DETAIL "B"
LOOP-TO-CONTROLLER SPLICE

TYPE I LOOP

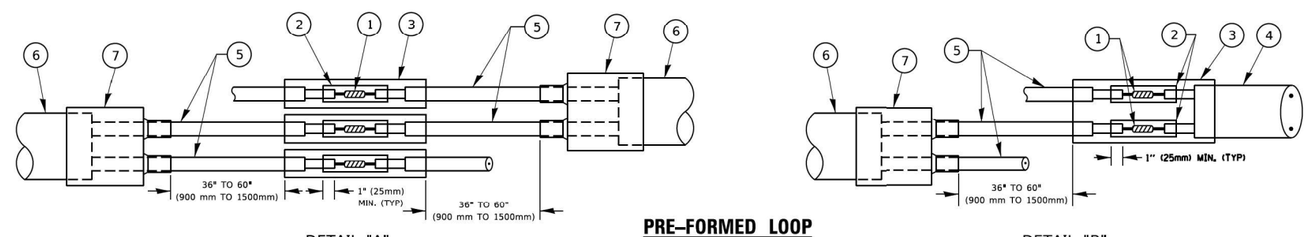

DETAIL "A"
LOOP-TO-LOOP SPLICE

PRE-FORMED LOOP

DETAIL "B"
LOOP-TO-CONTROLLER SPLICE

LOOP LEAD-IN CABLE TAG

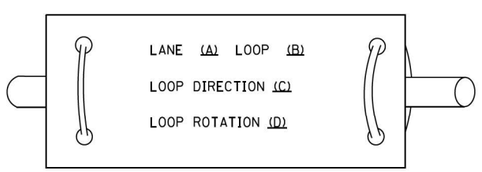

A. LANE 1 IS THE LANE CLOSEST TO THE CENTERLINE OF THE ROADWAY
B. LOOP #1 IS THE LOOP IN THE LANE CLOSEST TO THE INTERSECTION.
C. LABEL LOOP CABLE "IN" OR LOOP CABLE "OUT".
D. LABEL LOOP CABLE CLOCKWISE OR LOOP CABLE COUNTERCLOCKWISE.

LOOP DETECTOR SPLICE

1. WESTERN UNION SPLICE SOLDERED WITH ROSIN CORE FLUX. ALL EXPOSED SURFACES OF THE SOLDER SHALL BE SMOOTH. THE WESTERN UNION SPLICES SHALL BE STAGGERED.
2. WCSMW 30/100 HEAT SHRINK TUBE, MINIMUM LENGTH 3" (75 mm), UNDERWATER GRADE.
3. WCS 200/750 HEAT SHRINK TUBE, MINIMUM LENGHT 6" (150 mm), UNDERWATER GRADE.
4. NO. 14 2/C TWISTED, SHIELDED CABLE.
5. LOOP CONDUCTOR WITH FLEXIBLE PLASTIC TUBE. PRE-FORMED LOOP
6. XL POLYOLEFIN 2 CONDUCTOR
7. BREAKOUT SEALS. TYCO CBR-2 OR APPROVED EQUAL

TS SHT NO. 2

MODE.: Default
FILE NAME: pw:\\IL084EBIDINTEG.illinois.gov:PWIDOT\Documents\IDOT Offices\District 1\Projects\DistStd22x34\CADData\CADsheets\ts05.dgn

USER NAME = footemj	DESIGNED -	REVISED -	
	DRAWN -	REVISED -	
PLOT SCALE = 50.0000 ' / in.	CHECKED -	REVISED -	
PLOT DATE = 3/4/2019	DATE -	REVISED -	

STATE OF ILLINOIS
DEPARTMENT OF TRANSPORTATION

DISTRICT ONE
STANDARD TRAFFIC SIGNAL DESIGN DETAILS

SCALE: NONE | SHEET 2 OF 7 SHEETS | STA. TO STA.

F.A.I. RTE.	SECTION	COUNTY	TOTAL SHEETS	SHEET NO.
80	FAI 80 21 STRUCTURE 2	WILL	1230	491
		CONTRACT NO. 62R23		
		ILLINOIS FED. AID PROJECT		

TRAFFIC SIGNAL MAST ARM AND SIGNAL POST

MAST ARM MOUNTED SIGNALS IN EXISTING, PROPOSED OR FUTURE SIDEWALK/BICYCLE PATH AREA. INTERSECTION SHOWN WITH PEDESTRIAN SIGNALS AND PEDESTRIAN PUSHBUTTON DETECTORS.

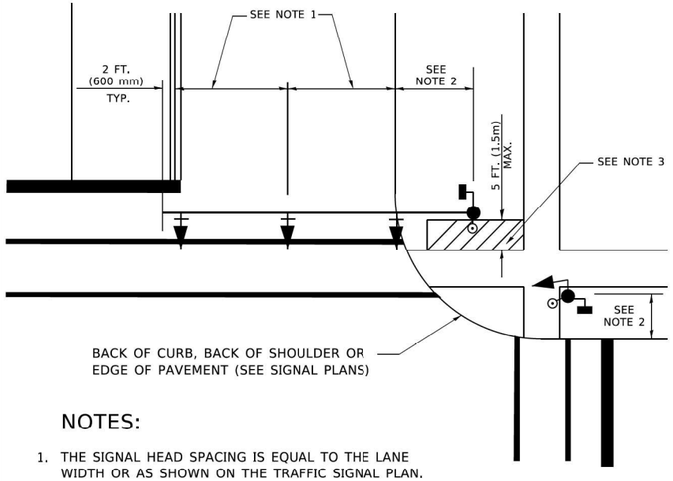

NOTES:

1. THE SIGNAL HEAD SPACING IS EQUAL TO THE LANE WIDTH OR AS SHOWN ON THE TRAFFIC SIGNAL PLAN.
2. REFER TO THE TRAFFIC SIGNAL EQUIPMENT OFFSET TABLE.
3. PROVIDE A LEVEL ALL-WEATHER SURFACE (CONCRETE SIDEWALK, ASPHALT BICYCLE PATH SURFACE OR MATCHING MATERIAL TO THE ADJACENT SURFACE) UP TO THE MAST ARM SHAFT OR THE SIGNAL POST.
4. THE FACE OF THE PEDESTRIAN PUSHBUTTON SHALL BE PARALLEL TO THE CROSSWALK TO BE USED.
5. THE LOCATIONS AND INSTALLATION OF PEDESTRIAN SIGNAL HEADS AND PEDESTRIAN PUSHBUTTONS SHALL MEET THE REQUIREMENTS OF THE MUTCD AND INFORMATION FOUND IN THE "AMERICANS WITH DISABILITIES ACT ACCESSIBILITY GUIDELINES FOR BUILDINGS AND FACILITIES."

PEDESTRIAN SIGNAL POST AND PEDESTRIAN PUSH BUTTON POST

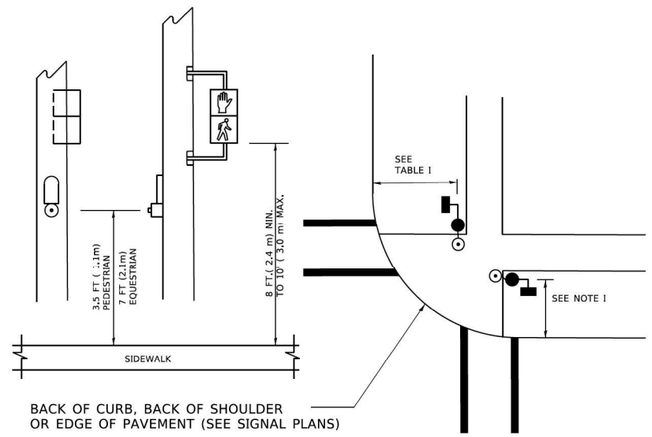

NOTES:

1. REFER TO THE TRAFFIC SIGNAL EQUIPMENT OFFSET TABLE.
2. PROVIDE A LEVEL ALL-WEATHER SURFACE (CONCRETE SIDEWALK, ASPHALT BICYCLE PATH SURFACE OR MATCHING MATERIAL TO THE ADJACENT SURFACE) UP TO THE PEDESTRIAN SIGNAL POST OR THE PEDESTRIAN PUSH BUTTON POST.
3. THE FACE OF THE PEDESTRIAN PUSHBUTTON SHALL BE PARALLEL TO THE CROSSWALK TO BE USED.
4. THE LOCATIONS AND INSTALLATION OF PEDESTRIAN SIGNAL HEADS AND PEDESTRIAN PUSHBUTTONS SHALL MEET THE REQUIREMENTS OF THE MUTCD AND INFORMATION FOUND IN THE "AMERICANS WITH DISABILITIES ACT ACCESSIBILITY GUIDELINES FOR BUILDINGS AND FACILITIES."

RECOMMENDED PUSHBUTTON LOCATIONS

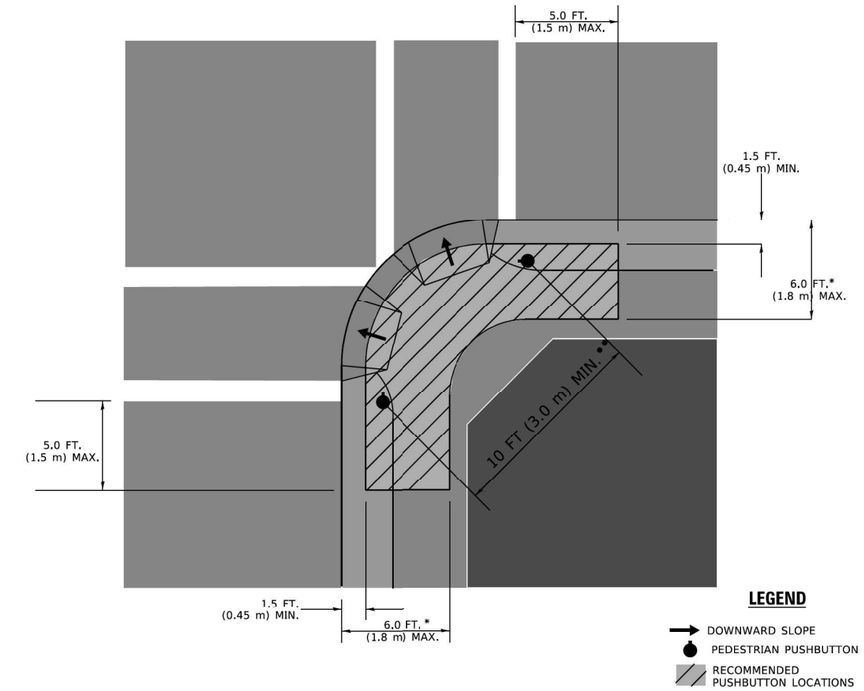

* WHERE THERE ARE CONSTRAINTS THAT MAKE IT IMPRACTICAL TO PLACE THE PEDESTRIAN PUSHBUTTON BETWEEN 1.5 FT (0.45 m) AND 6 FT (1.8 m) FROM THE EDGE OF THE CURB, SHOULDER, OR PAVEMENT, IT SHOULD NOT BE FURTHER THAN 10 FT (3 m) FROM THE EDGE OF CURB, SHOULDER, OR PAVEMENT.

** WHERE THERE ARE CONSTRAINTS ON A PARTICULAR CORNER THAT MAKE IT IMPRACTICAL TO PROVIDE THE 10 FT (3 m) SEPERATION BETWEEN THE TWO PEDESTRIAN PUSHBUTTONS, THE PUSHBUTTONS MAY BE PLACED CLOSER TOGETHER OR ON THE SAME POLE.

NOTES:

1. PEDESTRIAN SIGNAL HEADS SHALL BE MOUNTED WITH THE BOTTOM OF THE SIGNAL HOUSING INCLUDING BRACKETS NOT LESS THAN 8 FT (2.4 m) OR MORE THAN 10 FT (3 m) ABOVE SIDEWALK LEVEL, AND SHALL BE POSITIONED AND ADJUSTED TO PROVIDE MAXIMUM VISIBILITY AT THE BEGINNING OF THE CONTROLLED CROSSWALK.
2. THE BOTTOM OF THE SIGNAL HOUSING (INCLUDING BRACKETS) OF A VEHICULAR SIGNAL FACE THAT IS NOT LOCATED OVER A HIGHWAY SHALL BE AT LEAST 8 FT (2.4 m) BUT NOT MORE THAN 19 FT (5.8 m) ABOVE THE SIDEWALK OR, IF THERE IS NO SIDEWALK, ABOVE THE PAVEMENT GRADE AT THE CENTER OF THE ROADWAY.
3. THE BOTTOM OF THE SIGNAL HOUSING AND ANY RELATED ATTACHMENTS TO A SIGNAL FACE LOCATED OVER ANY PORTION OF A HIGHWAY SHALL BE ACCORDING TO CURRENT STATE STANDARDS 877001, 877002, 877006, 877011 AND 877012 WITH A MINIMUM OF 16 FT (5.0 m) AND A MAXIMUM OF 18 FT. (5.5 m) FROM THE HIGHEST POINT OF PAVEMENT.
4. THE BOTTOM OF THE TEMPORARY SPAN WIRE MOUNTED SIGNAL HOUSING AND ANY RELATED ATTACHMENTS TO A SIGNAL FACE LOCATED OVER ANY PORTION OF A HIGHWAY SHALL BE ACCORDING TO CURRENT STATE STANDARD 880001 WITH A MINIMUM OF 17 FT (5.18 m) FROM THE HIGHEST POINT OF PAVEMENT.
5. THE TOP OF THE SIGNAL HOUSING OF A SIGNAL FACE LOCATED OVER ANY PORTION OF A HIGHWAY SHALL NOT BE MORE THAN 25.6 FT (7.8 m) ABOVE THE PAVEMENT.

TRAFFIC SIGNAL EQUIPMENT OFFSET

TRAFFIC SIGNAL EQUIPMENT	COMBINATION CONCRETE CURB AND GUTTER (MINIMUM DISTANCE FROM BACK OF CURB TO CENTERLINE OF FOUNDATION)	SHOULDER/NON-CURBED AREA (MINIMUM DISTANCE FROM EDGE OF PAVEMENT TO CENTERLINE OF FOUNDATION)
TRAFFIC SIGNAL MAST ARM POLE	6 FT (1.8m)	SHOULDER WIDTH + 2 FT (0.5m), MINIMUM 10 FT (3.0m)
TRAFFIC SIGNAL POST	4 FT (1.2m)	SHOULDER WIDTH + 2 FT (0.5m), MINIMUM 10 FT (3.0m)
PEDESTRIAN SIGNAL POST	4 FT (1.2m)	SHOULDER WIDTH + 2 FT (0.5m), MINIMUM 10 FT (3.0m)
PEDESTRIAN PUSHBUTTON POST	4 FT (1.2m)	SHOULDER WIDTH + 2 FT (0.5m), MINIMUM 10 FT (3.0m)
TEMPORARY WOOD POLE	6 FT (1.8m)	SHOULDER WIDTH + 2 FT (0.5m), MINIMUM 10 FT (3.0m)
CONTROLLER CABINET	6 FT (1.8m) MINIMUM DISTANCE SEE NOTE 2	SHOULDER WIDTH + 6 FT (1.8m), MINIMUM 16 FT (4.9m) SEE NOTE 3.
SERVICE INSTALLATION, GROUND MOUNT	6 FT (1.8m) MINIMUM DISTANCE SEE NOTE 2	SHOULDER WIDTH + 6 FT (1.8m), MINIMUM 16 FT (4.9m) SEE NOTE 3.

NOTES:

1. CONTACT THE "AREA TRAFFIC SIGNAL MAINTENANCE AND OPERATIONS ENGINEER" FOR ASSISTANCE IN LOCATING THE TRAFFIC SIGNAL EQUIPMENT WHEN THERE ARE CONFLICTS WITH DITCHES OR THE MINIMUM OFFSET DISTANCES CANNOT BE MET.
2. MINIMUM DISTANCE FROM THE BACK OF CURB TO THE ROADWAY SIDE OF THE FOUNDATION.
3. MINIMUM DISTANCE FROM THE EDGE OF PAVEMENT TOTHE ROADWAY SIDE OF THE FOUNDATION.
4. ANY CHANGES TO THE OFFSETS OF THE FOUNDATIONS, FROM THE MINIMUM DISTANCES LISTED IN THE "TRAFFIC SIGNAL EQUIPMENT OFFSET" CHART AND THE TRAFFIC SIGNAL INSTALLATION PLAN, COULD EFFECT THE PLACEMENT OF THE SIGNAL HEADS, PEDESTRIAN SIGNAL HEADS AND THE PEDESTRIAN PUSHBUTTONS. THE SIGNAL HEAD PLACEMENT ON THE MAST ARMS SHALL REMAIN AS PER THE TRAFFIC SIGNAL INSTALLATION PLAN AND THE "TRAFFIC SIGNAL MAST ARM AND SIGNAL POST" DETAIL ABOVE. THE PROPOSED MAST ARM LENGTHS MAY NEED TO BE REVISED TO MEET THE ABOVE REQUIREMENTS. THE PEDESTRIAN SIGNAL HEADS AND PEDESTRIAN PUSHBUTTONS MUST MEET THE REQUIREMENTS UNDER THE DETAILS ON THIS SHEET.

TS SHT NO. 3

MODE: Default
FILE NAME: pw:\\IL084EBIDINTEG.illinois.gov:PWIDOT\Documents\IDOT Offices\District 1\Projects\DistStd22x34\CADData\CADsheets\ts06.dgn

USER NAME = footemj	DESIGNED -	REVISED -	
	DRAWN -	REVISED -	
PLOT SCALE = 50.0000 ' / in.	CHECKED -	REVISED -	
PLOT DATE = 3/4/2019	DATE -	REVISED -	

STATE OF ILLINOIS
DEPARTMENT OF TRANSPORTATION

DISTRICT ONE
STANDARD TRAFFIC SIGNAL DESIGN DETAILS

SCALE: NONE | SHEET 3 OF 7 SHEETS | STA. TO STA.

F.A.I. RTE.	SECTION	COUNTY	TOTAL SHEETS	SHEET NO.
80	FAI 80 21 STRUCTURE 2	WILL	1230	492
		CONTRACT NO. 62R23		
		ILLINOIS	FED. AID PROJECT	

ts06.dgn 3/4/2019 11:22:44 AM User:footemj

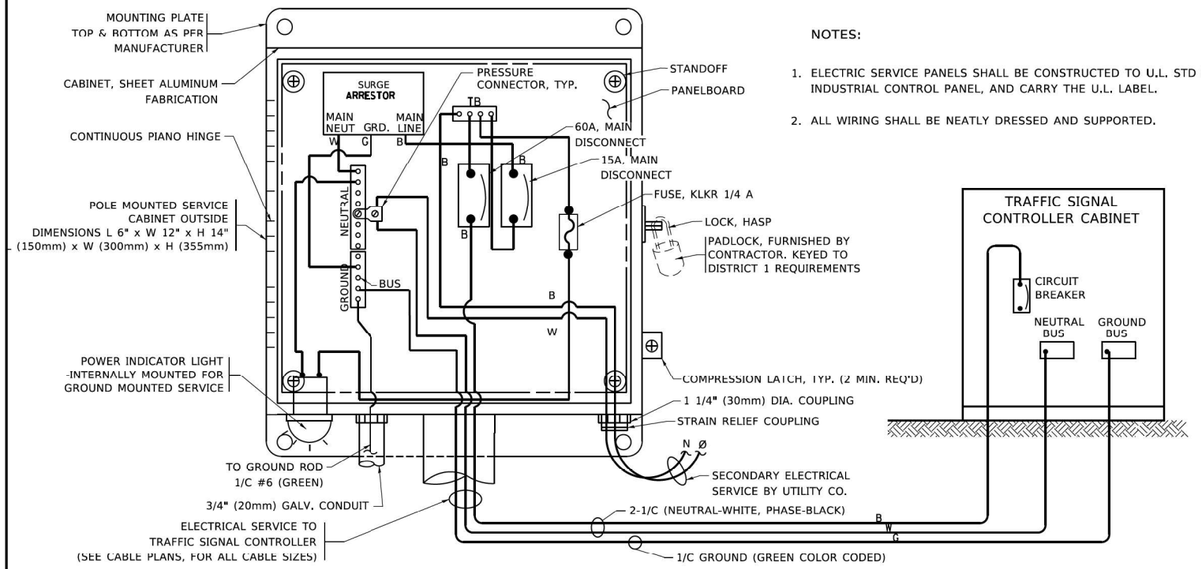

NOTES:

1. ELECTRIC SERVICE PANELS SHALL BE CONSTRUCTED TO U.L. STD 508, INDUSTRIAL CONTROL PANEL, AND CARRY THE U.L. LABEL.
2. ALL WIRING SHALL BE NEATLY DRESSED AND SUPPORTED.

ELECTRICAL SERVICE – PANEL DIAGRAM (TYPICAL FOR POLE AND GROUND MOUNTED SERVICE)

SERVICE INSTALLATION POLE MOUNT (SHOWN)

(NOT TO SCALE)

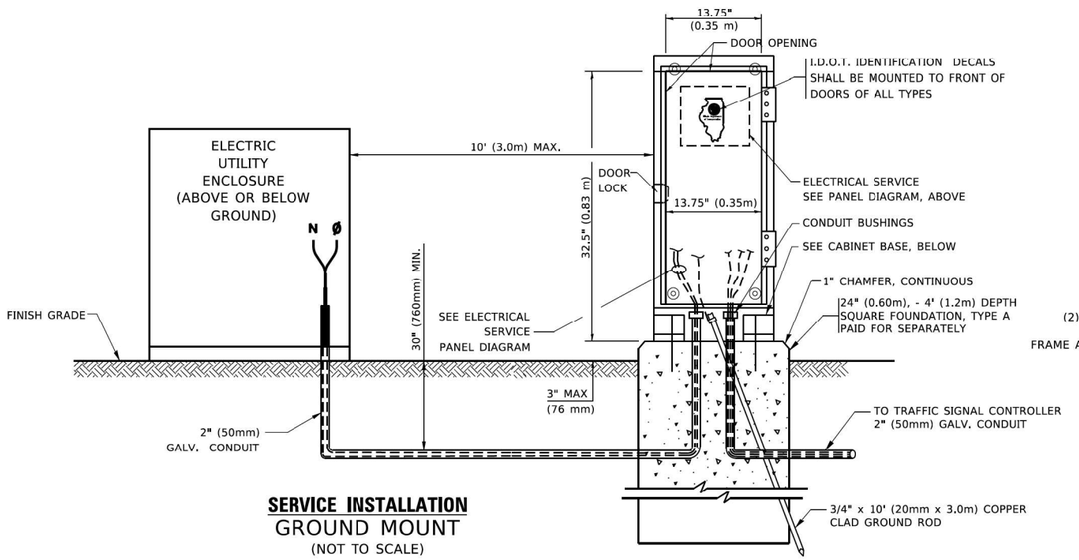

SERVICE INSTALLATION

GROUND MOUNT

(NOT TO SCALE)

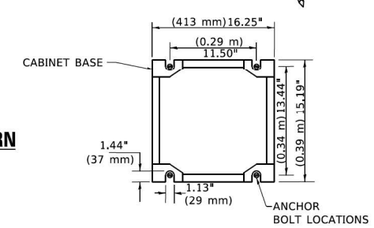

CABINET – BASE BOLT PATTERN

(NOT TO SCALE)

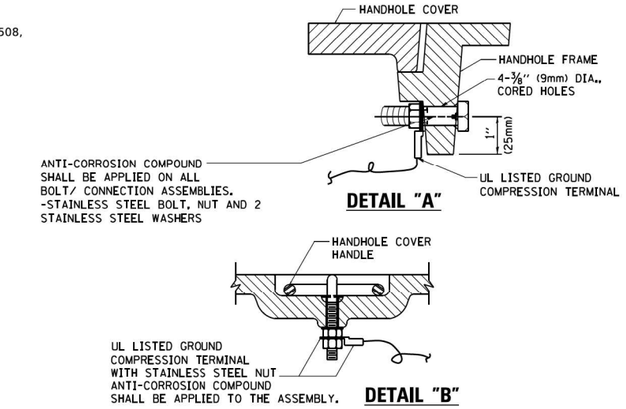

NOTES:

GROUNDING SYSTEM

1. THE GROUNDING SYSTEM SHALL CONSIST OF AN INSULATED CONDUCTOR TYPE XLP, NO. 6 A.W.G., STRANDED COPPER TO BE INSTALLED IN RACEWAYS. THE GROUNDING CABLE SHALL BE INSTALLED IN A CONTINUOUS MANNER AS SHOWN ON THE CABLE PLAN PROVIDED. ALL GROUNDING CONDUCTORS SHALL BE BONDED TO METAL ENCLOSURE (HANDHOLE, POST, MAST ARM, CONTROLLER, ETC,). GROUND ROD SHALL BE 3/4" DIA. x 10'-0" (20mm x 3.0m) LONG, COPPER CLAD. ONE GROUND ROD SHALL BE INSTALLED AT ALL POST FOUNDATIONS, POLE FOUNDATIONS, CONTROLLER CABINET FOUNDATION AND ELECTRICAL SERVICE INSTALLATION AS INDICATED ON THE CABLE PLAN. IF THERE ARE ANY SPECIAL CONDITIONS SUCH AS SUB-SURFACE CONDITIONS OR INSTALLATION PROBLEMS, THE RESIDENT ENGINEER SHALL BE NOTIFIED OR CONTACT THE BUREAU OF TRAFFIC, ILLINOIS DEPARTMENT OF TRANSPORTATION DISTRICT ONE AT (847) 705-4139.
2. THE NEUTRAL CONDUCTOR AND THE GROUND CONDUCTOR SHALL BE CONNECTED IN THE SERVICE INSTALLATION. AT NO OTHER POINT IN THE TRAFFIC SIGNAL SYSTEM SHALL THE NEUTRAL AND GROUND CONDUCTORS BE CONNECTED.
3. ALL EQUIPMENT GROUNDING CONDUCTORS SHALL TERMINATE AT THE GROUND BUS IN THE CONTROLLER CABINET.
4. THE CONTRACTOR SHALL PROVIDE A GROUND CABLE WITH CONNECTORS BETWEEN THE HANDHOLE COVER AND HANDHOLE FRAME.

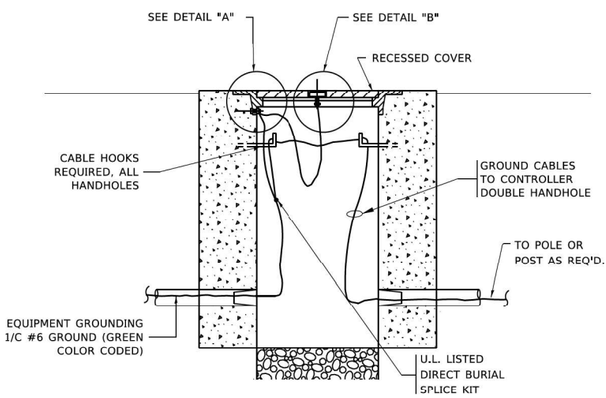

HANDHOLE COVER & FRAME – GROUNDING DETAIL

(NOT TO SCALE)

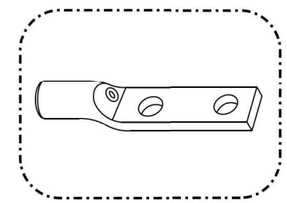

HEAVY-DUTY COMPRESSION TERMINAL (BURNDY TYPE YGHA OR APPROVED EQUAL)

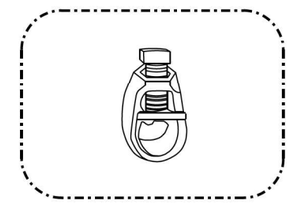

3/4" (20mm) HEAVY-DUTY GROUND ROD CLAMP (BURNDY TYPE GRC OR APPROVED EQUAL)

NOTES:

- ALL CLAMPS SHALL BE BRONZE OR COPPER, UL APPROVED.
- GROUND CABLE SHALL BE LOOPED OVER HOOKS IN THE HANDHOLES
  6.5' (2.0m) SLACK SHALL BE PROVIDED IN SINGLE HANDHOLES
  13' (4.0m) OF SLACK SHALL BE PROVIDED IN DOUBLE HANDHOLES.
  5' (1.4m) OF SLACK SHALL BE PROVIDED BETWEEN FRAME AND COVER.

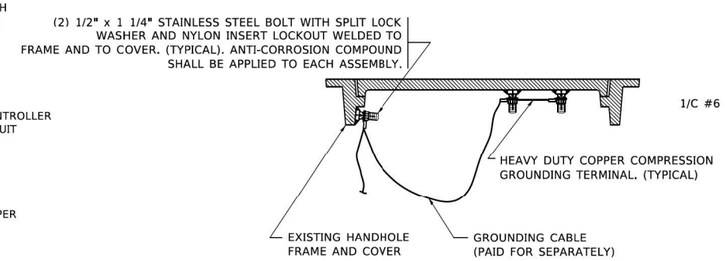

EXISTING HANDHOLE COVER & FRAME – GROUNDING DETAIL

(NOT TO SCALE)

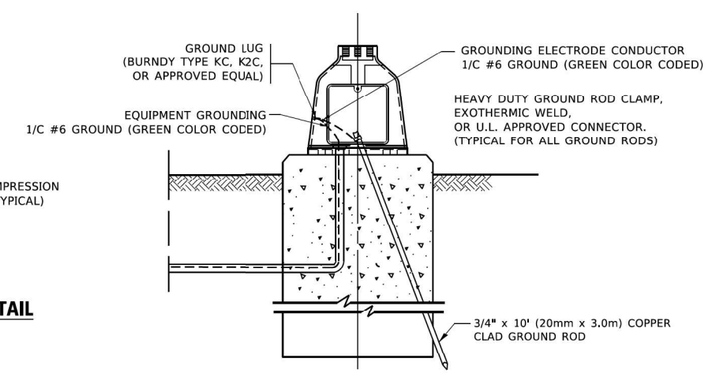

MAST ARM POLE /POST–GROUNDING DETAIL

(NOT TO SCALE)

TS SHT NO. 4

MODE.: Default
FILE NAME: pw:\\IL084EBIDINTEG.illinois.gov:PWIDOT\Documents\IDOT Offices\District 1\Projects\DistStd22x34\CADData\CADsheets\ts02.dgn

USER NAME = footemj	DESIGNED -	REVISED -	
	DRAWN -	REVISED -	
PLOT SCALE = 50.0000 ' / in.	CHECKED -	REVISED -	
PLOT DATE = 3/4/2019	DATE -	REVISED -	

STATE OF ILLINOIS
DEPARTMENT OF TRANSPORTATION

DISTRICT ONE
STANDARD TRAFFIC SIGNAL DESIGN DETAILS

SCALE: NONE | SHEET 4 OF 7 SHEETS | STA. TO STA.

F.A.I. RTE.	SECTION	COUNTY	TOTAL SHEETS	SHEET NO.
80	FAI 80 21 STRUCTURE 2	WILL	1230	493
		CONTRACT NO. 62R23		
	ILLINOIS	FED. AID PROJECT		

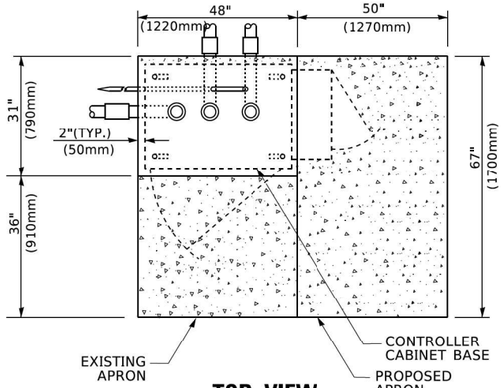

TOP VIEW

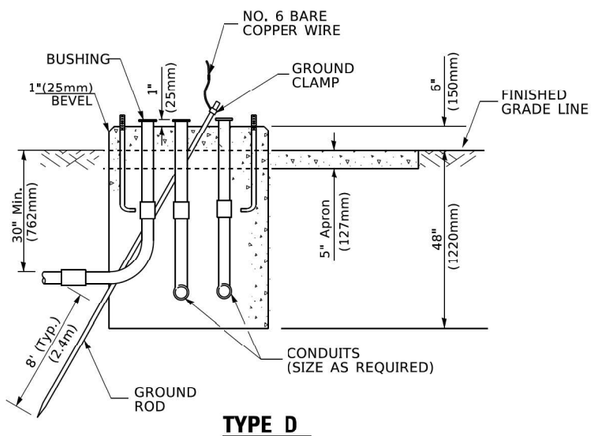

TYPE D
FOR GROUND MOUNTED
CONTROLLER CABINET
AND UPS BATTERY CABINET

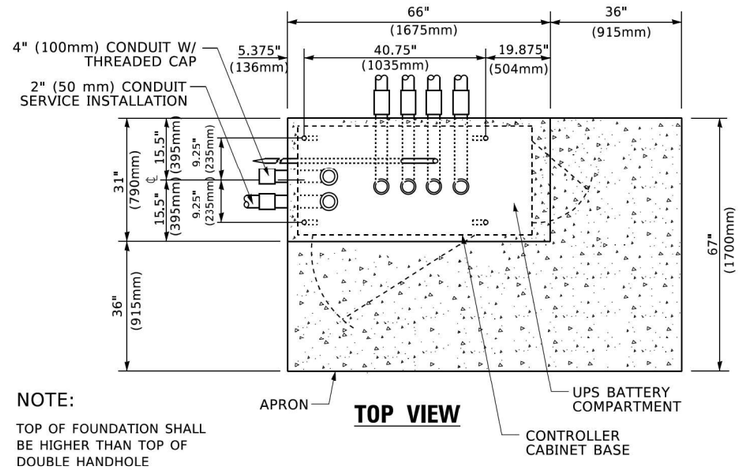

NOTE:

TOP OF FOUNDATION SHALL BE HIGHER THAN TOP OF DOUBLE HANDHOLE

TOP VIEW

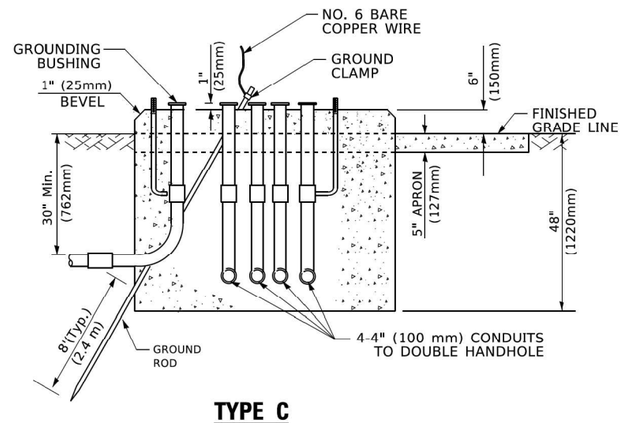

TYPE C
FOR GROUND MOUNTED
SUPER P (TYPE IV) AND SUPER R (TYPE V)
CONTROLLER CABINETS

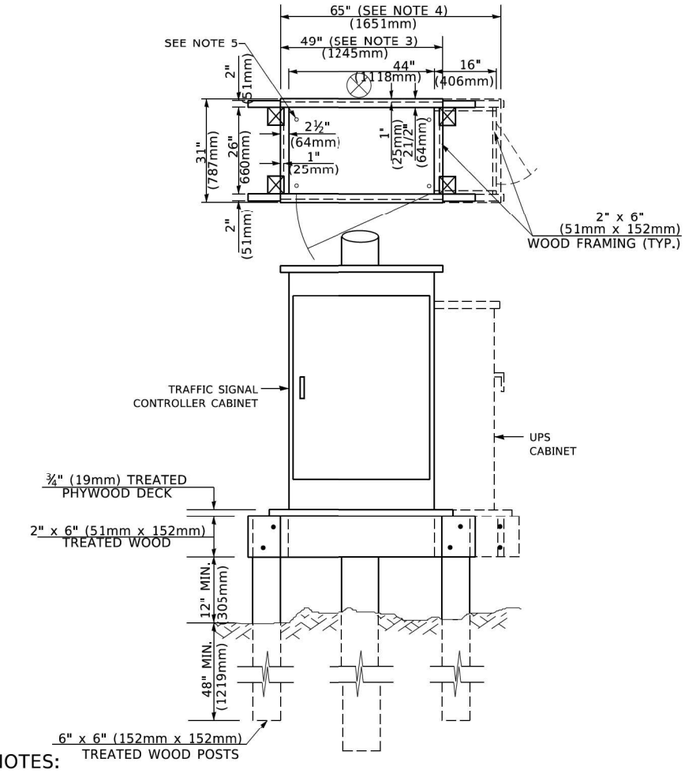

NOTES:

1. BASED ON CONTROLLER CABINET TYPE IV WITH BASE DIMENSIONS OF 26" x 44" (660mm x 1118mm). ADJUST PLATFORM SIZE TO FIT CABINET BASE DIMENSIONS BEING SUPPLIED
2. BASED ON UNINTERRUPTIBLE POWER SUPPLY CABINET WITH BASE DIMENSIONS OF 16" x 25" (406mm x 635mm). ADJUST PLATFORM SIZE TO FIT CABINET BASE DIMENSIONS BEING SUPPLIED.
3. PLATFORM SIZE FOR CONTROLLER CABINET TYPE IV.
4. PLATFORM SIZE FOR CONTROLLER CABINET TYPE IV AND UNINTERRUPTIBLE POWER SUPPLY CABINET.
5. DRILLED HOLES THROUGH THE PLATFORM BASE TO MATCH THE CONTROLLER CABINET BOLT TEMPLATE. FASTEN THE CONTROLLER CABINET TO THE PLATFORM WITH CARRIAGE BOLTS, WASHERS AND NUTS.
6. FASTEN ALL SUPPORT WOOD FRAMING TO THE WOOD POSTS WITH 2 LAG SCREWS FOR EACH CONNECTION..

TEMPORARY SIGNAL CONTROLLER
WOOD SUPPORT PLATFORM

CABLE SLACK LENGTH	FEET	METER
HANDHOLE	6.5	2.0
DOUBLE HANDHOLE	13.0	4.0
SIGNAL POST	2.0	0.6
MAST ARM	2.0	0.6
CONTROLLER CABINET	1.5	0.5
FIBER OPTIC AT CABINET	13.0	4.0
ELECTRIC SERVICE AT (CABINET OR SERVICE LOCATION)	1.5	0.5
GROUND CABLE (SIGNAL POST, MAST ARM, CABINET)	1.5	0.5
GROUND CABLE (BETWEEN FRAME AND COVER)	5.0	1.6

CABLE SLACK

VERTICAL CABLE LENGTH	FEET	METER
MAST ARM POLE (MAST ARM MOUNTED SIGNAL HEAD) (L = MAST ARM LENGTH - DISTANCE TO SIGNAL HEAD FROM END OF ARM)	20.0+L	6.0+L
BRACKET MOUNTED (MAST ARM POLE OR SIGNAL POLE)	13.0	4.0
PEDESTRIAN PUSH BUTTON	6.0	2.0
SERVICE INSTALLATION POLE MOUNT TO SERVICE DROP	13.5	4.1
SERVICE INSTALLATION POLE MOUNT TO GROUND	13.5	4.1
SERVICE INSTALLATION GROUND MOUNT	6.0	2.0
FOUNDATION (SIGNAL POST, MAST ARM POLE, CONTROLLER CABINET, SERVICE-GROUND MOUNT)	3.0	1.0

VERTICAL CABLE LENGTH

FOUNDATION	DEPTH
TYPE A - Signal Post	4'-0" (1.2m)
TYPE C - CONTROLLER W/ UPS	4'-0" (1.2m)
TYPE D - CONTROLLER	4'-0" (1.2m)
SERVICE INSTALLATION, GROUND MOUNT, TYPE A - SQUARE	4'-0" (1.2m)

DEPTH OF FOUNDATION

Mast Arm Length	① Foundation Depth	Foundation Diameter	Spiral Diameter	Quantity of Rebars	Size of Rebars
Less than 30' (9.1 m)	10'-0" (3.0 m)	30" (750mm)	24" (600mm)	8	6(19)
Greater than or equal to 30' (9.1 m) and less than 40' (12.2 m)	13'-6" (4.1 m)	30" (750mm)	24" (600mm)	8	6(19)
	11'-0" (3.4 m)	36" (900mm)	30" (750mm)	12	7(22)
Greater than or equal to 40' (12.2 m) and less than 50' (15.2 m)	13'-0" (4.0 m)	36" (900mm)	30" (750mm)	12	7(22)
Greater than or equal to 50' (15.2 m) and up to 55' (16.8 m)	15'-0" (4.6 m)	36" (900mm)	30" (750mm)	12	7(22)
Greater than or equal to 56' (16.8 m) and less than 65' (19.8 m)	21'-0" (6.4 m)	42" (1060mm)	36" (900mm)	16	8(25)
Greater than or equal to 65' (19.8 m) and up to 75' (22.9 m)	25'-0" (7.6 m)	42" (1060mm)	36" (900mm)	16	8(25)

NOTES:

1. These foundation depths are for sites which have cohesive soils (clayey silt, sandy clay, etc.) along the length of the shaft, with an average Unconfined Compressive Strength (Qu) > 1.0 tsf (100 kpa). This strength shall be verified by boring data prior to construction or with testing by the Engineer during foundation drilling. The Bureau of Bridges & structures should be contacted for a revised design if other conditions are encountered.
2. Combination mast arm assemblies under 55 feet (16.8 m) shall use 36" (900 mm) diameter foundations.
3. Combination mast arm assemblies under 56 feet (16.8 m) through 75 feet (22.9 m) shall use 42" (1060 mm) diameter foundations
4. For mast arm assemblies with dual arms refer to state standard 878001..

DEPTH OF MAST ARM FOUNDATIONS, TYPE E

TS SHT NO. 5

MODE.: Default
FILE NAME: pw:\\IL084EBIDINTEG.illinois.gov:PWIDOT\Documents\IDOT Offices\District 1\Projects\DistStd22x34\CADData\CADsheets\ts05.dgn

USER NAME = footemj	DESIGNED -	REVISED -	STATE OF ILLINOIS DEPARTMENT OF TRANSPORTATION
	DRAWN -	REVISED -	
PLOT SCALE = 50.0000 ' / in.	CHECKED -	REVISED -	
PLOT DATE = 3/4/2019	DATE -	REVISED -	

DISTRICT ONE
STANDARD TRAFFIC SIGNAL DESIGN DETAILS

SCALE: NONE | SHEET 5 OF 7 SHEETS | STA. TO STA.

F.A.I. RTE.	SECTION	COUNTY	TOTAL SHEETS	SHEET NO.
80	FAI 80 21 STRUCTURE 2	WILL	1230	494
		CONTRACT NO. 62R23		
		ILLINOIS FED. AID PROJECT		

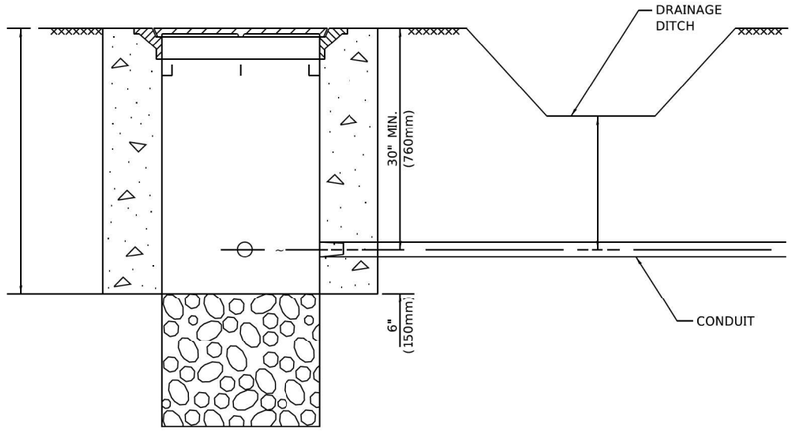

NOTES:

1. CONDUIT DEPTH SHALL BE A MINIMUM OF 30" (760mm) BELOW THE BOTTOM OF THE DRAINAGE DITCH OR ANY SLOPING GROUND
2. THE MINIMUM CONDUIT DEPTH APPLIES TO ALL CONDUIT PLACED UNDER ROADWAY PAVEMENT, MULTI-USE PATHS, SIDEWALKS AND SOIL SURFACES.
3. THE MINIMUM CONDUIT DEPTH APPLIES TO ALL HANDHOLES, HEAVY DUTY HANDHOLES AND DOUBLE HANDHOLES.

HANDHOLE WITH MINIMUM CONDUIT DEPTH

(NOT TO SCALE)

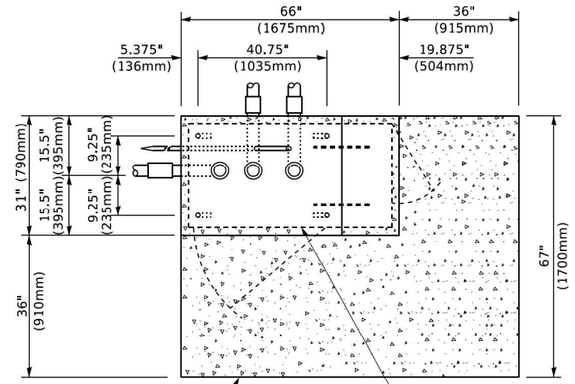

TOP VIEW

(NOT TO SCALE)

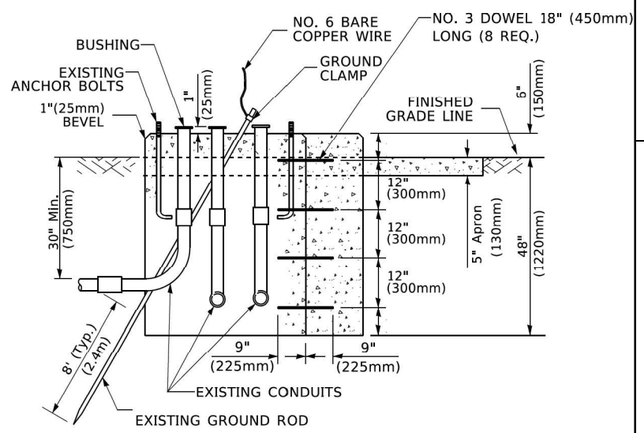

MODIFY EXISTING TYPE "D" FOUNDATION TO TYPE "C" FOUNDATION

(NOT TO SCALE)

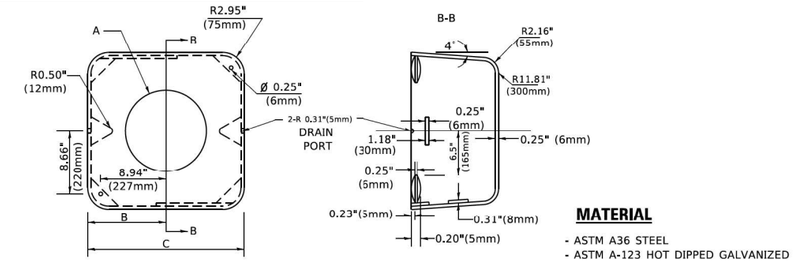

MATERIAL

- ASTM A36 STEEL
- ASTM A-123 HOT DIPPED GALVANIZED

A	B	C	HEIGHT	WEIGHT
VARIES	9.5"(241mm)	19"(483mm)	7" (178mm) - 12" (300mm)	53 lbs (24kg)
VARIES	10.75"(273mm)	21.5"(546mm)	7" (178mm) - 12" (300mm)	68 lbs (31 kg)
VARIES	13.0"(330mm)	26"(660mm)	7" (178mm) - 12" (300mm)	81 lbs (37 kg)
VARIES	18.5"(470mm)	37"(940mm)	7" (178mm) - 12" (300mm)	126 lbs (57 kg)

SHROUD

NOTES:

1. DIMENSION "A" IS EQUAL TO THE DIAMETER OF THE MAST ARM POLE AT THE TOP OF THE SHROUD. THE SHROUD SHALL BE TIGHT TO THE MAST ARM POLE.
2. THE SUPPLIER SHALL VERIFIED THE ABOVE DIMENSIONS BASED ON MAST ARM REQUIREMENTS.
3. THE HEIGHT OF THE SHROUD SHALL COVER THE ANCHOR BOLTS, NUTS AND MAST ARM POLE BASE.

NOTE:

SUPPORT EXISTING CABINET AND CONTROL EQUIPMENT ABOVE FOUNDATION TO KEEP TRAFFIC SIGNAL FUNCTIONING WHILE FOUNDATION MODIFICATION WORK IS PROCEEDING.

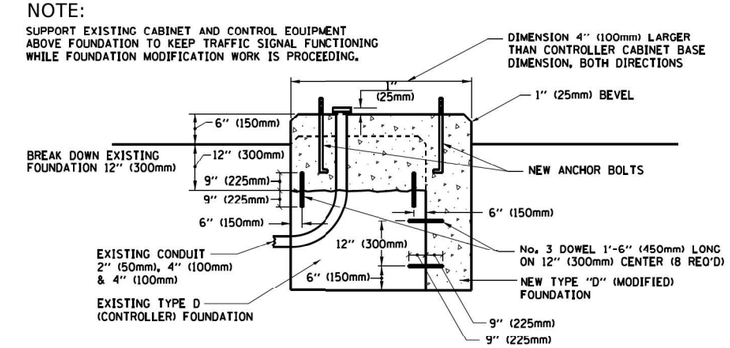

MODIFY EXISTING TYPE "D" FOUNDATION

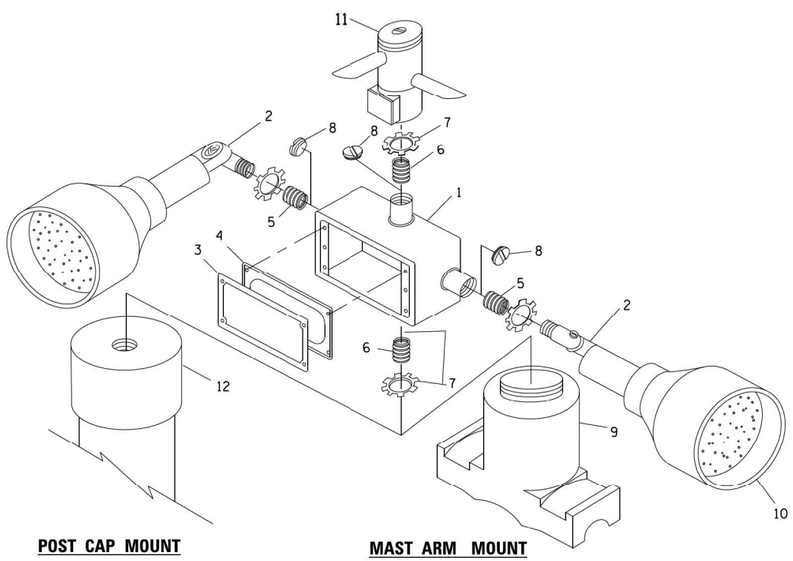

POST CAP MOUNT

MAST ARM MOUNT

EMERGENCY VEHICLE DETECTOR WITH CONFIRMATION BEACON MOUNTING DETAIL

ITEM NO.	IDENTIFICATION
1	OUTLET BOX- GALV. 21 CU.IN. (0.000344 CU-M)
2	LAMP HOLDER AND COVER
3	OUTLET BOX COVER
4	RUBBER COVER GASKET
5	REDUCING BUSHING
6	¾"(19 mm) CLOSE NIPPLE
7	¾"(19 mm) LOCKNUT
8	¾"(19 mm) HOLE PLUG
9	SADDLE BRACKET - GALV.
10	6 WATT PAR 38 LED FLOOD LAMP
11	DETECTOR UNIT
12	POST CAP [18 FT. (5.4 m) POST MIN.]

NOTES:

1. ALL ELECTRICAL ITEMS, EXCEPT ITEMS #2 AND #11 SHALL BE ALUMINUM OR GALVANIZED
2. ITEM #1- OZ/GEDNEY FSX-1-50 OR EQUIVALENT
   ITEM #2- MULBERRY CON-O-SHADE LAMP SHIELD OR EQUIVALENT
   ITEM #9- "BAND-IT" SADDLE BRACKET OR EQUIVALENT
3. WHEN POST MOUNTING IS SPECIFIED, ITEM #9 SHALL NOT BE REQUIRED. THE DETECTION UNIT SHALL BE MOUNTED DIRECTLY ON TOP OF THE CAP BY DRILLING AND TAPPING A 3/4 "(19 mm) HOLE WITH PIPE THREADS. THE POST CAP SHALL EITHER BE SCREWED TO THE TOP OF THE POST OR A MINIMUM OF 3 TIGHTENING SCREWS SHALL BE REQUIRED ON EACH CAP.

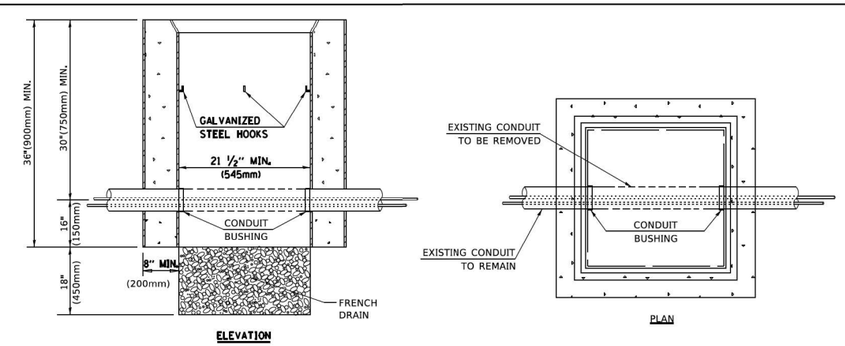

NOTES:

1. HANDHOLE CONSTRUCTED PER STATE STANDARD 814001.
2. REMOVAL OF THE EXISTING CONDUIT FROM THE HANDHOLE AND THE INSTALLATION OF THE CONDUIT BUSHINGS SHALL BE INCLUDED WITH THE COST OF THE HANDHOLE.

HANDHOLE TO INTERCEPT EXISTING CONDUIT

TS SHT NO. 6

MODE: Default
FILE NAME: pw:\\IL084EBIDINTEG.illinois.gov:PWIDOT\Documents\IDOT Offices\District 1\Projects\District22x34\CADData\CADsheets\ts05.dgn

USER NAME = footemj	DESIGNED -	REVISED -	
	DRAWN -	REVISED -	
PLOT SCALE = 50.0000 ' / in.	CHECKED -	REVISED -	
PLOT DATE = 3/4/2019	DATE -	REVISED -	

STATE OF ILLINOIS
DEPARTMENT OF TRANSPORTATION

DISTRICT ONE
STANDARD TRAFFIC SIGNAL DESIGN DETAILS

SCALE: NONE | SHEET 6 OF 7 SHEETS | STA. TO STA.

F.A.I. RTE.	SECTION	COUNTY	TOTAL SHEETS	SHEET NO.
80	FAI 80 21 STRUCTURE 2	WILL	1230	495
		CONTRACT NO. 62R23		
		ILLINOIS FED. AID PROJECT		

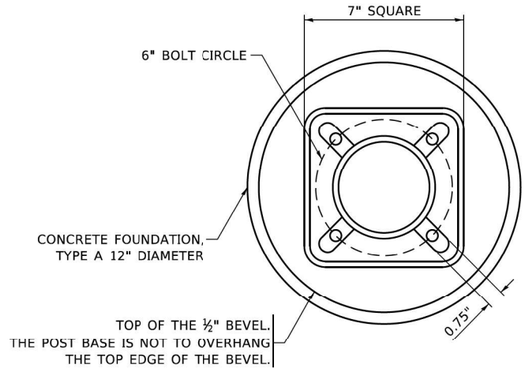

BOLT PATTERN

NOTE:

1. IF THE PEDESTRIAN SIGNAL POST FOUNDATION IS INSTALLED WITHIN OR BEHIND A BARRIER CURB, THE TOP OF THE FOUNDATION SHALL BE INSTALLED FLUSH WITH THE TOP OF THE BARRIER CURB.

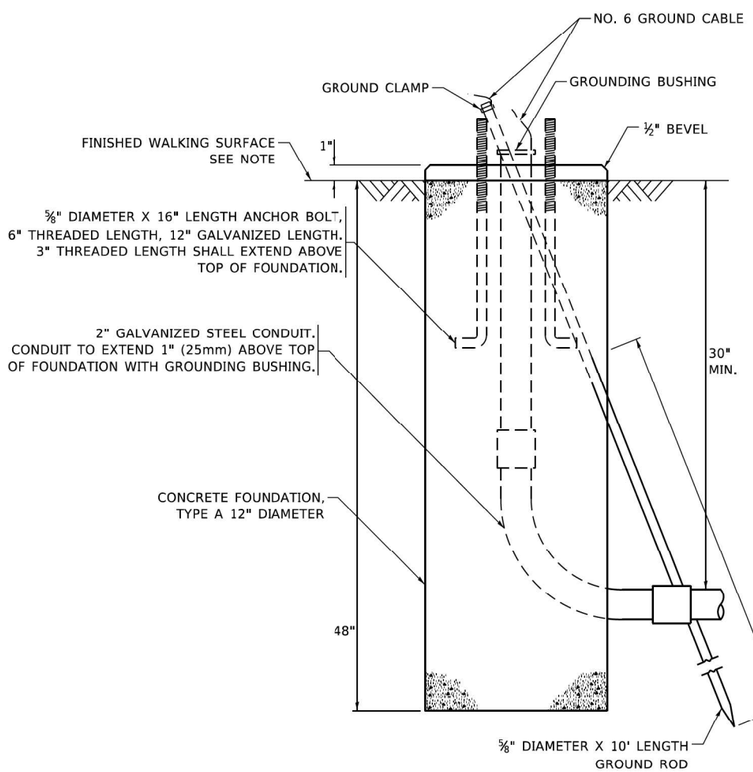

CONCRETE FOUNDATION, TYPE A 12-INCH DIAMETER

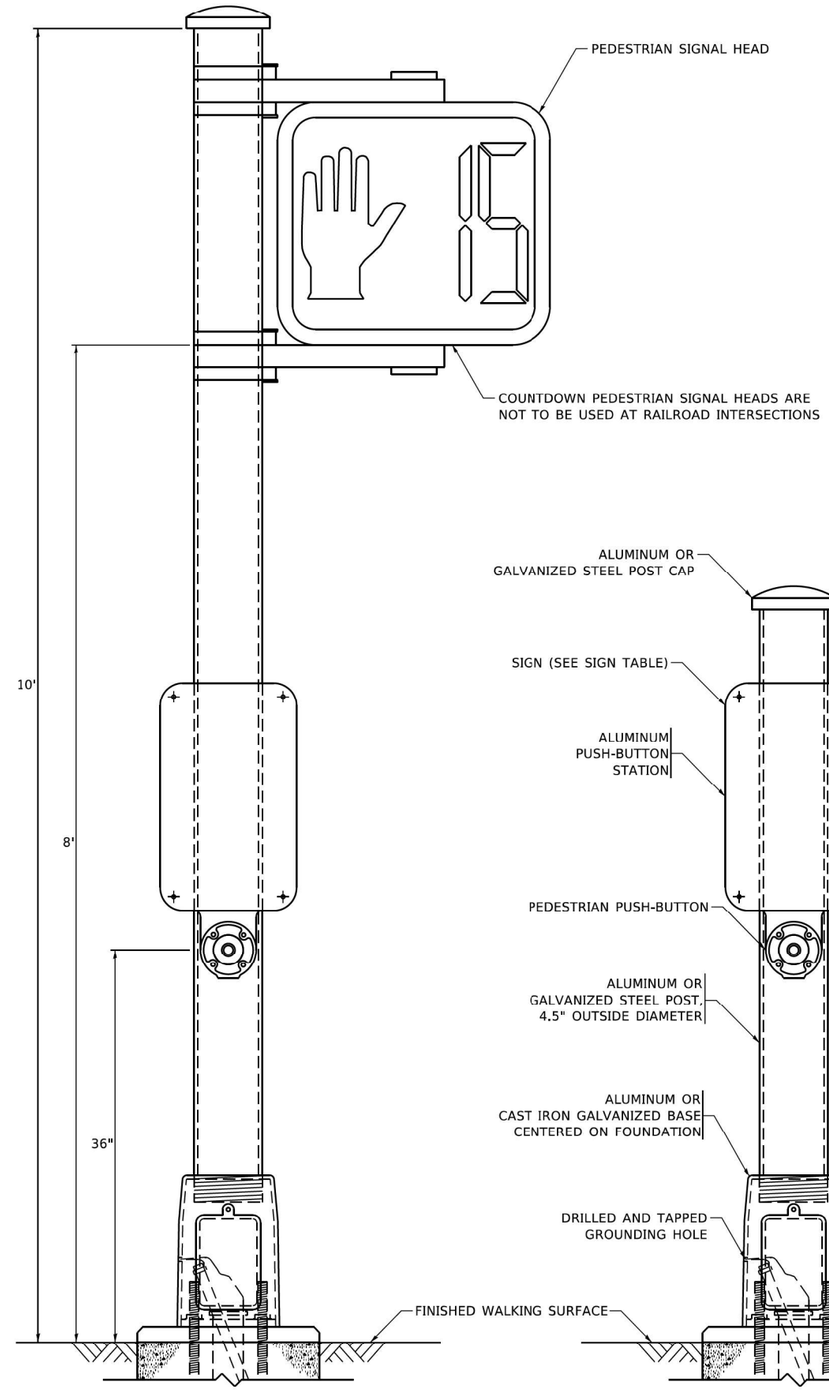

PEDESTRIAN SIGNAL POST, 10 FT.

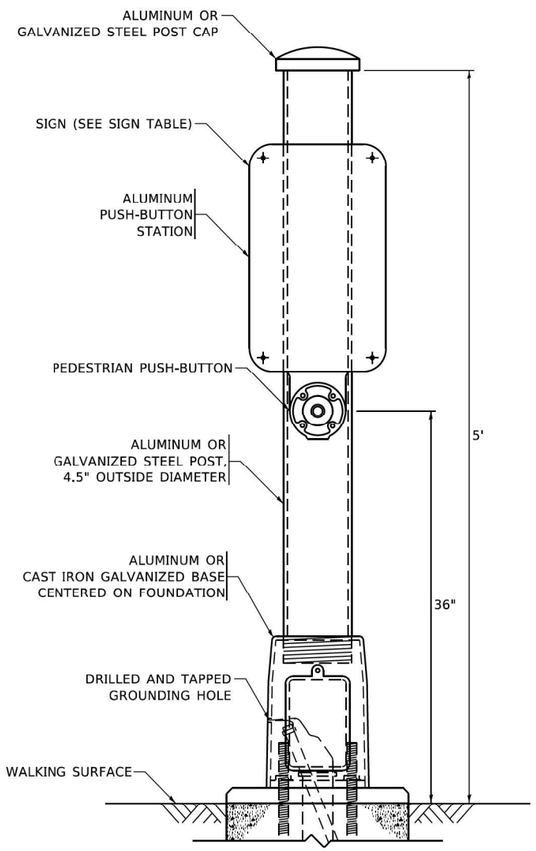

PEDESTRIAN SIGNAL POST, 5 FT.

R10–3b

R10–3d

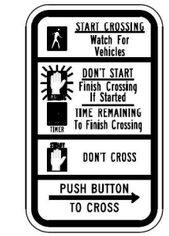

R10–3e

SIGN TABLE

SIGN	DIMENSIONS
R10-3b (RAILROAD ONLY)	9" X 12"
R10-3d (RAILROAD ONLY)	9" X 12"
R10-3e	9" X 12"

NOTES:

1. THE SIGN PANELS SHALL BE TYPE AP SHEETING.
2. THE ARROW ON SIGNS FOR PUSH-BUTTONS SERVING TWO DIRECTIONS ON THE SAME PHASE SHALL BE BI-DIRECTIONAL.
3. THE SIGN FOR DUAL-CALL PUSH-BUTTONS SHALL HAVE NO ARROW.

TS SHT NO. 7

MODEL: Default
FILE NAME: pw:\\planroom.dot.illinois.gov:PWIDOT\Documents\IDOT Offices\District 1\Projects\DistStd22x34\CADData\CADsheets\ts05.dgn

USER NAME = gagllanobt	DESIGNED - IP	REVISED - 10-15-2020	
	DRAWN - IP	REVISED -	
PLOT SCALE = 100.0000 ' / in.	CHECKED - LP	REVISED -	
PLOT DATE = 11/23/2020	DATE - 10-15-2018	REVISED -	

STATE OF ILLINOIS
DEPARTMENT OF TRANSPORTATION

DISTRICT ONE
STANDARD TRAFFIC SIGNAL DESIGN DETAILS

SCALE: NONE | SHEET 7 OF 7 SHEETS | STA. TO STA.

F.A.I. RTE.	SECTION	COUNTY	TOTAL SHEETS	SHEET NO.
80	FAI 80 21 STRUCTURE 2	WILL	1230	496

CONTRACT NO. 62R23

ILLINOIS | FED. AID PROJECT

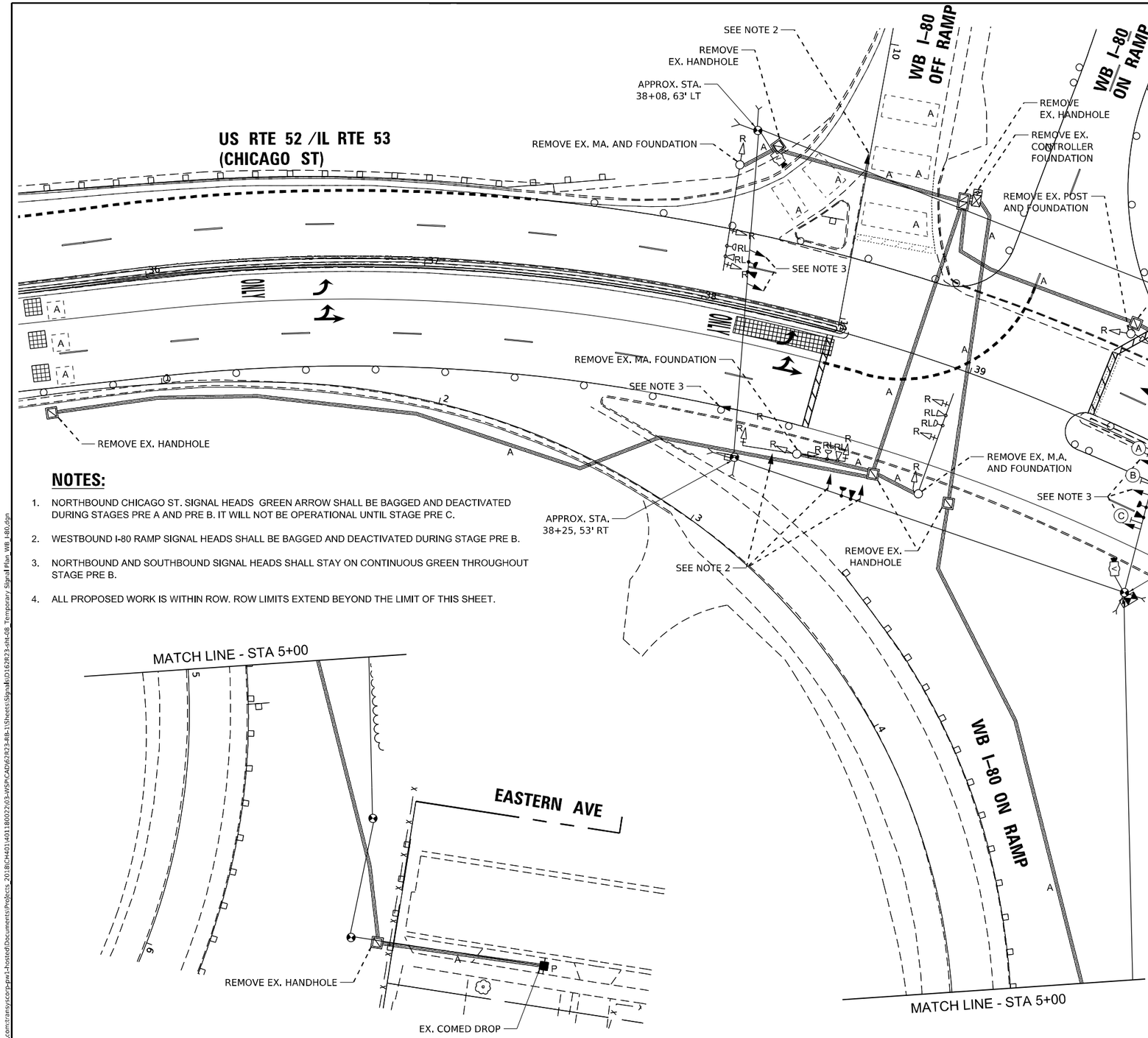

NOTES:

1. NORTHBOUND CHICAGO ST. SIGNAL HEADS GREEN ARROW SHALL BE BAGGED AND DEACTIVATED DURING STAGES PRE A AND PRE B. IT WILL NOT BE OPERATIONAL UNTIL STAGE PRE C.
2. WESTBOUND I-80 RAMP SIGNAL HEADS SHALL BE BAGGED AND DEACTIVATED DURING STAGE PRE B.
3. NORTHBOUND AND SOUTHBOUND SIGNAL HEADS SHALL STAY ON CONTINUOUS GREEN THROUGHOUT STAGE PRE B.
4. ALL PROPOSED WORK IS WITHIN ROW. ROW LIMITS EXTEND BEYOND THE LIMIT OF THIS SHEET.

REMOVAL AND RELOCATION NOTES:

THE FOLLOWING ITEMS SHALL BE REMOVED BY THE CONTRACTOR AND SHALL BE DISPOSED OF BY THEM OUTSIDE THE RIGHT-OF-WAY AT THEIR EXPENSE. THE SALVAGE VALUE OF THE REMOVED EQUIPMENT SHALL BE REFLECTED IN THE CONTRACT BID PRICE.

1	EACH	CONTROLLER (ASC/2S-2100) AND CABINET (TS1) (COMPLETE)
3	EACH	MAST ARM ASSEMBLY AND POLE
1	EACH	TRAFFIC SIGNAL POST
12	EACH	SIGNAL HEAD, 1 FACE, 3 SECTION
1	EACH	SERVICE INSTALLATION
6	EACH	TRAFFIC SIGNAL BACKPLATE
1	EACH	UNINTERRUPTABLE POWER SUPPLY
1	EACH	MICROWAVE VEHICLE DETECTOR

THE FOLLOWING EXISTING TRAFFIC SIGNAL EQUIPMENT SHALL BE REMOVED BY THE CONTRACTOR, SAFELY STORED AND RELOCATED TO THE PROPOSED SPAN WIRES AND TRAFFIC SIGNAL CONTROLLER

3	EACH	CONFIRMATION BEACON
3	EACH	LIGHT DETECTOR
1	EACH	LIGHT DETECTOR AMPLIFIER

R3-5A
30" X 36"
SIGN PANEL - TYPE 1
1 REQUIRED
(A)

R3-6L
30" X 36"
SIGN PANEL - TYPE 1
1 REQUIRED
(B)

R3-5L
30" X 36"
SIGN PANEL - TYPE 1
1 REQUIRED
(C)

NOTES (CONTINUED):

5. IT IS THE RESPONSIBILITY OF THE CONTRACTOR TO RELOCATE, ALIGN AND REMOVE SIGNAL HEAD ASSEMBLIES AS REQUIRED TO FOLLOW THE ARRANGEMENT SHOWN ON THE PLANS AND/OR AS DIRECTED BY THE ENGINEER. APPROXIMATELY 50FT OF EXTRA CABLE SHALL BE PROVIDED ON THE SPAN WIRE FOR EACH SIGNAL HEAD ASSEMBLY TO FACILITATE RELOCATION DURING CONSTRUCTION STAGING. THIS SHALL BE INCLUDED IN THE CONTRACT UNIT PRICE FOR MAINTENANCE OF EXISTING TRAFFIC SIGNAL INSTALLATION.
6. IT IS THE RESPONSIBILITY OF THE CONTRACTOR TO MODIFY EXISTING CONTROLLER AS REQUIRED TO FOLLOW THE ARRANGEMENT SHOWN ON THE PLANS AND/OR AS DIRECTED BY THE ENGINEER. THIS SHALL BE INCLUDED IN THE CONTRACT UNIT PRICE FOR MAINTENANCE OF EXISTING TRAFFIC SIGNAL INSTALLATION.
7. THE EXISTING SERVICE METER SHALL BE RELOCATED TO THE PROPOSED GROUND MOUNTED SERVICE CABINET. THIS WORK SHALL BE INCLUDED IN THE PAY ITEM SERVICE INSTALLATION, GROUND MOUNTED, METERED.

TS 21820
ECON 72

0 20 40 60
SCALE IN FEET

TS SHT NO. 8

MODEL: Default
FILE NAME: pw:\\transystems-pw.bentley.com:transyscorp-pw1-hosted\Documents\Projects_2018\CH401\401800\2203-WSP\CAD\62R23-RB-1\Sheets\Signal\D162R23-sht-08_Temporary Signal Plan_WB I-80.dgn

SINGH + ASSOCIATES, INC
CONSULTING ENGINEERS

USER NAME = ggedemer	DESIGNED - GJG	REVISED -	
	DRAWN - GJG	REVISED -	
PLOT SCALE = 40.000 ' / in.	CHECKED - SSA	REVISED -	
PLOT DATE = 11/5/2025	DATE - 11/7/2025	REVISED -	

STATE OF ILLINOIS
DEPARTMENT OF TRANSPORTATION

TEMPORARY TRAFFIC SIGNAL INSTALLATION PLAN (STAGE 4A) AND REMOVAL EXISTING TRAFFIC SIGNAL EQUIPMENT PLAN
US RTE 52 /IL RTE 53 (CHICAGO ST) AT WB I-80 RAMPS

SCALE: 1" = 20' | SHEET OF SHEETS | STA. TO STA.

F.A.I. RTE.	SECTION	COUNTY	TOTAL SHEETS	SHEET NO.
80	FAI 80 21 STRUCTURE 2	WILL	1230	497
		CONTRACT NO. 62R23		
	ILLINOIS	FED. AID PROJECT		

PROPOSED CONTROLLER SEQUENCE

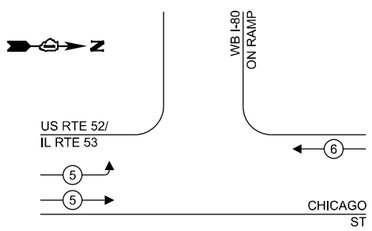

LEGEND:

- PROTECTED PHASE
- PROTECTED/PERMITTED PHASE
- PEDESTRIAN PHASE
- OL — OVERLAP

PROPOSED EMERGENCY VEHICLE PREEMPTION SEQUENCE

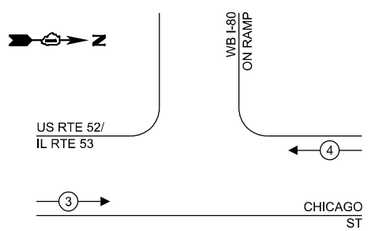

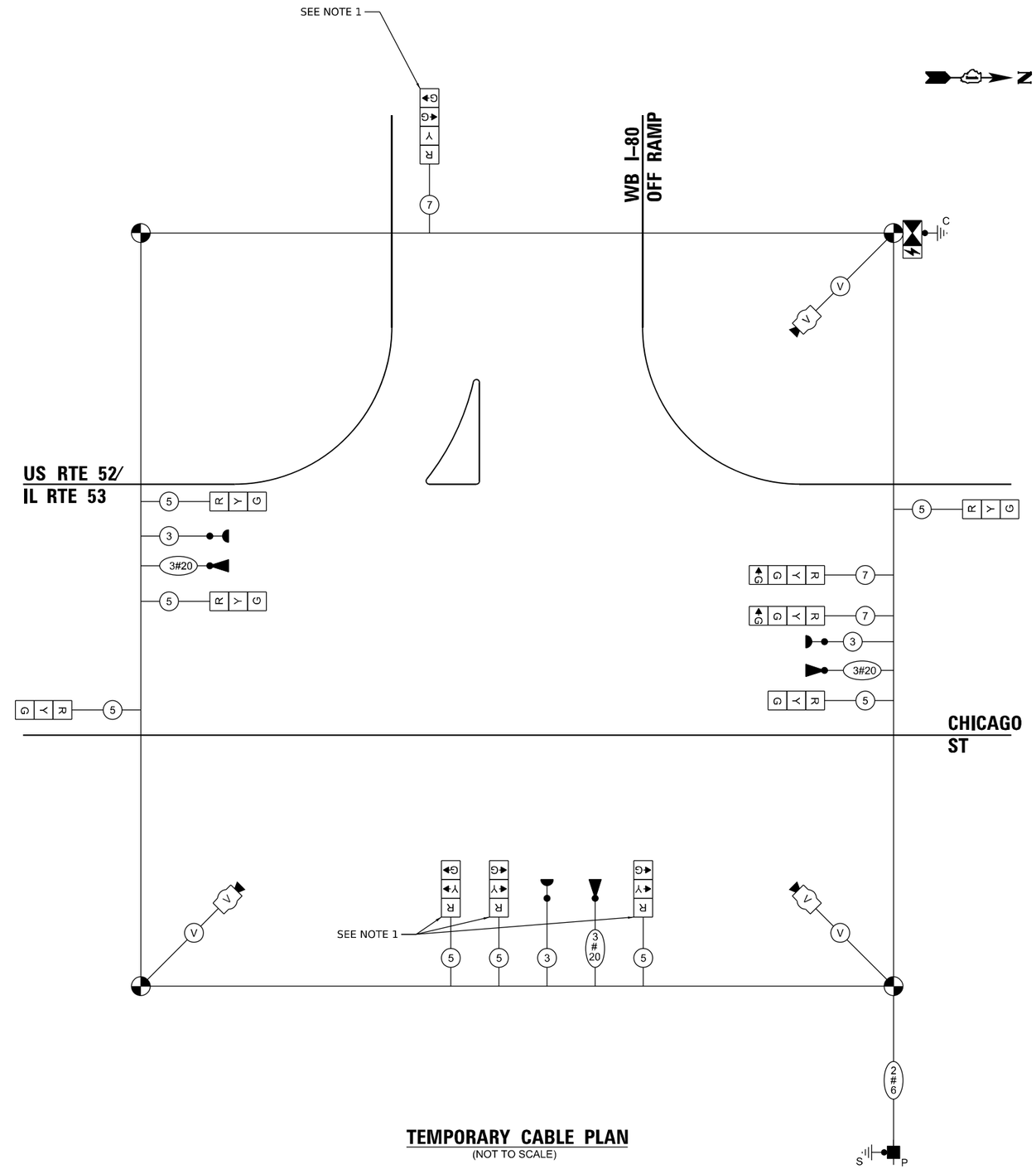

TEMPORARY CABLE PLAN

(NOT TO SCALE)

NOTES:

1. WESTBOUND I-80 RAMP SIGNAL HEADS SHALL BE BAGGED AND DEACTIVED DURING STAGES 4A. THEY WILL NOT BE OPERATIONAL UNTIL STAGE 5B.
2. EVP EQUIPMENT TO BE RELOCATED FROM EXISTING TRAFFIC SIGNALS.

TRAFFIC SIGNAL ELECTRICAL SERVICE REQUIREMENTS

EQUIPMENT TYPE	QUANTITY	UNIT WATTAGE	TOTAL WATTAGE
SIGNAL HEAD 1 OR 3-SECTION	8	11	88
4-SECTION	3	14	42
5-SECTION	-	13	-
PROGRAMMABLE 3-SECTION	-	22	-
4-SECTION	-	32	-
5-SECTION	-	28	-
PEDESTRIAN SIGNAL	-	15	-
CONTROLLER	1	150	150
MASTER CONTROLLER	-	100	-
UPS	1	25	25
DETECTION RADAR OR VIDEO	1	20	20
BLANK-OUT SIGN	-	25	-
NETWORK SWITCH II OR III	-	35	-
CELLULAR MODEM	-	15	-
TOTAL UPS SIZING			325
UPS CHARGING	1	225	225
BATTERY HEATER MAT	1	180	180
CABINET HEATER	1	200	200
FLASHER	-	15	-
LED STREET NAME SIGN	-	120	-
LUMINAIRE	-	240	-
TOTAL SERVICE WIRE SIZING			930

ENERGY COSTS TO:
ILLINOIS DEPARTMENT OF TRANSPORTATION
DIVISION OF HIGHWAY/DISTRICT 1
201 WEST CENTER COURT/SCHAUMBURG, IL 60196-1096

ENERGY SUPPLY: CONTACT: COMED NEW BUSINESS
PHONE: (866) 639-3532
COMPANY: COMED
ACCOUNT NUMBER: 14311 - 22272
METER NUMBER: -

TS SHT NO. 9

TS 21820
ECON 72

MODEL: Default
FILE NAME: pw:\\transystems-pw.bentley.com:transyscorp-pw1-hosted\Documents\Projects_2018\CH401\401180022\03-WSP\CAD\62R23-Rt8-1\Sheets\SignalIO\62R23-sht-09_Temporary Signal Cable Plan WB I 80.dgn

SINGH + ASSOCIATES, INC.
CONSULTING ENGINEERS

USER NAME = ggedemer	DESIGNED - GJG	REVISED -	
	DRAWN - GJG	REVISED -	
PLOT SCALE = 40.000 ' / in.	CHECKED - SSA	REVISED -	
PLOT DATE = 11/5/2025	DATE - 11/7/2025	REVISED -	

STATE OF ILLINOIS
DEPARTMENT OF TRANSPORTATION

TEMPORARY CABLE PLAN, PHASE DESIGNATION DIAGRAM, AND EMERGENCY VEHICLE PREEMPTION SEQUENCE US RTE 52 /IL RTE 53 (CHICAGO ST) AT WB I-80 RAMPS (STAGE 4A)

SCALE: 1" = 20' | SHEET OF SHEETS | STA. TO STA.

F.A.I. RTE.	SECTION	COUNTY	TOTAL SHEETS	SHEET NO.
80	FAI 80 21 STRUCTURE 2	WILL	1230	498
		CONTRACT NO. 62R23		
	ILLINOIS	FED. AID PROJECT		

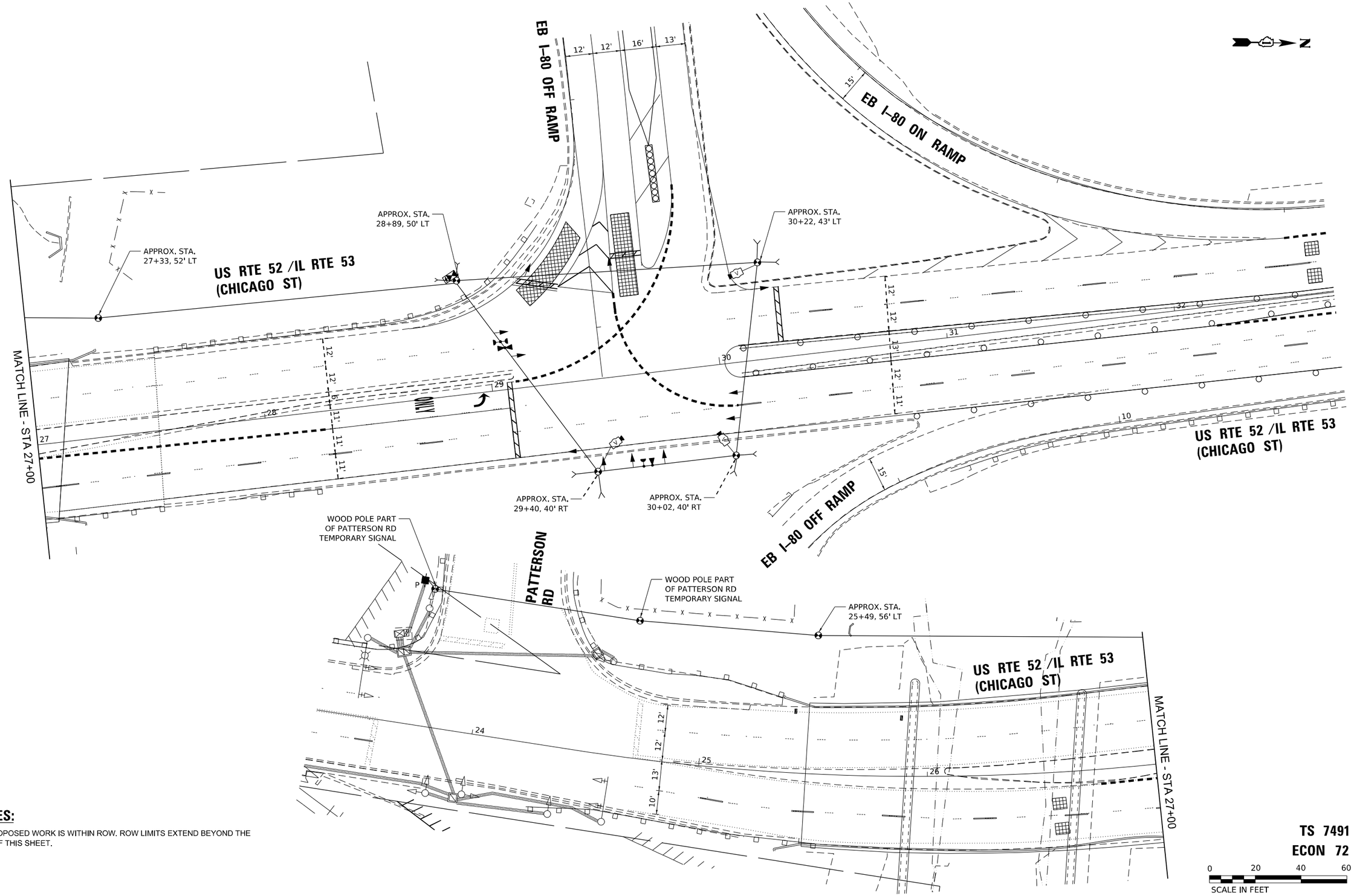

NOTES:

1. ALL PROPOSED WORK IS WITHIN ROW. ROW LIMITS EXTEND BEYOND THE LIMIT OF THIS SHEET.

TS 7491
ECON 72

0 20 40 60
SCALE IN FEET

TS SHT NO. 10

MODEL: Default
FILE NAME: pw:\\transystems-pw.bentley.com:transyscorp-pw1-hosted\Documents\Projects_2018\CH401\401180022\03-WSP\CAD\62R23-RB-1\Sheets\Signal\D162R23-sht-10 Temporary Signal Plan EB I-80.dgn

SINGH
SINGH + ASSOCIATES, INC.
CONSULTING ENGINEERS

USER NAME = ggedemer	DESIGNED - GJG	REVISED -	
	DRAWN - GJG	REVISED -	
PLOT SCALE = 40.000 ' / in.	CHECKED - EEC	REVISED -	
PLOT DATE = 11/5/2025	DATE - 11/7/2025	REVISED -	

STATE OF ILLINOIS
DEPARTMENT OF TRANSPORTATION

TEMPORARY TRAFFIC SIGNAL INSTLATION PLAN
(STAGE 3–SUBSTAGE AND STAGE 4A)
US RTE 52 /IL RTE 53 (CHICAGO ST) AT EB I–80 RAMPS

SCALE: 1" = 20' | SHEET OF SHEETS | STA. TO STA.

F.A.I. RTE.	SECTION	COUNTY	TOTAL SHEETS	SHEET NO.
80	FAI 80 21 STRUCTURE 2	WILL	1230	499
		CONTRACT NO. 62R23		
	ILLINOIS	FED. AID PROJECT		

PROPOSED CONTROLLER SEQUENCE

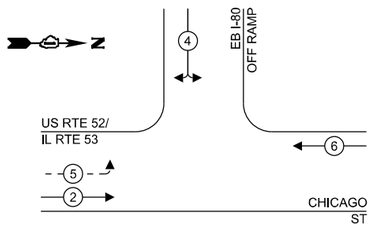

LEGEND:

- PROTECTED PHASE
- PROTECTED/PERMITTED PHASE
- PEDESTRIAN PHASE
- OL — OVERLAP

PROPOSED EMERGENCY VEHICLE PREEMPTION SEQUENCE

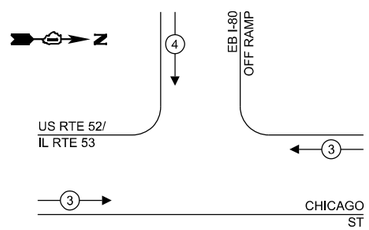

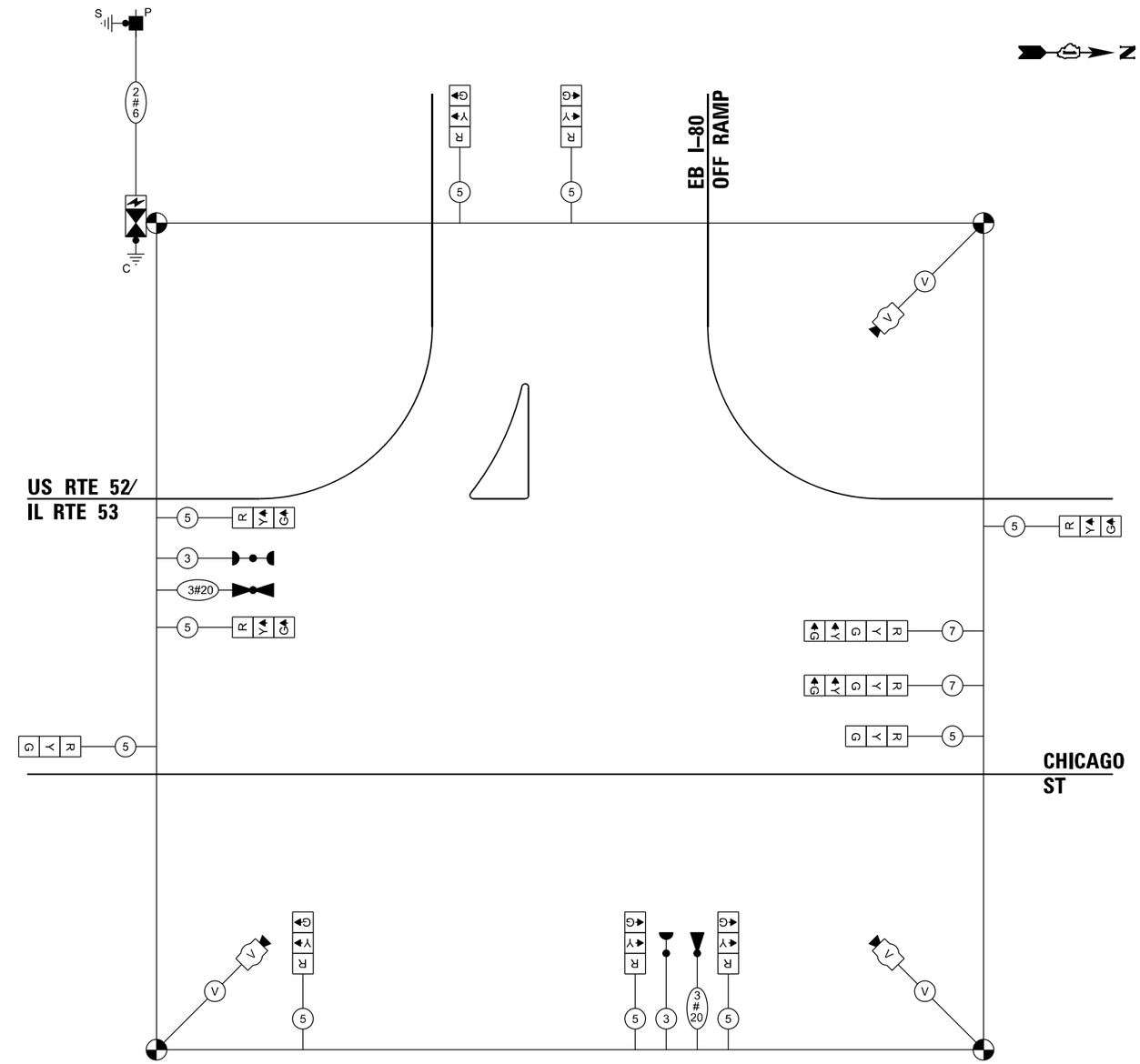

TEMPORARY CABLE PLAN

(NOT TO SCALE)

TRAFFIC SIGNAL ELECTRICAL SERVICE REQUIREMENTS

EQUIPMENT TYPE		QUANTITY	UNIT WATTAGE	TOTAL WATTAGE
SIGNAL HEAD	1 OR 3-SECTION	11	11	121
	4-SECTION	-	14	-
	5-SECTION	2	13	26
PROGRAMMABLE	3-SECTION	-	22	-
	4-SECTION	-	32	-
	5-SECTION	-	28	-
PEDESTRIAN SIGNAL		-	15	-
CONTROLLER		1	150	150
MASTER CONTROLLER		-	100	-
UPS		1	25	25
DETECTION	RADAR OR VIDEO	3	20	60
BLANK-OUT SIGN		-	25	-
NETWORK SWITCH	II OR III	-	35	-
CELLULAR MODEM		-	15	-
TOTAL UPS SIZING				382
UPS CHARGING		1	225	225
BATTERY HEATER MAT		1	180	180
CABINET HEATER		1	200	200
FLASHER		-	15	-
LED STREET NAME SIGN		-	120	-
LUMINAIRE		-	240	-
TOTAL SERVICE WIRE SIZING				987

ENERGY COSTS TO:
ILLINOIS DEPARTMENT OF TRANSPORTATION
DIVISION OF HIGHWAY/DISTRICT 1
201 WEST CENTER COURT/SCHAUMBURG, IL 60196-1096

ENERGY SUPPLY:
CONTACT: COMED NEW BUSINESS
PHONE: (866) 639-3532
COMPANY: COMED
ACCOUNT NUMBER: 14311 - 22272
METER NUMBER: -

TS SHT NO. 11

TS 7491
ECON 72

MODEL: Default
FILE NAME: pw:\\transystems-pw.bentley.com:transyscorp-pw1-hosted\Documents\Projects_2018\CH401\401180022\03-WSP\CAD\62R23-elB-11\Sheets\Signal\D162R23-sht-11_Temporary Signal Cable Plan_EB_I-80.dgn

SINGH
SINGH + ASSOCIATES, INC.
CONSULTING ENGINEERS

USER NAME = ggedemer	DESIGNED - GJG	REVISED -	
	DRAWN - GJG	REVISED -	
PLOT SCALE = 40.000 ' / in.	CHECKED - EEC	REVISED -	
PLOT DATE = 11/5/2025	DATE - 11/7/2025	REVISED -	

STATE OF ILLINOIS
DEPARTMENT OF TRANSPORTATION

TEMPORARY CABLE PLAN, PHASE DESIGNATION DIAGRAM, AND EMERGENCY VEHICLE PREEMPTION SEQUENCE
US RTE 52 /IL RTE 53 (CHICAGO ST) AT EB I-80 RAMPS

SCALE: NONE | SHEET OF SHEETS | STA. TO STA.

F.A.I. RTE.	SECTION	COUNTY	TOTAL SHEETS	SHEET NO.
80	FAI 80 21 STRUCTURE 2	WILL	1230	500
		CONTRACT NO. 62R23		
		ILLINOIS	FED. AID PROJECT	