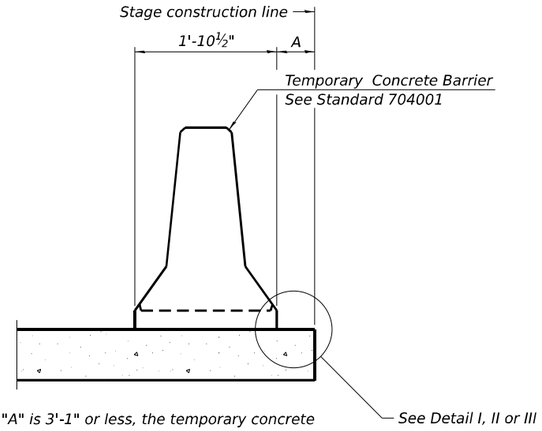

When "A" is 3'-1" or less, the temporary concrete barrier shall be restrained to the new slab according to Detail I, II or III. No restraint is required when "A" is greater than 3'-1".

NEW SLAB OR NEW DECK BEAM

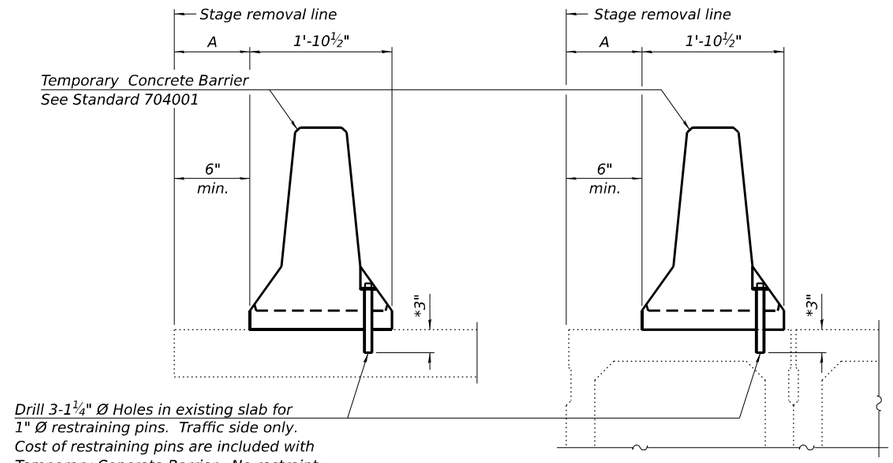

EXISTING SLAB

* When hot-mix asphalt wearing surface is present, embedment shall be 3" plus the wearing surface depth.

EXISTING DECK BEAM

SECTIONS THRU SLAB OR DECK BEAM

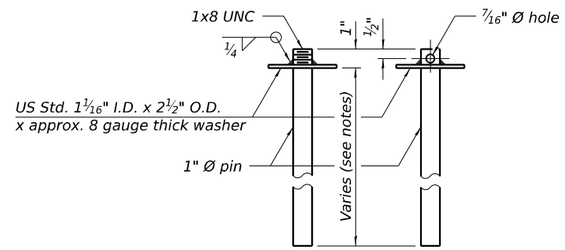

RESTRAINING PIN

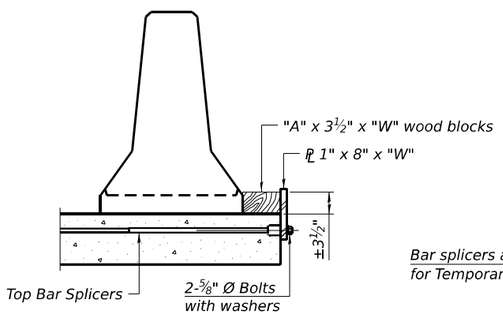

DETAIL I

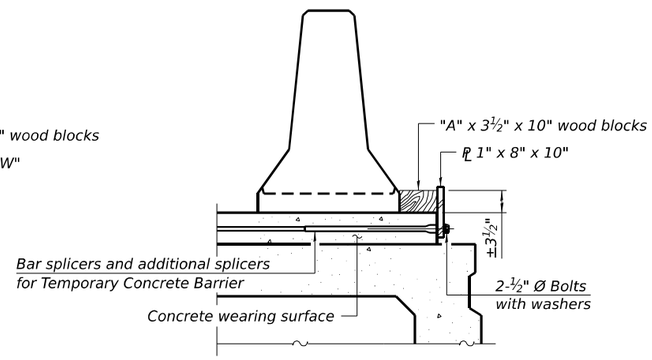

DETAIL II

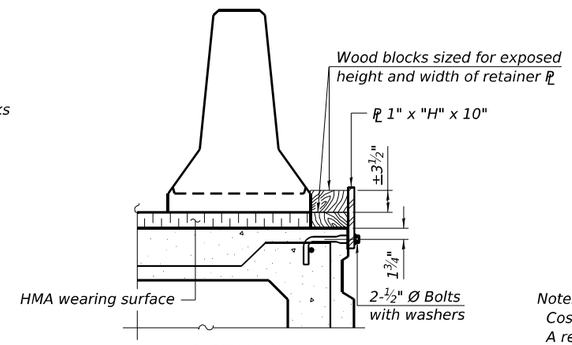

DETAIL III

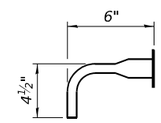

BAR SPLICER FOR #4 BAR - DETAIL III

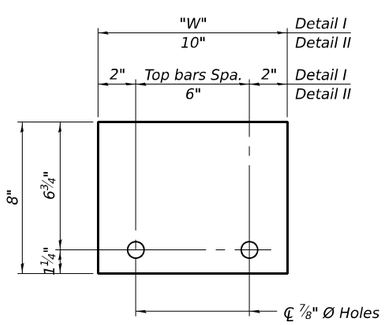

STEEL RETAINER PL 1" x 8" x "W"

(Detail I and II)

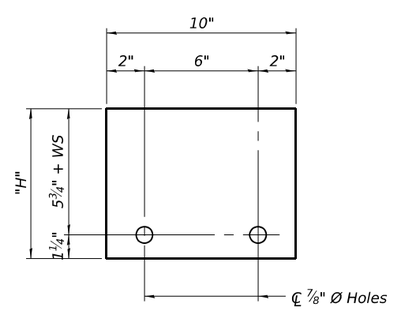

STEEL RETAINER PL 1" x "H" x 10"

(Detail III)

RAILING CRITERIA

NCHRP 350 Test Level	3
Railing Weight (plf)	440

Notes:

Cost of retainer assembly is included with Temporary Concrete Barrier.

A retainer assembly shall be located at the approximate ℄ of each temporary concrete barrier.

The retainer plate shall not be removed until the concrete on the adjacent stage is ready to be poured. For Detail III applications the retainer plate shall not be removed until just prior to placing the adjacent beam.

When the 'A' dimension is less than 1½", the wood block shall be omitted and the barrier shall be placed in direct contact with the steel retainer plate. For deck beam applications the minimum required 'A' distance is 6" to accommodate the shear key clamping device.

Detail I - Installation for a new bridge deck or bridge slab.

Detail II - Installation for a new deck beam with an initial concrete wearing surface. Additional bar splicers shall be provided at 6'-0" centers and paired with the bar splicers of the concrete wearing surface reinforcement to accommodate the installation of the retainer assemblies. The cost of the additional bar splicers is included with the concrete wearing surface.

Detail III - Installation for a new deck beam with no initial wearing surface or with an initial hot-mix asphalt (HMA) wearing surface present. The deck beam directly beneath the temporary concrete barrier shall be fabricated with bar splicer inserts in the side of the beam, as detailed, to accommodate the installation of the retainer assemblies. A pair of bar splicers, 6" apart, shall be placed at 6'-0" centers along the length of the beam. The cost of the bar splicers is included with the deck beam.

R-27

5-15-2023

WSP USA Inc.
30 N. LASALLE STREET
SUITE 4200
CHICAGO, IL 60602
TEL: (312) 782-8150
FAX: (312) 782-1684

USER NAME = USSJ696614	DESIGNED - SJJ	REVISED -	
	CHECKED - PJL	REVISED -	
PLOT SCALE = 0:2.0000 ':" / in.	DRAWN - SJJ	REVISED -	
PLOT DATE = 11/5/2025	CHECKED - PJL	REVISED -	

STATE OF ILLINOIS
DEPARTMENT OF TRANSPORTATION

TEMPORARY CONCRETE BARRIER
STRUCTURE NUMBER 099-8309 WB AND 099-8325 EB

SHEET S-20 OF S-333 SHEETS

F.A.I RTE.	SECTION	COUNTY	TOTAL SHEETS	SHEET NO.
I-80	FAI 80 21 STRUCTURE 2	WILL	1230	601
		CONTRACT NO. 62R23		
		ILLINOIS	FED. AID PROJECT	

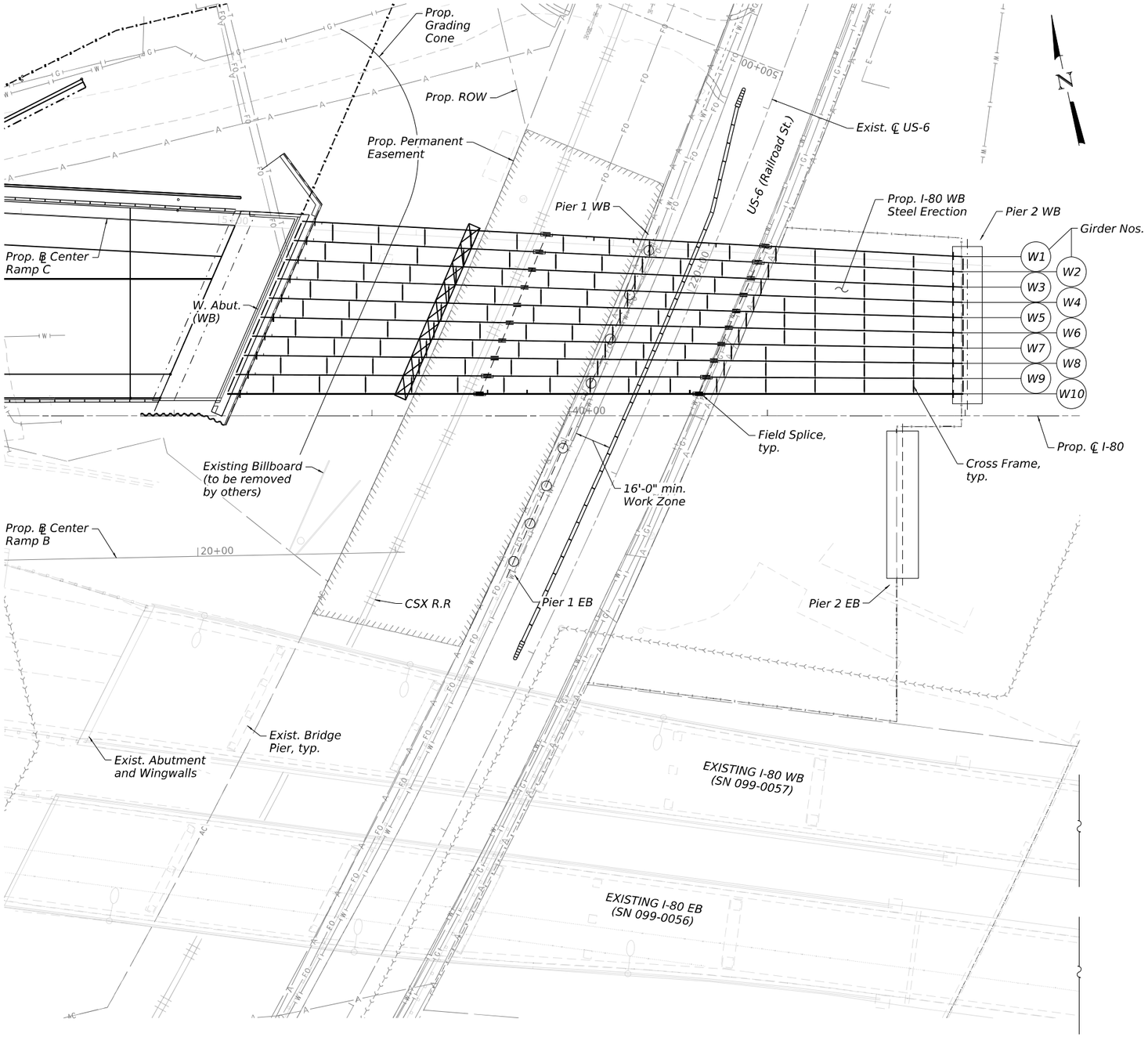

PLAN - CONCEPTUAL ERECTION UNIT 1 WB

LEGEND

- Existing Right-of-Way
- Proposed Permanent Easement
- Temporary Support
- Temporary MSE Wall
- Temporary Concrete Barrier

NOTES:

1. The erection of the structural steel shall be accomplished by a steel erection contractor or sub-contractor certified as a Certified Structural Steel Erector (ACSE) with Bridge Erection Endorsement by AISC. See special provisions for "Erections of Complex Steel Structures."

2. The erection stages shown on sheets S-21 thru S-23 are presented only as a conceptual erection procedure. All intermediate stages of erection, temporary restraining devices, temporary supports, jacking devices, crane locations, etc. that may be necessary are not shown. The Contractor may submit for approval an alternate procedure, or modify the conceptual procedure provided. The conceptual erection sequence shown is provided for information only and is not all-inclusive, and does not relieve the Contractor of the requirement to submit a steel erection plan prepared and sealed by a Licensed Structural Engineer in Illinois.

3. Refer to the CSX Transportation (CSXT) Public Project Information Manual for additional requirements needed for working on/above/adjacent to CSXT. Specific sections that pertain to this project are: Special Provisions for Construction near CSXT Property, Overhead Bridge Criteria, Construction Submission Criteria, and Insurance Requirements for Public Projects.

WSP USA Inc.
30 N. LASALLE STREET
SUITE 4200
CHICAGO, IL 60602
TEL: (312) 782-8150
FAX: (312) 782-1684

USER NAME = USSJ696614	DESIGNED - GM	REVISED -	
	CHECKED - PJL	REVISED -	
PLOT SCALE = 60.000 ' / in.	DRAWN - GM	REVISED -	
PLOT DATE = 11/5/2025	CHECKED - PJL	REVISED -	

STATE OF ILLINOIS
DEPARTMENT OF TRANSPORTATION

CONCEPTUAL STEEL ERECTION PLAN - UNIT 1 WB
STRUCTURE NUMBER 099-8309 WB AND 099-8325 EB

SHEET S-21 OF S-333 SHEETS

F.A.I RTE.	SECTION	COUNTY	TOTAL SHEETS	SHEET NO.
I-80	FAI 80 21 STRUCTURE 2	WILL	1230	602
		CONTRACT NO. 62R23		
		ILLINOIS	FED. AID PROJECT	

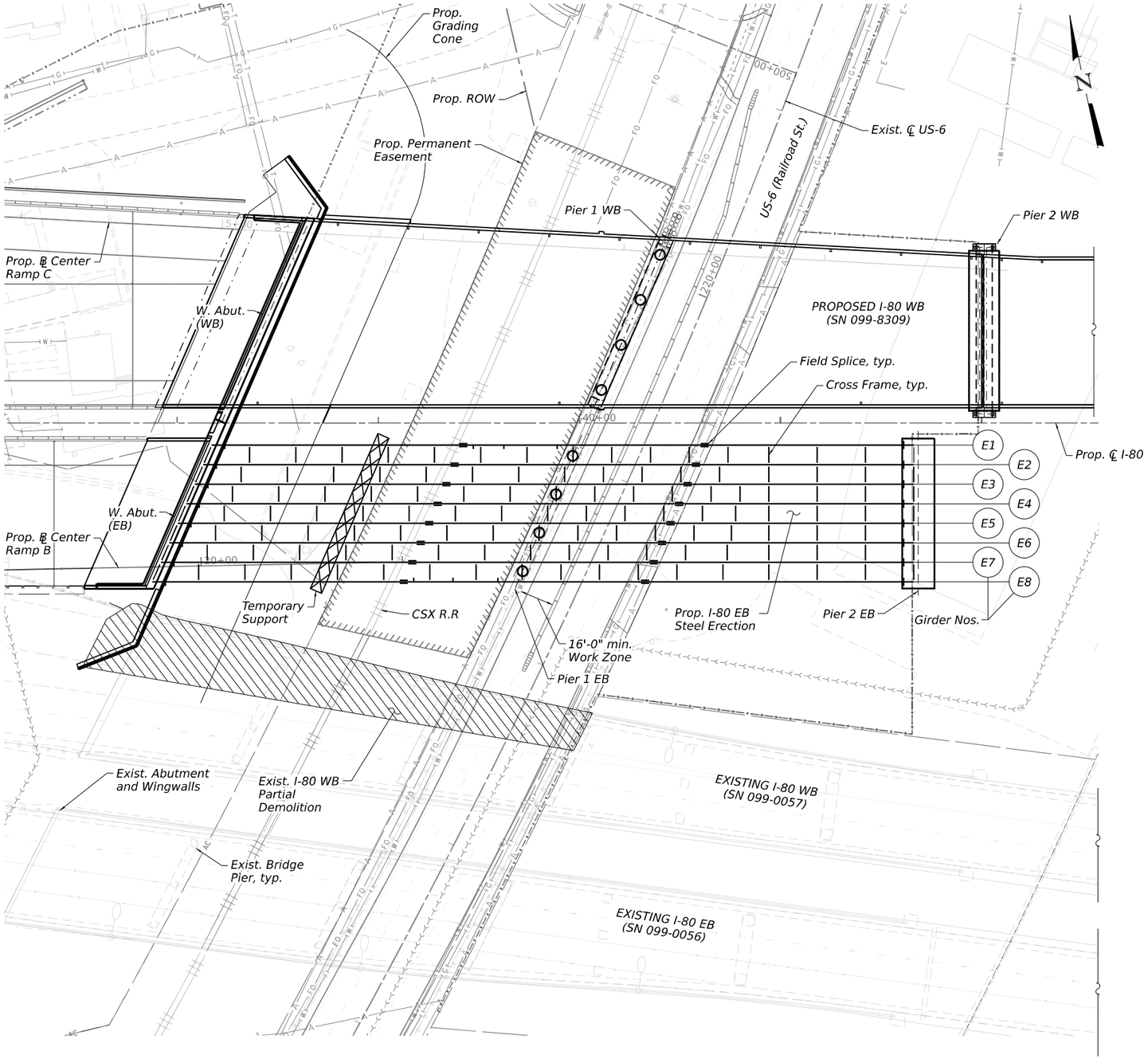

PLAN - CONCEPTUAL ERECTION UNIT 1 EB

LEGEND

- Existing Right-of-Way
- Proposed Permanent Easement
- Temporary Support
- Exist. Bridge Removal
- Temporary Concrete Barrier

NOTES:

1. The erection of the structural steel shall be accomplished by a steel erection contractor or sub-contractor certified as a Certified Structural Steel Erector (ACSE) with Bridge Erection Endorsement by AISC. See special provisions for "Erections of Complex Steel Structures."

2. The erection stages shown on sheets S-21 thru S-23 are presented only as a conceptual erection procedure. All intermediate stages of erection, temporary restraining devices, temporary supports, jacking devices, crane locations, etc. that may be necessary are not shown. The Contractor may submit for approval an alternate procedure, or modify the conceptual procedure provided. The conceptual erection sequence shown is provided for information only and is not all-inclusive, and does not relieve the Contractor of the requirement to submit a steel erection plan prepared and sealed by a Licensed Structural Engineer in Illinois.

3. Refer to the CSX Transportation (CSXT) Public Project Information Manual for additional requirements needed for working on/above/adjacent to CSXT. Specific sections that pertain to this project are: Special Provisions for Construction near CSXT Property, Overhead Bridge Criteria, Construction Submission Criteria, and Insurance Requirements for Public Projects.

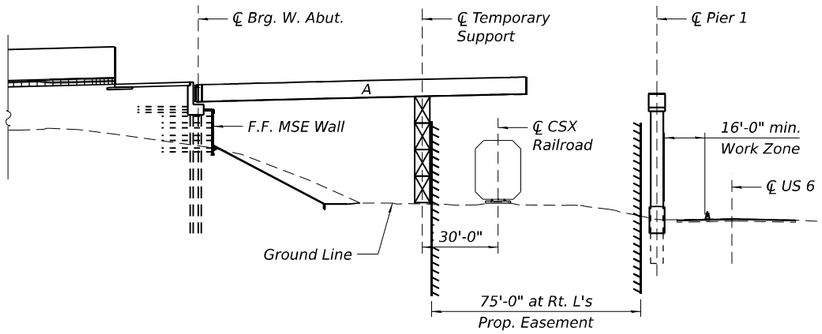

ELEVATION - STAGE I

Note:
Elevations and Stage Notes are given for the WB steel erection. The EB steel erection is similar.

STAGE 1 NOTES:

1. Erect Temporary Support, provide jacking devices as required.
2. Position crane to west of CSX R.O.W. Erect Girder W1 Segment A onto Temporary Support. Hold Girder W1 Segment A with supplemental cranes as required for stability. Do not release cranes.
3. Erect Girder W2 Segment A and cross frames between Girder W1 and W2 before releasing cranes.
4. Erect Girder W3 thru W4 Segment A and cross frames. Proceed to Stage 2.
5. After Girder W1 thru W4 Segment A & B are erected. Repeat Step 4 for Girders W5 thru W10 and cross frames.

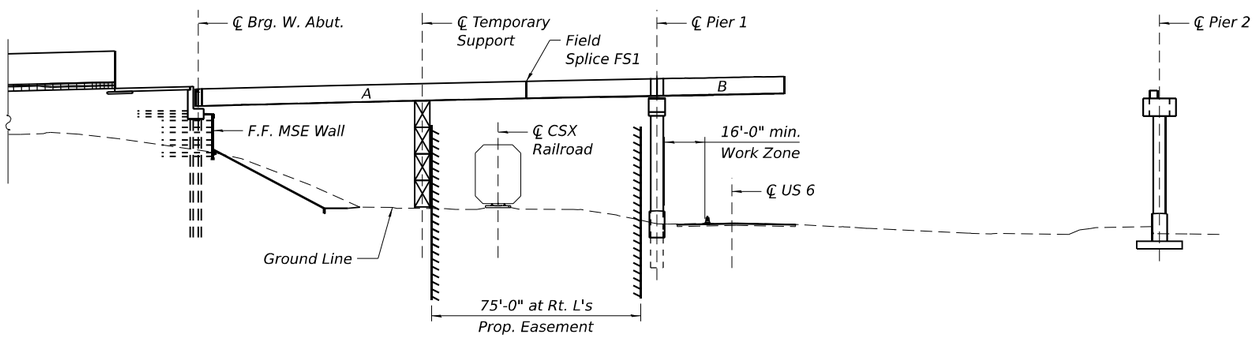

ELEVATION - STAGE 2

STAGE 2 NOTES:

1. Position crane to north of Pier 1 and east of CSX R.O.W. Position holding cranes and man-lifts in CSX R.O.W. to perform field splicing.
2. Erect Girder W1 Segment B and hold with cranes as required for stability. Complete Field Splice FS1 bolting. Do not release cranes.
3. Erect Girder W2 Segment B and cross frames and complete Field Splice FS1 bolting.
4. Erect Girders W3 and W4 Segment B and cross frames. Return to Stage 1 for Girder W5 thru W10 and cross frames erection and completion of Field Splice FS1 bolting.
5. Erect Girders W5 thru W10 Segment B and cross frames and complete Field Splice FS1 bolting.

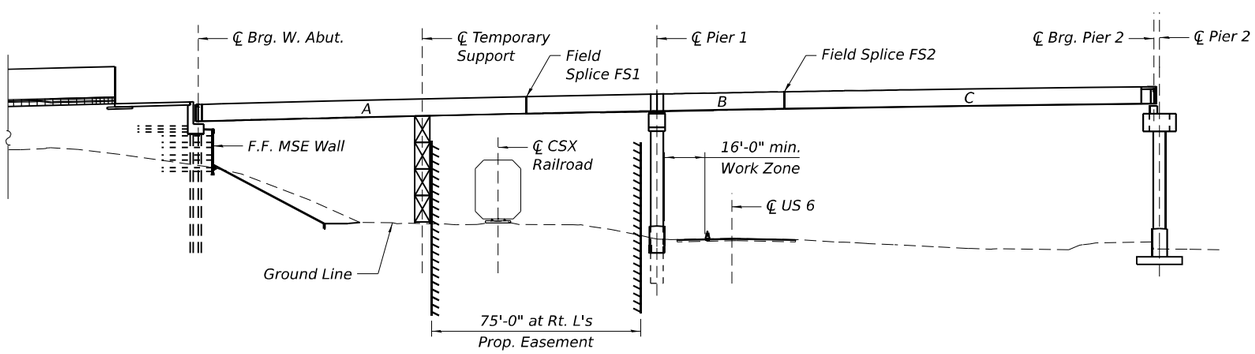

ELEVATION - STAGE 3

STAGE 3 NOTES:

1. Position cranes east of US-6.
2. Erect Girder W1 Segment C and hold with cranes as required for stability. Complete Field Splice FS2 bolting. Do not release cranes.
3. Erect Girder W2 Segment C and cross frames and complete Field Splice FS2 bolting.
4. Erect Girders W3 thru W10 Segment C and cross frames and complete Field Splice FS2 bolting.
5. Remove Temporary Support.

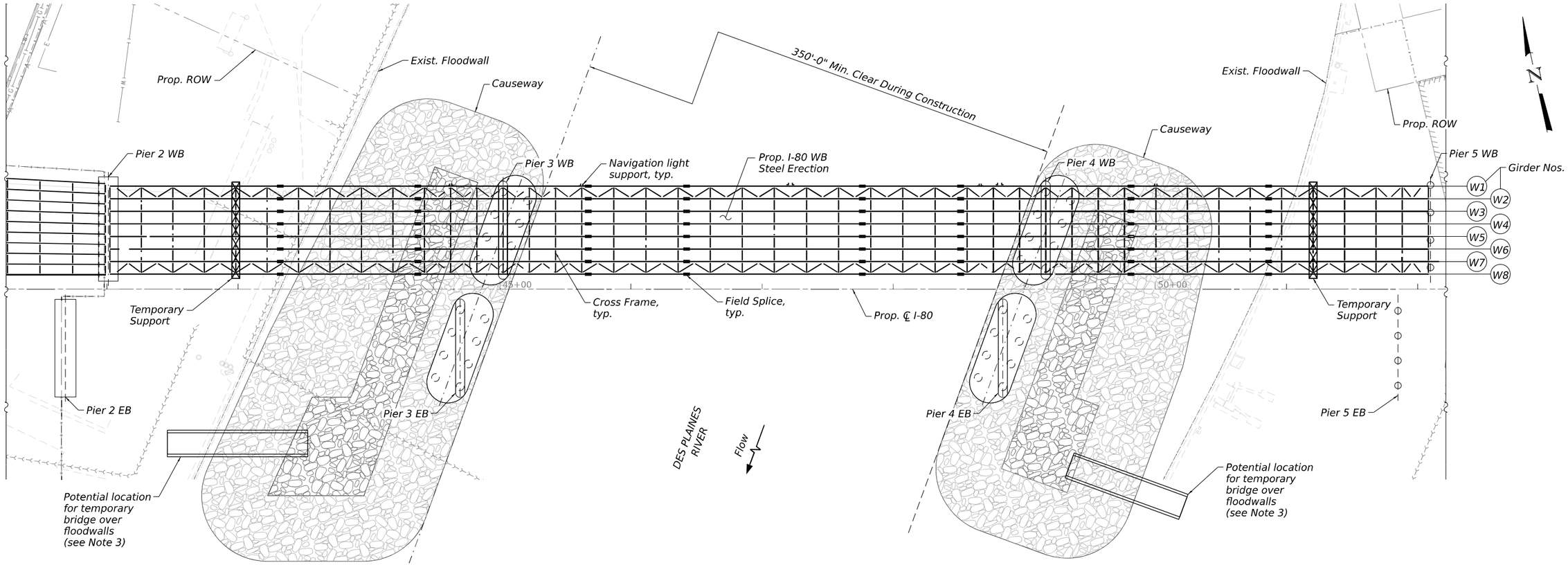

PLAN - CONCEPTUAL ERECTION UNIT 2 WB

NOTES:

1. The erection of the structural steel shall be accomplished by a steel erection contractor or sub-contractor certified as a Certified Structural Steel Erector (ACSE) with Bridge Erection Endorsement by AISC. See special provisions for "Erections of Complex Steel Structures."

2. The erection stages shown on sheets S-24 thru S-28 are presented only as a conceptual erection procedure. All intermediate stages of erection, temporary restraining devices, temporary supports, jacking devices, crane locations, etc. that may be necessary are not shown. The Contractor may submit for approval an alternate procedure, or modify the conceptual procedure provided. The conceptual erection sequence shown is provided for information only and is not all-inclusive, and does not relieve the Contractor of the requirement to submit a steel erection plan prepared and sealed by a Licensed Structural Engineer in Illinois.

3. See Roadway Plans for additional information regarding the temporary causeway, temporary bridges, floodwalls, permits and Temporary Facilities Installed by Contractor Special Provision.

LEGEND

- Existing Right-of-Way
- Proposed Permanent Easement
- Temporary Support

WSP USA Inc.
30 N. LASALLE STREET
SUITE 4200
CHICAGO, IL 60602
TEL: (312) 782-8150
FAX: (312) 782-1684

USER NAME = USSJ696614	DESIGNED -	REVISED -
	CHECKED -	REVISED -
PLOT SCALE = 80.000 ' / in.	DRAWN -	REVISED -
PLOT DATE = 11/5/2025	CHECKED -	REVISED -

STATE OF ILLINOIS
DEPARTMENT OF TRANSPORTATION

CONCEPTUAL STEEL ERECTION PLAN - UNIT 2 WB
STRUCTURE NUMBER 099-8309 WB AND 099-8325 EB

SHEET S-24 OF S-333 SHEETS

F.A.I RTE.	SECTION	COUNTY	TOTAL SHEETS	SHEET NO.
I-80	FAI 80 21 STRUCTURE 2	WILL	1230	605
		CONTRACT NO. 62R23		
	ILLINOIS	FED. AID PROJECT		

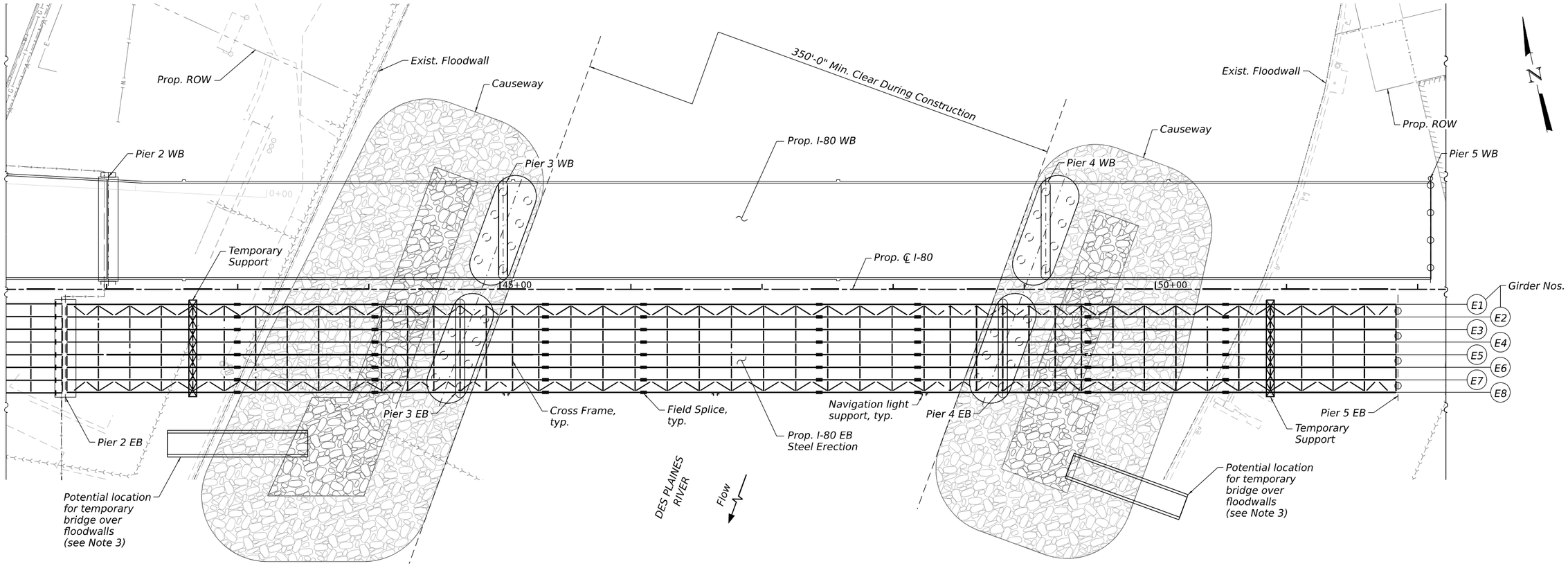

PLAN - CONCEPTUAL ERECTION UNIT 2 EB

NOTES:

1. The erection of the structural steel shall be accomplished by a steel erection contractor or sub-contractor certified as a Certified Structural Steel Erector (ACSE) with Bridge Erection Endorsement by AISC. See special provisions for "Erections of Complex Steel Structures."

2. The erection stages shown on sheets S-24 thru S-28 are presented only as a conceptual erection procedure. All intermediate stages of erection, temporary restraining devices, temporary supports, jacking devices, crane locations, etc. that may be necessary are not shown. The Contractor may submit for approval an alternate procedure, or modify the conceptual procedure provided. The conceptual erection sequence shown is provided for information only and is not all-inclusive, and does not relieve the Contractor of the requirement to submit a steel erection plan prepared and sealed by a Licensed Structural Engineer in Illinois.

3. See Roadway Plans for additional information regarding the temporary causeway, temporary bridges, floodwalls, permits and Temporary Facilities Installed by Contractor Special Provision.

LEGEND

- Existing Right-of-Way
- Proposed Permanent Easement
- Temporary Support

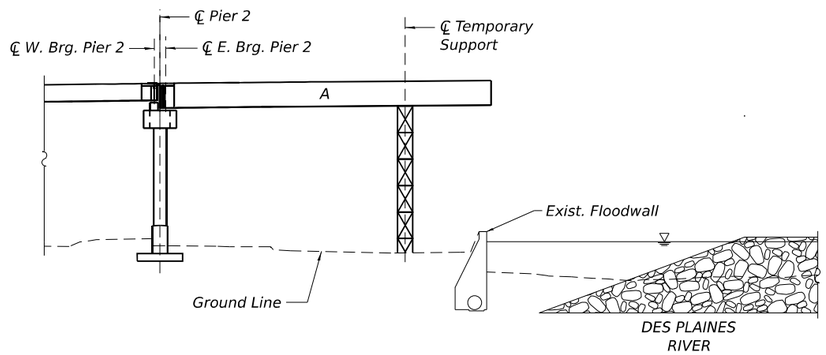

ELEVATION - STAGE I

Note:
Elevations and Stage Notes are given for the WB steel erection. The EB steel erection is similar.

STAGE 1 NOTES:

1. Erect Temporary Support, provide jacking devices as required.
2. Position crane east of US-6 and to the west of existing floodwall. Erect Girder W1 Segment A onto Temporary Support. Hold Girder W1 Segment A with supplemental cranes as required for stability. Do not release cranes.
3. Erect Girder W2 Segment A and cross frames between Girder W1 and W2 before releasing cranes.
4. Erect Girder W3 thru W8 Segment A and cross frames. Proceed to Stage 2.

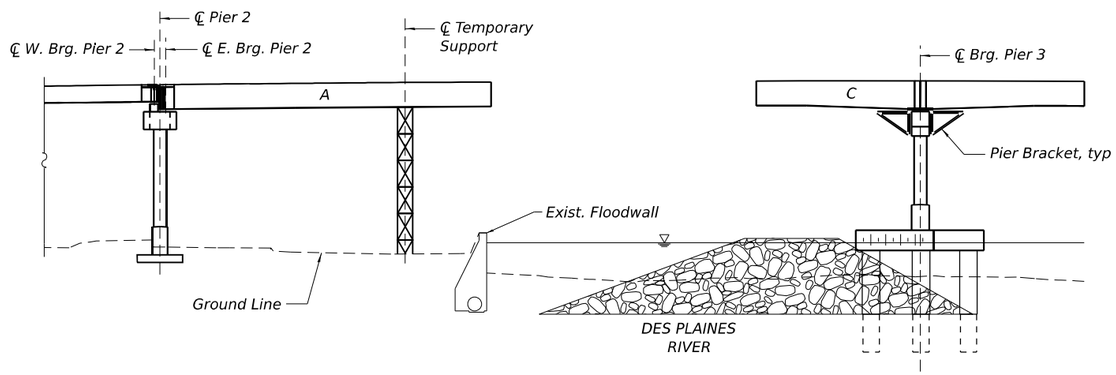

ELEVATION - STAGE 2

STAGE 2 NOTES:

1. Position crane to west of Pier 3 on the temporary causeway.
2. Install Pier Brackets and secondary stability components and/or erect temporary supports.
3. Erect Girder W1 Segment C onto Pier 3.
4. Erect Girders W2 thru W8 Segment C and cross frames onto Pier 3.

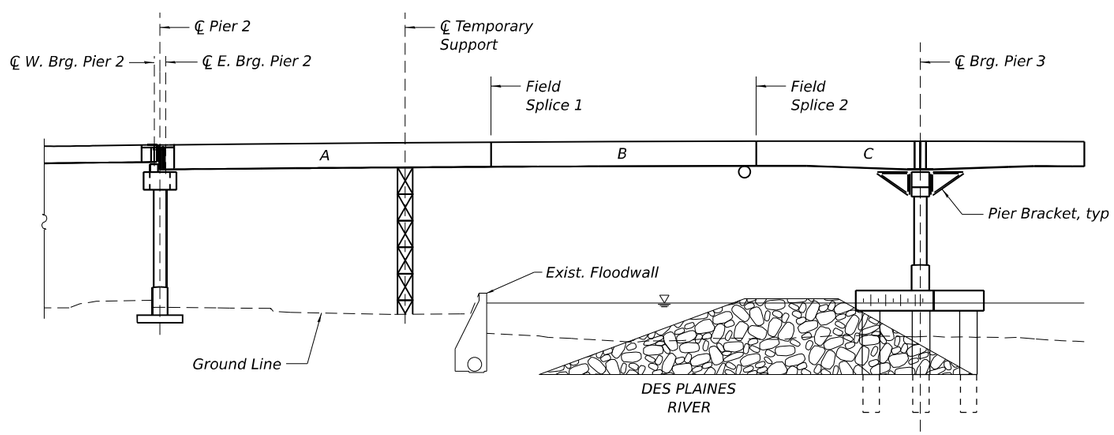

ELEVATION - STAGE 3

STAGE 3 NOTES:

1. Position cranes east of US-6 and on temporary causeway. Position man-lifts and holding cranes as needed for stability and field splicing.
2. Erect Girder W1 Segment B and hold with cranes as required for stability. Complete Field Splice 1 & 2 bolting. Do not release cranes.
3. Erect Girder W2 Segment B and cross frames and complete Field Splice 1 & 2 bolting.
4. Erect Girders W3 thru W8 Segment B and cross frames and complete Field Splice 1 & 2 bolting.
5. Remove Temporary Support.

STAGE 4 NOTES:

1. Erect Temporary Support 2, provide jacking devices as required.
2. Position crane west of River St. and to the east of existing floodwall. Erect Girder W1 Segment I onto Temporary Support 2. Hold Girder W1 Segment A with supplemental cranes as required for stability. Do not release cranes.
3. Erect Girder W2 Segment I and cross frames between Girder W1 and W2 before releasing cranes.
4. Erect Girder W3 thru W8 Segment I and cross frames. Proceed to Stage 5.

Note:
Elevations and Stage Notes are given for the WB steel erection. The EB steel erection is similar.

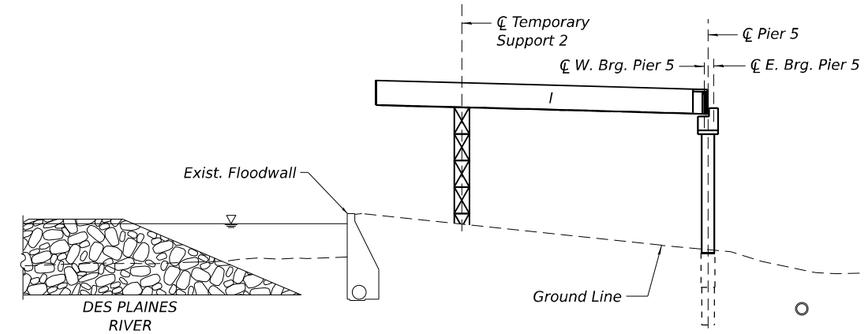

ELEVATION - STAGE 4

STAGE 5 NOTES:

1. Position crane to east of Pier 4 on the temporary causeway.
2. Install Pier Brackets and secondary stability components and/or erect temporary supports.
3. Erect Girder W1 Segment G onto Pier E.
4. Erect Girders W2 thru W8 Segment G and cross frames onto Pier 4.

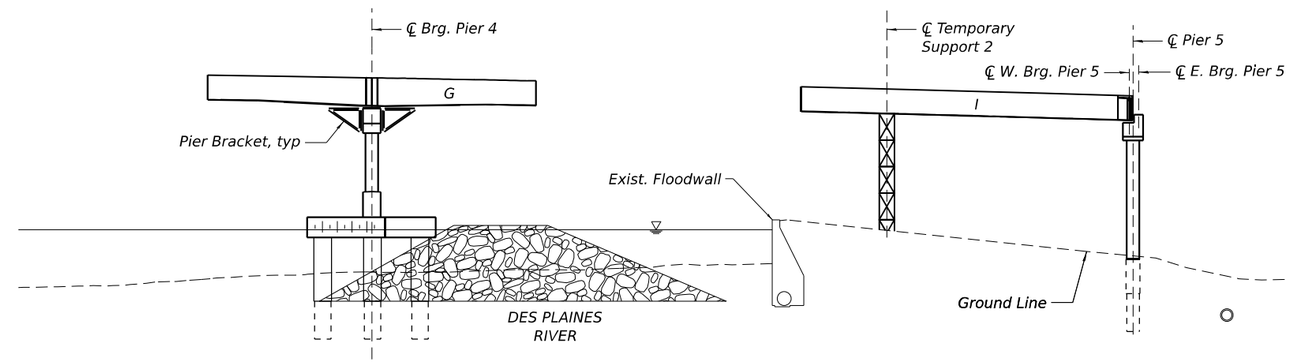

ELEVATION - STAGE 5

STAGE 6 NOTES:

1. Position cranes west of River St. and on temporary causeway. Position man-lifts and holding cranes as needed for stability and field splicing.
2. Erect Girder W1 Segment H and hold with cranes as required for stability. Complete Field Splice FS7 & FS8 bolting. Do not release cranes.
3. Erect Girder W2 Segment H and cross frames and complete Field Splice FS7 & FS8 bolting.
4. Erect Girders W3 thru W8 Segment H and cross frames and complete Field Splice FS7 & FS8 bolting.

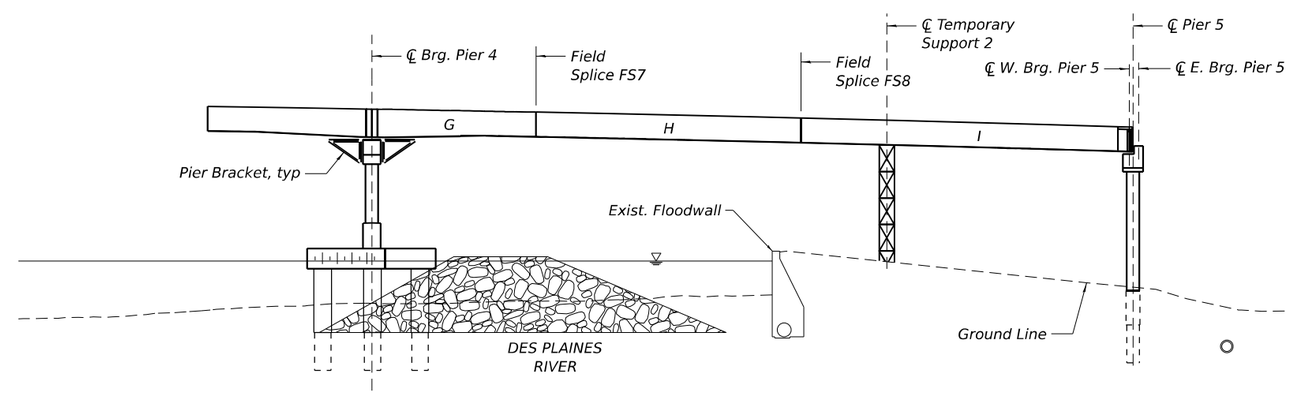

ELEVATION - STAGE 6

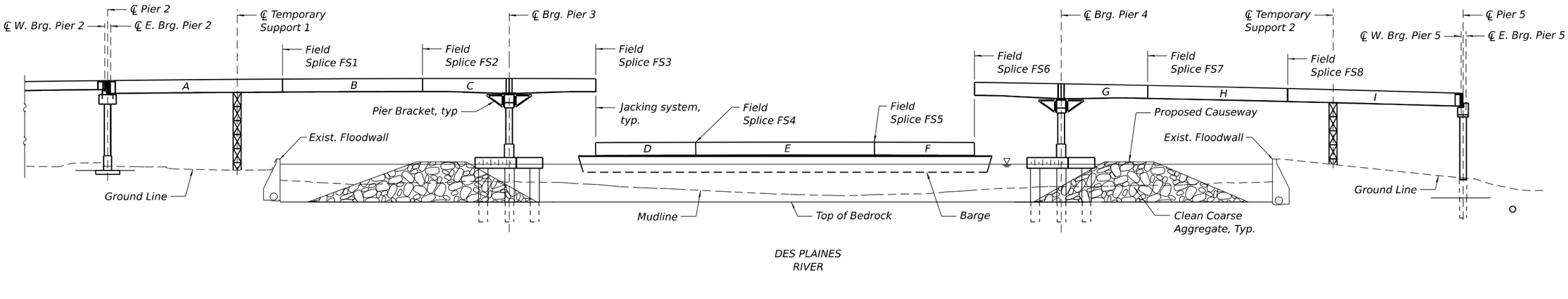

ELEVATION - STAGE 7

Note:
Elevation and Stage Notes are given for the WB steel erection. The EB steel erection is similar.

STAGE 7 NOTES:

1. Using a single barge, or multiple barges connected together, construct a floating platform.
2. On the floating platform, assemble Girder W1 thru W4 Segments D, E and G girders, cross frames, top lateral bracing, and complete Field Splice FS4 & FS5. All connections should be made completely.
3. Lift the Girder W1 thru W4 Segments E, F, and G assembly into place with strand jack systems placed near the ends of the previously erected segments. Use jacking devices to adjust longitudinally and vertically as necessary, to complete Field Splice FS3 & FS6. Fully complete Field Splice FS3 & FS6 for all girder lines before releasing lifted assembly from strand jack systems.
4. Repeat Step 3 for Girder W5 thru W8. Erect cross frames between previously erected Girder W4 and newly erected Girder W5.
5. Remove Temporary Supports 1 and 2 and Pier Brackets.

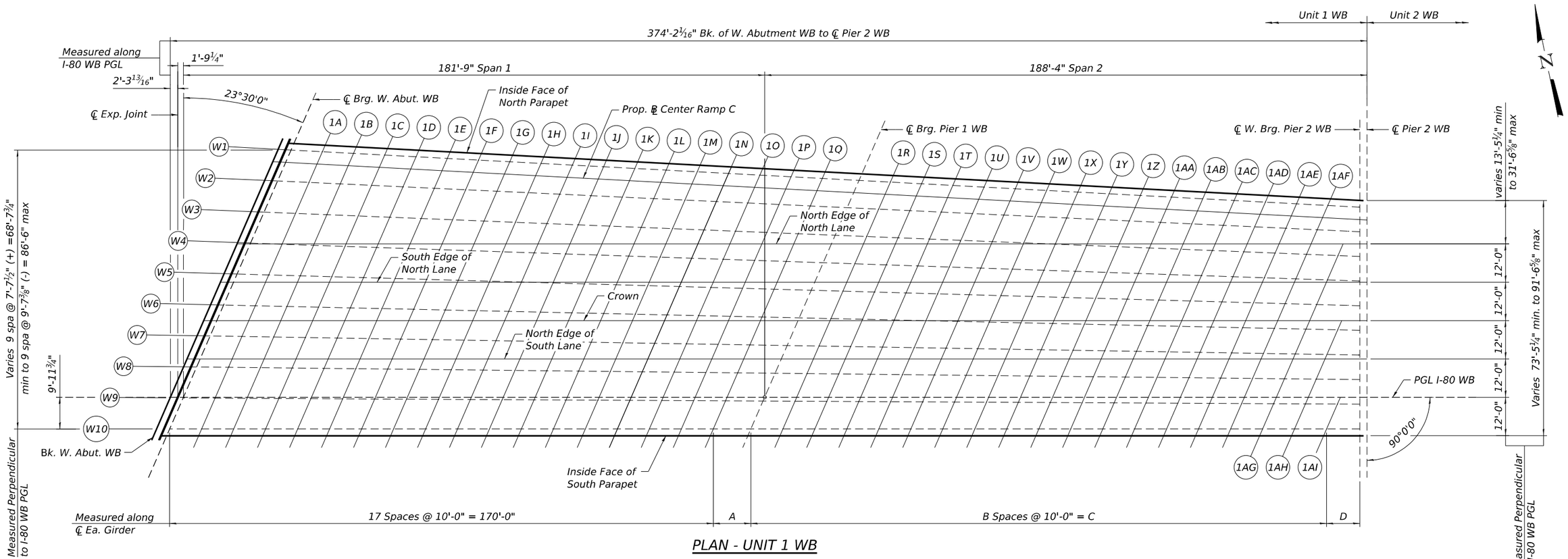

PLAN - UNIT 1 WB

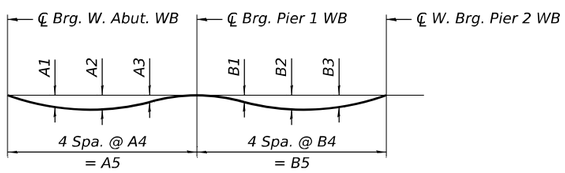

DEAD LOAD DEFLECTION DIAGRAM

(Includes weight of concrete only.)

Note:
The above deflections are not to be used in the field if the engineer is working from the grade elevations adjusted for dead load deflections and grinding as shown on sheets S-30 to S-35.

Girder	DEAD LOAD DEFLECTIONS									
	Span 1					Span 2				
	A1	A2	A3	A4	A5	B1	B2	B3	B4	B5
W1	2 1/2"	3"	1 1/2"	±44'-5 5/8"	177'-10 9/16"	1/8"	3/4"	7/8"	±39'-2 3/8"	156'-9 5/8"
W2	2 5/8"	3 1/8"	1 1/2"	±44'-7"	178'-3 3/4"	1/8"	7/8"	7/8"	±40'-1 3/8"	160'-5 3/4"
W3	2 1/2"	3"	1 3/8"	44'-8 1/4"	178'-9"	1/8"	1"	1"	41'-0 1/2"	164'-2"
W4	2 3/8"	2 7/8"	1 1/4"	±44'-9 1/2"	179'-2 3/16"	1/4"	1 1/8"	1 1/8"	±41'-11 5/8"	167'-10 7/16"
W5	2 1/4"	2 5/8"	1 1/4"	±44'-10 7/8"	179'-7 3/8"	3/8"	1 1/4"	1 1/4"	±42-10 3/4"	171'-7 1/16"
W6	2 1/4"	2 5/8"	1 1/8"	±45'-0 1/8"	180'-0 9/16"	1/2"	1 1/2"	1 3/8"	±43'-10"	175'-3 7/8"
W7	2 1/4"	2 5/8"	1 1/8"	±45'-1 3/8"	180'-5 11/16"	5/8"	1 3/4"	1 5/8"	±44'-9 1/4"	179'-0 13/16"
W8	2 3/8"	2 3/4"	1 1/8"	±45'-2 3/4"	180-10 13/16"	3/4"	2 1/8"	2"	±45'-8 1/2"	182'-9 15/16"
W9	2 3/8"	2 3/4"	1 1/8"	±45'-4"	181'-3 15/16"	1"	2 5/8"	2 1/4"	±46'-7 3/4"	186'-7 1/4"
W10	2 1/4"	2 1/2"	1"	45'-5 1/4"	181'-9"	1 1/4"	3"	2 5/8"	±47'-7 1/8"	190'-4 11/16"

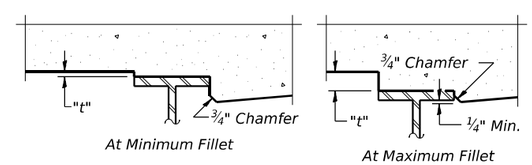

To determine "t": After all structural steel has been erected, elevations of the top flanges of the beams shall be taken at intervals shown. These elevations subtracted from the "Theoretical Grade Elevations Adjusted for Dead Load Deflection and Grinding" shown on sheets S-30 to S-35, minus the initial slab thickness prior to grinding, equals the fillet heights "t" above top flange of beams.
The slab is to be ground after curing to achieve smoothness, but the slab is not to be ground to elevations below the "Theoretical Grade Elevations" shown on sheets S-30 to S-35. For grinding the deck, see Special Provisions.

FILLET HEIGHTS

TOP OF SLAB DIMENSIONS TABLE - UNIT 1 WB

Girder	A	B	C	D
W1	7'-10 9/16"	15	150'-0"	6'-9 5/8"
W2	8'-3 3/4"	15	150'-0"	10'-5 3/4"
W3	8'-9"	15	150'-0"	14'-2"
W4	9'-2 3/16"	16	160'-0"	7'-10 7/16"
W5	9'-7 3/8"	16	160'-0"	11'-7 1/16"
W6	10'-0 9/16"	17	170'-0"	5'-3 7/8"
W7	10'-5 11/16"	17	170'-0"	9'-0 13/16"
W8	10'-10 13/16"	17	170'-0"	12'-9 15/16"
W9	11'-3 15/16"	18	180'-0"	6'-7 1/4"
W10	11'-9"	18	180'-0"	10'-4 11/16"

NOTES:

1. *The dead load deflections shown in the diagram and used for fillet height determination are based on the Deck Pouring Sequence shown on sheet S-109.*
2. *If the Contractor elects to use a different pour placement/hardening schedule, then the deflections and fillet heights shall be re-calculated.*
3. *The cost of re-calculating deflections and adjusting fillet heights shall be included in the cost of Concrete Superstructure.*
4. *Up to 1/4 inch to be ground off the bridge deck and the bridge approach slabs. The Profile Grade shows the final grade after grinding.*

INSIDE FACE OF NORTH PARAPET - WB

Location	Station	Offset	Theoretical Grade Elevations	Theoretical Grade Elevations Adjusted for Dead Load Deflection and Grinding
BK. W. ABUT. WB	38+61.38	-79.55	596.88	596.90
℄ EXP. JT.	38+63.12	-79.46	596.92	596.94
℄ BRG. W. ABUT. WB	38+65.39	-79.34	596.96	596.98
1A	38+75.37	-78.80	597.15	597.22
1B	38+85.36	-78.27	597.33	597.46
1C	38+95.34	-77.74	597.51	597.69
1D	39+05.33	-77.21	597.68	597.90
1E	39+15.32	-76.68	597.86	598.11
1F	39+25.30	-76.14	598.02	598.29
1G	39+35.29	-75.61	598.20	598.48
1H	39+45.27	-75.08	598.38	598.66
1I	39+55.26	-74.55	598.56	598.85
1J	39+65.24	-74.02	598.77	599.01
1K	39+75.23	-73.48	598.96	599.19
1L	39+85.22	-72.95	599.16	599.35
1M	39+95.20	-72.42	599.35	599.50
1N	40+05.19	-71.89	599.54	599.65
1O	40+15.17	-71.36	599.72	599.81
1P	40+25.16	-70.82	599.90	599.95
1Q	40+35.14	-70.29	600.07	600.11
℄ BRG. PIER 1 WB	40+43.23	-69.86	600.21	600.23
1R	40+53.21	-69.33	600.38	600.39
1S	40+63.20	-68.80	600.54	600.55
1T	40+73.18	-68.27	600.70	600.72
1U	40+83.17	-67.73	600.86	600.88
1V	40+93.16	-67.20	601.01	601.05
1W	41+03.14	-66.67	601.15	601.21
1X	41+13.13	-66.14	601.30	601.37
1Y	41+23.11	-65.60	601.44	601.52
1Z	41+33.10	-65.07	601.57	601.66
1AA	41+43.08	-64.54	601.70	601.80
1AB	41+53.07	-64.01	601.83	601.93
1AC	41+63.06	-63.48	601.95	602.04
1AD	41+73.04	-62.94	602.07	602.15
1AE	41+83.03	-62.41	602.19	602.25
1AF	41+93.01	-61.88	602.30	602.34
1AG	-	-	-	-
1AH	-	-	-	-
1AI	-	-	-	-
℄ W. BRG. PIER 2 WB	41+98.96	-61.56	602.37	602.39
℄ PIER 2 WB	42+01.21	-61.44	602.39	602.41

GIRDER W1

Location	Station	Offset	Theoretical Grade Elevations	Theoretical Grade Elevations Adjusted for Dead Load Deflection and Grinding
BK. W. ABUT. WB	38+60.57	-77.54	596.91	596.93
℄ EXP. JT.	38+62.31	-77.45	596.94	596.96
℄ BRG. W. ABUT. WB	38+64.57	-77.33	596.98	597.01
1A	38+74.56	-76.79	597.17	597.25
1B	38+84.55	-76.26	597.36	597.49
1C	38+94.53	-75.73	597.54	597.71
1D	39+04.52	-75.20	597.71	597.93
1E	39+14.50	-74.66	597.88	598.13
1F	39+24.49	-74.13	598.05	598.32
1G	39+34.48	-73.60	598.22	598.50
1H	39+44.46	-73.06	598.41	598.69
1I	39+54.45	-72.53	598.59	598.87
1J	39+64.43	-72.00	598.79	599.04
1K	39+74.42	-71.46	598.99	599.21
1L	39+84.40	-70.93	599.18	599.37
1M	39+94.39	-70.40	599.37	599.53
1N	40+04.38	-69.86	599.56	599.68
1O	40+14.36	-69.33	599.74	599.83
1P	40+24.35	-68.80	599.92	599.98
1Q	40+34.33	-68.27	600.10	600.14
℄ BRG. PIER 1 WB	40+42.37	-67.84	600.24	600.26
1R	40+52.36	-67.30	600.40	600.42
1S	40+62.35	-66.77	600.57	600.58
1T	40+72.33	-66.24	600.73	600.74
1U	40+82.32	-65.70	600.88	600.91
1V	40+92.30	-65.17	601.04	601.08
1W	41+02.29	-64.64	601.18	601.24
1X	41+12.28	-64.10	601.33	601.40
1Y	41+22.26	-63.57	601.47	601.55
1Z	41+32.25	-63.04	601.60	601.70
1AA	41+42.23	-62.51	601.73	601.83
1AB	41+52.22	-61.97	601.86	601.96
1AC	41+62.20	-61.44	601.99	602.07
1AD	41+72.19	-60.91	602.11	602.18
1AE	41+82.18	-60.37	602.22	602.28
1AF	41+92.16	-59.84	602.33	602.37
1AG	-	-	-	-
1AH	-	-	-	-
1AI	-	-	-	-
℄ W. BRG. PIER 2 WB	41+98.96	-59.48	602.41	602.43
℄ PIER 2 WB	42+01.21	-59.36	602.43	602.45

PROP. BL CENTER RAMP C

Location	Station	Offset	Theoretical Grade Elevations	Theoretical Grade Elevations Adjusted for Dead Load Deflection and Grinding
BK. W. ABUT. WB	38+59.01	-73.71	596.96	596.98
℄ EXP. JT.	38+60.75	-73.61	596.99	597.01
℄ BRG. W. ABUT. WB	38+63.01	-73.49	597.03	597.05
1A	38+73.00	-72.96	597.22	597.30
1B	38+82.98	-72.43	597.41	597.54
1C	38+92.97	-71.90	597.59	597.76
1D	39+02.96	-71.37	597.76	597.98
1E	39+12.94	-70.84	597.94	598.18
1F	39+22.93	-70.31	598.10	598.37
1G	39+32.91	-69.78	598.27	598.55
1H	39+42.90	-69.25	598.46	598.73
1I	39+52.89	-68.72	598.64	598.92
1J	39+62.87	-68.19	598.84	599.08
1K	39+72.86	-67.66	599.04	599.26
1L	39+82.84	-67.14	599.23	599.42
1M	39+92.83	-66.61	599.42	599.58
1N	40+02.81	-66.08	599.61	599.73
1O	40+12.80	-65.55	599.79	599.88
1P	40+22.79	-65.02	599.97	600.03
1Q	40+32.77	-64.49	600.15	600.19
℄ BRG. PIER 1 WB	40+40.72	-64.06	600.29	600.31
1R	40+50.70	-63.53	600.45	600.47
1S	40+60.69	-63.00	600.62	600.63
1T	40+70.67	-62.47	600.78	600.79
1U	40+80.66	-61.94	600.93	600.96
1V	40+90.64	-61.41	601.09	601.13
1W	41+00.63	-60.88	601.24	601.29
1X	41+10.62	-60.35	601.38	601.45
1Y	41+20.60	-59.82	601.52	601.60
1Z	41+30.59	-59.29	601.66	601.75
1AA	41+40.57	-58.76	601.79	601.89
1AB	41+50.56	-58.23	601.92	602.01
1AC	41+60.55	-57.71	602.04	602.13
1AD	41+70.53	-57.18	602.16	602.24
1AE	41+80.52	-56.65	602.28	602.34
1AF	41+90.50	-56.12	602.39	602.43
1AG	-	-	-	-
1AH	-	-	-	-
1AI	-	-	-	-
℄ W. BRG. PIER 2 WB	41+98.96	-55.67	602.48	602.50
℄ PIER 2 WB	42+01.21	-55.55	602.51	602.53

NOTES:

1. All Elevations and Offsets are in feet.
2. Offsets are measured with respect to the I-80 WB PGL. Negative offsets are left and positive are right of the PGL.

GIRDER W2

Location	Station	Offset	Theoretical Grade Elevations	Theoretical Grade Elevations Adjusted for Dead Load Deflection and Grinding
BK. W. ABUT. WB	38+56.53	-67.82	597.03	597.05
℄ EXP. JT.	38+58.27	-67.74	597.06	597.08
℄ BRG. W. ABUT. WB	38+60.54	-67.63	597.11	597.13
1A	38+70.53	-67.17	597.29	597.37
1B	38+80.52	-66.70	597.48	597.61
1C	38+90.51	-66.23	597.66	597.84
1D	39+00.50	-65.76	597.83	598.06
1E	39+10.48	-65.29	598.01	598.26
1F	39+20.47	-64.82	598.17	598.45
1G	39+30.46	-64.36	598.34	598.63
1H	39+40.45	-63.89	598.52	598.81
1I	39+50.44	-63.42	598.70	598.99
1J	39+60.43	-62.95	598.89	599.15
1K	39+70.42	-62.48	599.09	599.32
1L	39+80.41	-62.01	599.29	599.48
1M	39+90.40	-61.55	599.48	599.64
1N	40+00.39	-61.08	599.67	599.79
1O	40+10.38	-60.61	599.85	599.94
1P	40+20.36	-60.14	600.03	600.09
1Q	40+30.35	-59.67	600.21	600.24
℄ BRG. PIER 1 WB	40+38.66	-59.28	600.35	600.37
1R	40+48.65	-58.81	600.52	600.53
1S	40+58.64	-58.35	600.68	600.69
1T	40+68.63	-57.88	600.84	600.86
1U	40+78.62	-57.41	601.00	601.03
1V	40+88.61	-56.94	601.15	601.19
1W	40+98.60	-56.47	601.30	601.36
1X	41+08.58	-56.00	601.44	601.52
1Y	41+18.57	-55.54	601.58	601.67
1Z	41+28.56	-55.07	601.72	601.82
1AA	41+38.55	-54.60	601.85	601.95
1AB	41+48.54	-54.13	601.98	602.08
1AC	41+58.53	-53.66	602.10	602.20
1AD	41+68.52	-53.19	602.22	602.31
1AE	41+78.51	-52.73	602.34	602.40
1AF	41+88.50	-52.26	602.45	602.49
1AG	-	-	-	-
1AH	-	-	-	-
1AI	-	-	-	-
℄ W. BRG. PIER 2 WB	41+98.96	-51.77	602.56	602.58
℄ PIER 2 WB	42+01.21	-51.66	602.59	602.61

GIRDER W3

Location	Station	Offset	Theoretical Grade Elevations	Theoretical Grade Elevations Adjusted for Dead Load Deflection and Grinding
BK. W. ABUT. WB	38+52.31	-58.10	597.15	597.17
℄ EXP. JT.	38+54.05	-58.03	597.18	597.20
℄ BRG. W. ABUT. WB	38+56.33	-57.94	597.22	597.24
1A	38+66.32	-57.53	597.41	597.49
1B	38+76.31	-57.13	597.60	597.72
1C	38+86.30	-56.73	597.78	597.95
1D	38+96.29	-56.32	597.95	598.17
1E	39+06.29	-55.92	598.13	598.37
1F	39+16.28	-55.51	598.29	598.56
1G	39+26.27	-55.11	598.46	598.74
1H	39+36.26	-54.70	598.63	598.90
1I	39+46.25	-54.30	598.81	599.09
1J	39+56.25	-53.89	598.99	599.24
1K	39+66.24	-53.49	599.19	599.41
1L	39+76.23	-53.08	599.39	599.58
1M	39+86.22	-52.68	599.58	599.73
1N	39+96.21	-52.27	599.77	599.89
1O	40+06.20	-51.87	599.95	600.04
1P	40+16.20	-51.46	600.13	600.19
1Q	40+26.19	-51.06	600.31	600.35
℄ BRG. PIER 1 WB	40+34.93	-50.70	600.46	600.48
1R	40+44.92	-50.30	600.63	600.64
1S	40+54.91	-49.89	600.79	600.81
1T	40+64.91	-49.49	600.95	600.97
1U	40+74.90	-49.08	601.11	601.14
1V	40+84.89	-48.68	601.26	601.31
1W	40+94.88	-48.27	601.41	601.48
1X	41+04.87	-47.87	601.55	601.64
1Y	41+14.87	-47.46	601.69	601.79
1Z	41+24.86	-47.06	601.83	601.94
1AA	41+34.85	-46.65	601.96	602.08
1AB	41+44.84	-46.25	602.09	602.20
1AC	41+54.83	-45.84	602.21	602.32
1AD	41+64.82	-45.44	602.34	602.43
1AE	41+74.82	-45.04	602.45	602.53
1AF	41+84.81	-44.63	602.56	602.62
1AG	-	-	-	-
1AH	-	-	-	-
1AI	-	-	-	-
℄ W. BRG. PIER 2 WB	41+98.96	-44.06	602.72	602.74
℄ PIER 2 WB	42+01.21	-43.97	602.74	602.76

NORTH EDGE OF NORTH LANE - WB

Location	Station	Offset	Theoretical Grade Elevations	Theoretical Grade Elevations Adjusted for Dead Load Deflection and Grinding
BK. W. ABUT. WB	38+47.91	-48.00	597.27	597.29
℄ EXP. JT.	38+50.23	-48.00	597.31	597.33
℄ BRG. W. ABUT. WB	38+52.00	-48.00	597.34	597.36
1A	38+62.00	-48.00	597.52	597.60
1B	38+72.00	-48.00	597.70	597.83
1C	38+82.00	-48.00	597.88	598.05
1D	38+92.00	-48.00	598.05	598.25
1E	39+02.00	-48.00	598.21	598.45
1F	39+12.00	-48.00	598.38	598.63
1G	39+22.00	-48.00	598.54	598.80
1H	39+32.00	-48.00	598.69	598.95
1I	39+42.00	-48.00	598.87	599.13
1J	39+52.00	-48.00	599.04	599.27
1K	39+62.00	-48.00	599.22	599.43
1L	39+72.00	-48.00	599.41	599.59
1M	39+82.00	-48.00	599.60	599.74
1N	39+92.00	-48.00	599.78	599.89
1O	40+02.00	-48.00	599.96	600.04
1P	40+12.00	-48.00	600.13	600.19
1Q	40+22.00	-48.00	600.30	600.34
℄ BRG. PIER 1 WB	40+33.75	-48.00	600.49	600.52
1R	40+43.75	-48.00	600.65	600.67
1S	40+53.75	-48.00	600.81	600.83
1T	40+63.75	-48.00	600.96	600.99
1U	40+73.75	-48.00	601.11	601.15
1V	40+83.75	-48.00	601.26	601.31
1W	40+93.75	-48.00	601.40	601.47
1X	41+03.75	-48.00	601.54	601.63
1Y	41+13.75	-48.00	601.67	601.77
1Z	41+23.75	-48.00	601.80	601.91
1AA	41+33.75	-48.00	601.92	602.05
1AB	41+43.75	-48.00	602.04	602.17
1AC	41+53.75	-48.00	602.16	602.28
1AD	41+63.75	-48.00	602.27	602.38
1AE	41+73.75	-48.00	602.38	602.47
1AF	41+83.75	-48.00	602.49	602.55
1AG	41+93.75	-48.00	602.59	602.63
1AH	-	-	-	-
1AI	-	-	-	-
℄ W. BRG. PIER 2 WB	41+98.96	-48.00	602.64	602.66
℄ PIER 2 WB	42+01.21	-48.00	602.66	602.68

NOTES:

1. All Elevations and Offsets are in feet.
2. Offsets are measured with respect to the I-80 WB PGL. Negative offsets are left and positive are right of the PGL.

GIRDER W4

Location	Station	Offset	Theoretical Grade Elevations	Theoretical Grade Elevations Adjusted for Dead Load Deflection and Grinding
BK. W. ABUT. WB	38+48.08	-48.38	597.26	597.28
℄ EXP. JT.	38+49.83	-48.32	597.30	597.32
℄ BRG. W. ABUT. WB	38+52.11	-48.25	597.34	597.36
1A	38+62.11	-47.90	597.53	597.60
1B	38+72.10	-47.56	597.71	597.83
1C	38+82.09	-47.22	597.88	598.05
1D	38+92.09	-46.87	598.06	598.26
1E	39+02.08	-46.53	598.23	598.46
1F	39+12.08	-46.19	598.40	598.65
1G	39+22.07	-45.85	598.56	598.83
1H	39+32.07	-45.50	598.73	598.99
1I	39+42.06	-45.16	598.92	599.18
1J	39+52.05	-44.82	599.10	599.33
1K	39+62.05	-44.47	599.29	599.50
1L	39+72.04	-44.13	599.49	599.67
1M	39+82.04	-43.79	599.68	599.83
1N	39+92.03	-43.45	599.87	599.98
1O	40+02.02	-43.10	600.06	600.14
1P	40+12.02	-42.76	600.24	600.29
1Q	40+22.01	-42.42	600.41	600.45
℄ BRG. PIER 1 WB	40+31.19	-42.10	600.57	600.59
1R	40+41.19	-41.76	600.74	600.76
1S	40+51.18	-41.42	600.90	600.92
1T	40+61.17	-41.07	601.06	601.09
1U	40+71.17	-40.73	601.22	601.26
1V	40+81.16	-40.39	601.37	601.43
1W	40+91.16	-40.04	601.52	601.59
1X	41+01.15	-39.70	601.67	601.76
1Y	41+11.14	-39.36	601.81	601.91
1Z	41+21.14	-39.02	601.94	602.06
1AA	41+31.13	-38.67	602.08	602.20
1AB	41+41.13	-38.33	602.20	602.33
1AC	41+51.12	-37.99	602.33	602.45
1AD	41+61.11	-37.64	602.45	602.56
1AE	41+71.11	-37.30	602.57	602.66
1AF	41+81.10	-36.96	602.68	602.75
1AG	41+91.10	-36.62	602.79	602.83
1AH	-	-	-	-
1AI	-	-	-	-
℄ W. BRG. PIER 2 WB	41+98.96	-36.35	602.87	602.89
℄ PIER 2 WB	42+01.21	-36.27	602.89	602.91

SOUTH EDGE OF NORTH LANE - WB

Location	Station	Offset	Theoretical Grade Elevations	Theoretical Grade Elevations Adjusted for Dead Load Deflection and Grinding
BK. W. ABUT. WB	38+42.69	-36.00	597.12	597.14
℄ EXP. JT.	38+45.01	-36.00	597.17	597.19
℄ BRG. W. ABUT. WB	38+46.78	-36.00	597.21	597.23
1A	38+56.78	-36.00	597.42	597.49
1B	38+66.78	-36.00	597.63	597.74
1C	38+76.78	-36.00	597.83	597.99
1D	38+86.78	-36.00	598.03	598.22
1E	38+96.78	-36.00	598.22	598.44
1F	39+06.78	-36.00	598.41	598.65
1G	39+16.78	-36.00	598.60	598.85
1H	39+26.78	-36.00	598.78	599.03
1I	39+36.78	-36.00	598.97	599.22
1J	39+46.78	-36.00	599.17	599.39
1K	39+56.78	-36.00	599.36	599.56
1L	39+66.78	-36.00	599.55	599.72
1M	39+76.78	-36.00	599.74	599.88
1N	39+86.78	-36.00	599.93	600.03
1O	39+96.78	-36.00	600.11	600.18
1P	40+06.78	-36.00	600.28	600.33
1Q	40+16.78	-36.00	600.45	600.49
℄ BRG. PIER 1 WB	40+28.53	-36.00	600.65	600.67
1R	40+38.53	-36.00	600.81	600.83
1S	40+48.53	-36.00	600.97	600.99
1T	40+58.53	-36.00	601.13	601.16
1U	40+68.53	-36.00	601.28	601.32
1V	40+78.53	-36.00	601.42	601.49
1W	40+88.53	-36.00	601.57	601.65
1X	40+98.53	-36.00	601.70	601.81
1Y	41+08.53	-36.00	601.84	601.96
1Z	41+18.53	-36.00	601.97	602.10
1AA	41+28.53	-36.00	602.10	602.24
1AB	41+38.53	-36.00	602.22	602.36
1AC	41+48.53	-36.00	602.34	602.47
1AD	41+58.53	-36.00	602.45	602.58
1AE	41+68.53	-36.00	602.56	602.67
1AF	41+78.53	-36.00	602.67	602.75
1AG	41+88.53	-36.00	602.77	602.83
1AH	-	-	-	-
1AI	-	-	-	-
℄ W. BRG. PIER 2 WB	41+98.96	-36.00	602.88	602.90
℄ PIER 2 WB	42+01.21	-36.00	602.90	602.92

GIRDER W5

Location	Station	Offset	Theoretical Grade Elevations	Theoretical Grade Elevations Adjusted for Dead Load Deflection and Grinding
BK. W. ABUT. WB	38+43.86	-38.67	597.16	597.18
℄ EXP. JT.	38+45.61	-38.62	597.19	597.21
℄ BRG. W. ABUT. WB	38+47.90	-38.55	597.24	597.26
1A	38+57.89	-38.27	597.44	597.51
1B	38+67.89	-37.99	597.64	597.76
1C	38+77.89	-37.71	597.84	598.00
1D	38+87.88	-37.42	598.04	598.23
1E	38+97.88	-37.14	598.23	598.45
1F	39+07.87	-36.86	598.42	598.66
1G	39+17.87	-36.58	598.61	598.86
1H	39+27.87	-36.29	598.79	599.04
1I	39+37.86	-36.01	598.99	599.24
1J	39+47.86	-35.73	599.19	599.41
1K	39+57.85	-35.45	599.39	599.59
1L	39+67.85	-35.16	599.59	599.75
1M	39+77.85	-34.88	599.78	599.91
1N	39+87.84	-34.60	599.97	600.07
1O	39+97.84	-34.32	600.15	600.23
1P	40+07.83	-34.03	600.33	600.38
1Q	40+17.83	-33.75	600.50	600.54
℄ BRG. PIER 1 WB	40+27.44	-33.48	600.67	600.69
1R	40+37.44	-33.20	600.84	600.86
1S	40+47.43	-32.92	601.00	601.02
1T	40+57.43	-32.63	601.16	601.19
1U	40+67.43	-32.35	601.31	601.36
1V	40+77.42	-32.07	601.47	601.53
1W	40+87.42	-31.79	601.61	601.70
1X	40+97.41	-31.50	601.76	601.86
1Y	41+07.41	-31.22	601.90	602.01
1Z	41+17.41	-30.94	602.03	602.16
1AA	41+27.40	-30.66	602.16	602.30
1AB	41+37.40	-30.37	602.29	602.43
1AC	41+47.39	-30.09	602.41	602.55
1AD	41+57.39	-29.81	602.53	602.66
1AE	41+67.39	-29.53	602.65	602.75
1AF	41+77.38	-29.25	602.76	602.84
1AG	41+87.38	-28.96	602.87	602.92
1AH	-	-	-	-
1AI	-	-	-	-
℄ W. BRG. PIER 2 WB	41+98.96	-28.64	602.99	603.01
℄ PIER 2 WB	42+01.21	-28.57	603.01	603.03

NOTES:

1. All Elevations and Offsets are in feet.
2. Offsets are measured with respect to the I-80 WB PGL. Negative offsets are left and positive are right of the PGL.

GIRDER W6

Location	Station	Offset	Theoretical Grade Elevations	Theoretical Grade Elevations Adjusted for Dead Load Deflection and Grinding
BK. W. ABUT. WB	38+39.63	-28.95	597.02	597.04
℄ EXP. JT.	38+41.39	-28.91	597.06	597.08
℄ BRG. W. ABUT. WB	38+43.68	-28.86	597.12	597.14
1A	38+53.68	-28.64	597.34	597.41
1B	38+63.68	-28.41	597.57	597.69
1C	38+73.68	-28.19	597.79	597.95
1D	38+83.67	-27.97	598.00	598.20
1E	38+93.67	-27.74	598.22	598.44
1F	39+03.67	-27.52	598.43	598.67
1G	39+13.67	-27.30	598.63	598.89
1H	39+23.66	-27.07	598.84	599.09
1I	39+33.66	-26.85	599.04	599.29
1J	39+43.66	-26.63	599.25	599.47
1K	39+53.66	-26.40	599.45	599.64
1L	39+63.65	-26.18	599.64	599.81
1M	39+73.65	-25.96	599.83	599.97
1N	39+83.65	-25.73	600.02	600.13
1O	39+93.65	-25.51	600.21	600.28
1P	40+03.64	-25.29	600.39	600.44
1Q	40+13.64	-25.06	600.56	600.60
℄ BRG. PIER 1 WB	40+23.69	-24.84	600.74	600.76
1R	40+33.68	-24.62	600.90	600.93
1S	40+43.68	-24.39	601.07	601.09
1T	40+53.68	-24.17	601.23	601.26
1U	40+63.68	-23.95	601.38	601.44
1V	40+73.67	-23.72	601.54	601.61
1W	40+83.67	-23.50	601.68	601.78
1X	40+93.67	-23.28	601.83	601.94
1Y	41+03.67	-23.05	601.97	602.10
1Z	41+13.66	-22.83	602.10	602.25
1AA	41+23.66	-22.61	602.24	602.39
1AB	41+33.66	-22.38	602.36	602.52
1AC	41+43.66	-22.16	602.49	602.64
1AD	41+53.65	-21.94	602.61	602.75
1AE	41+63.65	-21.71	602.73	602.85
1AF	41+73.65	-21.49	602.84	602.94
1AG	41+83.65	-21.27	602.95	603.02
1AH	41+93.64	-21.04	603.05	603.09
1AI	-	-	-	-
℄ W. BRG. PIER 2 WB	41+98.96	-20.93	603.10	603.12
℄ PIER 2 WB	42+01.21	-20.87	603.13	603.15

CROWN - WB

Location	Station	Offset	Theoretical Grade Elevations	Theoretical Grade Elevations Adjusted for Dead Load Deflection and Grinding
BK. W. ABUT. WB	38+37.48	-24.00	596.95	596.97
℄ EXP. JT.	38+39.79	-24.00	597.01	597.03
℄ BRG. W. ABUT. WB	38+41.57	-24.00	597.05	597.07
1A	38+51.57	-24.00	597.29	597.36
1B	38+61.57	-24.00	597.52	597.64
1C	38+71.57	-24.00	597.75	597.91
1D	38+81.57	-24.00	597.97	598.17
1E	38+91.57	-24.00	598.20	598.42
1F	39+01.57	-24.00	598.41	598.66
1G	39+11.57	-24.00	598.63	598.88
1H	39+21.57	-24.00	598.84	599.09
1I	39+31.57	-24.00	599.04	599.29
1J	39+41.57	-24.00	599.24	599.47
1K	39+51.57	-24.00	599.44	599.64
1L	39+61.57	-24.00	599.64	599.80
1M	39+71.57	-24.00	599.82	599.96
1N	39+81.57	-24.00	600.01	600.11
1O	39+91.57	-24.00	600.19	600.27
1P	40+01.57	-24.00	600.37	600.42
1Q	40+11.57	-24.00	600.54	600.58
℄ BRG. PIER 1 WB	40+23.32	-24.00	600.74	600.76
1R	40+33.32	-24.00	600.91	600.93
1S	40+43.32	-24.00	601.07	601.09
1T	40+53.32	-24.00	601.22	601.26
1U	40+63.32	-24.00	601.38	601.43
1V	40+73.32	-24.00	601.53	601.60
1W	40+83.32	-24.00	601.67	601.77
1X	40+93.32	-24.00	601.81	601.93
1Y	41+03.32	-24.00	601.95	602.08
1Z	41+13.32	-24.00	602.08	602.23
1AA	41+23.32	-24.00	602.21	602.37
1AB	41+33.32	-24.00	602.34	602.50
1AC	41+43.32	-24.00	602.46	602.61
1AD	41+53.32	-24.00	602.57	602.72
1AE	41+63.32	-24.00	602.69	602.81
1AF	41+73.32	-24.00	602.80	602.90
1AG	41+83.32	-24.00	602.90	602.97
1AH	41+93.32	-24.00	603.00	603.04
1AI	-	-	-	-
℄ W. BRG. PIER 2 WB	41+98.96	-24.00	603.06	603.08
℄ PIER 2 WB	42+01.21	-24.00	603.08	603.10

GIRDER W7

Location	Station	Offset	Theoretical Grade Elevations	Theoretical Grade Elevations Adjusted for Dead Load Deflection and Grinding
BK. W. ABUT. WB	38+35.41	-19.23	596.83	596.85
℄ EXP. JT.	38+37.17	-19.20	596.87	596.89
℄ BRG. W. ABUT. WB	38+39.47	-19.16	596.92	596.95
1A	38+49.47	-19.00	597.16	597.23
1B	38+59.46	-18.83	597.39	597.51
1C	38+69.46	-18.67	597.62	597.78
1D	38+79.46	-18.50	597.84	598.04
1E	38+89.46	-18.34	598.06	598.29
1F	38+99.46	-18.17	598.28	598.52
1G	39+09.46	-18.01	598.49	598.74
1H	39+19.46	-17.84	598.70	598.95
1I	39+29.46	-17.68	598.90	599.15
1J	39+39.45	-17.51	599.10	599.32
1K	39+49.45	-17.34	599.30	599.50
1L	39+59.45	-17.18	599.49	599.66
1M	39+69.45	-17.01	599.68	599.81
1N	39+79.45	-16.85	599.86	599.97
1O	39+89.45	-16.68	600.04	600.12
1P	39+99.45	-16.52	600.22	600.27
1Q	40+09.44	-16.35	600.39	600.43
℄ BRG. PIER 1 WB	40+19.92	-16.18	600.57	600.59
1R	40+29.92	-16.01	600.73	600.76
1S	40+39.92	-15.85	600.89	600.92
1T	40+49.92	-15.68	601.05	601.09
1U	40+59.91	-15.52	601.20	601.26
1V	40+69.91	-15.35	601.35	601.43
1W	40+79.91	-15.19	601.49	601.60
1X	40+89.91	-15.02	601.63	601.76
1Y	40+99.91	-14.85	601.77	601.92
1Z	41+09.91	-14.69	601.90	602.07
1AA	41+19.91	-14.52	602.03	602.21
1AB	41+29.90	-14.36	602.15	602.34
1AC	41+39.90	-14.19	602.27	602.45
1AD	41+49.90	-14.03	602.39	602.55
1AE	41+59.90	-13.86	602.50	602.65
1AF	41+69.90	-13.70	602.60	602.73
1AG	41+79.90	-13.53	602.71	602.80
1AH	41+89.90	-13.36	602.81	602.86
1AI	-	-	-	-
℄ W. BRG. PIER 2 WB	41+98.96	-13.21	602.90	602.92
℄ PIER 2 WB	42+01.21	-13.18	602.92	602.94

NOTES:

1. All Elevations and Offsets are in feet.
2. Offsets are measured with respect to the I-80 WB PGL. Negative offsets are left and positive are right of the PGL.

NORTH EDGE OF SOUTH LANE - WB

Location	Station	Offset	Theoretical Grade Elevations	Theoretical Grade Elevations Adjusted for Dead Load Deflection and Grinding
BK. W. ABUT. WB	38+32.26	-12.00	596.64	596.66
℄ EXP. JT.	38+34.58	-12.00	596.70	596.72
℄ BRG. W. ABUT. WB	38+36.35	-12.00	596.74	596.76
1A	38+46.35	-12.00	596.98	597.05
1B	38+56.35	-12.00	597.22	597.34
1C	38+66.35	-12.00	597.45	597.62
1D	38+76.35	-12.00	597.68	597.88
1E	38+86.35	-12.00	597.90	598.13
1F	38+96.35	-12.00	598.12	598.37
1G	39+06.35	-12.00	598.34	598.59
1H	39+16.35	-12.00	598.55	598.80
1I	39+26.35	-12.00	598.76	599.00
1J	39+36.35	-12.00	598.96	599.18
1K	39+46.35	-12.00	599.16	599.36
1L	39+56.35	-12.00	599.35	599.52
1M	39+66.35	-12.00	599.55	599.68
1N	39+76.35	-12.00	599.73	599.84
1O	39+86.35	-12.00	599.92	599.99
1P	39+96.35	-12.00	600.10	600.15
1Q	40+06.35	-12.00	600.27	600.31
℄ BRG. PIER 1 WB	40+18.10	-12.00	600.47	600.50
1R	40+28.10	-12.00	600.64	600.67
1S	40+38.10	-12.00	600.80	600.84
1T	40+48.10	-12.00	600.96	601.01
1U	40+58.10	-12.00	601.12	601.19
1V	40+68.10	-12.00	601.27	601.37
1W	40+78.10	-12.00	601.42	601.54
1X	40+88.10	-12.00	601.56	601.71
1Y	40+98.10	-12.00	601.70	601.88
1Z	41+08.10	-12.00	601.83	602.03
1AA	41+18.10	-12.00	601.96	602.17
1AB	41+28.10	-12.00	602.09	602.31
1AC	41+38.10	-12.00	602.21	602.43
1AD	41+48.10	-12.00	602.33	602.54
1AE	41+58.10	-12.00	602.45	602.63
1AF	41+68.10	-12.00	602.56	602.71
1AG	41+78.10	-12.00	602.67	602.78
1AH	41+88.10	-12.00	602.77	602.85
1AI	-	-	-	-
℄ W. BRG. PIER 2 WB	41+98.96	-12.00	602.88	602.90
℄ PIER 2 WB	42+01.21	-12.00	602.90	602.92

GIRDER W8

Location	Station	Offset	Theoretical Grade Elevations	Theoretical Grade Elevations Adjusted for Dead Load Deflection and Grinding
BK. W. ABUT. WB	38+31.18	-9.52	596.57	596.59
℄ EXP. JT.	38+32.95	-9.50	596.61	596.63
℄ BRG. W. ABUT. WB	38+35.25	-9.47	596.66	596.69
1A	38+45.25	-9.36	596.90	596.98
1B	38+55.25	-9.25	597.14	597.26
1C	38+65.25	-9.14	597.37	597.53
1D	38+75.25	-9.03	597.59	597.80
1E	38+85.25	-8.93	597.81	598.05
1F	38+95.25	-8.82	598.03	598.28
1G	39+05.25	-8.71	598.25	598.51
1H	39+15.25	-8.60	598.46	598.71
1I	39+25.25	-8.49	598.66	598.91
1J	39+35.25	-8.38	598.86	599.09
1K	39+45.25	-8.27	599.06	599.26
1L	39+55.25	-8.16	599.26	599.42
1M	39+65.25	-8.05	599.45	599.58
1N	39+75.24	-7.94	599.63	599.73
1O	39+85.24	-7.84	599.81	599.89
1P	39+95.24	-7.73	599.99	600.04
1Q	40+05.24	-7.62	600.17	600.20
℄ BRG. PIER 1 WB	40+16.14	-7.50	600.35	600.37
1R	40+26.14	-7.39	600.52	600.54
1S	40+36.14	-7.28	600.68	600.71
1T	40+46.14	-7.17	600.84	600.89
1U	40+56.14	-7.06	600.99	601.06
1V	40+66.14	-6.95	601.14	601.24
1W	40+76.14	-6.84	601.29	601.41
1X	40+86.14	-6.73	601.43	601.58
1Y	40+96.14	-6.63	601.56	601.74
1Z	41+06.14	-6.52	601.70	601.90
1AA	41+16.14	-6.41	601.83	602.04
1AB	41+26.14	-6.30	601.95	602.17
1AC	41+36.14	-6.19	602.07	602.29
1AD	41+46.14	-6.08	602.19	602.39
1AE	41+56.14	-5.97	602.31	602.49
1AF	41+66.14	-5.86	602.42	602.57
1AG	41+76.14	-5.75	602.52	602.64
1AH	41+86.13	-5.64	602.62	602.70
1AI	-	-	-	-
℄ W. BRG. PIER 2 WB	41+98.96	-5.50	602.75	602.77
℄ PIER 2 WB	42+01.21	-5.48	602.77	602.79

PGL I-80 WB

Location	Station	Offset	Theoretical Grade Elevations	Theoretical Grade Elevations Adjusted for Dead Load Deflection and Grinding
BK. W. ABUT. WB	38+27.04	0.00	596.28	596.30
℄ EXP. JT.	38+29.36	0.00	596.33	596.35
℄ BRG. W. ABUT. WB	38+31.13	0.00	596.38	596.40
1A	38+41.13	0.00	596.62	596.69
1B	38+51.13	0.00	596.85	596.98
1C	38+61.13	0.00	597.09	597.26
1D	38+71.13	0.00	597.32	597.52
1E	38+81.13	0.00	597.54	597.78
1F	38+91.13	0.00	597.77	598.02
1G	39+01.13	0.00	597.98	598.24
1H	39+11.13	0.00	598.20	598.45
1I	39+21.13	0.00	598.41	598.65
1J	39+31.13	0.00	598.61	598.84
1K	39+41.13	0.00	598.82	599.01
1L	39+51.13	0.00	599.01	599.18
1M	39+61.13	0.00	599.21	599.34
1N	39+71.13	0.00	599.40	599.50
1O	39+81.13	0.00	599.58	599.65
1P	39+91.13	0.00	599.76	599.81
1Q	40+01.13	0.00	599.94	599.97
℄ BRG. PIER 1 WB	40+12.88	0.00	600.15	600.17
1R	40+22.88	0.00	600.31	600.34
1S	40+32.88	0.00	600.48	600.52
1T	40+42.88	0.00	600.64	600.70
1U	40+52.88	0.00	600.80	600.88
1V	40+62.88	0.00	600.95	601.07
1W	40+72.88	0.00	601.10	601.25
1X	40+82.88	0.00	601.25	601.42
1Y	40+92.88	0.00	601.39	601.59
1Z	41+02.88	0.00	601.52	601.75
1AA	41+12.88	0.00	601.66	601.90
1AB	41+22.88	0.00	601.79	602.04
1AC	41+32.88	0.00	601.91	602.16
1AD	41+42.88	0.00	602.03	602.27
1AE	41+52.88	0.00	602.15	602.36
1AF	41+62.88	0.00	602.26	602.45
1AG	41+72.88	0.00	602.37	602.52
1AH	41+82.88	0.00	602.48	602.58
1AI	41+92.88	0.00	602.58	602.63
℄ W. BRG. PIER 2 WB	41+98.96	0.00	602.64	602.66
℄ PIER 2 WB	42+01.21	0.00	602.66	602.68

NOTES:

1. All Elevations and Offsets are in feet.
2. Offsets are measured with respect to the I-80 WB PGL. Negative offsets are left and positive are right of the PGL.

GIRDER W9

Location	Station	Offset	Theoretical Grade Elevations	Theoretical Grade Elevations Adjusted for Dead Load Deflection and Grinding
BK. W. ABUT. WB	38+26.96	0.20	596.27	596.29
℄ EXP. JT.	38+28.73	0.21	596.31	596.33
℄ BRG. W. ABUT. WB	38+31.04	0.22	596.37	596.39
1A	38+41.04	0.28	596.61	596.68
1B	38+51.04	0.33	596.85	596.97
1C	38+61.04	0.38	597.08	597.25
1D	38+71.04	0.44	597.31	597.51
1E	38+81.04	0.49	597.53	597.77
1F	38+91.04	0.55	597.75	598.01
1G	39+01.04	0.60	597.97	598.23
1H	39+11.04	0.65	598.18	598.44
1I	39+21.04	0.71	598.39	598.64
1J	39+31.04	0.76	598.60	598.82
1K	39+41.04	0.82	598.80	599.00
1L	39+51.04	0.87	598.99	599.16
1M	39+61.04	0.92	599.19	599.32
1N	39+71.04	0.98	599.38	599.47
1O	39+81.04	1.03	599.56	599.63
1P	39+91.04	1.09	599.74	599.79
1Q	40+01.04	1.14	599.92	599.95
℄ BRG. PIER 1 WB	40+12.36	1.20	600.11	600.13
1R	40+22.36	1.25	600.28	600.31
1S	40+32.36	1.31	600.45	600.48
1T	40+42.36	1.36	600.61	600.67
1U	40+52.36	1.42	600.76	600.85
1V	40+62.36	1.47	600.91	601.03
1W	40+72.36	1.52	601.06	601.21
1X	40+82.36	1.58	601.21	601.38
1Y	40+92.36	1.63	601.35	601.55
1Z	41+02.36	1.69	601.48	601.71
1AA	41+12.36	1.74	601.62	601.86
1AB	41+22.36	1.79	601.74	601.99
1AC	41+32.36	1.85	601.87	602.11
1AD	41+42.36	1.90	601.99	602.23
1AE	41+52.36	1.95	602.10	602.32
1AF	41+62.36	2.01	602.22	602.40
1AG	41+72.36	2.06	602.32	602.47
1AH	41+82.36	2.12	602.43	602.53
1AI	41+92.36	2.17	602.53	602.58
℄ W. BRG. PIER 2 WB	41+98.96	2.21	602.59	602.61
℄ PIER 2 WB	42+01.21	2.22	602.61	602.64

GIRDER W10

Location	Station	Offset	Theoretical Grade Elevations	Theoretical Grade Elevations Adjusted for Dead Load Deflection and Grinding
BK. W. ABUT. WB	38+22.73	9.92	595.97	595.99
℄ EXP. JT.	38+25.05	9.92	596.03	596.05
℄ BRG. W. ABUT. WB	38+26.82	9.92	596.07	596.09
1A	38+36.82	9.92	596.32	596.39
1B	38+46.82	9.92	596.55	596.67
1C	38+56.82	9.92	596.79	596.95
1D	38+66.82	9.92	597.02	597.22
1E	38+76.82	9.92	597.25	597.47
1F	38+86.82	9.92	597.47	597.71
1G	38+96.82	9.92	597.69	597.94
1H	39+06.82	9.92	597.91	598.15
1I	39+16.82	9.92	598.12	598.35
1J	39+26.82	9.92	598.33	598.54
1K	39+36.82	9.92	598.53	598.72
1L	39+46.82	9.92	598.73	598.88
1M	39+56.82	9.92	598.93	599.05
1N	39+66.82	9.92	599.12	599.21
1O	39+76.82	9.92	599.30	599.37
1P	39+86.82	9.92	599.49	599.53
1Q	39+96.82	9.92	599.67	599.70
℄ BRG. PIER 1 WB	40+08.57	9.92	599.87	599.89
1R	40+18.57	9.92	600.04	600.08
1S	40+28.57	9.92	600.21	600.25
1T	40+38.57	9.92	600.37	600.44
1U	40+48.57	9.92	600.53	600.63
1V	40+58.57	9.92	600.69	600.82
1W	40+68.57	9.92	600.84	601.00
1X	40+78.57	9.92	600.99	601.18
1Y	40+88.57	9.92	601.13	601.36
1Z	40+98.57	9.92	601.27	601.52
1AA	41+08.57	9.92	601.40	601.68
1AB	41+18.57	9.92	601.53	601.82
1AC	41+28.57	9.92	601.66	601.94
1AD	41+38.57	9.92	601.78	602.05
1AE	41+48.57	9.92	601.90	602.15
1AF	41+58.57	9.92	602.02	602.23
1AG	41+68.57	9.92	602.13	602.30
1AH	41+78.57	9.92	602.23	602.37
1AI	41+88.57	9.92	602.34	602.41
℄ W. BRG. PIER 2 WB	41+98.96	9.92	602.44	602.46
℄ PIER 2 WB	42+01.21	9.92	602.46	602.48

INSIDE FACE OF SOUTH PARAPET - WB

Location	Station	Offset	Theoretical Grade Elevations	Theoretical Grade Elevations Adjusted for Dead Load Deflection and Grinding
BK. W. ABUT. WB	38+21.82	12.00	595.91	595.93
℄ EXP. JT.	38+24.14	12.00	595.96	595.98
℄ BRG. W. ABUT. WB	38+25.91	12.00	596.01	596.03
1A	38+35.91	12.00	596.25	596.32
1B	38+45.91	12.00	596.49	596.61
1C	38+55.91	12.00	596.73	596.89
1D	38+65.91	12.00	596.96	597.16
1E	38+75.91	12.00	597.19	597.41
1F	38+85.91	12.00	597.41	597.65
1G	38+95.91	12.00	597.63	597.88
1H	39+05.91	12.00	597.85	598.09
1I	39+15.91	12.00	598.06	598.29
1J	39+25.91	12.00	598.27	598.48
1K	39+35.91	12.00	598.47	598.66
1L	39+45.91	12.00	598.67	598.83
1M	39+55.91	12.00	598.87	598.99
1N	39+65.91	12.00	599.06	599.15
1O	39+75.91	12.00	599.25	599.31
1P	39+85.91	12.00	599.43	599.47
1Q	39+95.91	12.00	599.61	599.64
℄ BRG. PIER 1 WB	40+07.66	12.00	599.82	599.84
1R	40+17.66	12.00	599.99	600.02
1S	40+27.66	12.00	600.15	600.20
1T	40+37.66	12.00	600.32	600.39
1U	40+47.66	12.00	600.48	600.57
1V	40+57.66	12.00	600.63	600.76
1W	40+67.66	12.00	600.78	600.95
1X	40+77.66	12.00	600.93	601.13
1Y	40+87.66	12.00	601.07	601.30
1Z	40+97.66	12.00	601.21	601.47
1AA	41+07.66	12.00	601.35	601.62
1AB	41+17.66	12.00	601.48	601.76
1AC	41+27.66	12.00	601.61	601.89
1AD	41+37.66	12.00	601.73	602.00
1AE	41+47.66	12.00	601.85	602.10
1AF	41+57.66	12.00	601.96	602.18
1AG	41+67.66	12.00	602.08	602.25
1AH	41+77.66	12.00	602.18	602.31
1AI	41+87.66	12.00	602.29	602.36
℄ W. BRG. PIER 2 WB	41+98.96	12.00	602.40	602.42
℄ PIER 2 WB	42+01.21	12.00	602.42	602.44

NOTES:

1. All Elevations and Offsets are in feet.
2. Offsets are measured with respect to the I-80 WB PGL. Negative offsets are left and positive are right of the PGL.

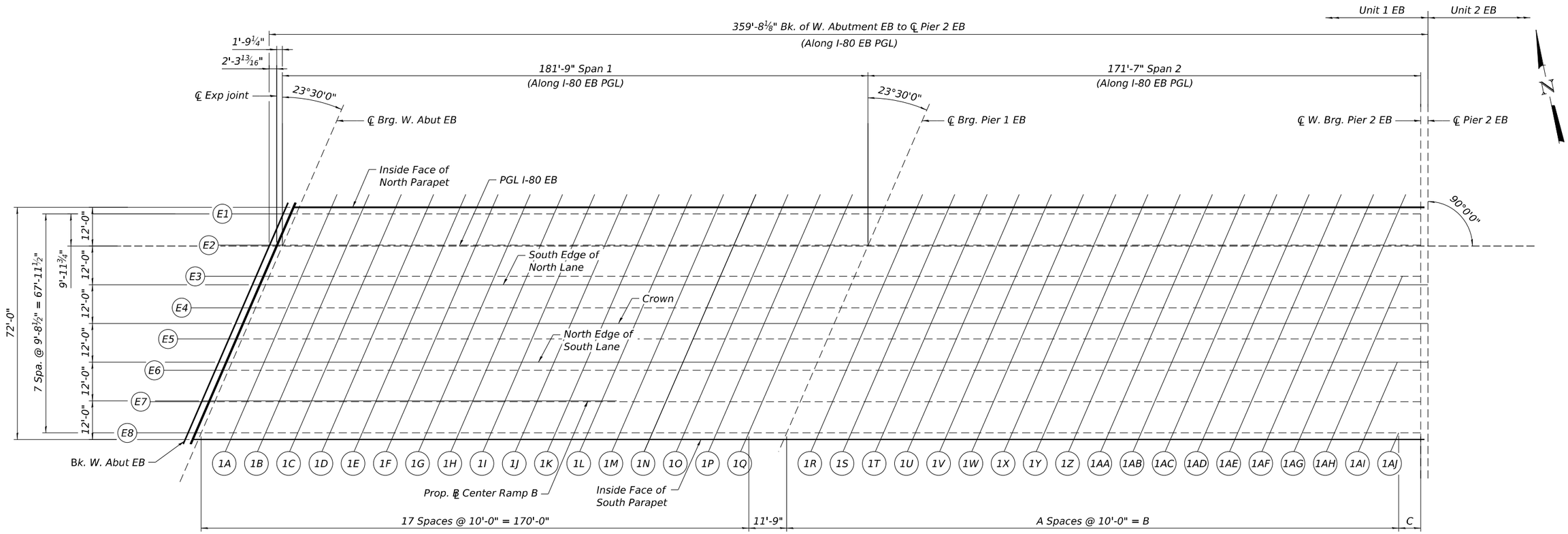

PLAN - UNIT 1 EB

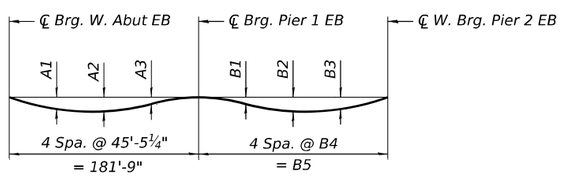

DEAD LOAD DEFLECTION DIAGRAM

(Includes weight of concrete only.)

Note:
The above deflections are not to be used in the field if the engineer is working from the grade elevations adjusted for dead load deflections and grinding as shown on sheets S-37 to S-41.

Girder	DEAD LOAD DEFLECTIONS							
	Span 1			Span 2				
	A1	A2	A3	B1	B2	B3	B4	B5
E1	2⅝"	3⅛"	1⅜"	⅜"	1⅜"	1¼"	41'-9¾" (-)	167'-2 9/16"
E2	2⅝"	3"	1⅜"	½"	1⅝"	1½"	42'-10⅜"(+)	171'-5 9/16"
E3	2½"	2⅞"	1¼"	⅝"	1⅞"	1¾"	43'-11 1/16"	175'-8¼"
E4	2⅜"	2⅝"	1"	⅞"	2¼"	2"	44'-11¾"(-)	179'-10⅞"
E5	2¼"	2½"	1"	1"	2⅝"	2¼"	46'-0⅜" (+)	184'-1 9/16"
E6	2¼"	2½"	⅞"	1¼"	3"	2⅜"	47'-1" (+)	188'-4 3/16"
E7	2¼"	2⅜"	⅞"	1½"	3⅜"	3"	48'-1¾"(-)	192'-6⅞"
E8	2⅛"	2¼"	¾"	1¾"	3⅞"	3¼"	49'-2⅜"	196'-9½"

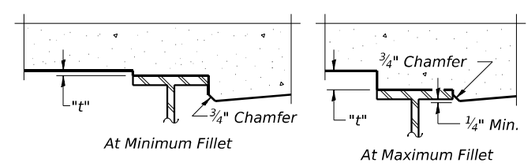

To determine "t": After all structural steel has been erected, elevations of the top flanges of the beams shall be taken at intervals shown. These elevations subtracted from the "Theoretical Grade Elevations Adjusted for Dead Load Deflection and Grinding" shown on sheets S-37 to S-41, minus the initial slab thickness prior to grinding, equals the fillet heights "t" above top flange of beams.

The slab is to be ground after curing to achieve smoothness, but the slab is not to be ground to elevations below the "Theoretical Grade Elevations" shown on sheets S-37 to S-41. For grinding the deck, see Special Provisions.

FILLET HEIGHTS

TOP OF SLAB DIMENSIONS TABLE - UNIT 1 EB

Girder	A	B	C
E1	16	160'-0"	7'-2 15/16"
E2	16	160'-0"	11'-5 9/16"
E3	17	170'-0"	5'-8¼"
E4	17	170'-0"	9'-10⅞"
E5	17	170'-0"	14'-1 9/16"
E6	18	180'-0"	8'-4 3/16"
E7	18	180'-0"	12'-6⅞"
E8	19	190'-0"	6'-9½"

NOTES:

1. The dead load deflections shown in the diagram and used for fillet height determination are based on the Deck Pouring Sequence shown on sheet S-109.
2. If the Contractor elects to use a different pour placement/hardening schedule, then the deflections and fillet heights shall be re-calculated.
3. The cost of re-calculating deflections and adjusting fillet heights shall be included in the cost of Concrete Superstructure.
4. Up to 1/4 inch to be ground off the bridge deck and the bridge approach slabs. The Profile Grade shows the final grade after grinding.

INSIDE FACE OF NORTH PARAPET - EB

Location	Station	Offset	Theoretical Grade Elevations	Theoretical Grade Elevations Adjusted for Dead Load Deflection and Grinding
BK. W. ABUT. EB	38+14.00	-12.00	595.71	595.73
℄ EXP. JT.	38+16.32	-12.00	595.77	595.79
℄ BRG. W. ABUT. EB	38+18.09	-12.00	595.81	595.83
1A	38+28.09	-12.00	596.06	596.14
1B	38+38.09	-12.00	596.30	596.44
1C	38+48.09	-12.00	596.54	596.72
1D	38+58.09	-12.00	596.78	597.00
1E	38+68.09	-12.00	597.01	597.26
1F	38+78.09	-12.00	597.24	597.51
1G	38+88.09	-12.00	597.46	597.75
1H	38+98.09	-12.00	597.68	597.96
1I	39+08.09	-12.00	597.89	598.17
1J	39+18.09	-12.00	598.10	598.36
1K	39+28.09	-12.00	598.31	598.54
1L	39+38.09	-12.00	598.51	598.71
1M	39+48.09	-12.00	598.71	598.87
1N	39+58.09	-12.00	598.91	599.03
1O	39+68.09	-12.00	599.10	599.19
1P	39+78.09	-12.00	599.29	599.35
1Q	39+88.09	-12.00	599.47	599.51
℄ BRG. PIER 1 EB	39+99.84	-12.00	599.68	599.70
1R	40+09.84	-12.00	599.85	599.87
1S	40+19.84	-12.00	600.02	600.05
1T	40+29.84	-12.00	600.19	600.22
1U	40+39.84	-12.00	600.35	600.40
1V	40+49.84	-12.00	600.51	600.58
1W	40+59.84	-12.00	600.67	600.75
1X	40+69.84	-12.00	600.82	600.93
1Y	40+79.84	-12.00	600.96	601.09
1Z	40+89.84	-12.00	601.10	601.24
1AA	40+99.84	-12.00	601.24	601.39
1AB	41+09.84	-12.00	601.38	601.52
1AC	41+19.84	-12.00	601.51	601.64
1AD	41+29.84	-12.00	601.63	601.76
1AE	41+39.84	-12.00	601.76	601.86
1AF	41+49.84	-12.00	601.87	601.95
1AG	41+59.84	-12.00	601.99	602.03
1AH	-	-	-	-
1AI	-	-	-	-
1AJ	-	-	-	-
℄ W. BRG. PIER 2 EB	41+66.20	-12.00	602.06	602.08
℄ PIER 2 EB	41+68.45	-12.00	602.08	602.10

GIRDER E1

Location	Station	Offset	Theoretical Grade Elevations	Theoretical Grade Elevations Adjusted for Dead Load Deflection and Grinding
BK. W. ABUT. EB	38+13.12	-9.98	595.73	595.75
℄ EXP. JT.	38+15.44	-9.98	595.79	595.81
℄ BRG. W. ABUT. EB	38+17.21	-9.98	595.83	595.85
1A	38+27.21	-9.98	596.08	596.16
1B	38+37.21	-9.98	596.32	596.46
1C	38+47.21	-9.98	596.56	596.74
1D	38+57.21	-9.98	596.80	597.02
1E	38+67.21	-9.98	597.03	597.28
1F	38+77.21	-9.98	597.26	597.53
1G	38+87.21	-9.98	597.48	597.77
1H	38+97.21	-9.98	597.70	597.98
1I	39+07.21	-9.98	597.91	598.19
1J	39+17.21	-9.98	598.13	598.38
1K	39+27.21	-9.98	598.33	598.56
1L	39+37.21	-9.98	598.54	598.73
1M	39+47.21	-9.98	598.74	598.89
1N	39+57.21	-9.98	598.93	599.05
1O	39+67.21	-9.98	599.12	599.21
1P	39+77.21	-9.98	599.31	599.37
1Q	39+87.21	-9.98	599.49	599.53
℄ BRG. PIER 1 EB	39+98.96	-9.98	599.70	599.72
1R	40+08.96	-9.98	599.88	599.90
1S	40+18.96	-9.98	600.05	600.07
1T	40+28.96	-9.98	600.22	600.25
1U	40+38.96	-9.98	600.38	600.43
1V	40+48.96	-9.98	600.54	600.61
1W	40+58.96	-9.98	600.69	600.78
1X	40+68.96	-9.98	600.84	600.95
1Y	40+78.96	-9.98	600.99	601.12
1Z	40+88.96	-9.98	601.13	601.27
1AA	40+98.96	-9.98	601.27	601.42
1AB	41+08.96	-9.98	601.41	601.55
1AC	41+18.96	-9.98	601.54	601.67
1AD	41+28.96	-9.98	601.66	601.79
1AE	41+38.96	-9.98	601.79	601.89
1AF	41+48.96	-9.98	601.90	601.98
1AG	41+58.96	-9.98	602.02	602.06
1AH	-	-	-	-
1AI	-	-	-	-
1AJ	-	-	-	-
℄ W. BRG. PIER 2 EB	41+66.20	-9.98	602.10	602.12
℄ PIER 2 EB	41+68.45	-9.98	602.12	602.14

GIRDER E2

Location	Station	Offset	Theoretical Grade Elevations	Theoretical Grade Elevations Adjusted for Dead Load Deflection and Grinding
BK. W. ABUT. EB	38+08.90	-0.27	595.82	595.84
℄ EXP. JT.	38+11.22	-0.27	595.88	595.90
℄ BRG. W. ABUT. EB	38+12.99	-0.27	595.92	595.94
1A	38+22.99	-0.27	596.17	596.25
1B	38+32.99	-0.27	596.42	596.55
1C	38+42.99	-0.27	596.66	596.84
1D	38+52.99	-0.27	596.89	597.12
1E	38+62.99	-0.27	597.13	597.38
1F	38+72.99	-0.27	597.36	597.63
1G	38+82.99	-0.27	597.58	597.87
1H	38+92.99	-0.27	597.80	598.09
1I	39+02.99	-0.27	598.02	598.29
1J	39+12.99	-0.27	598.23	598.48
1K	39+22.99	-0.27	598.44	598.67
1L	39+32.99	-0.27	598.65	598.84
1M	39+42.99	-0.27	598.85	599.00
1N	39+52.99	-0.27	599.04	599.16
1O	39+62.99	-0.27	599.24	599.32
1P	39+72.99	-0.27	599.43	599.48
1Q	39+82.99	-0.27	599.61	599.65
℄ BRG. PIER 1 EB	39+94.74	-0.27	599.82	599.84
1R	40+04.74	-0.27	600.00	600.02
1S	40+14.74	-0.27	600.17	600.20
1T	40+24.74	-0.27	600.34	600.38
1U	40+34.74	-0.27	600.50	600.56
1V	40+44.74	-0.27	600.67	600.75
1W	40+54.74	-0.27	600.82	600.93
1X	40+64.74	-0.27	600.97	601.10
1Y	40+74.74	-0.27	601.12	601.27
1Z	40+84.74	-0.27	601.27	601.43
1AA	40+94.74	-0.27	601.41	601.58
1AB	41+04.74	-0.27	601.54	601.71
1AC	41+14.74	-0.27	601.68	601.84
1AD	41+24.74	-0.27	601.80	601.95
1AE	41+34.74	-0.27	601.93	602.05
1AF	41+44.74	-0.27	602.05	602.14
1AG	41+54.74	-0.27	602.17	602.23
1AH	-	-	-	-
1AI	-	-	-	-
1AJ	-	-	-	-
℄ W. BRG. PIER 2 EB	41+66.20	-0.27	602.29	602.31
℄ PIER 2 EB	41+68.45	-0.27	602.32	602.34

NOTES:

1. All Elevations and Offsets are in feet.
2. Offsets are measured with respect to the I-80 EB PGL. Negative offsets are left and positive are right of the PGL.

PGL I-80 EB

Location	Station	Offset	Theoretical Grade Elevations	Theoretical Grade Elevations Adjusted for Dead Load Deflection and Grinding
BK. W. ABUT. EB	38+08.78	0.00	595.82	595.84
℄ EXP. JT.	38+11.10	0.00	595.88	595.90
℄ BRG. W. ABUT. EB	38+12.87	0.00	595.92	595.94
1A	38+22.87	0.00	596.17	596.25
1B	38+32.87	0.00	596.42	596.55
1C	38+42.87	0.00	596.66	596.84
1D	38+52.87	0.00	596.90	597.12
1E	38+62.87	0.00	597.13	597.38
1F	38+72.87	0.00	597.36	597.63
1G	38+82.87	0.00	597.58	597.87
1H	38+92.87	0.00	597.80	598.09
1I	39+02.87	0.00	598.02	598.30
1J	39+12.87	0.00	598.23	598.49
1K	39+22.87	0.00	598.44	598.67
1L	39+32.87	0.00	598.65	598.84
1M	39+42.87	0.00	598.85	599.00
1N	39+52.87	0.00	599.05	599.17
1O	39+62.87	0.00	599.24	599.33
1P	39+72.87	0.00	599.43	599.49
1Q	39+82.87	0.00	599.61	599.65
℄ BRG. PIER 1 EB	39+94.62	0.00	599.83	599.85
1R	40+04.62	0.00	600.00	600.03
1S	40+14.62	0.00	600.18	600.20
1T	40+24.62	0.00	600.34	600.38
1U	40+34.62	0.00	600.51	600.57
1V	40+44.62	0.00	600.67	600.75
1W	40+54.62	0.00	600.83	600.93
1X	40+64.62	0.00	600.98	601.11
1Y	40+74.62	0.00	601.13	601.27
1Z	40+84.62	0.00	601.27	601.43
1AA	40+94.62	0.00	601.41	601.58
1AB	41+04.62	0.00	601.55	601.72
1AC	41+14.62	0.00	601.68	601.84
1AD	41+24.62	0.00	601.81	601.95
1AE	41+34.62	0.00	601.93	602.06
1AF	41+44.62	0.00	602.05	602.15
1AG	41+54.62	0.00	602.17	602.23
1AH	-	-	-	-
1AI	-	-	-	-
1AJ	-	-	-	-
℄ W. BRG. PIER 2 EB	41+66.20	0.00	602.30	602.32
℄ PIER 2 EB	41+68.45	0.00	602.32	602.34

GIRDER E3

Location	Station	Offset	Theoretical Grade Elevations	Theoretical Grade Elevations Adjusted for Dead Load Deflection and Grinding
BK. W. ABUT. EB	38+04.68	9.44	595.61	595.63
℄ EXP. JT.	38+06.99	9.44	595.67	595.70
℄ BRG. W. ABUT. EB	38+08.77	9.44	595.72	595.74
1A	38+18.77	9.44	595.99	596.07
1B	38+28.77	9.44	596.26	596.39
1C	38+38.77	9.44	596.52	596.70
1D	38+48.77	9.44	596.78	597.00
1E	38+58.77	9.44	597.04	597.28
1F	38+68.77	9.44	597.29	597.55
1G	38+78.77	9.44	597.54	597.81
1H	38+88.77	9.44	597.78	598.05
1I	38+98.77	9.44	598.02	598.28
1J	39+08.77	9.44	598.25	598.49
1K	39+18.77	9.44	598.48	598.69
1L	39+28.77	9.44	598.71	598.89
1M	39+38.77	9.44	598.93	599.08
1N	39+48.77	9.44	599.15	599.26
1O	39+58.77	9.44	599.35	599.43
1P	39+68.77	9.44	599.54	599.59
1Q	39+78.77	9.44	599.73	599.76
℄ BRG. PIER 1 EB	39+90.52	9.44	599.94	599.96
1R	40+00.52	9.44	600.12	600.14
1S	40+10.52	9.44	600.29	600.33
1T	40+20.52	9.44	600.46	600.51
1U	40+30.52	9.44	600.63	600.70
1V	40+40.52	9.44	600.79	600.88
1W	40+50.52	9.44	600.95	601.07
1X	40+60.52	9.44	601.10	601.25
1Y	40+70.52	9.44	601.25	601.42
1Z	40+80.52	9.44	601.40	601.58
1AA	40+90.52	9.44	601.54	601.73
1AB	41+00.52	9.44	601.68	601.87
1AC	41+10.52	9.44	601.81	602.00
1AD	41+20.52	9.44	601.94	602.12
1AE	41+30.52	9.44	602.07	602.22
1AF	41+40.52	9.44	602.19	602.31
1AG	41+50.52	9.44	602.31	602.39
1AH	41+60.52	9.44	602.42	602.47
1AI	-	-	-	-
1AJ	-	-	-	-
℄ W. BRG. PIER 2 EB	41+66.20	9.44	602.49	602.51
℄ PIER 2 EB	41+68.45	9.44	602.51	602.53

SOUTH EDGE OF NORTH LANE - EB

Location	Station	Offset	Theoretical Grade Elevations	Theoretical Grade Elevations Adjusted for Dead Load Deflection and Grinding
BK. W. ABUT. EB	38+03.56	12.00	595.55	595.57
℄ EXP. JT.	38+05.88	12.00	595.62	595.64
℄ BRG. W. ABUT. EB	38+07.65	12.00	595.67	595.69
1A	38+17.65	12.00	595.94	596.02
1B	38+27.65	12.00	596.22	596.34
1C	38+37.65	12.00	596.48	596.66
1D	38+47.65	12.00	596.75	596.96
1E	38+57.65	12.00	597.01	597.25
1F	38+67.65	12.00	597.27	597.53
1G	38+77.65	12.00	597.52	597.79
1H	38+87.65	12.00	597.77	598.04
1I	38+97.65	12.00	598.01	598.27
1J	39+07.65	12.00	598.25	598.49
1K	39+17.65	12.00	598.49	598.70
1L	39+27.65	12.00	598.72	598.90
1M	39+37.65	12.00	598.95	599.09
1N	39+47.65	12.00	599.18	599.29
1O	39+57.65	12.00	599.38	599.46
1P	39+67.65	12.00	599.57	599.62
1Q	39+77.65	12.00	599.76	599.79
℄ BRG. PIER 1 EB	39+89.40	12.00	599.97	599.99
1R	39+99.40	12.00	600.15	600.18
1S	40+09.40	12.00	600.33	600.36
1T	40+19.40	12.00	600.50	600.54
1U	40+29.40	12.00	600.66	600.73
1V	40+39.40	12.00	600.83	600.92
1W	40+49.40	12.00	600.98	601.10
1X	40+59.40	12.00	601.14	601.28
1Y	40+69.40	12.00	601.29	601.45
1Z	40+79.40	12.00	601.44	601.62
1AA	40+89.40	12.00	601.58	601.77
1AB	40+99.40	12.00	601.72	601.91
1AC	41+09.40	12.00	601.85	602.04
1AD	41+19.40	12.00	601.98	602.15
1AE	41+29.40	12.00	602.11	602.26
1AF	41+39.40	12.00	602.23	602.35
1AG	41+49.40	12.00	602.35	602.43
1AH	41+59.40	12.00	602.46	602.51
1AI	-	-	-	-
1AJ	-	-	-	-
℄ W. BRG. PIER 2 EB	41+66.20	12.00	602.54	602.56
℄ PIER 2 EB	41+68.45	12.00	602.56	602.58

NOTES:

1. All Elevations and Offsets are in feet.
2. Offsets are measured with respect to the I-80 EB PGL. Negative offsets are left and positive are right of the PGL.

GIRDER E4

Location	Station	Offset	Theoretical Grade Elevations	Theoretical Grade Elevations Adjusted for Dead Load Deflection and Grinding
BK. W. ABUT. EB	38+00.46	19.15	595.38	595.40
℄ EXP. JT.	38+02.77	19.15	595.45	595.47
℄ BRG. W. ABUT. EB	38+04.55	19.15	595.50	595.52
1A	38+14.55	19.15	595.79	595.86
1B	38+24.55	19.15	596.08	596.20
1C	38+34.55	19.15	596.37	596.53
1D	38+44.55	19.15	596.65	596.85
1E	38+54.55	19.15	596.92	597.15
1F	38+64.55	19.15	597.20	597.44
1G	38+74.55	19.15	597.47	597.72
1H	38+84.55	19.15	597.73	597.98
1I	38+94.55	19.15	597.99	598.23
1J	39+04.55	19.15	598.25	598.47
1K	39+14.55	19.15	598.50	598.70
1L	39+24.55	19.15	598.75	598.91
1M	39+34.55	19.15	598.99	599.12
1N	39+44.55	19.15	599.21	599.31
1O	39+54.55	19.15	599.43	599.50
1P	39+64.55	19.15	599.62	599.67
1Q	39+74.55	19.15	599.81	599.84
℄ BRG. PIER 1 EB	39+86.30	19.15	600.02	600.04
1R	39+96.30	19.15	600.20	600.23
1S	40+06.30	19.15	600.38	600.42
1T	40+16.30	19.15	600.55	600.61
1U	40+26.30	19.15	600.72	600.80
1V	40+36.30	19.15	600.88	600.99
1W	40+46.30	19.15	601.04	601.18
1X	40+56.30	19.15	601.20	601.36
1Y	40+66.30	19.15	601.35	601.53
1Z	40+76.30	19.15	601.50	601.70
1AA	40+86.30	19.15	601.64	601.86
1AB	40+96.30	19.15	601.78	602.00
1AC	41+06.30	19.15	601.92	602.13
1AD	41+16.30	19.15	602.05	602.25
1AE	41+26.30	19.15	602.18	602.35
1AF	41+36.30	19.15	602.30	602.44
1AG	41+46.30	19.15	602.42	602.53
1AH	41+56.30	19.15	602.54	602.60
1AI	-	-	-	-
1AJ	-	-	-	-
℄ W. BRG. PIER 2 EB	41+66.20	19.15	602.65	602.67
℄ PIER 2 EB	41+68.45	19.15	602.67	602.69

CROWN - EB

Location	Station	Offset	Theoretical Grade Elevations	Theoretical Grade Elevations Adjusted for Dead Load Deflection and Grinding
BK. W. ABUT. EB	37+98.35	24.00	595.25	595.28
℄ EXP. JT.	38+00.66	24.00	595.33	595.35
℄ BRG. W. ABUT. EB	38+02.43	24.00	595.38	595.40
1A	38+12.43	24.00	595.68	595.75
1B	38+22.43	24.00	595.98	596.10
1C	38+32.43	24.00	596.28	596.44
1D	38+42.43	24.00	596.57	596.77
1E	38+52.43	24.00	596.86	597.08
1F	38+62.43	24.00	597.15	597.38
1G	38+72.43	24.00	597.43	597.67
1H	38+82.43	24.00	597.70	597.94
1I	38+92.43	24.00	597.97	598.20
1J	39+02.43	24.00	598.24	598.45
1K	39+12.43	24.00	598.51	598.69
1L	39+22.43	24.00	598.77	598.92
1M	39+32.43	24.00	599.01	599.13
1N	39+42.43	24.00	599.24	599.33
1O	39+52.43	24.00	599.46	599.52
1P	39+62.43	24.00	599.65	599.69
1Q	39+72.43	24.00	599.84	599.87
℄ BRG. PIER 1 EB	39+84.18	24.00	600.06	600.08
1R	39+94.18	24.00	600.24	600.27
1S	40+04.18	24.00	600.42	600.46
1T	40+14.18	24.00	600.59	600.65
1U	40+24.18	24.00	600.76	600.85
1V	40+34.18	24.00	600.92	601.04
1W	40+44.18	24.00	601.08	601.23
1X	40+54.18	24.00	601.24	601.42
1Y	40+64.18	24.00	601.39	601.60
1Z	40+74.18	24.00	601.54	601.77
1AA	40+84.18	24.00	601.68	601.93
1AB	40+94.18	24.00	601.82	602.08
1AC	41+04.18	24.00	601.96	602.20
1AD	41+14.18	24.00	602.09	602.33
1AE	41+24.18	24.00	602.22	602.43
1AF	41+34.18	24.00	602.35	602.52
1AG	41+44.18	24.00	602.47	602.60
1AH	41+54.18	24.00	602.58	602.67
1AI	-	-	-	-
1AJ	-	-	-	-
℄ W. BRG. PIER 2 EB	41+66.20	24.00	602.72	602.74
℄ PIER 2 EB	41+68.45	24.00	602.74	602.76

GIRDER E5

Location	Station	Offset	Theoretical Grade Elevations	Theoretical Grade Elevations Adjusted for Dead Load Deflection and Grinding
BK. W. ABUT. EB	37+96.23	28.85	595.12	595.14
℄ EXP. JT.	37+98.55	28.85	595.19	595.21
℄ BRG. W. ABUT. EB	38+00.32	28.85	595.24	595.26
1A	38+10.32	28.85	595.55	595.62
1B	38+20.32	28.85	595.85	595.97
1C	38+30.32	28.85	596.15	596.30
1D	38+40.32	28.85	596.44	596.63
1E	38+50.32	28.85	596.73	596.95
1F	38+60.32	28.85	597.01	597.25
1G	38+70.32	28.85	597.29	597.54
1H	38+80.32	28.85	597.57	597.81
1I	38+90.32	28.85	597.84	598.07
1J	39+00.32	28.85	598.11	598.32
1K	39+10.32	28.85	598.38	598.56
1L	39+20.32	28.85	598.64	598.79
1M	39+30.32	28.85	598.89	599.01
1N	39+40.32	28.85	599.12	599.21
1O	39+50.32	28.85	599.34	599.40
1P	39+60.32	28.85	599.54	599.58
1Q	39+70.32	28.85	599.73	599.76
℄ BRG. PIER 1 EB	39+82.07	28.85	599.95	599.97
1R	39+92.07	28.85	600.13	600.16
1S	40+02.07	28.85	600.31	600.35
1T	40+12.07	28.85	600.48	600.54
1U	40+22.07	28.85	600.65	600.74
1V	40+32.07	28.85	600.81	600.93
1W	40+42.07	28.85	600.98	601.13
1X	40+52.07	28.85	601.13	601.32
1Y	40+62.07	28.85	601.29	601.49
1Z	40+72.07	28.85	601.44	601.67
1AA	40+82.07	28.85	601.58	601.82
1AB	40+92.07	28.85	601.72	601.97
1AC	41+02.07	28.85	601.86	602.10
1AD	41+12.07	28.85	601.99	602.23
1AE	41+22.07	28.85	602.12	602.33
1AF	41+32.07	28.85	602.25	602.42
1AG	41+42.07	28.85	602.37	602.50
1AH	41+52.07	28.85	602.49	602.58
1AI	-	-	-	-
1AJ	-	-	-	-
℄ W. BRG. PIER 2 EB	41+66.20	28.85	602.65	602.67
℄ PIER 2 EB	41+68.45	28.85	602.67	602.69

NOTES:

1. All Elevations and Offsets are in feet.
2. Offsets are measured with respect to the I-80 EB PGL. Negative offsets are left and positive are right of the PGL.

NORTH EDGE OF SOUTH LANE - EB

Location	Station	Offset	Theoretical Grade Elevations	Theoretical Grade Elevations Adjusted for Dead Load Deflection and Grinding
BK. W. ABUT. EB	37+93.13	36.00	594.91	594.93
℄ EXP. JT.	37+95.44	36.00	594.99	595.01
℄ BRG. W. ABUT. EB	37+97.22	36.00	595.04	595.06
1A	38+07.22	36.00	595.35	595.42
1B	38+17.22	36.00	595.65	595.77
1C	38+27.22	36.00	595.95	596.11
1D	38+37.22	36.00	596.24	596.44
1E	38+47.22	36.00	596.53	596.75
1F	38+57.22	36.00	596.82	597.05
1G	38+67.22	36.00	597.10	597.34
1H	38+77.22	36.00	597.38	597.62
1I	38+87.22	36.00	597.65	597.88
1J	38+97.22	36.00	597.92	598.13
1K	39+07.22	36.00	598.19	598.37
1L	39+17.22	36.00	598.45	598.60
1M	39+27.22	36.00	598.71	598.82
1N	39+37.22	36.00	598.94	599.03
1O	39+47.22	36.00	599.17	599.22
1P	39+57.22	36.00	599.37	599.41
1Q	39+67.22	36.00	599.56	599.59
℄ BRG. PIER 1 EB	39+78.97	36.00	599.78	599.80
1R	39+88.97	36.00	599.97	600.00
1S	39+98.97	36.00	600.14	600.19
1T	40+08.97	36.00	600.32	600.39
1U	40+18.97	36.00	600.49	600.59
1V	40+28.97	36.00	600.66	600.79
1W	40+38.97	36.00	600.82	600.99
1X	40+48.97	36.00	600.98	601.18
1Y	40+58.97	36.00	601.13	601.37
1Z	40+68.97	36.00	601.28	601.54
1AA	40+78.97	36.00	601.43	601.70
1AB	40+88.97	36.00	601.57	601.86
1AC	40+98.97	36.00	601.71	601.99
1AD	41+08.97	36.00	601.85	602.11
1AE	41+18.97	36.00	601.98	602.22
1AF	41+28.97	36.00	602.10	602.31
1AG	41+38.97	36.00	602.23	602.39
1AH	41+48.97	36.00	602.34	602.47
1AI	41+58.97	36.00	602.46	602.53
1AJ	-	-	-	-
℄ W. BRG. PIER 2 EB	41+66.20	36.00	602.54	602.56
℄ PIER 2 EB	41+68.45	36.00	602.56	602.58

GIRDER E6

Location	Station	Offset	Theoretical Grade Elevations	Theoretical Grade Elevations Adjusted for Dead Load Deflection and Grinding
BK. W. ABUT. EB	37+92.01	38.56	594.83	594.85
℄ EXP. JT.	37+94.33	38.56	594.90	594.92
℄ BRG. W. ABUT. EB	37+96.10	38.56	594.95	594.98
1A	38+06.10	38.56	595.26	595.33
1B	38+16.10	38.56	595.56	595.68
1C	38+26.10	38.56	595.86	596.02
1D	38+36.10	38.56	596.16	596.35
1E	38+46.10	38.56	596.45	596.67
1F	38+56.10	38.56	596.74	596.97
1G	38+66.10	38.56	597.02	597.26
1H	38+76.10	38.56	597.30	597.53
1I	38+86.10	38.56	597.57	597.80
1J	38+96.10	38.56	597.84	598.04
1K	39+06.10	38.56	598.11	598.29
1L	39+16.10	38.56	598.37	598.52
1M	39+26.10	38.56	598.63	598.74
1N	39+36.10	38.56	598.86	598.95
1O	39+46.10	38.56	599.09	599.15
1P	39+56.10	38.56	599.30	599.34
1Q	39+66.10	38.56	599.49	599.52
℄ BRG. PIER 1 EB	39+77.85	38.56	599.71	599.73
1R	39+87.85	38.56	599.89	599.93
1S	39+97.85	38.56	600.07	600.12
1T	40+07.85	38.56	600.25	600.32
1U	40+17.85	38.56	600.42	600.52
1V	40+27.85	38.56	600.59	600.72
1W	40+37.85	38.56	600.75	600.92
1X	40+47.85	38.56	600.91	601.11
1Y	40+57.85	38.56	601.06	601.30
1Z	40+67.85	38.56	601.21	601.47
1AA	40+77.85	38.56	601.36	601.64
1AB	40+87.85	38.56	601.50	601.79
1AC	40+97.85	38.56	601.64	601.92
1AD	41+07.85	38.56	601.78	602.05
1AE	41+17.85	38.56	601.91	602.15
1AF	41+27.85	38.56	602.04	602.25
1AG	41+37.85	38.56	602.16	602.33
1AH	41+47.85	38.56	602.28	602.40
1AI	41+57.85	38.56	602.39	602.46
1AJ	-	-	-	-
℄ W. BRG. PIER 2 EB	41+66.20	38.56	602.49	602.51
℄ PIER 2 EB	41+68.45	38.56	602.51	602.53

GIRDER E7

Location	Station	Offset	Theoretical Grade Elevations	Theoretical Grade Elevations Adjusted for Dead Load Deflection and Grinding
BK. W. ABUT. EB	37+87.79	48.27	594.50	594.52
℄ EXP. JT.	37+90.11	48.27	594.58	594.60
℄ BRG. W. ABUT. EB	37+91.88	48.27	594.63	594.65
1A	38+01.88	48.27	594.94	595.01
1B	38+11.88	48.27	595.24	595.36
1C	38+21.88	48.27	595.54	595.70
1D	38+31.88	48.27	595.84	596.03
1E	38+41.88	48.27	596.13	596.35
1F	38+51.88	48.27	596.42	596.65
1G	38+61.88	48.27	596.70	596.94
1H	38+71.88	48.27	596.99	597.22
1I	38+81.88	48.27	597.26	597.48
1J	38+91.88	48.27	597.53	597.73
1K	39+01.88	48.27	597.80	597.97
1L	39+11.88	48.27	598.07	598.21
1M	39+21.88	48.27	598.33	598.44
1N	39+31.88	48.27	598.57	598.65
1O	39+41.88	48.27	598.80	598.86
1P	39+51.88	48.27	599.02	599.06
1Q	39+61.88	48.27	599.22	599.24
℄ BRG. PIER 1 EB	39+73.63	48.27	599.44	599.46
1R	39+83.63	48.27	599.62	599.66
1S	39+93.63	48.27	599.80	599.86
1T	40+03.63	48.27	599.98	600.06
1U	40+13.63	48.27	600.15	600.27
1V	40+23.63	48.27	600.32	600.47
1W	40+33.63	48.27	600.49	600.68
1X	40+43.63	48.27	600.65	600.88
1Y	40+53.63	48.27	600.80	601.07
1Z	40+63.63	48.27	600.96	601.25
1AA	40+73.63	48.27	601.11	601.41
1AB	40+83.63	48.27	601.25	601.57
1AC	40+93.63	48.27	601.39	601.71
1AD	41+03.63	48.27	601.53	601.83
1AE	41+13.63	48.27	601.66	601.94
1AF	41+23.63	48.27	601.79	602.04
1AG	41+33.63	48.27	601.91	602.12
1AH	41+43.63	48.27	602.04	602.19
1AI	41+53.63	48.27	602.15	602.25
1AJ	-	-	-	-
℄ W. BRG. PIER 2 EB	41+66.20	48.27	602.29	602.31
℄ PIER 2 EB	41+68.45	48.27	602.32	602.34

NOTES:

1. All Elevations and Offsets are in feet.
2. Offsets are measured with respect to the I-80 EB PGL. Negative offsets are left and positive are right of the PGL.

PROP. BL CENTER RAMP B

Location	Station	Offset	Theoretical Grade Elevations	Theoretical Grade Elevations Adjusted for Dead Load Deflection and Grinding
BK. W. ABUT. EB	37+86.78	50.60	594.43	594.45
℄ EXP. JT.	37+89.12	50.55	594.50	594.52
℄ BRG. W. ABUT. EB	37+90.91	50.52	594.56	594.58
1A	38+00.90	50.32	594.87	594.94
1B	38+10.90	50.12	595.18	595.29
1C	38+20.90	49.92	595.48	595.64
1D	38+30.90	49.72	595.78	595.97
1E	38+40.90	49.52	596.08	596.30
1F	38+50.89	49.32	596.37	596.60
1G	38+60.89	49.12	596.66	596.90
1H	38+70.89	48.92	596.94	597.18
1I	38+80.89	48.72	597.23	597.45
1J	38+90.89	48.52	597.50	597.70
1K	39+00.88	48.32	597.78	597.95
1L	39+10.88	48.12	598.04	598.18
1M	-	-	-	-
1N	-	-	-	-
1O	-	-	-	-
1P	-	-	-	-
1Q	-	-	-	-
℄ BRG. PIER 1 EB	-	-	-	-
1R	-	-	-	-
1S	-	-	-	-
1T	-	-	-	-
1U	-	-	-	-
1V	-	-	-	-
1W	-	-	-	-
1X	-	-	-	-
1Y	-	-	-	-
1Z	-	-	-	-
1AA	-	-	-	-
1AB	-	-	-	-
1AC	-	-	-	-
1AD	-	-	-	-
1AE	-	-	-	-
1AF	-	-	-	-
1AG	-	-	-	-
1AH	-	-	-	-
1AI	-	-	-	-
1AJ	-	-	-	-
℄ W. BRG. PIER 2 EB	-	-	-	-
℄ PIER 2 EB	-	-	-	-

GIRDER E8

Location	Station	Offset	Theoretical Grade Elevations	Theoretical Grade Elevations Adjusted for Dead Load Deflection and Grinding
BK. W. ABUT. EB	37+83.57	57.98	594.18	594.20
℄ EXP. JT.	37+85.89	57.98	594.25	594.27
℄ BRG. W. ABUT. EB	37+87.66	57.98	594.31	594.33
1A	37+97.66	57.98	594.61	594.68
1B	38+07.66	57.98	594.92	595.03
1C	38+17.66	57.98	595.22	595.37
1D	38+27.66	57.98	595.52	595.70
1E	38+37.66	57.98	595.81	596.02
1F	38+47.66	57.98	596.10	596.32
1G	38+57.66	57.98	596.39	596.61
1H	38+67.66	57.98	596.67	596.89
1I	38+77.66	57.98	596.95	597.16
1J	38+87.66	57.98	597.23	597.41
1K	38+97.66	57.98	597.50	597.65
1L	39+07.66	57.98	597.76	597.89
1M	39+17.66	57.98	598.02	598.12
1N	39+27.66	57.98	598.28	598.35
1O	39+37.66	57.98	598.51	598.56
1P	39+47.66	57.98	598.74	598.77
1Q	39+57.66	57.98	598.94	598.96
℄ BRG. PIER 1 EB	39+69.41	57.98	599.16	599.19
1R	39+79.41	57.98	599.35	599.39
1S	39+89.41	57.98	599.53	599.59
1T	39+99.41	57.98	599.71	599.80
1U	40+09.41	57.98	599.89	600.01
1V	40+19.41	57.98	600.06	600.22
1W	40+29.41	57.98	600.22	600.43
1X	40+39.41	57.98	600.39	600.63
1Y	40+49.41	57.98	600.54	600.83
1Z	40+59.41	57.98	600.70	601.01
1AA	40+69.41	57.98	600.85	601.19
1AB	40+79.41	57.98	601.00	601.35
1AC	40+89.41	57.98	601.14	601.49
1AD	40+99.41	57.98	601.28	601.62
1AE	41+09.41	57.98	601.41	601.73
1AF	41+19.41	57.98	601.54	601.83
1AG	41+29.41	57.98	601.67	601.91
1AH	41+39.41	57.98	601.79	601.98
1AI	41+49.41	57.98	601.91	602.04
1AJ	41+59.41	57.98	602.02	602.09
℄ W. BRG. PIER 2 EB	41+66.20	57.98	602.10	602.12
℄ PIER 2 EB	41+68.45	57.98	602.12	602.14

INSIDE FACE OF SOUTH PARAPET - EB

Location	Station	Offset	Theoretical Grade Elevations	Theoretical Grade Elevations Adjusted for Dead Load Deflection and Grinding
BK. W. ABUT. EB	37+82.69	60.00	594.11	594.13
℄ EXP. JT.	37+85.01	60.00	594.18	594.20
℄ BRG. W. ABUT. EB	37+86.78	60.00	594.24	594.26
1A	37+96.78	60.00	594.55	594.61
1B	38+06.78	60.00	594.85	594.96
1C	38+16.78	60.00	595.16	595.30
1D	38+26.78	60.00	595.45	595.63
1E	38+36.78	60.00	595.75	595.95
1F	38+46.78	60.00	596.04	596.26
1G	38+56.78	60.00	596.33	596.55
1H	38+66.78	60.00	596.61	596.82
1I	38+76.78	60.00	596.89	597.09
1J	38+86.78	60.00	597.16	597.34
1K	38+96.78	60.00	597.43	597.59
1L	39+06.78	60.00	597.70	597.83
1M	39+16.78	60.00	597.96	598.06
1N	39+26.78	60.00	598.22	598.29
1O	39+36.78	60.00	598.45	598.50
1P	39+46.78	60.00	598.68	598.71
1Q	39+56.78	60.00	598.88	598.91
℄ BRG. PIER 1 EB	39+68.53	60.00	599.11	599.13
1R	39+78.53	60.00	599.29	599.33
1S	39+88.53	60.00	599.48	599.53
1T	39+98.53	60.00	599.66	599.75
1U	40+08.53	60.00	599.83	599.95
1V	40+18.53	60.00	600.00	600.17
1W	40+28.53	60.00	600.17	600.38
1X	40+38.53	60.00	600.33	600.58
1Y	40+48.53	60.00	600.49	600.78
1Z	40+58.53	60.00	600.65	600.96
1AA	40+68.53	60.00	600.80	601.14
1AB	40+78.53	60.00	600.94	601.29
1AC	40+88.53	60.00	601.09	601.44
1AD	40+98.53	60.00	601.22	601.57
1AE	41+08.53	60.00	601.36	601.68
1AF	41+18.53	60.00	601.49	601.78
1AG	41+28.53	60.00	601.62	601.86
1AH	41+38.53	60.00	601.74	601.93
1AI	41+48.53	60.00	601.86	601.99
1AJ	41+58.53	60.00	601.97	602.04
℄ W. BRG. PIER 2 EB	41+66.20	60.00	602.06	602.08
℄ PIER 2 EB	41+68.45	60.00	602.08	602.10

NOTES:

1. All Elevations and Offsets are in feet.
2. Offsets are measured with respect to the I-80 EB PGL. Negative offsets are left and positive are right of the PGL.

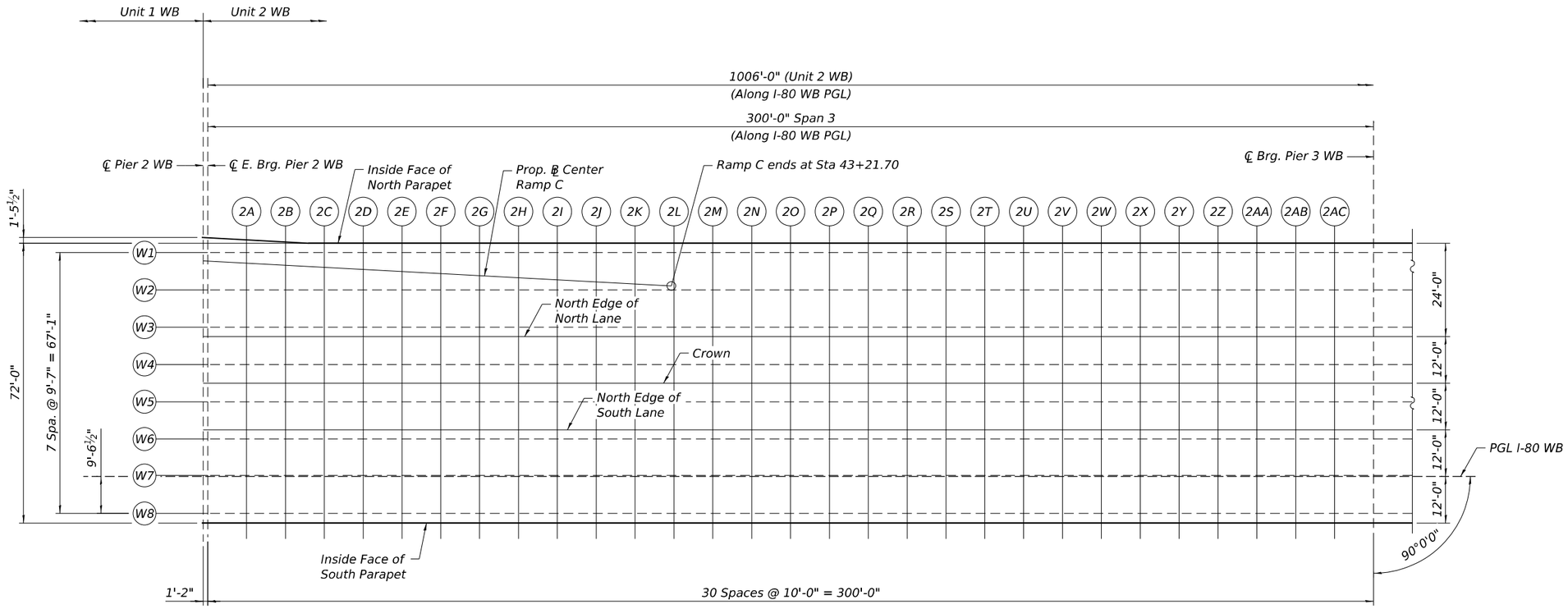

PARTIAL PLAN - UNIT 2 WB

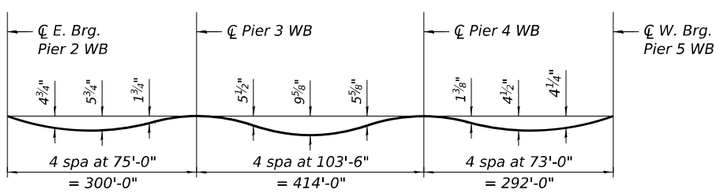

DEAD LOAD DEFLECTION DIAGRAM

(Includes weight of concrete only.) See Note 5.

Note:
The above deflections are not to be used in the field if the engineer is working from the grade elevations adjusted for dead load deflections and grinding as shown on sheets S-44 to S-53.

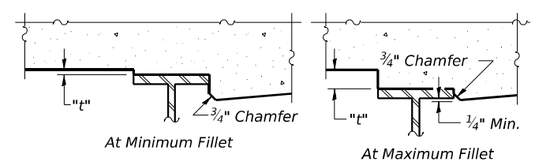

To determine "t": After all structural steel has been erected, elevations of the top flanges of the beams shall be taken at intervals shown. These elevations subtracted from the "Theoretical Grade Elevations Adjusted for Dead Load Deflection and Grinding" shown on sheets S-44 to S-53, minus the initial slab thickness prior to grinding, equals the fillet heights "t" above top flange of beams.

The slab is to be ground after curing to achieve smoothness, but the slab is not to be ground to elevations below the "Theoretical Grade Elevations" shown on sheets S-44 to S-53. For grinding the deck, see Special Provisions.

FILLET HEIGHTS

NOTES:

1. The dead load deflections shown in the diagram and used for fillet height determination are based on the Deck Pouring Sequence shown on sheet S-124 .
2. If the Contractor elects to use a different pour placement/hardening schedule, then the deflections and fillet heights shall be re-calculated.
3. The cost of re-calculating deflections and adjusting fillet heights shall be included in the cost of Concrete Superstructure.
4. Up to 1/4 inch to be ground off the bridge deck and the bridge approach slabs. The Profile Grade shows the final grade after grinding.
5. The dead load deflections used to compute the "Theoretical Grade Elevations Adjusted for Dead Load Deflections and Grinding" shown on sheets S-44 to S-53 include the weight of deck concrete and the parapets. The net effects of temporary formwork, assumed to be 10 PSF of deck surface area, placed on the noncomposite structure and later removed from the composite structure are included in these theoretical deflections.

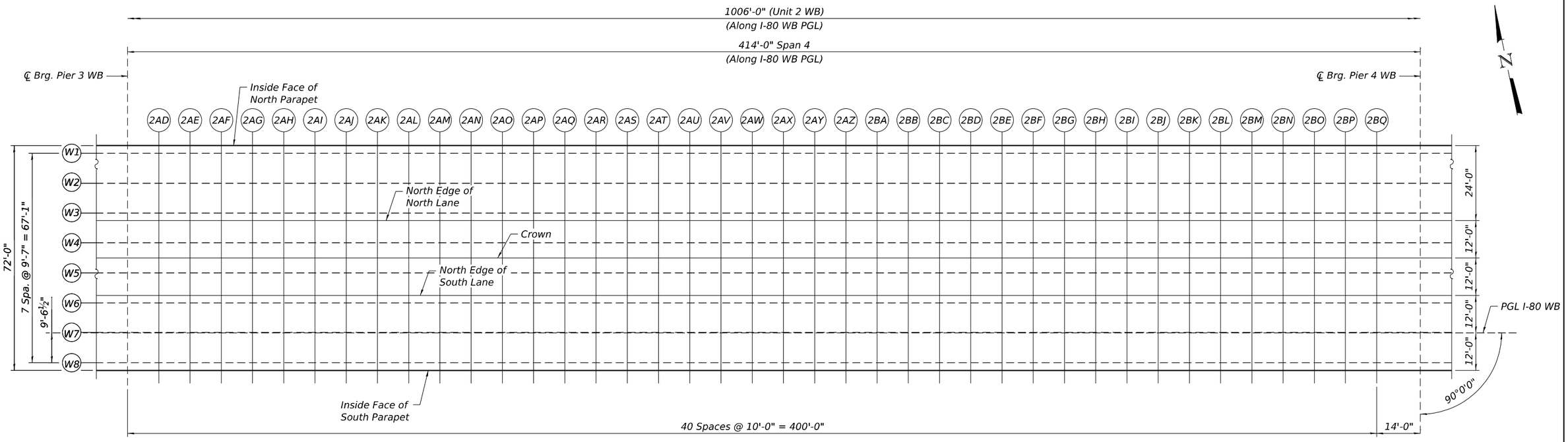

PARTIAL PLAN - UNIT 2 WB

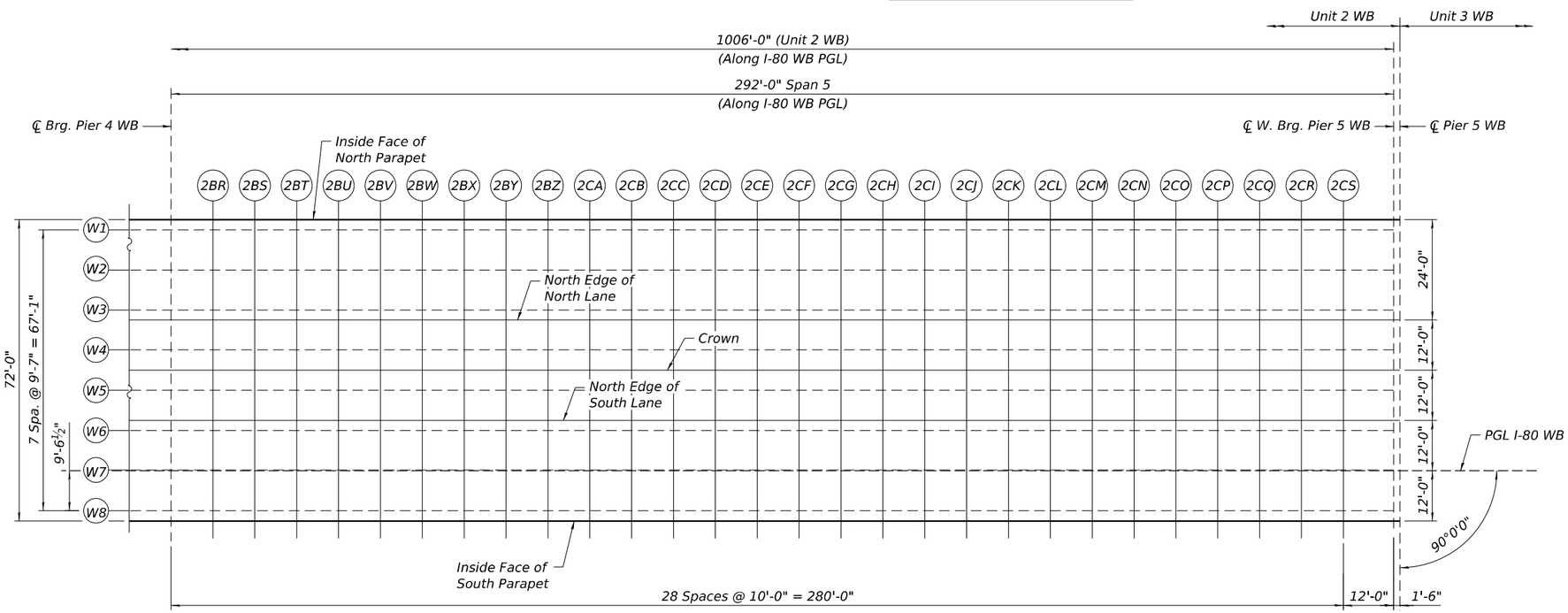

PARTIAL PLAN - UNIT 2 WB

MODEL: Default
FILE NAME: pw://transystems-pw.bentley.com:transyscorp-pw1-hosted/Documents/Projects_2018/CH401/401180022/03-WSP/CAD/62R23-RB-1/Sheets/Structural/0998309-62R23-S215-DEW202.dgn

WSP USA Inc.
30 N. LASALLE STREET
SUITE 4200
CHICAGO, IL 60602
TEL: (312) 782-8150
FAX: (312) 782-1684

USER NAME = USSJ696614	DESIGNED - LAS	REVISED -	
	CHECKED - PJL	REVISED -	
PLOT SCALE = 32:0 ':" / in.	DRAWN - GM	REVISED -	
PLOT DATE = 11/5/2025	CHECKED - LAS	REVISED -	

STATE OF ILLINOIS
DEPARTMENT OF TRANSPORTATION

TOP OF SLAB ELEVATION PLAN 2 - UNIT 2 WB
STRUCTURE NUMBER 099-8309 WB AND 099-8325 EB

SHEET S-43 OF S-333 SHEETS

F.A.I RTE.	SECTION	COUNTY	TOTAL SHEETS	SHEET NO.
I-80	FAI 80 21 STRUCTURE 2	WILL	1230	624
		CONTRACT NO. 62R23		
	ILLINOIS	FED. AID PROJECT		

INSIDE FACE OF NORTH PARAPET - WB

Location	Station	Offset	Theoretical Grade Elevations	Theoretical Grade Elevations Adjusted For Dead Load Deflection and Grinding
℄ PIER 2 WB	42+01.21	-61.44	602.39	602.41
℄ E BRG PIER 2 WB	42+02.38	-61.38	602.40	602.42
2A	42+12.38	-60.85	602.51	602.59
2B	42+22.38	-60.31	602.61	602.76
2C	42+32.38	-60.00	602.70	602.91
2D	42+42.38	-60.00	602.78	603.05
2E	42+52.38	-60.00	602.86	603.18
2F	42+62.38	-60.00	602.93	603.30
2G	42+72.38	-60.00	603.00	603.40
2H	42+82.38	-60.00	603.06	603.50
2I	42+92.38	-60.00	603.13	603.59
2J	43+02.38	-60.00	603.18	603.66
2K	43+12.38	-60.00	603.24	603.73
2L	43+22.38	-60.00	603.29	603.78
2M	43+32.38	-60.00	603.33	603.82
2N	43+42.38	-60.00	603.37	603.85
2O	43+52.38	-60.00	603.41	603.87
2P	43+62.38	-60.00	603.44	603.88
2Q	43+72.38	-60.00	603.47	603.88
2R	43+82.38	-60.00	603.50	603.87
2S	43+92.38	-60.00	603.52	603.85
2T	44+02.38	-60.00	603.54	603.82
2U	44+12.38	-60.00	603.55	603.79
2V	44+22.38	-60.00	603.56	603.75
2W	44+32.38	-60.00	603.56	603.71
2X	44+42.38	-60.00	603.57	603.68
2Y	44+52.38	-60.00	603.56	603.64
2Z	44+62.38	-60.00	603.56	603.61
2AA	44+72.38	-60.00	603.55	603.58
2AB	44+82.38	-60.00	603.53	603.55
2AC	44+92.38	-60.00	603.51	603.53
℄ BRG. PIER 3 WB	45+02.38	-60.00	603.49	603.51
2AD	45+12.38	-60.00	603.46	603.50
2AE	45+22.38	-60.00	603.43	603.49
2AF	45+32.38	-60.00	603.40	603.49
2AG	45+42.38	-60.00	603.36	603.49
2AH	45+52.38	-60.00	603.32	603.49
2AI	45+62.38	-60.00	603.27	603.49
2AJ	45+72.38	-60.00	603.22	603.50
2AK	45+82.38	-60.00	603.16	603.50
2AL	45+92.38	-60.00	603.11	603.50
2AM	46+02.38	-60.00	603.04	603.50
2AN	46+12.38	-60.00	602.98	603.49
2AO	46+22.38	-60.00	602.91	603.48
2AP	46+32.38	-60.00	602.83	603.45
2AQ	46+42.38	-60.00	602.75	603.42
2AR	46+52.38	-60.00	602.67	603.38
2AS	46+62.38	-60.00	602.58	603.32
2AT	46+72.38	-60.00	602.49	603.26
2AU	46+82.38	-60.00	602.40	603.19
2AV	46+92.38	-60.00	602.30	603.11
2AW	47+02.38	-60.00	602.20	603.01
2AX	47+12.38	-60.00	602.09	602.91
2AY	47+22.38	-60.00	601.98	602.79
2AZ	47+32.38	-60.00	601.86	602.67

INSIDE FACE OF NORTH PARAPET - WB (CONT.)

Location	Station	Offset	Theoretical Grade Elevations	Theoretical Grade Elevations Adjusted For Dead Load Deflection and Grinding
2BA	47+42.38	-60.00	601.75	602.53
2BB	47+52.38	-60.00	601.62	602.38
2BC	47+62.38	-60.00	601.50	602.23
2BD	47+72.38	-60.00	601.37	602.06
2BE	47+82.38	-60.00	601.23	601.88
2BF	47+92.38	-60.00	601.09	601.69
2BG	48+02.38	-60.00	600.95	601.50
2BH	48+12.38	-60.00	600.80	601.29
2BI	48+22.38	-60.00	600.65	601.08
2BJ	48+32.38	-60.00	600.50	600.87
2BK	48+42.38	-60.00	600.34	600.65
2BL	48+52.38	-60.00	600.18	600.43
2BM	48+62.38	-60.00	600.01	600.21
2BN	48+72.38	-60.00	599.84	599.99
2BO	48+82.38	-60.00	599.66	599.77
2BP	48+92.38	-60.00	599.49	599.56
2BQ	49+02.38	-60.00	599.30	599.35
℄ BRG. PIER 4 WB	49+16.38	-60.00	599.04	599.06
2BR	49+26.38	-60.00	598.85	598.86
2BS	49+36.38	-60.00	598.65	598.67
2BT	49+46.38	-60.00	598.45	598.48
2BU	49+56.38	-60.00	598.25	598.29
2BV	49+66.38	-60.00	598.04	598.10
2BW	49+76.38	-60.00	597.83	597.92
2BX	49+86.38	-60.00	597.61	597.74
2BY	49+96.38	-60.00	597.39	597.56
2BZ	50+06.38	-60.00	597.17	597.37
2CA	50+16.38	-60.00	596.94	597.19
2CB	50+26.38	-60.00	596.71	596.99
2CC	50+36.38	-60.00	596.47	596.79
2CD	50+46.38	-60.00	596.23	596.59
2CE	50+56.38	-60.00	595.98	596.37
2CF	50+66.38	-60.00	595.74	596.14
2CG	50+76.38	-60.00	595.48	595.91
2CH	50+86.38	-60.00	595.23	595.66
2CI	50+96.38	-60.00	594.97	595.40
2CJ	51+06.38	-60.00	594.70	595.13
2CK	51+16.38	-60.00	594.43	594.85
2CL	51+26.38	-60.00	594.16	594.56
2CM	51+36.38	-60.00	593.89	594.25
2CN	51+46.38	-60.00	593.61	593.94
2CO	51+56.38	-60.00	593.32	593.62
2CP	51+66.38	-60.00	593.03	593.28
2CQ	51+76.38	-60.00	592.74	592.94
2CR	51+86.38	-60.00	592.45	592.59
2CS	51+96.38	-60.00	592.14	592.24
℄ W BRG PIER 5 WB	52+08.38	-60.00	591.78	591.80
℄ PIER 5 WB	52+09.88	-60.00	591.73	591.75

GIRDER W1

Location	Station	Offset	Theoretical Grade Elevations	Theoretical Grade Elevations Adjusted For Dead Load Deflection and Grinding
℄ PIER 2 WB	42+01.21	-57.54	602.47	602.49
℄ E BRG PIER 2 WB	42+02.38	-57.54	602.48	602.50
2A	42+12.38	-57.54	602.57	602.66
2B	42+22.38	-57.54	602.66	602.81
2C	42+32.38	-57.54	602.75	602.96
2D	42+42.38	-57.54	602.83	603.10
2E	42+52.38	-57.54	602.91	603.22
2F	42+62.38	-57.54	602.98	603.34
2G	42+72.38	-57.54	603.05	603.45
2H	42+82.38	-57.54	603.11	603.55
2I	42+92.38	-57.54	603.18	603.64
2J	43+02.38	-57.54	603.23	603.71
2K	43+12.38	-57.54	603.29	603.78
2L	43+22.38	-57.54	603.34	603.83
2M	43+32.38	-57.54	603.38	603.87
2N	43+42.38	-57.54	603.42	603.90
2O	43+52.38	-57.54	603.46	603.92
2P	43+62.38	-57.54	603.49	603.93
2Q	43+72.38	-57.54	603.52	603.93
2R	43+82.38	-57.54	603.55	603.92
2S	43+92.38	-57.54	603.57	603.90
2T	44+02.38	-57.54	603.59	603.87
2U	44+12.38	-57.54	603.60	603.84
2V	44+22.38	-57.54	603.61	603.80
2W	44+32.38	-57.54	603.61	603.76
2X	44+42.38	-57.54	603.61	603.73
2Y	44+52.38	-57.54	603.61	603.69
2Z	44+62.38	-57.54	603.61	603.66
2AA	44+72.38	-57.54	603.59	603.63
2AB	44+82.38	-57.54	603.58	603.60
2AC	44+92.38	-57.54	603.56	603.58
℄ BRG. PIER 3 WB	45+02.38	-57.54	603.54	603.56
2AD	45+12.38	-57.54	603.51	603.55
2AE	45+22.38	-57.54	603.48	603.54
2AF	45+32.38	-57.54	603.45	603.54
2AG	45+42.38	-57.54	603.41	603.53
2AH	45+52.38	-57.54	603.37	603.54
2AI	45+62.38	-57.54	603.32	603.54
2AJ	45+72.38	-57.54	603.27	603.55
2AK	45+82.38	-57.54	603.21	603.55
2AL	45+92.38	-57.54	603.15	603.55
2AM	46+02.38	-57.54	603.09	603.55
2AN	46+12.38	-57.54	603.03	603.54
2AO	46+22.38	-57.54	602.95	603.53
2AP	46+32.38	-57.54	602.88	603.50
2AQ	46+42.38	-57.54	602.80	603.47
2AR	46+52.38	-57.54	602.72	603.43
2AS	46+62.38	-57.54	602.63	603.37
2AT	46+72.38	-57.54	602.54	603.31
2AU	46+82.38	-57.54	602.45	603.24
2AV	46+92.38	-57.54	602.35	603.16
2AW	47+02.38	-57.54	602.25	603.06
2AX	47+12.38	-57.54	602.14	602.96
2AY	47+22.38	-57.54	602.03	602.84
2AZ	47+32.38	-57.54	601.91	602.72

NOTES:

1. All Elevations and Offsets are in feet.
2. Offsets are measured with respect to the I-80 WB PGL. Negative offsets are left and positive are right of the PGL.

GIRDER W1 (CONT.)

Location	Station	Offset	Theoretical Grade Elevations	Theoretical Grade Elevations Adjusted For Dead Load Deflection and Grinding
2BA	47+42.38	-57.54	601.79	602.58
2BB	47+52.38	-57.54	601.67	602.43
2BC	47+62.38	-57.54	601.55	602.27
2BD	47+72.38	-57.54	601.41	602.11
2BE	47+82.38	-57.54	601.28	601.93
2BF	47+92.38	-57.54	601.14	601.74
2BG	48+02.38	-57.54	601.00	601.55
2BH	48+12.38	-57.54	600.85	601.34
2BI	48+22.38	-57.54	600.70	601.13
2BJ	48+32.38	-57.54	600.55	600.92
2BK	48+42.38	-57.54	600.39	600.70
2BL	48+52.38	-57.54	600.23	600.48
2BM	48+62.38	-57.54	600.06	600.26
2BN	48+72.38	-57.54	599.89	600.04
2BO	48+82.38	-57.54	599.71	599.82
2BP	48+92.38	-57.54	599.53	599.61
2BQ	49+02.38	-57.54	599.35	599.40
℄ BRG. PIER 4 WB	49+16.38	-57.54	599.09	599.11
2BR	49+26.38	-57.54	598.90	598.91
2BS	49+36.38	-57.54	598.70	598.72
2BT	49+46.38	-57.54	598.50	598.52
2BU	49+56.38	-57.54	598.30	598.34
2BV	49+66.38	-57.54	598.09	598.15
2BW	49+76.38	-57.54	597.88	597.97
2BX	49+86.38	-57.54	597.66	597.79
2BY	49+96.38	-57.54	597.44	597.61
2BZ	50+06.38	-57.54	597.21	597.42
2CA	50+16.38	-57.54	596.99	597.24
2CB	50+26.38	-57.54	596.75	597.04
2CC	50+36.38	-57.54	596.52	596.84
2CD	50+46.38	-57.54	596.28	596.64
2CE	50+56.38	-57.54	596.03	596.42
2CF	50+66.38	-57.54	595.79	596.19
2CG	50+76.38	-57.54	595.53	595.95
2CH	50+86.38	-57.54	595.28	595.71
2CI	50+96.38	-57.54	595.02	595.45
2CJ	51+06.38	-57.54	594.75	595.18
2CK	51+16.38	-57.54	594.48	594.90
2CL	51+26.38	-57.54	594.21	594.61
2CM	51+36.38	-57.54	593.94	594.30
2CN	51+46.38	-57.54	593.66	593.99
2CO	51+56.38	-57.54	593.37	593.67
2CP	51+66.38	-57.54	593.08	593.33
2CQ	51+76.38	-57.54	592.79	592.99
2CR	51+86.38	-57.54	592.49	592.64
2CS	51+96.38	-57.54	592.19	592.29
℄ W BRG PIER 5 WB	52+08.38	-57.54	591.83	591.85
℄ PIER 5 WB	52+09.88	-57.54	591.78	591.80

PROP. ℄ CENTER RAMP C

Location	Station	Offset	Theoretical Grade Elevations	Theoretical Grade Elevations Adjusted For Dead Load Deflection and Grinding
℄ PIER 2 WB	42+01.21	-55.44	602.51	602.53
℄ E BRG PIER 2 WB	42+02.38	-55.37	602.52	602.54
2A	42+12.37	-54.84	602.63	602.71
2B	42+22.35	-54.31	602.73	602.88
2C	42+32.34	-53.77	602.82	603.03
2D	42+42.32	-53.24	602.91	603.18
2E	42+52.31	-52.71	603.00	603.32
2F	42+62.29	-52.17	603.09	603.45
2G	42+72.28	-51.64	603.17	603.57
2H	42+82.27	-51.11	603.24	603.68
2I	42+92.25	-50.57	603.31	603.78
2J	43+02.24	-50.04	603.38	603.86
2K	43+12.22	-49.51	603.45	603.94
2L	-	-	-	-
2M	-	-	-	-
2N	-	-	-	-
2O	-	-	-	-
2P	-	-	-	-
2Q	-	-	-	-
2R	-	-	-	-
2S	-	-	-	-
2T	-	-	-	-
2U	-	-	-	-
2V	-	-	-	-
2W	-	-	-	-
2X	-	-	-	-
2Y	-	-	-	-
2Z	-	-	-	-
2AA	-	-	-	-
2AB	-	-	-	-
2AC	-	-	-	-
℄ BRG. PIER 3 WB	-	-	-	-
2AD	-	-	-	-
2AE	-	-	-	-
2AF	-	-	-	-
2AG	-	-	-	-
2AH	-	-	-	-
2AI	-	-	-	-
2AJ	-	-	-	-
2AK	-	-	-	-
2AL	-	-	-	-
2AM	-	-	-	-
2AN	-	-	-	-
2AO	-	-	-	-
2AP	-	-	-	-
2AQ	-	-	-	-
2AR	-	-	-	-
2AS	-	-	-	-
2AT	-	-	-	-
2AU	-	-	-	-
2AV	-	-	-	-
2AW	-	-	-	-
2AX	-	-	-	-
2AY	-	-	-	-
2AZ	-	-	-	-

PROP. ℄ CENTER RAMP C (CONT.)

Location	Station	Offset	Theoretical Grade Elevations	Theoretical Grade Elevations Adjusted For Dead Load Deflection and Grinding
2BA	-	-	-	-
2BB	-	-	-	-
2BC	-	-	-	-
2BD	-	-	-	-
2BE	-	-	-	-
2BF	-	-	-	-
2BG	-	-	-	-
2BH	-	-	-	-
2BI	-	-	-	-
2BJ	-	-	-	-
2BK	-	-	-	-
2BL	-	-	-	-
2BM	-	-	-	-
2BN	-	-	-	-
2BO	-	-	-	-
2BP	-	-	-	-
2BQ	-	-	-	-
℄ BRG. PIER 4 WB	-	-	-	-
2BR	-	-	-	-
2BS	-	-	-	-
2BT	-	-	-	-
2BU	-	-	-	-
2BV	-	-	-	-
2BW	-	-	-	-
2BX	-	-	-	-
2BY	-	-	-	-
2BZ	-	-	-	-
2CA	-	-	-	-
2CB	-	-	-	-
2CC	-	-	-	-
2CD	-	-	-	-
2CE	-	-	-	-
2CF	-	-	-	-
2CG	-	-	-	-
2CH	-	-	-	-
2CI	-	-	-	-
2CJ	-	-	-	-
2CK	-	-	-	-
2CL	-	-	-	-
2CM	-	-	-	-
2CN	-	-	-	-
2CO	-	-	-	-
2CP	-	-	-	-
2CQ	-	-	-	-
2CR	-	-	-	-
2CS	-	-	-	-
℄ W BRG PIER 5 WB	-	-	-	-
℄ PIER 5 WB	-	-	-	-

NOTES:

1. All Elevations and Offsets are in feet.
2. Offsets are measured with respect to the I-80 WB PGL. Negative offsets are left and positive are right of the PGL.

GIRDER W2

Location	Station	Offset	Theoretical Grade Elevations	Theoretical Grade Elevations Adjusted For Dead Load Deflection and Grinding
℄ PIER 2 WB	42+01.21	-47.96	602.66	602.68
℄ E BRG PIER 2 WB	42+02.38	-47.96	602.67	602.69
2A	42+12.38	-47.96	602.76	602.85
2B	42+22.38	-47.96	602.85	603.00
2C	42+32.38	-47.96	602.94	603.15
2D	42+42.38	-47.96	603.02	603.29
2E	42+52.38	-47.96	603.10	603.42
2F	42+62.38	-47.96	603.17	603.54
2G	42+72.38	-47.96	603.24	603.65
2H	42+82.38	-47.96	603.31	603.74
2I	42+92.38	-47.96	603.37	603.83
2J	43+02.38	-47.96	603.42	603.91
2K	43+12.38	-47.96	603.48	603.97
2L	43+22.38	-47.96	603.53	604.02
2M	43+32.38	-47.96	603.57	604.06
2N	43+42.38	-47.96	603.61	604.09
2O	43+52.38	-47.96	603.65	604.11
2P	43+62.38	-47.96	603.68	604.12
2Q	43+72.38	-47.96	603.71	604.12
2R	43+82.38	-47.96	603.74	604.11
2S	43+92.38	-47.96	603.76	604.09
2T	44+02.38	-47.96	603.78	604.06
2U	44+12.38	-47.96	603.79	604.03
2V	44+22.38	-47.96	603.80	603.99
2W	44+32.38	-47.96	603.81	603.96
2X	44+42.38	-47.96	603.81	603.92
2Y	44+52.38	-47.96	603.80	603.88
2Z	44+62.38	-47.96	603.80	603.85
2AA	44+72.38	-47.96	603.79	603.82
2AB	44+82.38	-47.96	603.77	603.79
2AC	44+92.38	-47.96	603.75	603.77
℄ BRG. PIER 3 WB	45+02.38	-47.96	603.73	603.75
2AD	45+12.38	-47.96	603.70	603.74
2AE	45+22.38	-47.96	603.67	603.73
2AF	45+32.38	-47.96	603.64	603.73
2AG	45+42.38	-47.96	603.60	603.73
2AH	45+52.38	-47.96	603.56	603.73
2AI	45+62.38	-47.96	603.51	603.73
2AJ	45+72.38	-47.96	603.46	603.74
2AK	45+82.38	-47.96	603.40	603.74
2AL	45+92.38	-47.96	603.35	603.74
2AM	46+02.38	-47.96	603.28	603.74
2AN	46+12.38	-47.96	603.22	603.73
2AO	46+22.38	-47.96	603.15	603.72
2AP	46+32.38	-47.96	603.07	603.69
2AQ	46+42.38	-47.96	602.99	603.66
2AR	46+52.38	-47.96	602.91	603.62
2AS	46+62.38	-47.96	602.82	603.57
2AT	46+72.38	-47.96	602.73	603.50
2AU	46+82.38	-47.96	602.64	603.43
2AV	46+92.38	-47.96	602.54	603.35
2AW	47+02.38	-47.96	602.44	603.25
2AX	47+12.38	-47.96	602.33	603.15
2AY	47+22.38	-47.96	602.22	603.04
2AZ	47+32.38	-47.96	602.10	602.91

GIRDER W2 (CONT.)

Location	Station	Offset	Theoretical Grade Elevations	Theoretical Grade Elevations Adjusted For Dead Load Deflection and Grinding
2BA	47+42.38	-47.96	601.99	602.77
2BB	47+52.38	-47.96	601.86	602.62
2BC	47+62.38	-47.96	601.74	602.47
2BD	47+72.38	-47.96	601.61	602.30
2BE	47+82.38	-47.96	601.47	602.12
2BF	47+92.38	-47.96	601.33	601.93
2BG	48+02.38	-47.96	601.19	601.74
2BH	48+12.38	-47.96	601.04	601.54
2BI	48+22.38	-47.96	600.89	601.33
2BJ	48+32.38	-47.96	600.74	601.11
2BK	48+42.38	-47.96	600.58	600.89
2BL	48+52.38	-47.96	600.42	600.67
2BM	48+62.38	-47.96	600.25	600.45
2BN	48+72.38	-47.96	600.08	600.23
2BO	48+82.38	-47.96	599.90	600.02
2BP	48+92.38	-47.96	599.73	599.80
2BQ	49+02.38	-47.96	599.54	599.59
℄ BRG. PIER 4 WB	49+16.38	-47.96	599.28	599.30
2BR	49+26.38	-47.96	599.09	599.10
2BS	49+36.38	-47.96	598.89	598.91
2BT	49+46.38	-47.96	598.69	598.72
2BU	49+56.38	-47.96	598.49	598.53
2BV	49+66.38	-47.96	598.28	598.34
2BW	49+76.38	-47.96	598.07	598.16
2BX	49+86.38	-47.96	597.85	597.98
2BY	49+96.38	-47.96	597.63	597.80
2BZ	50+06.38	-47.96	597.41	597.61
2CA	50+16.38	-47.96	597.18	597.43
2CB	50+26.38	-47.96	596.95	597.23
2CC	50+36.38	-47.96	596.71	597.04
2CD	50+46.38	-47.96	596.47	596.83
2CE	50+56.38	-47.96	596.23	596.61
2CF	50+66.38	-47.96	595.98	596.38
2CG	50+76.38	-47.96	595.72	596.15
2CH	50+86.38	-47.96	595.47	595.90
2CI	50+96.38	-47.96	595.21	595.64
2CJ	51+06.38	-47.96	594.94	595.37
2CK	51+16.38	-47.96	594.68	595.09
2CL	51+26.38	-47.96	594.40	594.80
2CM	51+36.38	-47.96	594.13	594.49
2CN	51+46.38	-47.96	593.85	594.18
2CO	51+56.38	-47.96	593.56	593.86
2CP	51+66.38	-47.96	593.27	593.53
2CQ	51+76.38	-47.96	592.98	593.18
2CR	51+86.38	-47.96	592.69	592.83
2CS	51+96.38	-47.96	592.39	592.48
℄ W BRG PIER 5 WB	52+08.38	-47.96	592.02	592.04
℄ PIER 5 WB	52+09.88	-47.96	591.97	591.99

GIRDER W3

Location	Station	Offset	Theoretical Grade Elevations	Theoretical Grade Elevations Adjusted For Dead Load Deflection and Grinding
℄ PIER 2 WB	42+01.21	-38.38	602.85	602.87
℄ E BRG PIER 2 WB	42+02.38	-38.38	602.86	602.88
2A	42+12.38	-38.38	602.96	603.04
2B	42+22.38	-38.38	603.05	603.19
2C	42+32.38	-38.38	603.13	603.34
2D	42+42.38	-38.38	603.21	603.48
2E	42+52.38	-38.38	603.29	603.61
2F	42+62.38	-38.38	603.36	603.73
2G	42+72.38	-38.38	603.43	603.84
2H	42+82.38	-38.38	603.50	603.93
2I	42+92.38	-38.38	603.56	604.02
2J	43+02.38	-38.38	603.62	604.10
2K	43+12.38	-38.38	603.67	604.16
2L	43+22.38	-38.38	603.72	604.22
2M	43+32.38	-38.38	603.76	604.26
2N	43+42.38	-38.38	603.81	604.29
2O	43+52.38	-38.38	603.84	604.30
2P	43+62.38	-38.38	603.88	604.31
2Q	43+72.38	-38.38	603.90	604.31
2R	43+82.38	-38.38	603.93	604.30
2S	43+92.38	-38.38	603.95	604.28
2T	44+02.38	-38.38	603.97	604.25
2U	44+12.38	-38.38	603.98	604.22
2V	44+22.38	-38.38	603.99	604.19
2W	44+32.38	-38.38	604.00	604.15
2X	44+42.38	-38.38	604.00	604.11
2Y	44+52.38	-38.38	604.00	604.07
2Z	44+62.38	-38.38	603.99	604.04
2AA	44+72.38	-38.38	603.98	604.01
2AB	44+82.38	-38.38	603.96	603.99
2AC	44+92.38	-38.38	603.94	603.96
℄ BRG. PIER 3 WB	45+02.38	-38.38	603.92	603.94
2AD	45+12.38	-38.38	603.90	603.93
2AE	45+22.38	-38.38	603.86	603.92
2AF	45+32.38	-38.38	603.83	603.92
2AG	45+42.38	-38.38	603.79	603.92
2AH	45+52.38	-38.38	603.75	603.92
2AI	45+62.38	-38.38	603.70	603.92
2AJ	45+72.38	-38.38	603.65	603.93
2AK	45+82.38	-38.38	603.60	603.93
2AL	45+92.38	-38.38	603.54	603.93
2AM	46+02.38	-38.38	603.48	603.93
2AN	46+12.38	-38.38	603.41	603.92
2AO	46+22.38	-38.38	603.34	603.91
2AP	46+32.38	-38.38	603.26	603.88
2AQ	46+42.38	-38.38	603.18	603.85
2AR	46+52.38	-38.38	603.10	603.81
2AS	46+62.38	-38.38	603.02	603.76
2AT	46+72.38	-38.38	602.92	603.70
2AU	46+82.38	-38.38	602.83	603.62
2AV	46+92.38	-38.38	602.73	603.54
2AW	47+02.38	-38.38	602.63	603.45
2AX	47+12.38	-38.38	602.52	603.34
2AY	47+22.38	-38.38	602.41	603.23
2AZ	47+32.38	-38.38	602.30	603.10

NOTES:

1. All Elevations and Offsets are in feet.
2. Offsets are measured with respect to the I-80 WB PGL. Negative offsets are left and positive are right of the PGL.

GIRDER W3 (CONT.)

Location	Station	Offset	Theoretical Grade Elevations	Theoretical Grade Elevations Adjusted For Dead Load Deflection and Grinding
2BA	47+42.38	-38.38	602.18	602.96
2BB	47+52.38	-38.38	602.06	602.81
2BC	47+62.38	-38.38	601.93	602.66
2BD	47+72.38	-38.38	601.80	602.49
2BE	47+82.38	-38.38	601.66	602.31
2BF	47+92.38	-38.38	601.52	602.13
2BG	48+02.38	-38.38	601.38	601.93
2BH	48+12.38	-38.38	601.24	601.73
2BI	48+22.38	-38.38	601.08	601.52
2BJ	48+32.38	-38.38	600.93	601.30
2BK	48+42.38	-38.38	600.77	601.08
2BL	48+52.38	-38.38	600.61	600.86
2BM	48+62.38	-38.38	600.44	600.64
2BN	48+72.38	-38.38	600.27	600.42
2BO	48+82.38	-38.38	600.10	600.21
2BP	48+92.38	-38.38	599.92	599.99
2BQ	49+02.38	-38.38	599.74	599.78
℄ BRG. PIER 4 WB	49+16.38	-38.38	599.47	599.49
2BR	49+26.38	-38.38	599.28	599.30
2BS	49+36.38	-38.38	599.08	599.10
2BT	49+46.38	-38.38	598.88	598.91
2BU	49+56.38	-38.38	598.68	598.72
2BV	49+66.38	-38.38	598.47	598.53
2BW	49+76.38	-38.38	598.26	598.35
2BX	49+86.38	-38.38	598.04	598.17
2BY	49+96.38	-38.38	597.82	597.99
2BZ	50+06.38	-38.38	597.60	597.81
2CA	50+16.38	-38.38	597.37	597.62
2CB	50+26.38	-38.38	597.14	597.43
2CC	50+36.38	-38.38	596.90	597.23
2CD	50+46.38	-38.38	596.66	597.02
2CE	50+56.38	-38.38	596.42	596.80
2CF	50+66.38	-38.38	596.17	596.58
2CG	50+76.38	-38.38	595.92	596.34
2CH	50+86.38	-38.38	595.66	596.09
2CI	50+96.38	-38.38	595.40	595.83
2CJ	51+06.38	-38.38	595.14	595.56
2CK	51+16.38	-38.38	594.87	595.28
2CL	51+26.38	-38.38	594.60	594.99
2CM	51+36.38	-38.38	594.32	594.69
2CN	51+46.38	-38.38	594.04	594.37
2CO	51+56.38	-38.38	593.75	594.05
2CP	51+66.38	-38.38	593.47	593.72
2CQ	51+76.38	-38.38	593.17	593.37
2CR	51+86.38	-38.38	592.88	593.02
2CS	51+96.38	-38.38	592.58	592.67
℄ W BRG PIER 5 WB	52+08.38	-38.38	592.21	592.23
℄ PIER 5 WB	52+09.88	-38.38	592.17	592.19

NORTH EDGE OF NORTH LANE - WB

Location	Station	Offset	Theoretical Grade Elevations	Theoretical Grade Elevations Adjusted For Dead Load Deflection and Grinding
℄ PIER 2 WB	42+01.21	-36.00	602.90	602.92
℄ E BRG PIER 2 WB	42+02.38	-36.00	602.91	602.93
2A	42+12.38	-36.00	603.00	603.09
2B	42+22.38	-36.00	603.09	603.24
2C	42+32.38	-36.00	603.18	603.39
2D	42+42.38	-36.00	603.26	603.53
2E	42+52.38	-36.00	603.34	603.66
2F	42+62.38	-36.00	603.41	603.78
2G	42+72.38	-36.00	603.48	603.88
2H	42+82.38	-36.00	603.54	603.98
2I	42+92.38	-36.00	603.61	604.07
2J	43+02.38	-36.00	603.66	604.14
2K	43+12.38	-36.00	603.72	604.21
2L	43+22.38	-36.00	603.77	604.26
2M	43+32.38	-36.00	603.81	604.30
2N	43+42.38	-36.00	603.85	604.33
2O	43+52.38	-36.00	603.89	604.35
2P	43+62.38	-36.00	603.92	604.36
2Q	43+72.38	-36.00	603.95	604.36
2R	43+82.38	-36.00	603.98	604.35
2S	43+92.38	-36.00	604.00	604.33
2T	44+02.38	-36.00	604.02	604.30
2U	44+12.38	-36.00	604.03	604.27
2V	44+22.38	-36.00	604.04	604.23
2W	44+32.38	-36.00	604.04	604.19
2X	44+42.38	-36.00	604.05	604.16
2Y	44+52.38	-36.00	604.04	604.12
2Z	44+62.38	-36.00	604.04	604.09
2AA	44+72.38	-36.00	604.03	604.06
2AB	44+82.38	-36.00	604.01	604.03
2AC	44+92.38	-36.00	603.99	604.01
℄ BRG. PIER 3 WB	45+02.38	-36.00	603.97	603.99
2AD	45+12.38	-36.00	603.94	603.98
2AE	45+22.38	-36.00	603.91	603.97
2AF	45+32.38	-36.00	603.88	603.97
2AG	45+42.38	-36.00	603.84	603.97
2AH	45+52.38	-36.00	603.80	603.97
2AI	45+62.38	-36.00	603.75	603.97
2AJ	45+72.38	-36.00	603.70	603.98
2AK	45+82.38	-36.00	603.64	603.98
2AL	45+92.38	-36.00	603.59	603.98
2AM	46+02.38	-36.00	603.52	603.98
2AN	46+12.38	-36.00	603.46	603.97
2AO	46+22.38	-36.00	603.39	603.96
2AP	46+32.38	-36.00	603.31	603.93
2AQ	46+42.38	-36.00	603.23	603.90
2AR	46+52.38	-36.00	603.15	603.86
2AS	46+62.38	-36.00	603.06	603.80
2AT	46+72.38	-36.00	602.97	603.74
2AU	46+82.38	-36.00	602.88	603.67
2AV	46+92.38	-36.00	602.78	603.59
2AW	47+02.38	-36.00	602.68	603.49
2AX	47+12.38	-36.00	602.57	603.39
2AY	47+22.38	-36.00	602.46	603.27
2AZ	47+32.38	-36.00	602.34	603.15

NORTH EDGE OF NORTH LANE - WB (CONT.)

Location	Station	Offset	Theoretical Grade Elevations	Theoretical Grade Elevations Adjusted For Dead Load Deflection and Grinding
2BA	47+42.38	-36.00	602.23	603.01
2BB	47+52.38	-36.00	602.10	602.86
2BC	47+62.38	-36.00	601.98	602.71
2BD	47+72.38	-36.00	601.85	602.54
2BE	47+82.38	-36.00	601.71	602.36
2BF	47+92.38	-36.00	601.57	602.17
2BG	48+02.38	-36.00	601.43	601.98
2BH	48+12.38	-36.00	601.28	601.77
2BI	48+22.38	-36.00	601.13	601.56
2BJ	48+32.38	-36.00	600.98	601.35
2BK	48+42.38	-36.00	600.82	601.13
2BL	48+52.38	-36.00	600.66	600.91
2BM	48+62.38	-36.00	600.49	600.69
2BN	48+72.38	-36.00	600.32	600.47
2BO	48+82.38	-36.00	600.14	600.25
2BP	48+92.38	-36.00	599.97	600.04
2BQ	49+02.38	-36.00	599.78	599.83
℄ BRG. PIER 4 WB	49+16.38	-36.00	599.52	599.54
2BR	49+26.38	-36.00	599.33	599.34
2BS	49+36.38	-36.00	599.13	599.15
2BT	49+46.38	-36.00	598.93	598.96
2BU	49+56.38	-36.00	598.73	598.77
2BV	49+66.38	-36.00	598.52	598.58
2BW	49+76.38	-36.00	598.31	598.40
2BX	49+86.38	-36.00	598.09	598.22
2BY	49+96.38	-36.00	597.87	598.04
2BZ	50+06.38	-36.00	597.65	597.85
2CA	50+16.38	-36.00	597.42	597.67
2CB	50+26.38	-36.00	597.19	597.47
2CC	50+36.38	-36.00	596.95	597.27
2CD	50+46.38	-36.00	596.71	597.07
2CE	50+56.38	-36.00	596.46	596.85
2CF	50+66.38	-36.00	596.22	596.62
2CG	50+76.38	-36.00	595.96	596.39
2CH	50+86.38	-36.00	595.71	596.14
2CI	50+96.38	-36.00	595.45	595.88
2CJ	51+06.38	-36.00	595.18	595.61
2CK	51+16.38	-36.00	594.91	595.33
2CL	51+26.38	-36.00	594.64	595.04
2CM	51+36.38	-36.00	594.37	594.73
2CN	51+46.38	-36.00	594.09	594.42
2CO	51+56.38	-36.00	593.80	594.10
2CP	51+66.38	-36.00	593.51	593.76
2CQ	51+76.38	-36.00	593.22	593.42
2CR	51+86.38	-36.00	592.93	593.07
2CS	51+96.38	-36.00	592.62	592.72
℄ W BRG PIER 5 WB	52+08.38	-36.00	592.26	592.28
℄ PIER 5 WB	52+09.88	-36.00	592.21	592.23

NOTES:

1. All Elevations and Offsets are in feet.
2. Offsets are measured with respect to the I-80 WB PGL. Negative offsets are left and positive are right of the PGL.

GIRDER W4

Location	Station	Offset	Theoretical Grade Elevations	Theoretical Grade Elevations Adjusted For Dead Load Deflection and Grinding
℄ PIER 2 WB	42+01.21	-28.79	603.01	603.03
℄ E BRG PIER 2 WB	42+02.38	-28.79	603.02	603.04
2A	42+12.38	-28.79	603.11	603.20
2B	42+22.38	-28.79	603.20	603.35
2C	42+32.38	-28.79	603.29	603.50
2D	42+42.38	-28.79	603.37	603.63
2E	42+52.38	-28.79	603.44	603.76
2F	42+62.38	-28.79	603.52	603.88
2G	42+72.38	-28.79	603.59	603.99
2H	42+82.38	-28.79	603.65	604.09
2I	42+92.38	-28.79	603.71	604.18
2J	43+02.38	-28.79	603.77	604.25
2K	43+12.38	-28.79	603.82	604.32
2L	43+22.38	-28.79	603.87	604.37
2M	43+32.38	-28.79	603.92	604.41
2N	43+42.38	-28.79	603.96	604.44
2O	43+52.38	-28.79	604.00	604.46
2P	43+62.38	-28.79	604.03	604.47
2Q	43+72.38	-28.79	604.06	604.47
2R	43+82.38	-28.79	604.09	604.46
2S	43+92.38	-28.79	604.11	604.44
2T	44+02.38	-28.79	604.12	604.41
2U	44+12.38	-28.79	604.14	604.38
2V	44+22.38	-28.79	604.15	604.34
2W	44+32.38	-28.79	604.15	604.30
2X	44+42.38	-28.79	604.15	604.26
2Y	44+52.38	-28.79	604.15	604.23
2Z	44+62.38	-28.79	604.14	604.20
2AA	44+72.38	-28.79	604.13	604.17
2AB	44+82.38	-28.79	604.12	604.14
2AC	44+92.38	-28.79	604.10	604.12
℄ BRG. PIER 3 WB	45+02.38	-28.79	604.08	604.10
2AD	45+12.38	-28.79	604.05	604.09
2AE	45+22.38	-28.79	604.02	604.08
2AF	45+32.38	-28.79	603.99	604.08
2AG	45+42.38	-28.79	603.95	604.07
2AH	45+52.38	-28.79	603.90	604.08
2AI	45+62.38	-28.79	603.86	604.08
2AJ	45+72.38	-28.79	603.81	604.08
2AK	45+82.38	-28.79	603.75	604.09
2AL	45+92.38	-28.79	603.69	604.09
2AM	46+02.38	-28.79	603.63	604.09
2AN	46+12.38	-28.79	603.56	604.08
2AO	46+22.38	-28.79	603.49	604.06
2AP	46+32.38	-28.79	603.42	604.04
2AQ	46+42.38	-28.79	603.34	604.01
2AR	46+52.38	-28.79	603.26	603.96
2AS	46+62.38	-28.79	603.17	603.91
2AT	46+72.38	-28.79	603.08	603.85
2AU	46+82.38	-28.79	602.99	603.78
2AV	46+92.38	-28.79	602.89	603.70
2AW	47+02.38	-28.79	602.78	603.60
2AX	47+12.38	-28.79	602.68	603.50
2AY	47+22.38	-28.79	602.57	603.38
2AZ	47+32.38	-28.79	602.45	603.26

GIRDER W4 (CONT.)

Location	Station	Offset	Theoretical Grade Elevations	Theoretical Grade Elevations Adjusted For Dead Load Deflection and Grinding
2BA	47+42.38	-28.79	602.33	603.12
2BB	47+52.38	-28.79	602.21	602.97
2BC	47+62.38	-28.79	602.08	602.81
2BD	47+72.38	-28.79	601.95	602.65
2BE	47+82.38	-28.79	601.82	602.47
2BF	47+92.38	-28.79	601.68	602.28
2BG	48+02.38	-28.79	601.54	602.09
2BH	48+12.38	-28.79	601.39	601.88
2BI	48+22.38	-28.79	601.24	601.67
2BJ	48+32.38	-28.79	601.09	601.46
2BK	48+42.38	-28.79	600.93	601.24
2BL	48+52.38	-28.79	600.76	601.02
2BM	48+62.38	-28.79	600.60	600.80
2BN	48+72.38	-28.79	600.43	600.58
2BO	48+82.38	-28.79	600.25	600.36
2BP	48+92.38	-28.79	600.07	600.15
2BQ	49+02.38	-28.79	599.89	599.94
℄ BRG. PIER 4 WB	49+16.38	-28.79	599.63	599.65
2BR	49+26.38	-28.79	599.44	599.45
2BS	49+36.38	-28.79	599.24	599.26
2BT	49+46.38	-28.79	599.04	599.06
2BU	49+56.38	-28.79	598.84	598.87
2BV	49+66.38	-28.79	598.63	598.69
2BW	49+76.38	-28.79	598.41	598.51
2BX	49+86.38	-28.79	598.20	598.32
2BY	49+96.38	-28.79	597.98	598.14
2BZ	50+06.38	-28.79	597.75	597.96
2CA	50+16.38	-28.79	597.53	597.77
2CB	50+26.38	-28.79	597.29	597.58
2CC	50+36.38	-28.79	597.06	597.38
2CD	50+46.38	-28.79	596.82	597.17
2CE	50+56.38	-28.79	596.57	596.96
2CF	50+66.38	-28.79	596.32	596.73
2CG	50+76.38	-28.79	596.07	596.49
2CH	50+86.38	-28.79	595.82	596.25
2CI	50+96.38	-28.79	595.56	595.99
2CJ	51+06.38	-28.79	595.29	595.72
2CK	51+16.38	-28.79	595.02	595.44
2CL	51+26.38	-28.79	594.75	595.14
2CM	51+36.38	-28.79	594.47	594.84
2CN	51+46.38	-28.79	594.19	594.53
2CO	51+56.38	-28.79	593.91	594.21
2CP	51+66.38	-28.79	593.62	593.87
2CQ	51+76.38	-28.79	593.33	593.53
2CR	51+86.38	-28.79	593.03	593.18
2CS	51+96.38	-28.79	592.73	592.82
℄ W BRG PIER 5 WB	52+08.38	-28.79	592.37	592.39
℄ PIER 5 WB	52+09.88	-28.79	592.32	592.34

CROWN - WB

Location	Station	Offset	Theoretical Grade Elevations	Theoretical Grade Elevations Adjusted For Dead Load Deflection and Grinding
℄ PIER 2 WB	42+01.21	-24.00	603.08	603.10
℄ E BRG PIER 2 WB	42+02.38	-24.00	603.09	603.11
2A	42+12.38	-24.00	603.18	603.27
2B	42+22.38	-24.00	603.27	603.42
2C	42+32.38	-24.00	603.36	603.57
2D	42+42.38	-24.00	603.44	603.71
2E	42+52.38	-24.00	603.52	603.84
2F	42+62.38	-24.00	603.59	603.96
2G	42+72.38	-24.00	603.66	604.06
2H	42+82.38	-24.00	603.72	604.16
2I	42+92.38	-24.00	603.79	604.25
2J	43+02.38	-24.00	603.84	604.32
2K	43+12.38	-24.00	603.90	604.39
2L	43+22.38	-24.00	603.95	604.44
2M	43+32.38	-24.00	603.99	604.48
2N	43+42.38	-24.00	604.03	604.51
2O	43+52.38	-24.00	604.07	604.53
2P	43+62.38	-24.00	604.10	604.54
2Q	43+72.38	-24.00	604.13	604.54
2R	43+82.38	-24.00	604.16	604.53
2S	43+92.38	-24.00	604.18	604.51
2T	44+02.38	-24.00	604.20	604.48
2U	44+12.38	-24.00	604.21	604.45
2V	44+22.38	-24.00	604.22	604.41
2W	44+32.38	-24.00	604.22	604.37
2X	44+42.38	-24.00	604.23	604.34
2Y	44+52.38	-24.00	604.22	604.30
2Z	44+62.38	-24.00	604.22	604.27
2AA	44+72.38	-24.00	604.21	604.24
2AB	44+82.38	-24.00	604.19	604.21
2AC	44+92.38	-24.00	604.17	604.19
℄ BRG. PIER 3 WB	45+02.38	-24.00	604.15	604.17
2AD	45+12.38	-24.00	604.12	604.16
2AE	45+22.38	-24.00	604.09	604.15
2AF	45+32.38	-24.00	604.06	604.15
2AG	45+42.38	-24.00	604.02	604.15
2AH	45+52.38	-24.00	603.98	604.15
2AI	45+62.38	-24.00	603.93	604.15
2AJ	45+72.38	-24.00	603.88	604.16
2AK	45+82.38	-24.00	603.82	604.16
2AL	45+92.38	-24.00	603.77	604.16
2AM	46+02.38	-24.00	603.70	604.16
2AN	46+12.38	-24.00	603.64	604.15
2AO	46+22.38	-24.00	603.57	604.14
2AP	46+32.38	-24.00	603.49	604.11
2AQ	46+42.38	-24.00	603.41	604.08
2AR	46+52.38	-24.00	603.33	604.04
2AS	46+62.38	-24.00	603.24	603.98
2AT	46+72.38	-24.00	603.15	603.92
2AU	46+82.38	-24.00	603.06	603.85
2AV	46+92.38	-24.00	602.96	603.77
2AW	47+02.38	-24.00	602.86	603.67
2AX	47+12.38	-24.00	602.75	603.57
2AY	47+22.38	-24.00	602.64	603.45
2AZ	47+32.38	-24.00	602.52	603.33

NOTES:

1. All Elevations and Offsets are in feet.
2. Offsets are measured with respect to the I-80 WB PGL. Negative offsets are left and positive are right of the PGL.

WSP USA Inc.
30 N. LASALLE STREET
SUITE 4200
CHICAGO, IL 60602
TEL: (312) 782-8150
FAX: (312) 782-1684

USER NAME = USSJ696614	DESIGNED - LAS	REVISED -	
	CHECKED - PJL	REVISED -	
PLOT SCALE = 100.000 ' / in.	DRAWN - GM	REVISED -	
PLOT DATE = 11/5/2025	CHECKED - LAS	REVISED -	

STATE OF ILLINOIS
DEPARTMENT OF TRANSPORTATION

TOP OF SLAB ELEVATIONS 5 - UNIT 2 WB
STRUCTURE NUMBER 099-8309 WB AND 099-8325 EB

SHEET S-48 OF S-333 SHEETS

F.A.I RTE.	SECTION	COUNTY	TOTAL SHEETS	SHEET NO.
I-80	FAI 80 21 STRUCTURE 2	WILL	1230	629
		CONTRACT NO. 62R23		
	ILLINOIS	FED. AID PROJECT		

CROWN - WB (CONT.)

Location	Station	Offset	Theoretical Grade Elevations	Theoretical Grade Elevations Adjusted For Dead Load Deflection and Grinding
2BA	47+42.38	-24.00	602.41	603.19
2BB	47+52.38	-24.00	602.28	603.04
2BC	47+62.38	-24.00	602.16	602.89
2BD	47+72.38	-24.00	602.03	602.72
2BE	47+82.38	-24.00	601.89	602.54
2BF	47+92.38	-24.00	601.75	602.35
2BG	48+02.38	-24.00	601.61	602.16
2BH	48+12.38	-24.00	601.46	601.95
2BI	48+22.38	-24.00	601.31	601.74
2BJ	48+32.38	-24.00	601.16	601.53
2BK	48+42.38	-24.00	601.00	601.31
2BL	48+52.38	-24.00	600.84	601.09
2BM	48+62.38	-24.00	600.67	600.87
2BN	48+72.38	-24.00	600.50	600.65
2BO	48+82.38	-24.00	600.32	600.43
2BP	48+92.38	-24.00	600.15	600.22
2BQ	49+02.38	-24.00	599.96	600.01
℄ BRG. PIER 4 WB	49+16.38	-24.00	599.70	599.72
2BR	49+26.38	-24.00	599.51	599.52
2BS	49+36.38	-24.00	599.31	599.33
2BT	49+46.38	-24.00	599.11	599.14
2BU	49+56.38	-24.00	598.91	598.95
2BV	49+66.38	-24.00	598.70	598.76
2BW	49+76.38	-24.00	598.49	598.58
2BX	49+86.38	-24.00	598.27	598.40
2BY	49+96.38	-24.00	598.05	598.22
2BZ	50+06.38	-24.00	597.83	598.03
2CA	50+16.38	-24.00	597.60	597.85
2CB	50+26.38	-24.00	597.37	597.65
2CC	50+36.38	-24.00	597.13	597.45
2CD	50+46.38	-24.00	596.89	597.25
2CE	50+56.38	-24.00	596.64	597.03
2CF	50+66.38	-24.00	596.40	596.80
2CG	50+76.38	-24.00	596.14	596.57
2CH	50+86.38	-24.00	595.89	596.32
2CI	50+96.38	-24.00	595.63	596.06
2CJ	51+06.38	-24.00	595.36	595.79
2CK	51+16.38	-24.00	595.09	595.51
2CL	51+26.38	-24.00	594.82	595.22
2CM	51+36.38	-24.00	594.55	594.91
2CN	51+46.38	-24.00	594.27	594.60
2CO	51+56.38	-24.00	593.98	594.28
2CP	51+66.38	-24.00	593.69	593.94
2CQ	51+76.38	-24.00	593.40	593.60
2CR	51+86.38	-24.00	593.11	593.25
2CS	51+96.38	-24.00	592.80	592.90
℄ W BRG PIER 5 WB	52+08.38	-24.00	592.44	592.46
℄ PIER 5 WB	52+09.88	-24.00	592.39	592.41

GIRDER W5

Location	Station	Offset	Theoretical Grade Elevations	Theoretical Grade Elevations Adjusted For Dead Load Deflection and Grinding
℄ PIER 2 WB	42+01.21	-19.21	603.01	603.03
℄ E BRG PIER 2 WB	42+02.38	-19.21	603.02	603.04
2A	42+12.38	-19.21	603.11	603.20
2B	42+22.38	-19.21	603.20	603.35
2C	42+32.38	-19.21	603.29	603.50
2D	42+42.38	-19.21	603.37	603.63
2E	42+52.38	-19.21	603.44	603.76
2F	42+62.38	-19.21	603.52	603.88
2G	42+72.38	-19.21	603.59	603.99
2H	42+82.38	-19.21	603.65	604.09
2I	42+92.38	-19.21	603.71	604.18
2J	43+02.38	-19.21	603.77	604.25
2K	43+12.38	-19.21	603.82	604.32
2L	43+22.38	-19.21	603.87	604.37
2M	43+32.38	-19.21	603.92	604.41
2N	43+42.38	-19.21	603.96	604.44
2O	43+52.38	-19.21	604.00	604.46
2P	43+62.38	-19.21	604.03	604.47
2Q	43+72.38	-19.21	604.06	604.47
2R	43+82.38	-19.21	604.09	604.46
2S	43+92.38	-19.21	604.11	604.44
2T	44+02.38	-19.21	604.12	604.41
2U	44+12.38	-19.21	604.14	604.38
2V	44+22.38	-19.21	604.15	604.34
2W	44+32.38	-19.21	604.15	604.30
2X	44+42.38	-19.21	604.15	604.26
2Y	44+52.38	-19.21	604.15	604.23
2Z	44+62.38	-19.21	604.14	604.20
2AA	44+72.38	-19.21	604.13	604.17
2AB	44+82.38	-19.21	604.12	604.14
2AC	44+92.38	-19.21	604.10	604.12
℄ BRG. PIER 3 WB	45+02.38	-19.21	604.08	604.10
2AD	45+12.38	-19.21	604.05	604.09
2AE	45+22.38	-19.21	604.02	604.08
2AF	45+32.38	-19.21	603.99	604.08
2AG	45+42.38	-19.21	603.95	604.07
2AH	45+52.38	-19.21	603.90	604.08
2AI	45+62.38	-19.21	603.86	604.08
2AJ	45+72.38	-19.21	603.81	604.08
2AK	45+82.38	-19.21	603.75	604.09
2AL	45+92.38	-19.21	603.69	604.09
2AM	46+02.38	-19.21	603.63	604.09
2AN	46+12.38	-19.21	603.56	604.08
2AO	46+22.38	-19.21	603.49	604.06
2AP	46+32.38	-19.21	603.42	604.04
2AQ	46+42.38	-19.21	603.34	604.01
2AR	46+52.38	-19.21	603.26	603.96
2AS	46+62.38	-19.21	603.17	603.91
2AT	46+72.38	-19.21	603.08	603.85
2AU	46+82.38	-19.21	602.99	603.78
2AV	46+92.38	-19.21	602.89	603.70
2AW	47+02.38	-19.21	602.78	603.60
2AX	47+12.38	-19.21	602.68	603.50
2AY	47+22.38	-19.21	602.57	603.38
2AZ	47+32.38	-19.21	602.45	603.26

GIRDER W5 (CONT.)

Location	Station	Offset	Theoretical Grade Elevations	Theoretical Grade Elevations Adjusted For Dead Load Deflection and Grinding
2BA	47+42.38	-19.21	602.33	603.12
2BB	47+52.38	-19.21	602.21	602.97
2BC	47+62.38	-19.21	602.08	602.81
2BD	47+72.38	-19.21	601.95	602.65
2BE	47+82.38	-19.21	601.82	602.47
2BF	47+92.38	-19.21	601.68	602.28
2BG	48+02.38	-19.21	601.54	602.09
2BH	48+12.38	-19.21	601.39	601.88
2BI	48+22.38	-19.21	601.24	601.67
2BJ	48+32.38	-19.21	601.09	601.46
2BK	48+42.38	-19.21	600.93	601.24
2BL	48+52.38	-19.21	600.76	601.02
2BM	48+62.38	-19.21	600.60	600.80
2BN	48+72.38	-19.21	600.43	600.58
2BO	48+82.38	-19.21	600.25	600.36
2BP	48+92.38	-19.21	600.07	600.15
2BQ	49+02.38	-19.21	599.89	599.94
℄ BRG. PIER 4 WB	49+16.38	-19.21	599.63	599.65
2BR	49+26.38	-19.21	599.44	599.45
2BS	49+36.38	-19.21	599.24	599.26
2BT	49+46.38	-19.21	599.04	599.06
2BU	49+56.38	-19.21	598.84	598.87
2BV	49+66.38	-19.21	598.63	598.69
2BW	49+76.38	-19.21	598.41	598.51
2BX	49+86.38	-19.21	598.20	598.32
2BY	49+96.38	-19.21	597.98	598.14
2BZ	50+06.38	-19.21	597.75	597.96
2CA	50+16.38	-19.21	597.53	597.77
2CB	50+26.38	-19.21	597.29	597.58
2CC	50+36.38	-19.21	597.06	597.38
2CD	50+46.38	-19.21	596.82	597.17
2CE	50+56.38	-19.21	596.57	596.96
2CF	50+66.38	-19.21	596.32	596.73
2CG	50+76.38	-19.21	596.07	596.49
2CH	50+86.38	-19.21	595.82	596.25
2CI	50+96.38	-19.21	595.56	595.99
2CJ	51+06.38	-19.21	595.29	595.72
2CK	51+16.38	-19.21	595.02	595.44
2CL	51+26.38	-19.21	594.75	595.14
2CM	51+36.38	-19.21	594.47	594.84
2CN	51+46.38	-19.21	594.19	594.53
2CO	51+56.38	-19.21	593.91	594.21
2CP	51+66.38	-19.21	593.62	593.87
2CQ	51+76.38	-19.21	593.33	593.53
2CR	51+86.38	-19.21	593.03	593.18
2CS	51+96.38	-19.21	592.73	592.82
℄ W BRG PIER 5 WB	52+08.38	-19.21	592.37	592.39
℄ PIER 5 WB	52+09.88	-19.21	592.32	592.34

NOTES:

1. All Elevations and Offsets are in feet.
2. Offsets are measured with respect to the I-80 WB PGL. Negative offsets are left and positive are right of the PGL.

NORTH EDGE OF SOUTH LANE - WB

Location	Station	Offset	Theoretical Grade Elevations	Theoretical Grade Elevations Adjusted For Dead Load Deflection and Grinding
℄ PIER 2 WB	42+01.21	-12.00	602.90	602.92
℄ E BRG PIER 2 WB	42+02.38	-12.00	602.91	602.93
2A	42+12.38	-12.00	603.00	603.09
2B	42+22.38	-12.00	603.09	603.24
2C	42+32.38	-12.00	603.18	603.39
2D	42+42.38	-12.00	603.26	603.53
2E	42+52.38	-12.00	603.34	603.66
2F	42+62.38	-12.00	603.41	603.78
2G	42+72.38	-12.00	603.48	603.88
2H	42+82.38	-12.00	603.54	603.98
2I	42+92.38	-12.00	603.61	604.07
2J	43+02.38	-12.00	603.66	604.14
2K	43+12.38	-12.00	603.72	604.21
2L	43+22.38	-12.00	603.77	604.26
2M	43+32.38	-12.00	603.81	604.30
2N	43+42.38	-12.00	603.85	604.33
2O	43+52.38	-12.00	603.89	604.35
2P	43+62.38	-12.00	603.92	604.36
2Q	43+72.38	-12.00	603.95	604.36
2R	43+82.38	-12.00	603.98	604.35
2S	43+92.38	-12.00	604.00	604.33
2T	44+02.38	-12.00	604.02	604.30
2U	44+12.38	-12.00	604.03	604.27
2V	44+22.38	-12.00	604.04	604.23
2W	44+32.38	-12.00	604.04	604.19
2X	44+42.38	-12.00	604.05	604.16
2Y	44+52.38	-12.00	604.04	604.12
2Z	44+62.38	-12.00	604.04	604.09
2AA	44+72.38	-12.00	604.03	604.06
2AB	44+82.38	-12.00	604.01	604.03
2AC	44+92.38	-12.00	603.99	604.01
℄ BRG. PIER 3 WB	45+02.38	-12.00	603.97	603.99
2AD	45+12.38	-12.00	603.94	603.98
2AE	45+22.38	-12.00	603.91	603.97
2AF	45+32.38	-12.00	603.88	603.97
2AG	45+42.38	-12.00	603.84	603.97
2AH	45+52.38	-12.00	603.80	603.97
2AI	45+62.38	-12.00	603.75	603.97
2AJ	45+72.38	-12.00	603.70	603.98
2AK	45+82.38	-12.00	603.64	603.98
2AL	45+92.38	-12.00	603.59	603.98
2AM	46+02.38	-12.00	603.52	603.98
2AN	46+12.38	-12.00	603.46	603.97
2AO	46+22.38	-12.00	603.39	603.96
2AP	46+32.38	-12.00	603.31	603.93
2AQ	46+42.38	-12.00	603.23	603.90
2AR	46+52.38	-12.00	603.15	603.86
2AS	46+62.38	-12.00	603.06	603.80
2AT	46+72.38	-12.00	602.97	603.74
2AU	46+82.38	-12.00	602.88	603.67
2AV	46+92.38	-12.00	602.78	603.59
2AW	47+02.38	-12.00	602.68	603.49
2AX	47+12.38	-12.00	602.57	603.39
2AY	47+22.38	-12.00	602.46	603.27
2AZ	47+32.38	-12.00	602.34	603.15

NORTH EDGE OF SOUTH LANE - WB (CONT.)

Location	Station	Offset	Theoretical Grade Elevations	Theoretical Grade Elevations Adjusted For Dead Load Deflection and Grinding
2BA	47+42.38	-12.00	602.23	603.01
2BB	47+52.38	-12.00	602.10	602.86
2BC	47+62.38	-12.00	601.98	602.71
2BD	47+72.38	-12.00	601.85	602.54
2BE	47+82.38	-12.00	601.71	602.36
2BF	47+92.38	-12.00	601.57	602.17
2BG	48+02.38	-12.00	601.43	601.98
2BH	48+12.38	-12.00	601.28	601.77
2BI	48+22.38	-12.00	601.13	601.56
2BJ	48+32.38	-12.00	600.98	601.35
2BK	48+42.38	-12.00	600.82	601.13
2BL	48+52.38	-12.00	600.66	600.91
2BM	48+62.38	-12.00	600.49	600.69
2BN	48+72.38	-12.00	600.32	600.47
2BO	48+82.38	-12.00	600.14	600.25
2BP	48+92.38	-12.00	599.97	600.04
2BQ	49+02.38	-12.00	599.78	599.83
℄ BRG. PIER 4 WB	49+16.38	-12.00	599.52	599.54
2BR	49+26.38	-12.00	599.33	599.34
2BS	49+36.38	-12.00	599.13	599.15
2BT	49+46.38	-12.00	598.93	598.96
2BU	49+56.38	-12.00	598.73	598.77
2BV	49+66.38	-12.00	598.52	598.58
2BW	49+76.38	-12.00	598.31	598.40
2BX	49+86.38	-12.00	598.09	598.22
2BY	49+96.38	-12.00	597.87	598.04
2BZ	50+06.38	-12.00	597.65	597.85
2CA	50+16.38	-12.00	597.42	597.67
2CB	50+26.38	-12.00	597.19	597.47
2CC	50+36.38	-12.00	596.95	597.27
2CD	50+46.38	-12.00	596.71	597.07
2CE	50+56.38	-12.00	596.46	596.85
2CF	50+66.38	-12.00	596.22	596.62
2CG	50+76.38	-12.00	595.96	596.39
2CH	50+86.38	-12.00	595.71	596.14
2CI	50+96.38	-12.00	595.45	595.88
2CJ	51+06.38	-12.00	595.18	595.61
2CK	51+16.38	-12.00	594.91	595.33
2CL	51+26.38	-12.00	594.64	595.04
2CM	51+36.38	-12.00	594.37	594.73
2CN	51+46.38	-12.00	594.09	594.42
2CO	51+56.38	-12.00	593.80	594.10
2CP	51+66.38	-12.00	593.51	593.76
2CQ	51+76.38	-12.00	593.22	593.42
2CR	51+86.38	-12.00	592.93	593.07
2CS	51+96.38	-12.00	592.62	592.72
℄ W BRG PIER 5 WB	52+08.38	-12.00	592.26	592.28
℄ PIER 5 WB	52+09.88	-12.00	592.21	592.23

GIRDER W6

Location	Station	Offset	Theoretical Grade Elevations	Theoretical Grade Elevations Adjusted For Dead Load Deflection and Grinding
℄ PIER 2 WB	42+01.21	-9.62	602.85	602.87
℄ E BRG PIER 2 WB	42+02.38	-9.62	602.86	602.88
2A	42+12.38	-9.62	602.96	603.04
2B	42+22.38	-9.62	603.05	603.19
2C	42+32.38	-9.62	603.13	603.34
2D	42+42.38	-9.62	603.21	603.48
2E	42+52.38	-9.62	603.29	603.61
2F	42+62.38	-9.62	603.36	603.73
2G	42+72.38	-9.62	603.43	603.84
2H	42+82.38	-9.62	603.50	603.93
2I	42+92.38	-9.62	603.56	604.02
2J	43+02.38	-9.62	603.62	604.10
2K	43+12.38	-9.62	603.67	604.16
2L	43+22.38	-9.62	603.72	604.22
2M	43+32.38	-9.62	603.76	604.26
2N	43+42.38	-9.62	603.81	604.29
2O	43+52.38	-9.62	603.84	604.30
2P	43+62.38	-9.62	603.88	604.31
2Q	43+72.38	-9.62	603.90	604.31
2R	43+82.38	-9.62	603.93	604.30
2S	43+92.38	-9.62	603.95	604.28
2T	44+02.38	-9.62	603.97	604.25
2U	44+12.38	-9.62	603.98	604.22
2V	44+22.38	-9.62	603.99	604.19
2W	44+32.38	-9.62	604.00	604.15
2X	44+42.38	-9.62	604.00	604.11
2Y	44+52.38	-9.62	604.00	604.07
2Z	44+62.38	-9.62	603.99	604.04
2AA	44+72.38	-9.62	603.98	604.01
2AB	44+82.38	-9.62	603.96	603.99
2AC	44+92.38	-9.62	603.94	603.96
℄ BRG. PIER 3 WB	45+02.38	-9.62	603.92	603.94
2AD	45+12.38	-9.62	603.90	603.93
2AE	45+22.38	-9.62	603.86	603.92
2AF	45+32.38	-9.62	603.83	603.92
2AG	45+42.38	-9.62	603.79	603.92
2AH	45+52.38	-9.62	603.75	603.92
2AI	45+62.38	-9.62	603.70	603.92
2AJ	45+72.38	-9.62	603.65	603.93
2AK	45+82.38	-9.62	603.60	603.93
2AL	45+92.38	-9.62	603.54	603.93
2AM	46+02.38	-9.62	603.48	603.93
2AN	46+12.38	-9.62	603.41	603.92
2AO	46+22.38	-9.62	603.34	603.91
2AP	46+32.38	-9.62	603.26	603.88
2AQ	46+42.38	-9.62	603.18	603.85
2AR	46+52.38	-9.62	603.10	603.81
2AS	46+62.38	-9.62	603.02	603.76
2AT	46+72.38	-9.62	602.92	603.70
2AU	46+82.38	-9.62	602.83	603.62
2AV	46+92.38	-9.62	602.73	603.54
2AW	47+02.38	-9.62	602.63	603.45
2AX	47+12.38	-9.62	602.52	603.34
2AY	47+22.38	-9.62	602.41	603.23
2AZ	47+32.38	-9.62	602.30	603.10

NOTES:

1. All Elevations and Offsets are in feet.
2. Offsets are measured with respect to the I-80 WB PGL. Negative offsets are left and positive are right of the PGL.

GIRDER W6 (CONT.)

Location	Station	Offset	Theoretical Grade Elevations	Theoretical Grade Elevations Adjusted For Dead Load Deflection and Grinding
2BA	47+42.38	-9.62	602.18	602.96
2BB	47+52.38	-9.62	602.06	602.81
2BC	47+62.38	-9.62	601.93	602.66
2BD	47+72.38	-9.62	601.80	602.49
2BE	47+82.38	-9.62	601.66	602.31
2BF	47+92.38	-9.62	601.52	602.13
2BG	48+02.38	-9.62	601.38	601.93
2BH	48+12.38	-9.62	601.24	601.73
2BI	48+22.38	-9.62	601.08	601.52
2BJ	48+32.38	-9.62	600.93	601.30
2BK	48+42.38	-9.62	600.77	601.08
2BL	48+52.38	-9.62	600.61	600.86
2BM	48+62.38	-9.62	600.44	600.64
2BN	48+72.38	-9.62	600.27	600.42
2BO	48+82.38	-9.62	600.10	600.21
2BP	48+92.38	-9.62	599.92	599.99
2BQ	49+02.38	-9.62	599.74	599.78
℄ BRG. PIER 4 WB	49+16.38	-9.62	599.47	599.49
2BR	49+26.38	-9.62	599.28	599.30
2BS	49+36.38	-9.62	599.08	599.10
2BT	49+46.38	-9.62	598.88	598.91
2BU	49+56.38	-9.62	598.68	598.72
2BV	49+66.38	-9.62	598.47	598.53
2BW	49+76.38	-9.62	598.26	598.35
2BX	49+86.38	-9.62	598.04	598.17
2BY	49+96.38	-9.62	597.82	597.99
2BZ	50+06.38	-9.62	597.60	597.81
2CA	50+16.38	-9.62	597.37	597.62
2CB	50+26.38	-9.62	597.14	597.43
2CC	50+36.38	-9.62	596.90	597.23
2CD	50+46.38	-9.62	596.66	597.02
2CE	50+56.38	-9.62	596.42	596.80
2CF	50+66.38	-9.62	596.17	596.58
2CG	50+76.38	-9.62	595.92	596.34
2CH	50+86.38	-9.62	595.66	596.09
2CI	50+96.38	-9.62	595.40	595.83
2CJ	51+06.38	-9.62	595.14	595.56
2CK	51+16.38	-9.62	594.87	595.28
2CL	51+26.38	-9.62	594.60	594.99
2CM	51+36.38	-9.62	594.32	594.69
2CN	51+46.38	-9.62	594.04	594.37
2CO	51+56.38	-9.62	593.75	594.05
2CP	51+66.38	-9.62	593.47	593.72
2CQ	51+76.38	-9.62	593.17	593.37
2CR	51+86.38	-9.62	592.88	593.02
2CS	51+96.38	-9.62	592.58	592.67
℄ W BRG PIER 5 WB	52+08.38	-9.62	592.21	592.23
℄ PIER 5 WB	52+09.88	-9.62	592.17	592.19

GIRDER W7

Location	Station	Offset	Theoretical Grade Elevations	Theoretical Grade Elevations Adjusted For Dead Load Deflection and Grinding
℄ PIER 2 WB	42+01.21	-0.04	602.66	602.68
℄ E BRG PIER 2 WB	42+02.38	-0.04	602.67	602.69
2A	42+12.38	-0.04	602.76	602.85
2B	42+22.38	-0.04	602.85	603.00
2C	42+32.38	-0.04	602.94	603.15
2D	42+42.38	-0.04	603.02	603.29
2E	42+52.38	-0.04	603.10	603.42
2F	42+62.38	-0.04	603.17	603.54
2G	42+72.38	-0.04	603.24	603.65
2H	42+82.38	-0.04	603.31	603.74
2I	42+92.38	-0.04	603.37	603.83
2J	43+02.38	-0.04	603.42	603.91
2K	43+12.38	-0.04	603.48	603.97
2L	43+22.38	-0.04	603.53	604.02
2M	43+32.38	-0.04	603.57	604.06
2N	43+42.38	-0.04	603.61	604.09
2O	43+52.38	-0.04	603.65	604.11
2P	43+62.38	-0.04	603.68	604.12
2Q	43+72.38	-0.04	603.71	604.12
2R	43+82.38	-0.04	603.74	604.11
2S	43+92.38	-0.04	603.76	604.09
2T	44+02.38	-0.04	603.78	604.06
2U	44+12.38	-0.04	603.79	604.03
2V	44+22.38	-0.04	603.80	603.99
2W	44+32.38	-0.04	603.81	603.96
2X	44+42.38	-0.04	603.81	603.92
2Y	44+52.38	-0.04	603.80	603.88
2Z	44+62.38	-0.04	603.80	603.85
2AA	44+72.38	-0.04	603.79	603.82
2AB	44+82.38	-0.04	603.77	603.79
2AC	44+92.38	-0.04	603.75	603.77
℄ BRG. PIER 3 WB	45+02.38	-0.04	603.73	603.75
2AD	45+12.38	-0.04	603.70	603.74
2AE	45+22.38	-0.04	603.67	603.73
2AF	45+32.38	-0.04	603.64	603.73
2AG	45+42.38	-0.04	603.60	603.73
2AH	45+52.38	-0.04	603.56	603.73
2AI	45+62.38	-0.04	603.51	603.73
2AJ	45+72.38	-0.04	603.46	603.74
2AK	45+82.38	-0.04	603.40	603.74
2AL	45+92.38	-0.04	603.35	603.74
2AM	46+02.38	-0.04	603.28	603.74
2AN	46+12.38	-0.04	603.22	603.73
2AO	46+22.38	-0.04	603.15	603.72
2AP	46+32.38	-0.04	603.07	603.69
2AQ	46+42.38	-0.04	602.99	603.66
2AR	46+52.38	-0.04	602.91	603.62
2AS	46+62.38	-0.04	602.82	603.57
2AT	46+72.38	-0.04	602.73	603.50
2AU	46+82.38	-0.04	602.64	603.43
2AV	46+92.38	-0.04	602.54	603.35
2AW	47+02.38	-0.04	602.44	603.25
2AX	47+12.38	-0.04	602.33	603.15
2AY	47+22.38	-0.04	602.22	603.04
2AZ	47+32.38	-0.04	602.10	602.91

GIRDER W7 (CONT.)

Location	Station	Offset	Theoretical Grade Elevations	Theoretical Grade Elevations Adjusted For Dead Load Deflection and Grinding
2BA	47+42.38	-0.04	601.99	602.77
2BB	47+52.38	-0.04	601.86	602.62
2BC	47+62.38	-0.04	601.74	602.47
2BD	47+72.38	-0.04	601.61	602.30
2BE	47+82.38	-0.04	601.47	602.12
2BF	47+92.38	-0.04	601.33	601.93
2BG	48+02.38	-0.04	601.19	601.74
2BH	48+12.38	-0.04	601.04	601.54
2BI	48+22.38	-0.04	600.89	601.33
2BJ	48+32.38	-0.04	600.74	601.11
2BK	48+42.38	-0.04	600.58	600.89
2BL	48+52.38	-0.04	600.42	600.67
2BM	48+62.38	-0.04	600.25	600.45
2BN	48+72.38	-0.04	600.08	600.23
2BO	48+82.38	-0.04	599.90	600.02
2BP	48+92.38	-0.04	599.73	599.80
2BQ	49+02.38	-0.04	599.54	599.59
℄ BRG. PIER 4 WB	49+16.38	-0.04	599.28	599.30
2BR	49+26.38	-0.04	599.09	599.10
2BS	49+36.38	-0.04	598.89	598.91
2BT	49+46.38	-0.04	598.69	598.72
2BU	49+56.38	-0.04	598.49	598.53
2BV	49+66.38	-0.04	598.28	598.34
2BW	49+76.38	-0.04	598.07	598.16
2BX	49+86.38	-0.04	597.85	597.98
2BY	49+96.38	-0.04	597.63	597.80
2BZ	50+06.38	-0.04	597.41	597.61
2CA	50+16.38	-0.04	597.18	597.43
2CB	50+26.38	-0.04	596.95	597.23
2CC	50+36.38	-0.04	596.71	597.04
2CD	50+46.38	-0.04	596.47	596.83
2CE	50+56.38	-0.04	596.23	596.61
2CF	50+66.38	-0.04	595.98	596.38
2CG	50+76.38	-0.04	595.72	596.15
2CH	50+86.38	-0.04	595.47	595.90
2CI	50+96.38	-0.04	595.21	595.64
2CJ	51+06.38	-0.04	594.94	595.37
2CK	51+16.38	-0.04	594.68	595.09
2CL	51+26.38	-0.04	594.40	594.80
2CM	51+36.38	-0.04	594.13	594.49
2CN	51+46.38	-0.04	593.85	594.18
2CO	51+56.38	-0.04	593.56	593.86
2CP	51+66.38	-0.04	593.27	593.53
2CQ	51+76.38	-0.04	592.98	593.18
2CR	51+86.38	-0.04	592.69	592.83
2CS	51+96.38	-0.04	592.39	592.48
℄ W BRG PIER 5 WB	52+08.38	-0.04	592.02	592.04
℄ PIER 5 WB	52+09.88	-0.04	591.97	591.99

NOTES:

1. All Elevations and Offsets are in feet.
2. Offsets are measured with respect to the I-80 WB PGL. Negative offsets are left and positive are right of the PGL.

WSP USA Inc.
30 N. LASALLE STREET
SUITE 4200
CHICAGO, IL 60602
TEL: (312) 782-8150
FAX: (312) 782-1684

USER NAME = USSJ696614	DESIGNED - LAS	REVISED -	
	CHECKED - PJL	REVISED -	
PLOT SCALE = 100.000 ' / in.	DRAWN - GM	REVISED -	
PLOT DATE = 11/5/2025	CHECKED - LAS	REVISED -	

STATE OF ILLINOIS
DEPARTMENT OF TRANSPORTATION

TOP OF SLAB ELEVATIONS 8 - UNIT 2 WB
STRUCTURE NUMBER 099-8309 WB AND 099-8325 EB

SHEET S-51 OF S-333 SHEETS

F.A.I RTE.	SECTION	COUNTY	TOTAL SHEETS	SHEET NO.
I-80	FAI 80 21 STRUCTURE 2	WILL	1230	632
		CONTRACT NO. 62R23		
		ILLINOIS	FED. AID PROJECT	

PGL I-80 WB

Location	Station	Offset	Theoretical Grade Elevations	Theoretical Grade Elevations Adjusted For Dead Load Deflection and Grinding
℄ PIER 2 WB	42+01.21	0.00	602.66	602.68
℄ E BRG PIER 2 WB	42+02.38	0.00	602.67	602.69
2A	42+12.38	0.00	602.76	602.85
2B	42+22.38	0.00	602.85	603.00
2C	42+32.38	0.00	602.94	603.15
2D	42+42.38	0.00	603.02	603.29
2E	42+52.38	0.00	603.10	603.42
2F	42+62.38	0.00	603.17	603.54
2G	42+72.38	0.00	603.24	603.64
2H	42+82.38	0.00	603.30	603.74
2I	42+92.38	0.00	603.37	603.83
2J	43+02.38	0.00	603.42	603.90
2K	43+12.38	0.00	603.48	603.97
2L	43+22.38	0.00	603.53	604.02
2M	43+32.38	0.00	603.57	604.06
2N	43+42.38	0.00	603.61	604.09
2O	43+52.38	0.00	603.65	604.11
2P	43+62.38	0.00	603.68	604.12
2Q	43+72.38	0.00	603.71	604.12
2R	43+82.38	0.00	603.74	604.11
2S	43+92.38	0.00	603.76	604.09
2T	44+02.38	0.00	603.78	604.06
2U	44+12.38	0.00	603.79	604.03
2V	44+22.38	0.00	603.80	603.99
2W	44+32.38	0.00	603.80	603.95
2X	44+42.38	0.00	603.81	603.92
2Y	44+52.38	0.00	603.80	603.88
2Z	44+62.38	0.00	603.80	603.85
2AA	44+72.38	0.00	603.79	603.82
2AB	44+82.38	0.00	603.77	603.79
2AC	44+92.38	0.00	603.75	603.77
℄ BRG. PIER 3 WB	45+02.38	0.00	603.73	603.75
2AD	45+12.38	0.00	603.70	603.74
2AE	45+22.38	0.00	603.67	603.73
2AF	45+32.38	0.00	603.64	603.73
2AG	45+42.38	0.00	603.60	603.73
2AH	45+52.38	0.00	603.56	603.73
2AI	45+62.38	0.00	603.51	603.73
2AJ	45+72.38	0.00	603.46	603.74
2AK	45+82.38	0.00	603.40	603.74
2AL	45+92.38	0.00	603.35	603.74
2AM	46+02.38	0.00	603.28	603.74
2AN	46+12.38	0.00	603.22	603.73
2AO	46+22.38	0.00	603.15	603.72
2AP	46+32.38	0.00	603.07	603.69
2AQ	46+42.38	0.00	602.99	603.66
2AR	46+52.38	0.00	602.91	603.62
2AS	46+62.38	0.00	602.82	603.56
2AT	46+72.38	0.00	602.73	603.50
2AU	46+82.38	0.00	602.64	603.43
2AV	46+92.38	0.00	602.54	603.35
2AW	47+02.38	0.00	602.44	603.25
2AX	47+12.38	0.00	602.33	603.15
2AY	47+22.38	0.00	602.22	603.03
2AZ	47+32.38	0.00	602.10	602.91

PGL I-80 WB (CONT.)

Location	Station	Offset	Theoretical Grade Elevations	Theoretical Grade Elevations Adjusted For Dead Load Deflection and Grinding
2BA	47+42.38	0.00	601.99	602.77
2BB	47+52.38	0.00	601.86	602.62
2BC	47+62.38	0.00	601.74	602.47
2BD	47+72.38	0.00	601.61	602.30
2BE	47+82.38	0.00	601.47	602.12
2BF	47+92.38	0.00	601.33	601.93
2BG	48+02.38	0.00	601.19	601.74
2BH	48+12.38	0.00	601.04	601.53
2BI	48+22.38	0.00	600.89	601.32
2BJ	48+32.38	0.00	600.74	601.11
2BK	48+42.38	0.00	600.58	600.89
2BL	48+52.38	0.00	600.42	600.67
2BM	48+62.38	0.00	600.25	600.45
2BN	48+72.38	0.00	600.08	600.23
2BO	48+82.38	0.00	599.90	600.01
2BP	48+92.38	0.00	599.73	599.80
2BQ	49+02.38	0.00	599.54	599.59
℄ BRG. PIER 4 WB	49+16.38	0.00	599.28	599.30
2BR	49+26.38	0.00	599.09	599.10
2BS	49+36.38	0.00	598.89	598.91
2BT	49+46.38	0.00	598.69	598.72
2BU	49+56.38	0.00	598.49	598.53
2BV	49+66.38	0.00	598.28	598.34
2BW	49+76.38	0.00	598.07	598.16
2BX	49+86.38	0.00	597.85	597.98
2BY	49+96.38	0.00	597.63	597.80
2BZ	50+06.38	0.00	597.41	597.61
2CA	50+16.38	0.00	597.18	597.43
2CB	50+26.38	0.00	596.95	597.23
2CC	50+36.38	0.00	596.71	597.03
2CD	50+46.38	0.00	596.47	596.83
2CE	50+56.38	0.00	596.22	596.61
2CF	50+66.38	0.00	595.98	596.38
2CG	50+76.38	0.00	595.72	596.15
2CH	50+86.38	0.00	595.47	595.90
2CI	50+96.38	0.00	595.21	595.64
2CJ	51+06.38	0.00	594.94	595.37
2CK	51+16.38	0.00	594.67	595.09
2CL	51+26.38	0.00	594.40	594.80
2CM	51+36.38	0.00	594.13	594.49
2CN	51+46.38	0.00	593.85	594.18
2CO	51+56.38	0.00	593.56	593.86
2CP	51+66.38	0.00	593.27	593.52
2CQ	51+76.38	0.00	592.98	593.18
2CR	51+86.38	0.00	592.69	592.83
2CS	51+96.38	0.00	592.38	592.48
℄ W BRG PIER 5 WB	52+08.38	0.00	592.02	592.04
℄ PIER 5 WB	52+09.88	0.00	591.97	591.99

GIRDER W8

Location	Station	Offset	Theoretical Grade Elevations	Theoretical Grade Elevations Adjusted For Dead Load Deflection and Grinding
℄ PIER 2 WB	42+01.21	9.54	602.47	602.49
℄ E BRG PIER 2 WB	42+02.38	9.54	602.48	602.50
2A	42+12.38	9.54	602.57	602.66
2B	42+22.38	9.54	602.66	602.81
2C	42+32.38	9.54	602.75	602.96
2D	42+42.38	9.54	602.83	603.10
2E	42+52.38	9.54	602.91	603.22
2F	42+62.38	9.54	602.98	603.34
2G	42+72.38	9.54	603.05	603.45
2H	42+82.38	9.54	603.11	603.55
2I	42+92.38	9.54	603.18	603.64
2J	43+02.38	9.54	603.23	603.71
2K	43+12.38	9.54	603.29	603.78
2L	43+22.38	9.54	603.34	603.83
2M	43+32.38	9.54	603.38	603.87
2N	43+42.38	9.54	603.42	603.90
2O	43+52.38	9.54	603.46	603.92
2P	43+62.38	9.54	603.49	603.93
2Q	43+72.38	9.54	603.52	603.93
2R	43+82.38	9.54	603.55	603.92
2S	43+92.38	9.54	603.57	603.90
2T	44+02.38	9.54	603.59	603.87
2U	44+12.38	9.54	603.60	603.84
2V	44+22.38	9.54	603.61	603.80
2W	44+32.38	9.54	603.61	603.76
2X	44+42.38	9.54	603.61	603.73
2Y	44+52.38	9.54	603.61	603.69
2Z	44+62.38	9.54	603.61	603.66
2AA	44+72.38	9.54	603.59	603.63
2AB	44+82.38	9.54	603.58	603.60
2AC	44+92.38	9.54	603.56	603.58
℄ BRG. PIER 3 WB	45+02.38	9.54	603.54	603.56
2AD	45+12.38	9.54	603.51	603.55
2AE	45+22.38	9.54	603.48	603.54
2AF	45+32.38	9.54	603.45	603.54
2AG	45+42.38	9.54	603.41	603.53
2AH	45+52.38	9.54	603.37	603.54
2AI	45+62.38	9.54	603.32	603.54
2AJ	45+72.38	9.54	603.27	603.55
2AK	45+82.38	9.54	603.21	603.55
2AL	45+92.38	9.54	603.15	603.55
2AM	46+02.38	9.54	603.09	603.55
2AN	46+12.38	9.54	603.03	603.54
2AO	46+22.38	9.54	602.95	603.53
2AP	46+32.38	9.54	602.88	603.50
2AQ	46+42.38	9.54	602.80	603.47
2AR	46+52.38	9.54	602.72	603.43
2AS	46+62.38	9.54	602.63	603.37
2AT	46+72.38	9.54	602.54	603.31
2AU	46+82.38	9.54	602.45	603.24
2AV	46+92.38	9.54	602.35	603.16
2AW	47+02.38	9.54	602.25	603.06
2AX	47+12.38	9.54	602.14	602.96
2AY	47+22.38	9.54	602.03	602.84
2AZ	47+32.38	9.54	601.91	602.72

NOTES:

1. All Elevations and Offsets are in feet.
2. Offsets are measured with respect to the I-80 WB PGL. Negative offsets are left and positive are right of the PGL.

GIRDER W8 (CONT.)

Location	Station	Offset	Theoretical Grade Elevations	Theoretical Grade Elevations Adjusted For Dead Load Deflection and Grinding
2BA	47+42.38	9.54	601.79	602.58
2BB	47+52.38	9.54	601.67	602.43
2BC	47+62.38	9.54	601.55	602.27
2BD	47+72.38	9.54	601.41	602.11
2BE	47+82.38	9.54	601.28	601.93
2BF	47+92.38	9.54	601.14	601.74
2BG	48+02.38	9.54	601.00	601.55
2BH	48+12.38	9.54	600.85	601.34
2BI	48+22.38	9.54	600.70	601.13
2BJ	48+32.38	9.54	600.55	600.92
2BK	48+42.38	9.54	600.39	600.70
2BL	48+52.38	9.54	600.23	600.48
2BM	48+62.38	9.54	600.06	600.26
2BN	48+72.38	9.54	599.89	600.04
2BO	48+82.38	9.54	599.71	599.82
2BP	48+92.38	9.54	599.53	599.61
2BQ	49+02.38	9.54	599.35	599.40
℄ BRG. PIER 4 WB	49+16.38	9.54	599.09	599.11
2BR	49+26.38	9.54	598.90	598.91
2BS	49+36.38	9.54	598.70	598.72
2BT	49+46.38	9.54	598.50	598.52
2BU	49+56.38	9.54	598.30	598.34
2BV	49+66.38	9.54	598.09	598.15
2BW	49+76.38	9.54	597.88	597.97
2BX	49+86.38	9.54	597.66	597.79
2BY	49+96.38	9.54	597.44	597.61
2BZ	50+06.38	9.54	597.21	597.42
2CA	50+16.38	9.54	596.99	597.24
2CB	50+26.38	9.54	596.75	597.04
2CC	50+36.38	9.54	596.52	596.84
2CD	50+46.38	9.54	596.28	596.64
2CE	50+56.38	9.54	596.03	596.42
2CF	50+66.38	9.54	595.79	596.19
2CG	50+76.38	9.54	595.53	595.95
2CH	50+86.38	9.54	595.28	595.71
2CI	50+96.38	9.54	595.02	595.45
2CJ	51+06.38	9.54	594.75	595.18
2CK	51+16.38	9.54	594.48	594.90
2CL	51+26.38	9.54	594.21	594.61
2CM	51+36.38	9.54	593.94	594.30
2CN	51+46.38	9.54	593.66	593.99
2CO	51+56.38	9.54	593.37	593.67
2CP	51+66.38	9.54	593.08	593.33
2CQ	51+76.38	9.54	592.79	592.99
2CR	51+86.38	9.54	592.49	592.64
2CS	51+96.38	9.54	592.19	592.29
℄ W BRG PIER 5 WB	52+08.38	9.54	591.83	591.85
℄ PIER 5 WB	52+09.88	9.54	591.78	591.80

INSIDE FACE OF SOUTH PARAPET - WB

Location	Station	Offset	Theoretical Grade Elevations	Theoretical Grade Elevations Adjusted For Dead Load Deflection and Grinding
℄ PIER 2 WB	42+01.21	12.00	602.42	602.44
℄ E BRG PIER 2 WB	42+02.38	12.00	602.43	602.45
2A	42+12.38	12.00	602.52	602.61
2B	42+22.38	12.00	602.61	602.76
2C	42+32.38	12.00	602.70	602.91
2D	42+42.38	12.00	602.78	603.05
2E	42+52.38	12.00	602.86	603.18
2F	42+62.38	12.00	602.93	603.30
2G	42+72.38	12.00	603.00	603.40
2H	42+82.38	12.00	603.06	603.50
2I	42+92.38	12.00	603.13	603.59
2J	43+02.38	12.00	603.18	603.66
2K	43+12.38	12.00	603.24	603.73
2L	43+22.38	12.00	603.29	603.78
2M	43+32.38	12.00	603.33	603.82
2N	43+42.38	12.00	603.37	603.85
2O	43+52.38	12.00	603.41	603.87
2P	43+62.38	12.00	603.44	603.88
2Q	43+72.38	12.00	603.47	603.88
2R	43+82.38	12.00	603.50	603.87
2S	43+92.38	12.00	603.52	603.85
2T	44+02.38	12.00	603.54	603.82
2U	44+12.38	12.00	603.55	603.79
2V	44+22.38	12.00	603.56	603.75
2W	44+32.38	12.00	603.56	603.71
2X	44+42.38	12.00	603.57	603.68
2Y	44+52.38	12.00	603.56	603.64
2Z	44+62.38	12.00	603.56	603.61
2AA	44+72.38	12.00	603.55	603.58
2AB	44+82.38	12.00	603.53	603.55
2AC	44+92.38	12.00	603.51	603.53
℄ BRG. PIER 3 WB	45+02.38	12.00	603.49	603.51
2AD	45+12.38	12.00	603.46	603.50
2AE	45+22.38	12.00	603.43	603.49
2AF	45+32.38	12.00	603.40	603.49
2AG	45+42.38	12.00	603.36	603.49
2AH	45+52.38	12.00	603.32	603.49
2AI	45+62.38	12.00	603.27	603.49
2AJ	45+72.38	12.00	603.22	603.50
2AK	45+82.38	12.00	603.16	603.50
2AL	45+92.38	12.00	603.11	603.50
2AM	46+02.38	12.00	603.04	603.50
2AN	46+12.38	12.00	602.98	603.49
2AO	46+22.38	12.00	602.91	603.48
2AP	46+32.38	12.00	602.83	603.45
2AQ	46+42.38	12.00	602.75	603.42
2AR	46+52.38	12.00	602.67	603.38
2AS	46+62.38	12.00	602.58	603.32
2AT	46+72.38	12.00	602.49	603.26
2AU	46+82.38	12.00	602.40	603.19
2AV	46+92.38	12.00	602.30	603.11
2AW	47+02.38	12.00	602.20	603.01
2AX	47+12.38	12.00	602.09	602.91
2AY	47+22.38	12.00	601.98	602.79
2AZ	47+32.38	12.00	601.86	602.67

INSIDE FACE OF SOUTH PARAPET - WB (CONT.)

Location	Station	Offset	Theoretical Grade Elevations	Theoretical Grade Elevations Adjusted For Dead Load Deflection and Grinding
2BA	47+42.38	12.00	601.75	602.53
2BB	47+52.38	12.00	601.62	602.38
2BC	47+62.38	12.00	601.50	602.23
2BD	47+72.38	12.00	601.37	602.06
2BE	47+82.38	12.00	601.23	601.88
2BF	47+92.38	12.00	601.09	601.69
2BG	48+02.38	12.00	600.95	601.50
2BH	48+12.38	12.00	600.80	601.29
2BI	48+22.38	12.00	600.65	601.08
2BJ	48+32.38	12.00	600.50	600.87
2BK	48+42.38	12.00	600.34	600.65
2BL	48+52.38	12.00	600.18	600.43
2BM	48+62.38	12.00	600.01	600.21
2BN	48+72.38	12.00	599.84	599.99
2BO	48+82.38	12.00	599.66	599.77
2BP	48+92.38	12.00	599.49	599.56
2BQ	49+02.38	12.00	599.30	599.35
℄ BRG. PIER 4 WB	49+16.38	12.00	599.04	599.06
2BR	49+26.38	12.00	598.85	598.86
2BS	49+36.38	12.00	598.65	598.67
2BT	49+46.38	12.00	598.45	598.48
2BU	49+56.38	12.00	598.25	598.29
2BV	49+66.38	12.00	598.04	598.10
2BW	49+76.38	12.00	597.83	597.92
2BX	49+86.38	12.00	597.61	597.74
2BY	49+96.38	12.00	597.39	597.56
2BZ	50+06.38	12.00	597.17	597.37
2CA	50+16.38	12.00	596.94	597.19
2CB	50+26.38	12.00	596.71	596.99
2CC	50+36.38	12.00	596.47	596.79
2CD	50+46.38	12.00	596.23	596.59
2CE	50+56.38	12.00	595.98	596.37
2CF	50+66.38	12.00	595.74	596.14
2CG	50+76.38	12.00	595.48	595.91
2CH	50+86.38	12.00	595.23	595.66
2CI	50+96.38	12.00	594.97	595.40
2CJ	51+06.38	12.00	594.70	595.13
2CK	51+16.38	12.00	594.43	594.85
2CL	51+26.38	12.00	594.16	594.56
2CM	51+36.38	12.00	593.89	594.25
2CN	51+46.38	12.00	593.61	593.94
2CO	51+56.38	12.00	593.32	593.62
2CP	51+66.38	12.00	593.03	593.28
2CQ	51+76.38	12.00	592.74	592.94
2CR	51+86.38	12.00	592.45	592.59
2CS	51+96.38	12.00	592.14	592.24
℄ W BRG PIER 5 WB	52+08.38	12.00	591.78	591.80
℄ PIER 5 WB	52+09.88	12.00	591.73	591.75

NOTES:

1. All Elevations and Offsets are in feet.
2. Offsets are measured with respect to the I-80 WB PGL. Negative offsets are left and positive are right of the PGL.

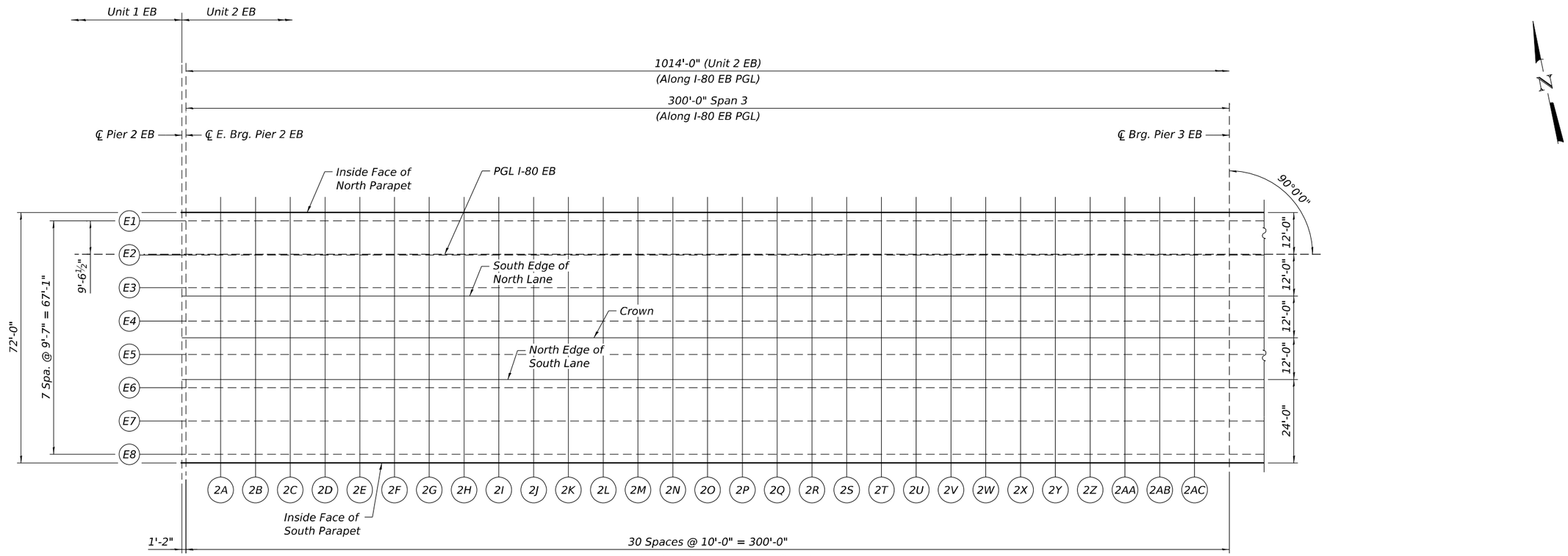

PARTIAL PLAN - UNIT 2 EB

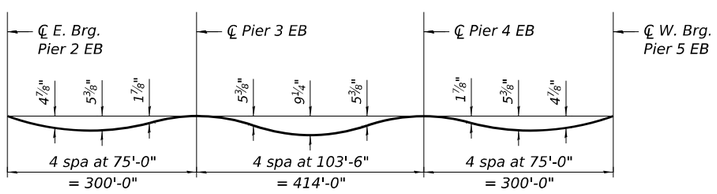

DEAD LOAD DEFLECTION DIAGRAM

(Includes weight of concrete only.) See Note 5.

Note:
The above deflections are not to be used in the field if the engineer is working from the grade elevations adjusted for dead load deflections and grinding as shown on sheets S-57 to S-65.

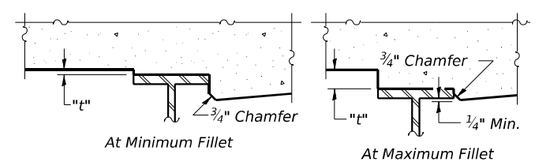

To determine "t": After all structural steel has been erected, elevations of the top flanges of the beams shall be taken at intervals shown. These elevations subtracted from the "Theoretical Grade Elevations Adjusted for Dead Load Deflection and Grinding" shown on sheets S-57 to S-65, minus the initial slab thickness prior to grinding, equals the fillet heights "t" above top flange of beams.

The slab is to be ground after curing to achieve smoothness, but the slab is not to be ground to elevations below the "Theoretical Grade Elevations" shown on sheets S-57 to S-65. For grinding the deck, see Special Provisions.

FILLET HEIGHTS

NOTES:

1. The dead load deflections shown in the diagram and used for fillet height determination are based on the Deck Pouring Sequence shown on sheet S-124.
2. If the Contractor elects to use a different pour placement/hardening schedule, then the deflections and fillet heights shall be re-calculated.
3. The cost of re-calculating deflections and adjusting fillet heights shall be included in the cost of Concrete Superstructure.
4. Up to 1/4 inch to be ground off the bridge deck and the bridge approach slabs. The Profile Grade shows the final grade after grinding.
5. The dead load deflections used to compute the "Theoretical Grade Elevations Adjusted for Dead Load Deflections and Grinding" shown on sheets S-56 to S-65 include the weight of deck concrete and the parapets. The net effects of temporary formwork, assumed to be 10 PSF of deck surface area, placed on the noncomposite structure and later removed from the composite structure are included in these theoretical deflections.

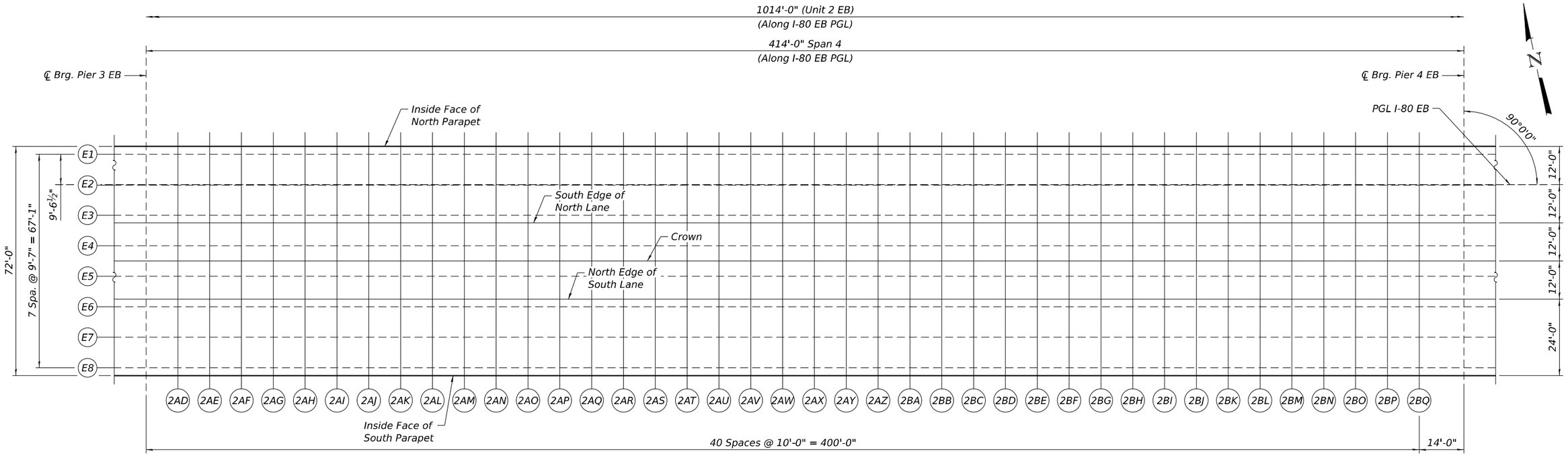

PARTIAL PLAN - UNIT 2 EB

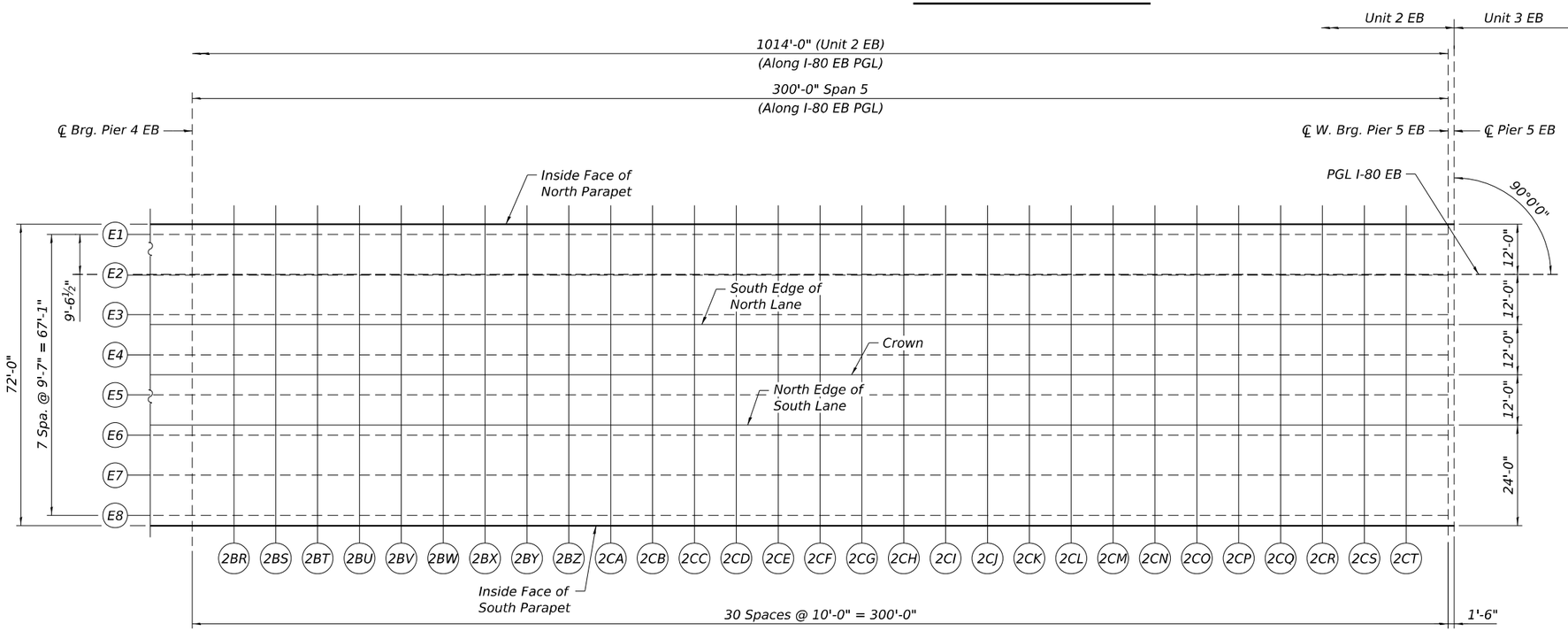

PARTIAL PLAN - UNIT 2 EB

MODEL: Default
FILE NAME: pw://transystems-pw.bentley.com:transyscorp-pw1-hosted/Documents/Projects_2018/CH401/401180022/03-WSP/CAD/62R23-RB-1/Sheets/Structural/0998309-62R23-S277-DEE202.dgn

WSP USA Inc.
30 N. LASALLE STREET
SUITE 4200
CHICAGO, IL 60602
TEL: (312) 782-8150
FAX: (312) 782-1684

USER NAME = USSJ696614	DESIGNED - LAS	REVISED -	
	CHECKED - PJL	REVISED -	
PLOT SCALE = 32:0 ':" / in.	DRAWN - GM	REVISED -	
PLOT DATE = 11/5/2025	CHECKED - LAS	REVISED -	

STATE OF ILLINOIS
DEPARTMENT OF TRANSPORTATION

TOP OF SLAB ELEVATION PLAN 2 - UNIT 2 EB
STRUCTURE NUMBER 099-8309 WB AND 099-8325 EB

SHEET S-55 OF S-333 SHEETS

F.A.I RTE.	SECTION	COUNTY	TOTAL SHEETS	SHEET NO.
I-80	FAI 80 21 STRUCTURE 2	WILL	1230	636
		CONTRACT NO. 62R23		
	ILLINOIS	FED. AID PROJECT		

INSIDE FACE OF NORTH PARAPET - EB

Location	Station	Offset	Theoretical Grade Elevations	Theoretical Grade Elevations Adjusted For Dead Load Deflection and Grinding
℄ PIER 2 EB	41+68.45	-12.00	602.08	602.10
℄ E BRG PIER 2 EB	41+69.62	-12.00	602.10	602.12
2A	41+79.62	-12.00	602.20	602.29
2B	41+89.62	-12.00	602.31	602.46
2C	41+99.62	-12.00	602.40	602.62
2D	42+09.62	-12.00	602.50	602.77
2E	42+19.62	-12.00	602.59	602.91
2F	42+29.62	-12.00	602.67	603.04
2G	42+39.62	-12.00	602.76	603.17
2H	42+49.62	-12.00	602.84	603.28
2I	42+59.62	-12.00	602.91	603.38
2J	42+69.62	-12.00	602.98	603.47
2K	42+79.62	-12.00	603.05	603.55
2L	42+89.62	-12.00	603.11	603.61
2M	42+99.62	-12.00	603.17	603.67
2N	43+09.62	-12.00	603.22	603.71
2O	43+19.62	-12.00	603.27	603.74
2P	43+29.62	-12.00	603.32	603.76
2Q	43+39.62	-12.00	603.36	603.77
2R	43+49.62	-12.00	603.40	603.78
2S	43+59.62	-12.00	603.43	603.77
2T	43+69.62	-12.00	603.46	603.76
2U	43+79.62	-12.00	603.49	603.74
2V	43+89.62	-12.00	603.51	603.71
2W	43+99.62	-12.00	603.53	603.69
2X	44+09.62	-12.00	603.55	603.66
2Y	44+19.62	-12.00	603.56	603.64
2Z	44+29.62	-12.00	603.56	603.62
2AA	44+39.62	-12.00	603.57	603.60
2AB	44+49.62	-12.00	603.56	603.59
2AC	44+59.62	-12.00	603.56	603.58
℄ BRG. PIER 3 EB	44+69.62	-12.00	603.55	603.57
2AD	44+79.62	-12.00	603.54	603.57
2AE	44+89.62	-12.00	603.52	603.58
2AF	44+99.62	-12.00	603.50	603.58
2AG	45+09.62	-12.00	603.47	603.59
2AH	45+19.62	-12.00	603.44	603.61
2AI	45+29.62	-12.00	603.41	603.62
2AJ	45+39.62	-12.00	603.37	603.64
2AK	45+49.62	-12.00	603.33	603.66
2AL	45+59.62	-12.00	603.28	603.67
2AM	45+69.62	-12.00	603.23	603.68
2AN	45+79.62	-12.00	603.18	603.68
2AO	45+89.62	-12.00	603.12	603.68
2AP	45+99.62	-12.00	603.06	603.67
2AQ	46+09.62	-12.00	602.99	603.65
2AR	46+19.62	-12.00	602.93	603.61
2AS	46+29.62	-12.00	602.85	603.57
2AT	46+39.62	-12.00	602.77	603.52
2AU	46+49.62	-12.00	602.69	603.46
2AV	46+59.62	-12.00	602.61	603.39
2AW	46+69.62	-12.00	602.52	603.31
2AX	46+79.62	-12.00	602.42	603.22
2AY	46+89.62	-12.00	602.33	603.12
2AZ	46+99.62	-12.00	602.22	603.00

INSIDE FACE OF NORTH PARAPET - EB (CONT.)

Location	Station	Offset	Theoretical Grade Elevations	Theoretical Grade Elevations Adjusted For Dead Load Deflection and Grinding
2BA	47+09.62	-12.00	602.12	602.88
2BB	47+19.62	-12.00	602.01	602.74
2BC	47+29.62	-12.00	601.90	602.60
2BD	47+39.62	-12.00	601.78	602.44
2BE	47+49.62	-12.00	601.66	602.28
2BF	47+59.62	-12.00	601.53	602.11
2BG	47+69.62	-12.00	601.40	601.92
2BH	47+79.62	-12.00	601.27	601.74
2BI	47+89.62	-12.00	601.13	601.54
2BJ	47+99.62	-12.00	600.99	601.34
2BK	48+09.62	-12.00	600.84	601.14
2BL	48+19.62	-12.00	600.69	600.93
2BM	48+29.62	-12.00	600.54	600.73
2BN	48+39.62	-12.00	600.38	600.52
2BO	48+49.62	-12.00	600.22	600.32
2BP	48+59.62	-12.00	600.06	600.12
2BQ	48+69.62	-12.00	599.89	599.93
℄ BRG. PIER 4 EB	48+83.62	-12.00	599.64	599.66
2BR	48+93.62	-12.00	599.46	599.48
2BS	49+03.62	-12.00	599.28	599.30
2BT	49+13.62	-12.00	599.09	599.13
2BU	49+23.62	-12.00	598.90	598.96
2BV	49+33.62	-12.00	598.71	598.79
2BW	49+43.62	-12.00	598.51	598.62
2BX	49+53.62	-12.00	598.30	598.46
2BY	49+63.62	-12.00	598.10	598.30
2BZ	49+73.62	-12.00	597.89	598.13
2CA	49+83.62	-12.00	597.67	597.96
2CB	49+93.62	-12.00	597.45	597.79
2CC	50+03.62	-12.00	597.23	597.61
2CD	50+13.62	-12.00	597.00	597.42
2CE	50+23.62	-12.00	596.77	597.22
2CF	50+33.62	-12.00	596.53	597.00
2CG	50+43.62	-12.00	596.30	596.78
2CH	50+53.62	-12.00	596.05	596.55
2CI	50+63.62	-12.00	595.81	596.31
2CJ	50+73.62	-12.00	595.55	596.05
2CK	50+83.62	-12.00	595.30	595.79
2CL	50+93.62	-12.00	595.04	595.51
2CM	51+03.62	-12.00	594.78	595.22
2CN	51+13.62	-12.00	594.51	594.92
2CO	51+23.62	-12.00	594.24	594.61
2CP	51+33.62	-12.00	593.96	594.29
2CQ	51+43.62	-12.00	593.68	593.95
2CR	51+53.62	-12.00	593.40	593.61
2CS	51+63.62	-12.00	593.11	593.26
2CT	51+73.62	-12.00	592.82	592.91
℄ W BRG PIER 5 EB	51+83.62	-12.00	592.53	592.55
℄ PIER 5 EB	51+85.12	-12.00	592.48	592.50

GIRDER E1

Location	Station	Offset	Theoretical Grade Elevations	Theoretical Grade Elevations Adjusted For Dead Load Deflection and Grinding
℄ PIER 2 EB	41+68.45	-9.54	602.13	602.15
℄ E BRG PIER 2 EB	41+69.62	-9.54	602.15	602.17
2A	41+79.62	-9.54	602.25	602.34
2B	41+89.62	-9.54	602.35	602.50
2C	41+99.62	-9.54	602.45	602.66
2D	42+09.62	-9.54	602.55	602.82
2E	42+19.62	-9.54	602.64	602.96
2F	42+29.62	-9.54	602.72	603.09
2G	42+39.62	-9.54	602.81	603.22
2H	42+49.62	-9.54	602.88	603.33
2I	42+59.62	-9.54	602.96	603.43
2J	42+69.62	-9.54	603.03	603.52
2K	42+79.62	-9.54	603.10	603.59
2L	42+89.62	-9.54	603.16	603.66
2M	42+99.62	-9.54	603.22	603.72
2N	43+09.62	-9.54	603.27	603.76
2O	43+19.62	-9.54	603.32	603.79
2P	43+29.62	-9.54	603.37	603.81
2Q	43+39.62	-9.54	603.41	603.82
2R	43+49.62	-9.54	603.45	603.83
2S	43+59.62	-9.54	603.48	603.82
2T	43+69.62	-9.54	603.51	603.81
2U	43+79.62	-9.54	603.54	603.79
2V	43+89.62	-9.54	603.56	603.76
2W	43+99.62	-9.54	603.58	603.74
2X	44+09.62	-9.54	603.60	603.71
2Y	44+19.62	-9.54	603.61	603.69
2Z	44+29.62	-9.54	603.61	603.67
2AA	44+39.62	-9.54	603.61	603.65
2AB	44+49.62	-9.54	603.61	603.64
2AC	44+59.62	-9.54	603.61	603.63
℄ BRG. PIER 3 EB	44+69.62	-9.54	603.60	603.62
2AD	44+79.62	-9.54	603.58	603.62
2AE	44+89.62	-9.54	603.57	603.62
2AF	44+99.62	-9.54	603.55	603.63
2AG	45+09.62	-9.54	603.52	603.64
2AH	45+19.62	-9.54	603.49	603.66
2AI	45+29.62	-9.54	603.46	603.67
2AJ	45+39.62	-9.54	603.42	603.69
2AK	45+49.62	-9.54	603.38	603.70
2AL	45+59.62	-9.54	603.33	603.72
2AM	45+69.62	-9.54	603.28	603.73
2AN	45+79.62	-9.54	603.23	603.73
2AO	45+89.62	-9.54	603.17	603.73
2AP	45+99.62	-9.54	603.11	603.71
2AQ	46+09.62	-9.54	603.04	603.69
2AR	46+19.62	-9.54	602.97	603.66
2AS	46+29.62	-9.54	602.90	603.62
2AT	46+39.62	-9.54	602.82	603.57
2AU	46+49.62	-9.54	602.74	603.51
2AV	46+59.62	-9.54	602.66	603.44
2AW	46+69.62	-9.54	602.57	603.36
2AX	46+79.62	-9.54	602.47	603.27
2AY	46+89.62	-9.54	602.38	603.17
2AZ	46+99.62	-9.54	602.27	603.05

NOTES:

1. All Elevations and Offsets are in feet.
2. Offsets are measured with respect to the I-80 EB PGL. Negative offsets are left and positive are right of the PGL.

GIRDER E1 (CONT.)

Location	Station	Offset	Theoretical Grade Elevations	Theoretical Grade Elevations Adjusted For Dead Load Deflection and Grinding
2BA	47+09.62	-9.54	602.17	602.93
2BB	47+19.62	-9.54	602.06	602.79
2BC	47+29.62	-9.54	601.95	602.65
2BD	47+39.62	-9.54	601.83	602.49
2BE	47+49.62	-9.54	601.71	602.33
2BF	47+59.62	-9.54	601.58	602.16
2BG	47+69.62	-9.54	601.45	601.97
2BH	47+79.62	-9.54	601.32	601.78
2BI	47+89.62	-9.54	601.18	601.59
2BJ	47+99.62	-9.54	601.04	601.39
2BK	48+09.62	-9.54	600.89	601.18
2BL	48+19.62	-9.54	600.74	600.98
2BM	48+29.62	-9.54	600.59	600.77
2BN	48+39.62	-9.54	600.43	600.57
2BO	48+49.62	-9.54	600.27	600.37
2BP	48+59.62	-9.54	600.10	600.17
2BQ	48+69.62	-9.54	599.94	599.98
℄ BRG. PIER 4 EB	48+83.62	-9.54	599.69	599.71
2BR	48+93.62	-9.54	599.51	599.53
2BS	49+03.62	-9.54	599.33	599.35
2BT	49+13.62	-9.54	599.14	599.18
2BU	49+23.62	-9.54	598.95	599.01
2BV	49+33.62	-9.54	598.76	598.84
2BW	49+43.62	-9.54	598.56	598.67
2BX	49+53.62	-9.54	598.35	598.51
2BY	49+63.62	-9.54	598.15	598.35
2BZ	49+73.62	-9.54	597.93	598.18
2CA	49+83.62	-9.54	597.72	598.01
2CB	49+93.62	-9.54	597.50	597.84
2CC	50+03.62	-9.54	597.28	597.66
2CD	50+13.62	-9.54	597.05	597.46
2CE	50+23.62	-9.54	596.82	597.26
2CF	50+33.62	-9.54	596.58	597.05
2CG	50+43.62	-9.54	596.34	596.83
2CH	50+53.62	-9.54	596.10	596.60
2CI	50+63.62	-9.54	595.85	596.36
2CJ	50+73.62	-9.54	595.60	596.10
2CK	50+83.62	-9.54	595.35	595.84
2CL	50+93.62	-9.54	595.09	595.56
2CM	51+03.62	-9.54	594.83	595.27
2CN	51+13.62	-9.54	594.56	594.97
2CO	51+23.62	-9.54	594.29	594.66
2CP	51+33.62	-9.54	594.01	594.33
2CQ	51+43.62	-9.54	593.73	594.00
2CR	51+53.62	-9.54	593.45	593.66
2CS	51+63.62	-9.54	593.16	593.31
2CT	51+73.62	-9.54	592.87	592.96
℄ W BRG PIER 5 EB	51+83.62	-9.54	592.58	592.60
℄ PIER 5 EB	51+85.12	-9.54	592.53	592.55

PGL I-80 EB

Location	Station	Offset	Theoretical Grade Elevations	Theoretical Grade Elevations Adjusted For Dead Load Deflection and Grinding
℄ PIER 2 EB	41+68.45	0.00	602.32	602.34
℄ E BRG PIER 2 EB	41+69.62	0.00	602.34	602.36
2A	41+79.62	0.00	602.44	602.53
2B	41+89.62	0.00	602.55	602.70
2C	41+99.62	0.00	602.64	602.86
2D	42+09.62	0.00	602.74	603.01
2E	42+19.62	0.00	602.83	603.15
2F	42+29.62	0.00	602.91	603.28
2G	42+39.62	0.00	603.00	603.41
2H	42+49.62	0.00	603.08	603.52
2I	42+59.62	0.00	603.15	603.62
2J	42+69.62	0.00	603.22	603.71
2K	42+79.62	0.00	603.29	603.79
2L	42+89.62	0.00	603.35	603.85
2M	42+99.62	0.00	603.41	603.91
2N	43+09.62	0.00	603.46	603.95
2O	43+19.62	0.00	603.51	603.98
2P	43+29.62	0.00	603.56	604.00
2Q	43+39.62	0.00	603.60	604.01
2R	43+49.62	0.00	603.64	604.02
2S	43+59.62	0.00	603.67	604.01
2T	43+69.62	0.00	603.70	604.00
2U	43+79.62	0.00	603.73	603.98
2V	43+89.62	0.00	603.75	603.95
2W	43+99.62	0.00	603.77	603.93
2X	44+09.62	0.00	603.79	603.90
2Y	44+19.62	0.00	603.80	603.88
2Z	44+29.62	0.00	603.80	603.86
2AA	44+39.62	0.00	603.81	603.84
2AB	44+49.62	0.00	603.80	603.83
2AC	44+59.62	0.00	603.80	603.82
℄ BRG. PIER 3 EB	44+69.62	0.00	603.79	603.81
2AD	44+79.62	0.00	603.78	603.81
2AE	44+89.62	0.00	603.76	603.82
2AF	44+99.62	0.00	603.74	603.82
2AG	45+09.62	0.00	603.71	603.83
2AH	45+19.62	0.00	603.68	603.85
2AI	45+29.62	0.00	603.65	603.86
2AJ	45+39.62	0.00	603.61	603.88
2AK	45+49.62	0.00	603.57	603.90
2AL	45+59.62	0.00	603.52	603.91
2AM	45+69.62	0.00	603.47	603.92
2AN	45+79.62	0.00	603.42	603.92
2AO	45+89.62	0.00	603.36	603.92
2AP	45+99.62	0.00	603.30	603.91
2AQ	46+09.62	0.00	603.23	603.89
2AR	46+19.62	0.00	603.17	603.85
2AS	46+29.62	0.00	603.09	603.81
2AT	46+39.62	0.00	603.01	603.76
2AU	46+49.62	0.00	602.93	603.70
2AV	46+59.62	0.00	602.85	603.63
2AW	46+69.62	0.00	602.76	603.55
2AX	46+79.62	0.00	602.66	603.46
2AY	46+89.62	0.00	602.57	603.36
2AZ	46+99.62	0.00	602.46	603.24

PGL I-80 EB (CONT.)

Location	Station	Offset	Theoretical Grade Elevations	Theoretical Grade Elevations Adjusted For Dead Load Deflection and Grinding
2BA	47+09.62	0.00	602.36	603.12
2BB	47+19.62	0.00	602.25	602.98
2BC	47+29.62	0.00	602.14	602.84
2BD	47+39.62	0.00	602.02	602.68
2BE	47+49.62	0.00	601.90	602.52
2BF	47+59.62	0.00	601.77	602.35
2BG	47+69.62	0.00	601.64	602.16
2BH	47+79.62	0.00	601.51	601.98
2BI	47+89.62	0.00	601.37	601.78
2BJ	47+99.62	0.00	601.23	601.58
2BK	48+09.62	0.00	601.08	601.38
2BL	48+19.62	0.00	600.93	601.17
2BM	48+29.62	0.00	600.78	600.97
2BN	48+39.62	0.00	600.62	600.76
2BO	48+49.62	0.00	600.46	600.56
2BP	48+59.62	0.00	600.30	600.36
2BQ	48+69.62	0.00	600.13	600.17
℄ BRG. PIER 4 EB	48+83.62	0.00	599.88	599.90
2BR	48+93.62	0.00	599.70	599.72
2BS	49+03.62	0.00	599.52	599.54
2BT	49+13.62	0.00	599.33	599.37
2BU	49+23.62	0.00	599.14	599.20
2BV	49+33.62	0.00	598.95	599.03
2BW	49+43.62	0.00	598.75	598.86
2BX	49+53.62	0.00	598.54	598.70
2BY	49+63.62	0.00	598.34	598.54
2BZ	49+73.62	0.00	598.13	598.37
2CA	49+83.62	0.00	597.91	598.20
2CB	49+93.62	0.00	597.69	598.03
2CC	50+03.62	0.00	597.47	597.85
2CD	50+13.62	0.00	597.24	597.66
2CE	50+23.62	0.00	597.01	597.46
2CF	50+33.62	0.00	596.77	597.24
2CG	50+43.62	0.00	596.54	597.02
2CH	50+53.62	0.00	596.29	596.79
2CI	50+63.62	0.00	596.05	596.55
2CJ	50+73.62	0.00	595.79	596.29
2CK	50+83.62	0.00	595.54	596.03
2CL	50+93.62	0.00	595.28	595.75
2CM	51+03.62	0.00	595.02	595.46
2CN	51+13.62	0.00	594.75	595.16
2CO	51+23.62	0.00	594.48	594.85
2CP	51+33.62	0.00	594.20	594.53
2CQ	51+43.62	0.00	593.92	594.19
2CR	51+53.62	0.00	593.64	593.85
2CS	51+63.62	0.00	593.35	593.50
2CT	51+73.62	0.00	593.06	593.15
℄ W BRG PIER 5 EB	51+83.62	0.00	592.77	592.79
℄ PIER 5 EB	51+85.12	0.00	592.72	592.74

NOTES:

1. All Elevations and Offsets are in feet.
2. Offsets are measured with respect to the I-80 EB PGL. Negative offsets are left and positive are right of the PGL.

GIRDER E2

Location	Station	Offset	Theoretical Grade Elevations	Theoretical Grade Elevations Adjusted For Dead Load Deflection and Grinding
℄ PIER 2 EB	41+68.45	0.04	602.32	602.35
℄ E BRG PIER 2 EB	41+69.62	0.04	602.34	602.36
2A	41+79.62	0.04	602.44	602.53
2B	41+89.62	0.04	602.55	602.70
2C	41+99.62	0.04	602.64	602.86
2D	42+09.62	0.04	602.74	603.01
2E	42+19.62	0.04	602.83	603.15
2F	42+29.62	0.04	602.92	603.28
2G	42+39.62	0.04	603.00	603.41
2H	42+49.62	0.04	603.08	603.52
2I	42+59.62	0.04	603.15	603.62
2J	42+69.62	0.04	603.22	603.71
2K	42+79.62	0.04	603.29	603.79
2L	42+89.62	0.04	603.35	603.85
2M	42+99.62	0.04	603.41	603.91
2N	43+09.62	0.04	603.46	603.95
2O	43+19.62	0.04	603.51	603.98
2P	43+29.62	0.04	603.56	604.00
2Q	43+39.62	0.04	603.60	604.02
2R	43+49.62	0.04	603.64	604.02
2S	43+59.62	0.04	603.68	604.01
2T	43+69.62	0.04	603.71	604.00
2U	43+79.62	0.04	603.73	603.98
2V	43+89.62	0.04	603.75	603.95
2W	43+99.62	0.04	603.77	603.93
2X	44+09.62	0.04	603.79	603.90
2Y	44+19.62	0.04	603.80	603.88
2Z	44+29.62	0.04	603.80	603.86
2AA	44+39.62	0.04	603.81	603.84
2AB	44+49.62	0.04	603.80	603.83
2AC	44+59.62	0.04	603.80	603.82
℄ BRG. PIER 3 EB	44+69.62	0.04	603.79	603.81
2AD	44+79.62	0.04	603.78	603.81
2AE	44+89.62	0.04	603.76	603.82
2AF	44+99.62	0.04	603.74	603.82
2AG	45+09.62	0.04	603.71	603.83
2AH	45+19.62	0.04	603.68	603.85
2AI	45+29.62	0.04	603.65	603.86
2AJ	45+39.62	0.04	603.61	603.88
2AK	45+49.62	0.04	603.57	603.90
2AL	45+59.62	0.04	603.52	603.91
2AM	45+69.62	0.04	603.47	603.92
2AN	45+79.62	0.04	603.42	603.92
2AO	45+89.62	0.04	603.36	603.92
2AP	45+99.62	0.04	603.30	603.91
2AQ	46+09.62	0.04	603.24	603.89
2AR	46+19.62	0.04	603.17	603.85
2AS	46+29.62	0.04	603.09	603.81
2AT	46+39.62	0.04	603.02	603.77
2AU	46+49.62	0.04	602.93	603.70
2AV	46+59.62	0.04	602.85	603.63
2AW	46+69.62	0.04	602.76	603.55
2AX	46+79.62	0.04	602.66	603.46
2AY	46+89.62	0.04	602.57	603.36
2AZ	46+99.62	0.04	602.47	603.24

GIRDER E2 (CONT.)

Location	Station	Offset	Theoretical Grade Elevations	Theoretical Grade Elevations Adjusted For Dead Load Deflection and Grinding
2BA	47+09.62	0.04	602.36	603.12
2BB	47+19.62	0.04	602.25	602.98
2BC	47+29.62	0.04	602.14	602.84
2BD	47+39.62	0.04	602.02	602.69
2BE	47+49.62	0.04	601.90	602.52
2BF	47+59.62	0.04	601.77	602.35
2BG	47+69.62	0.04	601.64	602.17
2BH	47+79.62	0.04	601.51	601.98
2BI	47+89.62	0.04	601.37	601.78
2BJ	47+99.62	0.04	601.23	601.58
2BK	48+09.62	0.04	601.08	601.38
2BL	48+19.62	0.04	600.93	601.17
2BM	48+29.62	0.04	600.78	600.97
2BN	48+39.62	0.04	600.62	600.76
2BO	48+49.62	0.04	600.46	600.56
2BP	48+59.62	0.04	600.30	600.37
2BQ	48+69.62	0.04	600.13	600.17
℄ BRG. PIER 4 EB	48+83.62	0.04	599.88	599.90
2BR	48+93.62	0.04	599.70	599.72
2BS	49+03.62	0.04	599.52	599.54
2BT	49+13.62	0.04	599.33	599.37
2BU	49+23.62	0.04	599.14	599.20
2BV	49+33.62	0.04	598.95	599.03
2BW	49+43.62	0.04	598.75	598.86
2BX	49+53.62	0.04	598.54	598.70
2BY	49+63.62	0.04	598.34	598.54
2BZ	49+73.62	0.04	598.13	598.37
2CA	49+83.62	0.04	597.91	598.20
2CB	49+93.62	0.04	597.69	598.03
2CC	50+03.62	0.04	597.47	597.85
2CD	50+13.62	0.04	597.24	597.66
2CE	50+23.62	0.04	597.01	597.46
2CF	50+33.62	0.04	596.78	597.25
2CG	50+43.62	0.04	596.54	597.02
2CH	50+53.62	0.04	596.29	596.79
2CI	50+63.62	0.04	596.05	596.55
2CJ	50+73.62	0.04	595.79	596.30
2CK	50+83.62	0.04	595.54	596.03
2CL	50+93.62	0.04	595.28	595.75
2CM	51+03.62	0.04	595.02	595.46
2CN	51+13.62	0.04	594.75	595.16
2CO	51+23.62	0.04	594.48	594.85
2CP	51+33.62	0.04	594.20	594.53
2CQ	51+43.62	0.04	593.92	594.19
2CR	51+53.62	0.04	593.64	593.85
2CS	51+63.62	0.04	593.35	593.51
2CT	51+73.62	0.04	593.06	593.15
℄ W BRG PIER 5 EB	51+83.62	0.04	592.77	592.79
℄ PIER 5 EB	51+85.12	0.04	592.72	592.74

GIRDER E3

Location	Station	Offset	Theoretical Grade Elevations	Theoretical Grade Elevations Adjusted For Dead Load Deflection and Grinding
℄ PIER 2 EB	41+68.45	9.63	602.52	602.54
℄ E BRG PIER 2 EB	41+69.62	9.63	602.53	602.55
2A	41+79.62	9.63	602.64	602.72
2B	41+89.62	9.63	602.74	602.89
2C	41+99.62	9.63	602.84	603.05
2D	42+09.62	9.63	602.93	603.20
2E	42+19.62	9.63	603.02	603.34
2F	42+29.62	9.63	603.11	603.48
2G	42+39.62	9.63	603.19	603.60
2H	42+49.62	9.63	603.27	603.71
2I	42+59.62	9.63	603.34	603.81
2J	42+69.62	9.63	603.41	603.90
2K	42+79.62	9.63	603.48	603.98
2L	42+89.62	9.63	603.54	604.04
2M	42+99.62	9.63	603.60	604.10
2N	43+09.62	9.63	603.65	604.14
2O	43+19.62	9.63	603.71	604.17
2P	43+29.62	9.63	603.75	604.20
2Q	43+39.62	9.63	603.79	604.21
2R	43+49.62	9.63	603.83	604.21
2S	43+59.62	9.63	603.87	604.20
2T	43+69.62	9.63	603.90	604.19
2U	43+79.62	9.63	603.92	604.17
2V	43+89.62	9.63	603.95	604.15
2W	43+99.62	9.63	603.96	604.12
2X	44+09.62	9.63	603.98	604.09
2Y	44+19.62	9.63	603.99	604.07
2Z	44+29.62	9.63	604.00	604.05
2AA	44+39.62	9.63	604.00	604.03
2AB	44+49.62	9.63	604.00	604.02
2AC	44+59.62	9.63	603.99	604.01
℄ BRG. PIER 3 EB	44+69.62	9.63	603.98	604.00
2AD	44+79.62	9.63	603.97	604.00
2AE	44+89.62	9.63	603.95	604.01
2AF	44+99.62	9.63	603.93	604.02
2AG	45+09.62	9.63	603.90	604.03
2AH	45+19.62	9.63	603.87	604.04
2AI	45+29.62	9.63	603.84	604.05
2AJ	45+39.62	9.63	603.80	604.07
2AK	45+49.62	9.63	603.76	604.09
2AL	45+59.62	9.63	603.72	604.10
2AM	45+69.62	9.63	603.67	604.11
2AN	45+79.62	9.63	603.61	604.11
2AO	45+89.62	9.63	603.55	604.11
2AP	45+99.62	9.63	603.49	604.10
2AQ	46+09.62	9.63	603.43	604.08
2AR	46+19.62	9.63	603.36	604.05
2AS	46+29.62	9.63	603.28	604.01
2AT	46+39.62	9.63	603.21	603.96
2AU	46+49.62	9.63	603.13	603.90
2AV	46+59.62	9.63	603.04	603.82
2AW	46+69.62	9.63	602.95	603.74
2AX	46+79.62	9.63	602.86	603.65
2AY	46+89.62	9.63	602.76	603.55
2AZ	46+99.62	9.63	602.66	603.44

NOTES:

1. All Elevations and Offsets are in feet.
2. Offsets are measured with respect to the I-80 EB PGL. Negative offsets are left and positive are right of the PGL.

GIRDER E3 (CONT.)

Location	Station	Offset	Theoretical Grade Elevations	Theoretical Grade Elevations Adjusted For Dead Load Deflection and Grinding
2BA	47+09.62	9.63	602.55	603.31
2BB	47+19.62	9.63	602.44	603.18
2BC	47+29.62	9.63	602.33	603.03
2BD	47+39.62	9.63	602.21	602.88
2BE	47+49.62	9.63	602.09	602.71
2BF	47+59.62	9.63	601.96	602.54
2BG	47+69.62	9.63	601.83	602.36
2BH	47+79.62	9.63	601.70	602.17
2BI	47+89.62	9.63	601.56	601.97
2BJ	47+99.62	9.63	601.42	601.77
2BK	48+09.62	9.63	601.28	601.57
2BL	48+19.62	9.63	601.13	601.36
2BM	48+29.62	9.63	600.97	601.16
2BN	48+39.62	9.63	600.82	600.95
2BO	48+49.62	9.63	600.65	600.75
2BP	48+59.62	9.63	600.49	600.56
2BQ	48+69.62	9.63	600.32	600.36
℄ BRG. PIER 4 EB	48+83.62	9.63	600.07	600.10
2BR	48+93.62	9.63	599.90	599.91
2BS	49+03.62	9.63	599.71	599.74
2BT	49+13.62	9.63	599.53	599.56
2BU	49+23.62	9.63	599.33	599.39
2BV	49+33.62	9.63	599.14	599.22
2BW	49+43.62	9.63	598.94	599.06
2BX	49+53.62	9.63	598.74	598.89
2BY	49+63.62	9.63	598.53	598.73
2BZ	49+73.62	9.63	598.32	598.56
2CA	49+83.62	9.63	598.10	598.40
2CB	49+93.62	9.63	597.88	598.22
2CC	50+03.62	9.63	597.66	598.04
2CD	50+13.62	9.63	597.43	597.85
2CE	50+23.62	9.63	597.20	597.65
2CF	50+33.62	9.63	596.97	597.44
2CG	50+43.62	9.63	596.73	597.22
2CH	50+53.62	9.63	596.48	596.99
2CI	50+63.62	9.63	596.24	596.74
2CJ	50+73.62	9.63	595.99	596.49
2CK	50+83.62	9.63	595.73	596.22
2CL	50+93.62	9.63	595.47	595.94
2CM	51+03.62	9.63	595.21	595.65
2CN	51+13.62	9.63	594.94	595.35
2CO	51+23.62	9.63	594.67	595.04
2CP	51+33.62	9.63	594.40	594.72
2CQ	51+43.62	9.63	594.12	594.39
2CR	51+53.62	9.63	593.83	594.05
2CS	51+63.62	9.63	593.55	593.70
2CT	51+73.62	9.63	593.25	593.34
℄ W BRG PIER 5 EB	51+83.62	9.63	592.96	592.98
℄ PIER 5 EB	51+85.12	9.63	592.92	592.94

SOUTH EDGE OF NORTH LANE - EB

Location	Station	Offset	Theoretical Grade Elevations	Theoretical Grade Elevations Adjusted For Dead Load Deflection and Grinding
℄ PIER 2 EB	41+68.45	12.00	602.56	602.58
℄ E BRG PIER 2 EB	41+69.62	12.00	602.58	602.60
2A	41+79.62	12.00	602.68	602.77
2B	41+89.62	12.00	602.79	602.94
2C	41+99.62	12.00	602.88	603.10
2D	42+09.62	12.00	602.98	603.25
2E	42+19.62	12.00	603.07	603.39
2F	42+29.62	12.00	603.15	603.52
2G	42+39.62	12.00	603.24	603.65
2H	42+49.62	12.00	603.32	603.76
2I	42+59.62	12.00	603.39	603.86
2J	42+69.62	12.00	603.46	603.95
2K	42+79.62	12.00	603.53	604.03
2L	42+89.62	12.00	603.59	604.09
2M	42+99.62	12.00	603.65	604.15
2N	43+09.62	12.00	603.70	604.19
2O	43+19.62	12.00	603.75	604.22
2P	43+29.62	12.00	603.80	604.24
2Q	43+39.62	12.00	603.84	604.25
2R	43+49.62	12.00	603.88	604.26
2S	43+59.62	12.00	603.91	604.25
2T	43+69.62	12.00	603.94	604.24
2U	43+79.62	12.00	603.97	604.22
2V	43+89.62	12.00	603.99	604.19
2W	43+99.62	12.00	604.01	604.17
2X	44+09.62	12.00	604.03	604.14
2Y	44+19.62	12.00	604.04	604.12
2Z	44+29.62	12.00	604.04	604.10
2AA	44+39.62	12.00	604.05	604.08
2AB	44+49.62	12.00	604.04	604.07
2AC	44+59.62	12.00	604.04	604.06
℄ BRG. PIER 3 EB	44+69.62	12.00	604.03	604.05
2AD	44+79.62	12.00	604.02	604.05
2AE	44+89.62	12.00	604.00	604.06
2AF	44+99.62	12.00	603.98	604.06
2AG	45+09.62	12.00	603.95	604.07
2AH	45+19.62	12.00	603.92	604.09
2AI	45+29.62	12.00	603.89	604.10
2AJ	45+39.62	12.00	603.85	604.12
2AK	45+49.62	12.00	603.81	604.14
2AL	45+59.62	12.00	603.76	604.15
2AM	45+69.62	12.00	603.71	604.16
2AN	45+79.62	12.00	603.66	604.16
2AO	45+89.62	12.00	603.60	604.16
2AP	45+99.62	12.00	603.54	604.15
2AQ	46+09.62	12.00	603.47	604.13
2AR	46+19.62	12.00	603.41	604.09
2AS	46+29.62	12.00	603.33	604.05
2AT	46+39.62	12.00	603.25	604.00
2AU	46+49.62	12.00	603.17	603.94
2AV	46+59.62	12.00	603.09	603.87
2AW	46+69.62	12.00	603.00	603.79
2AX	46+79.62	12.00	602.90	603.70
2AY	46+89.62	12.00	602.81	603.60
2AZ	46+99.62	12.00	602.70	603.48

SOUTH EDGE OF NORTH LANE - EB (CONT.)

Location	Station	Offset	Theoretical Grade Elevations	Theoretical Grade Elevations Adjusted For Dead Load Deflection and Grinding
2BA	47+09.62	12.00	602.60	603.36
2BB	47+19.62	12.00	602.49	603.22
2BC	47+29.62	12.00	602.38	603.08
2BD	47+39.62	12.00	602.26	602.92
2BE	47+49.62	12.00	602.14	602.76
2BF	47+59.62	12.00	602.01	602.59
2BG	47+69.62	12.00	601.88	602.40
2BH	47+79.62	12.00	601.75	602.22
2BI	47+89.62	12.00	601.61	602.02
2BJ	47+99.62	12.00	601.47	601.82
2BK	48+09.62	12.00	601.32	601.62
2BL	48+19.62	12.00	601.17	601.41
2BM	48+29.62	12.00	601.02	601.21
2BN	48+39.62	12.00	600.86	601.00
2BO	48+49.62	12.00	600.70	600.80
2BP	48+59.62	12.00	600.54	600.60
2BQ	48+69.62	12.00	600.37	600.41
℄ BRG. PIER 4 EB	48+83.62	12.00	600.12	600.14
2BR	48+93.62	12.00	599.94	599.96
2BS	49+03.62	12.00	599.76	599.78
2BT	49+13.62	12.00	599.57	599.61
2BU	49+23.62	12.00	599.38	599.44
2BV	49+33.62	12.00	599.19	599.27
2BW	49+43.62	12.00	598.99	599.10
2BX	49+53.62	12.00	598.78	598.94
2BY	49+63.62	12.00	598.58	598.78
2BZ	49+73.62	12.00	598.37	598.61
2CA	49+83.62	12.00	598.15	598.44
2CB	49+93.62	12.00	597.93	598.27
2CC	50+03.62	12.00	597.71	598.09
2CD	50+13.62	12.00	597.48	597.90
2CE	50+23.62	12.00	597.25	597.70
2CF	50+33.62	12.00	597.01	597.48
2CG	50+43.62	12.00	596.78	597.26
2CH	50+53.62	12.00	596.53	597.03
2CI	50+63.62	12.00	596.29	596.79
2CJ	50+73.62	12.00	596.03	596.53
2CK	50+83.62	12.00	595.78	596.27
2CL	50+93.62	12.00	595.52	595.99
2CM	51+03.62	12.00	595.26	595.70
2CN	51+13.62	12.00	594.99	595.40
2CO	51+23.62	12.00	594.72	595.09
2CP	51+33.62	12.00	594.44	594.77
2CQ	51+43.62	12.00	594.16	594.43
2CR	51+53.62	12.00	593.88	594.09
2CS	51+63.62	12.00	593.59	593.74
2CT	51+73.62	12.00	593.30	593.39
℄ W BRG PIER 5 EB	51+83.62	12.00	593.01	593.03
℄ PIER 5 EB	51+85.12	12.00	592.96	592.98

NOTES:

1. All Elevations and Offsets are in feet.
2. Offsets are measured with respect to the I-80 EB PGL. Negative offsets are left and positive are right of the PGL.

GIRDER E4

Location	Station	Offset	Theoretical Grade Elevations	Theoretical Grade Elevations Adjusted For Dead Load Deflection and Grinding
℄ PIER 2 EB	41+68.45	19.21	602.67	602.69
℄ E BRG PIER 2 EB	41+69.62	19.21	602.68	602.71
2A	41+79.62	19.21	602.79	602.88
2B	41+89.62	19.21	602.89	603.04
2C	41+99.62	19.21	602.99	603.20
2D	42+09.62	19.21	603.09	603.36
2E	42+19.62	19.21	603.18	603.50
2F	42+29.62	19.21	603.26	603.63
2G	42+39.62	19.21	603.35	603.75
2H	42+49.62	19.21	603.42	603.87
2I	42+59.62	19.21	603.50	603.97
2J	42+69.62	19.21	603.57	604.06
2K	42+79.62	19.21	603.64	604.13
2L	42+89.62	19.21	603.70	604.20
2M	42+99.62	19.21	603.76	604.25
2N	43+09.62	19.21	603.81	604.30
2O	43+19.62	19.21	603.86	604.33
2P	43+29.62	19.21	603.91	604.35
2Q	43+39.62	19.21	603.95	604.36
2R	43+49.62	19.21	603.99	604.37
2S	43+59.62	19.21	604.02	604.36
2T	43+69.62	19.21	604.05	604.34
2U	43+79.62	19.21	604.08	604.32
2V	43+89.62	19.21	604.10	604.30
2W	43+99.62	19.21	604.12	604.28
2X	44+09.62	19.21	604.13	604.25
2Y	44+19.62	19.21	604.14	604.23
2Z	44+29.62	19.21	604.15	604.21
2AA	44+39.62	19.21	604.15	604.19
2AB	44+49.62	19.21	604.15	604.18
2AC	44+59.62	19.21	604.15	604.17
℄ BRG. PIER 3 EB	44+69.62	19.21	604.14	604.16
2AD	44+79.62	19.21	604.12	604.16
2AE	44+89.62	19.21	604.11	604.16
2AF	44+99.62	19.21	604.08	604.17
2AG	45+09.62	19.21	604.06	604.18
2AH	45+19.62	19.21	604.03	604.19
2AI	45+29.62	19.21	604.00	604.21
2AJ	45+39.62	19.21	603.96	604.23
2AK	45+49.62	19.21	603.92	604.24
2AL	45+59.62	19.21	603.87	604.26
2AM	45+69.62	19.21	603.82	604.27
2AN	45+79.62	19.21	603.77	604.27
2AO	45+89.62	19.21	603.71	604.27
2AP	45+99.62	19.21	603.65	604.25
2AQ	46+09.62	19.21	603.58	604.23
2AR	46+19.62	19.21	603.51	604.20
2AS	46+29.62	19.21	603.44	604.16
2AT	46+39.62	19.21	603.36	604.11
2AU	46+49.62	19.21	603.28	604.05
2AV	46+59.62	19.21	603.20	603.98
2AW	46+69.62	19.21	603.11	603.90
2AX	46+79.62	19.21	603.01	603.81
2AY	46+89.62	19.21	602.91	603.70
2AZ	46+99.62	19.21	602.81	603.59

GIRDER E4 (CONT.)

Location	Station	Offset	Theoretical Grade Elevations	Theoretical Grade Elevations Adjusted For Dead Load Deflection and Grinding
2BA	47+09.62	19.21	602.71	603.47
2BB	47+19.62	19.21	602.60	603.33
2BC	47+29.62	19.21	602.48	603.19
2BD	47+39.62	19.21	602.37	603.03
2BE	47+49.62	19.21	602.25	602.87
2BF	47+59.62	19.21	602.12	602.69
2BG	47+69.62	19.21	601.99	602.51
2BH	47+79.62	19.21	601.86	602.32
2BI	47+89.62	19.21	601.72	602.13
2BJ	47+99.62	19.21	601.58	601.93
2BK	48+09.62	19.21	601.43	601.72
2BL	48+19.62	19.21	601.28	601.52
2BM	48+29.62	19.21	601.13	601.31
2BN	48+39.62	19.21	600.97	601.11
2BO	48+49.62	19.21	600.81	600.91
2BP	48+59.62	19.21	600.64	600.71
2BQ	48+69.62	19.21	600.47	600.52
℄ BRG. PIER 4 EB	48+83.62	19.21	600.23	600.25
2BR	48+93.62	19.21	600.05	600.07
2BS	49+03.62	19.21	599.87	599.89
2BT	49+13.62	19.21	599.68	599.72
2BU	49+23.62	19.21	599.49	599.54
2BV	49+33.62	19.21	599.29	599.38
2BW	49+43.62	19.21	599.10	599.21
2BX	49+53.62	19.21	598.89	599.05
2BY	49+63.62	19.21	598.68	598.89
2BZ	49+73.62	19.21	598.47	598.72
2CA	49+83.62	19.21	598.26	598.55
2CB	49+93.62	19.21	598.04	598.38
2CC	50+03.62	19.21	597.82	598.19
2CD	50+13.62	19.21	597.59	598.00
2CE	50+23.62	19.21	597.36	597.80
2CF	50+33.62	19.21	597.12	597.59
2CG	50+43.62	19.21	596.88	597.37
2CH	50+53.62	19.21	596.64	597.14
2CI	50+63.62	19.21	596.39	596.90
2CJ	50+73.62	19.21	596.14	596.64
2CK	50+83.62	19.21	595.89	596.38
2CL	50+93.62	19.21	595.63	596.10
2CM	51+03.62	19.21	595.36	595.81
2CN	51+13.62	19.21	595.10	595.51
2CO	51+23.62	19.21	594.83	595.20
2CP	51+33.62	19.21	594.55	594.87
2CQ	51+43.62	19.21	594.27	594.54
2CR	51+53.62	19.21	593.99	594.20
2CS	51+63.62	19.21	593.70	593.85
2CT	51+73.62	19.21	593.41	593.50
℄ W BRG PIER 5 EB	51+83.62	19.21	593.12	593.14
℄ PIER 5 EB	51+85.12	19.21	593.07	593.09

CROWN - EB

Location	Station	Offset	Theoretical Grade Elevations	Theoretical Grade Elevations Adjusted For Dead Load Deflection and Grinding
℄ PIER 2 EB	41+68.45	24.00	602.74	602.76
℄ E BRG PIER 2 EB	41+69.62	24.00	602.76	602.78
2A	41+79.62	24.00	602.86	602.95
2B	41+89.62	24.00	602.97	603.12
2C	41+99.62	24.00	603.06	603.28
2D	42+09.62	24.00	603.16	603.43
2E	42+19.62	24.00	603.25	603.57
2F	42+29.62	24.00	603.33	603.70
2G	42+39.62	24.00	603.42	603.83
2H	42+49.62	24.00	603.50	603.94
2I	42+59.62	24.00	603.57	604.04
2J	42+69.62	24.00	603.64	604.13
2K	42+79.62	24.00	603.71	604.21
2L	42+89.62	24.00	603.77	604.27
2M	42+99.62	24.00	603.83	604.33
2N	43+09.62	24.00	603.88	604.37
2O	43+19.62	24.00	603.93	604.40
2P	43+29.62	24.00	603.98	604.42
2Q	43+39.62	24.00	604.02	604.43
2R	43+49.62	24.00	604.06	604.44
2S	43+59.62	24.00	604.09	604.43
2T	43+69.62	24.00	604.12	604.42
2U	43+79.62	24.00	604.15	604.40
2V	43+89.62	24.00	604.17	604.37
2W	43+99.62	24.00	604.19	604.35
2X	44+09.62	24.00	604.21	604.32
2Y	44+19.62	24.00	604.22	604.30
2Z	44+29.62	24.00	604.22	604.28
2AA	44+39.62	24.00	604.23	604.26
2AB	44+49.62	24.00	604.22	604.25
2AC	44+59.62	24.00	604.22	604.24
℄ BRG. PIER 3 EB	44+69.62	24.00	604.21	604.23
2AD	44+79.62	24.00	604.20	604.23
2AE	44+89.62	24.00	604.18	604.24
2AF	44+99.62	24.00	604.16	604.24
2AG	45+09.62	24.00	604.13	604.25
2AH	45+19.62	24.00	604.10	604.27
2AI	45+29.62	24.00	604.07	604.28
2AJ	45+39.62	24.00	604.03	604.30
2AK	45+49.62	24.00	603.99	604.32
2AL	45+59.62	24.00	603.94	604.33
2AM	45+69.62	24.00	603.89	604.34
2AN	45+79.62	24.00	603.84	604.34
2AO	45+89.62	24.00	603.78	604.34
2AP	45+99.62	24.00	603.72	604.33
2AQ	46+09.62	24.00	603.65	604.31
2AR	46+19.62	24.00	603.59	604.27
2AS	46+29.62	24.00	603.51	604.23
2AT	46+39.62	24.00	603.43	604.18
2AU	46+49.62	24.00	603.35	604.12
2AV	46+59.62	24.00	603.27	604.05
2AW	46+69.62	24.00	603.18	603.97
2AX	46+79.62	24.00	603.08	603.88
2AY	46+89.62	24.00	602.99	603.78
2AZ	46+99.62	24.00	602.88	603.66

NOTES:

1. All Elevations and Offsets are in feet.
2. Offsets are measured with respect to the I-80 EB PGL. Negative offsets are left and positive are right of the PGL.

CROWN - EB (CONT.)

Location	Station	Offset	Theoretical Grade Elevations	Theoretical Grade Elevations Adjusted For Dead Load Deflection and Grinding
2BA	47+09.62	24.00	602.78	603.54
2BB	47+19.62	24.00	602.67	603.40
2BC	47+29.62	24.00	602.56	603.26
2BD	47+39.62	24.00	602.44	603.10
2BE	47+49.62	24.00	602.32	602.94
2BF	47+59.62	24.00	602.19	602.77
2BG	47+69.62	24.00	602.06	602.58
2BH	47+79.62	24.00	601.93	602.40
2BI	47+89.62	24.00	601.79	602.20
2BJ	47+99.62	24.00	601.65	602.00
2BK	48+09.62	24.00	601.50	601.80
2BL	48+19.62	24.00	601.35	601.59
2BM	48+29.62	24.00	601.20	601.39
2BN	48+39.62	24.00	601.04	601.18
2BO	48+49.62	24.00	600.88	600.98
2BP	48+59.62	24.00	600.72	600.78
2BQ	48+69.62	24.00	600.55	600.59
℄ BRG. PIER 4 EB	48+83.62	24.00	600.30	600.32
2BR	48+93.62	24.00	600.12	600.14
2BS	49+03.62	24.00	599.94	599.96
2BT	49+13.62	24.00	599.75	599.79
2BU	49+23.62	24.00	599.56	599.62
2BV	49+33.62	24.00	599.37	599.45
2BW	49+43.62	24.00	599.17	599.28
2BX	49+53.62	24.00	598.96	599.12
2BY	49+63.62	24.00	598.76	598.96
2BZ	49+73.62	24.00	598.55	598.79
2CA	49+83.62	24.00	598.33	598.62
2CB	49+93.62	24.00	598.11	598.45
2CC	50+03.62	24.00	597.89	598.27
2CD	50+13.62	24.00	597.66	598.08
2CE	50+23.62	24.00	597.43	597.88
2CF	50+33.62	24.00	597.19	597.66
2CG	50+43.62	24.00	596.96	597.44
2CH	50+53.62	24.00	596.71	597.21
2CI	50+63.62	24.00	596.47	596.97
2CJ	50+73.62	24.00	596.21	596.71
2CK	50+83.62	24.00	595.96	596.45
2CL	50+93.62	24.00	595.70	596.17
2CM	51+03.62	24.00	595.44	595.88
2CN	51+13.62	24.00	595.17	595.58
2CO	51+23.62	24.00	594.90	595.27
2CP	51+33.62	24.00	594.62	594.95
2CQ	51+43.62	24.00	594.34	594.61
2CR	51+53.62	24.00	594.06	594.27
2CS	51+63.62	24.00	593.77	593.92
2CT	51+73.62	24.00	593.48	593.57
℄ W BRG PIER 5 EB	51+83.62	24.00	593.19	593.21
℄ PIER 5 EB	51+85.12	24.00	593.14	593.16

GIRDER E5

Location	Station	Offset	Theoretical Grade Elevations	Theoretical Grade Elevations Adjusted For Dead Load Deflection and Grinding
℄ PIER 2 EB	41+68.45	28.79	602.67	602.69
℄ E BRG PIER 2 EB	41+69.62	28.79	602.68	602.71
2A	41+79.62	28.79	602.79	602.88
2B	41+89.62	28.79	602.89	603.04
2C	41+99.62	28.79	602.99	603.20
2D	42+09.62	28.79	603.09	603.36
2E	42+19.62	28.79	603.18	603.50
2F	42+29.62	28.79	603.26	603.63
2G	42+39.62	28.79	603.35	603.75
2H	42+49.62	28.79	603.42	603.87
2I	42+59.62	28.79	603.50	603.97
2J	42+69.62	28.79	603.57	604.06
2K	42+79.62	28.79	603.64	604.13
2L	42+89.62	28.79	603.70	604.20
2M	42+99.62	28.79	603.76	604.25
2N	43+09.62	28.79	603.81	604.30
2O	43+19.62	28.79	603.86	604.33
2P	43+29.62	28.79	603.91	604.35
2Q	43+39.62	28.79	603.95	604.36
2R	43+49.62	28.79	603.99	604.37
2S	43+59.62	28.79	604.02	604.36
2T	43+69.62	28.79	604.05	604.34
2U	43+79.62	28.79	604.08	604.32
2V	43+89.62	28.79	604.10	604.30
2W	43+99.62	28.79	604.12	604.28
2X	44+09.62	28.79	604.13	604.25
2Y	44+19.62	28.79	604.14	604.23
2Z	44+29.62	28.79	604.15	604.21
2AA	44+39.62	28.79	604.15	604.19
2AB	44+49.62	28.79	604.15	604.18
2AC	44+59.62	28.79	604.15	604.17
℄ BRG. PIER 3 EB	44+69.62	28.79	604.14	604.16
2AD	44+79.62	28.79	604.12	604.16
2AE	44+89.62	28.79	604.11	604.16
2AF	44+99.62	28.79	604.08	604.17
2AG	45+09.62	28.79	604.06	604.18
2AH	45+19.62	28.79	604.03	604.19
2AI	45+29.62	28.79	604.00	604.21
2AJ	45+39.62	28.79	603.96	604.23
2AK	45+49.62	28.79	603.92	604.24
2AL	45+59.62	28.79	603.87	604.26
2AM	45+69.62	28.79	603.82	604.27
2AN	45+79.62	28.79	603.77	604.27
2AO	45+89.62	28.79	603.71	604.27
2AP	45+99.62	28.79	603.65	604.25
2AQ	46+09.62	28.79	603.58	604.23
2AR	46+19.62	28.79	603.51	604.20
2AS	46+29.62	28.79	603.44	604.16
2AT	46+39.62	28.79	603.36	604.11
2AU	46+49.62	28.79	603.28	604.05
2AV	46+59.62	28.79	603.20	603.98
2AW	46+69.62	28.79	603.11	603.90
2AX	46+79.62	28.79	603.01	603.81
2AY	46+89.62	28.79	602.91	603.70
2AZ	46+99.62	28.79	602.81	603.59

GIRDER E5 (CONT.)

Location	Station	Offset	Theoretical Grade Elevations	Theoretical Grade Elevations Adjusted For Dead Load Deflection and Grinding
2BA	47+09.62	28.79	602.71	603.47
2BB	47+19.62	28.79	602.60	603.33
2BC	47+29.62	28.79	602.48	603.19
2BD	47+39.62	28.79	602.37	603.03
2BE	47+49.62	28.79	602.25	602.87
2BF	47+59.62	28.79	602.12	602.69
2BG	47+69.62	28.79	601.99	602.51
2BH	47+79.62	28.79	601.86	602.32
2BI	47+89.62	28.79	601.72	602.13
2BJ	47+99.62	28.79	601.58	601.93
2BK	48+09.62	28.79	601.43	601.72
2BL	48+19.62	28.79	601.28	601.52
2BM	48+29.62	28.79	601.13	601.31
2BN	48+39.62	28.79	600.97	601.11
2BO	48+49.62	28.79	600.81	600.91
2BP	48+59.62	28.79	600.64	600.71
2BQ	48+69.62	28.79	600.47	600.52
℄ BRG. PIER 4 EB	48+83.62	28.79	600.23	600.25
2BR	48+93.62	28.79	600.05	600.07
2BS	49+03.62	28.79	599.87	599.89
2BT	49+13.62	28.79	599.68	599.72
2BU	49+23.62	28.79	599.49	599.54
2BV	49+33.62	28.79	599.29	599.38
2BW	49+43.62	28.79	599.10	599.21
2BX	49+53.62	28.79	598.89	599.05
2BY	49+63.62	28.79	598.68	598.89
2BZ	49+73.62	28.79	598.47	598.72
2CA	49+83.62	28.79	598.26	598.55
2CB	49+93.62	28.79	598.04	598.38
2CC	50+03.62	28.79	597.82	598.19
2CD	50+13.62	28.79	597.59	598.00
2CE	50+23.62	28.79	597.36	597.80
2CF	50+33.62	28.79	597.12	597.59
2CG	50+43.62	28.79	596.88	597.37
2CH	50+53.62	28.79	596.64	597.14
2CI	50+63.62	28.79	596.39	596.90
2CJ	50+73.62	28.79	596.14	596.64
2CK	50+83.62	28.79	595.89	596.38
2CL	50+93.62	28.79	595.63	596.10
2CM	51+03.62	28.79	595.36	595.81
2CN	51+13.62	28.79	595.10	595.51
2CO	51+23.62	28.79	594.83	595.20
2CP	51+33.62	28.79	594.55	594.87
2CQ	51+43.62	28.79	594.27	594.54
2CR	51+53.62	28.79	593.99	594.20
2CS	51+63.62	28.79	593.70	593.85
2CT	51+73.62	28.79	593.41	593.50
℄ W BRG PIER 5 EB	51+83.62	28.79	593.12	593.14
℄ PIER 5 EB	51+85.12	28.79	593.07	593.09

NOTES:

1. All Elevations and Offsets are in feet.
2. Offsets are measured with respect to the I-80 EB PGL. Negative offsets are left and positive are right of the PGL.

NORTH EDGE OF SOUTH LANE - EB

Location	Station	Offset	Theoretical Grade Elevations	Theoretical Grade Elevations Adjusted For Dead Load Deflection and Grinding
℄ PIER 2 EB	41+68.45	36.00	602.56	602.58
℄ E BRG PIER 2 EB	41+69.62	36.00	602.58	602.60
2A	41+79.62	36.00	602.68	602.77
2B	41+89.62	36.00	602.79	602.94
2C	41+99.62	36.00	602.88	603.10
2D	42+09.62	36.00	602.98	603.25
2E	42+19.62	36.00	603.07	603.39
2F	42+29.62	36.00	603.15	603.52
2G	42+39.62	36.00	603.24	603.65
2H	42+49.62	36.00	603.32	603.76
2I	42+59.62	36.00	603.39	603.86
2J	42+69.62	36.00	603.46	603.95
2K	42+79.62	36.00	603.53	604.03
2L	42+89.62	36.00	603.59	604.09
2M	42+99.62	36.00	603.65	604.15
2N	43+09.62	36.00	603.70	604.19
2O	43+19.62	36.00	603.75	604.22
2P	43+29.62	36.00	603.80	604.24
2Q	43+39.62	36.00	603.84	604.25
2R	43+49.62	36.00	603.88	604.26
2S	43+59.62	36.00	603.91	604.25
2T	43+69.62	36.00	603.94	604.24
2U	43+79.62	36.00	603.97	604.22
2V	43+89.62	36.00	603.99	604.19
2W	43+99.62	36.00	604.01	604.17
2X	44+09.62	36.00	604.03	604.14
2Y	44+19.62	36.00	604.04	604.12
2Z	44+29.62	36.00	604.04	604.10
2AA	44+39.62	36.00	604.05	604.08
2AB	44+49.62	36.00	604.04	604.07
2AC	44+59.62	36.00	604.04	604.06
℄ BRG. PIER 3 EB	44+69.62	36.00	604.03	604.05
2AD	44+79.62	36.00	604.02	604.05
2AE	44+89.62	36.00	604.00	604.06
2AF	44+99.62	36.00	603.98	604.06
2AG	45+09.62	36.00	603.95	604.07
2AH	45+19.62	36.00	603.92	604.09
2AI	45+29.62	36.00	603.89	604.10
2AJ	45+39.62	36.00	603.85	604.12
2AK	45+49.62	36.00	603.81	604.14
2AL	45+59.62	36.00	603.76	604.15
2AM	45+69.62	36.00	603.71	604.16
2AN	45+79.62	36.00	603.66	604.16
2AO	45+89.62	36.00	603.60	604.16
2AP	45+99.62	36.00	603.54	604.15
2AQ	46+09.62	36.00	603.47	604.13
2AR	46+19.62	36.00	603.41	604.09
2AS	46+29.62	36.00	603.33	604.05
2AT	46+39.62	36.00	603.25	604.00
2AU	46+49.62	36.00	603.17	603.94
2AV	46+59.62	36.00	603.09	603.87
2AW	46+69.62	36.00	603.00	603.79
2AX	46+79.62	36.00	602.90	603.70
2AY	46+89.62	36.00	602.81	603.60
2AZ	46+99.62	36.00	602.70	603.48

NORTH EDGE OF SOUTH LANE - EB (CONT.)

Location	Station	Offset	Theoretical Grade Elevations	Theoretical Grade Elevations Adjusted For Dead Load Deflection and Grinding
2BA	47+09.62	36.00	602.60	603.36
2BB	47+19.62	36.00	602.49	603.22
2BC	47+29.62	36.00	602.38	603.08
2BD	47+39.62	36.00	602.26	602.92
2BE	47+49.62	36.00	602.14	602.76
2BF	47+59.62	36.00	602.01	602.59
2BG	47+69.62	36.00	601.88	602.40
2BH	47+79.62	36.00	601.75	602.22
2BI	47+89.62	36.00	601.61	602.02
2BJ	47+99.62	36.00	601.47	601.82
2BK	48+09.62	36.00	601.32	601.62
2BL	48+19.62	36.00	601.17	601.41
2BM	48+29.62	36.00	601.02	601.21
2BN	48+39.62	36.00	600.86	601.00
2BO	48+49.62	36.00	600.70	600.80
2BP	48+59.62	36.00	600.54	600.60
2BQ	48+69.62	36.00	600.37	600.41
℄ BRG. PIER 4 EB	48+83.62	36.00	600.12	600.14
2BR	48+93.62	36.00	599.94	599.96
2BS	49+03.62	36.00	599.76	599.78
2BT	49+13.62	36.00	599.57	599.61
2BU	49+23.62	36.00	599.38	599.44
2BV	49+33.62	36.00	599.19	599.27
2BW	49+43.62	36.00	598.99	599.10
2BX	49+53.62	36.00	598.78	598.94
2BY	49+63.62	36.00	598.58	598.78
2BZ	49+73.62	36.00	598.37	598.61
2CA	49+83.62	36.00	598.15	598.44
2CB	49+93.62	36.00	597.93	598.27
2CC	50+03.62	36.00	597.71	598.09
2CD	50+13.62	36.00	597.48	597.90
2CE	50+23.62	36.00	597.25	597.70
2CF	50+33.62	36.00	597.01	597.48
2CG	50+43.62	36.00	596.78	597.26
2CH	50+53.62	36.00	596.53	597.03
2CI	50+63.62	36.00	596.29	596.79
2CJ	50+73.62	36.00	596.03	596.53
2CK	50+83.62	36.00	595.78	596.27
2CL	50+93.62	36.00	595.52	595.99
2CM	51+03.62	36.00	595.26	595.70
2CN	51+13.62	36.00	594.99	595.40
2CO	51+23.62	36.00	594.72	595.09
2CP	51+33.62	36.00	594.44	594.77
2CQ	51+43.62	36.00	594.16	594.43
2CR	51+53.62	36.00	593.88	594.09
2CS	51+63.62	36.00	593.59	593.74
2CT	51+73.62	36.00	593.30	593.39
℄ W BRG PIER 5 EB	51+83.62	36.00	593.01	593.03
℄ PIER 5 EB	51+85.12	36.00	592.96	592.98

GIRDER E6

Location	Station	Offset	Theoretical Grade Elevations	Theoretical Grade Elevations Adjusted For Dead Load Deflection and Grinding
℄ PIER 2 EB	41+68.45	38.38	602.52	602.54
℄ E BRG PIER 2 EB	41+69.62	38.38	602.53	602.55
2A	41+79.62	38.38	602.64	602.72
2B	41+89.62	38.38	602.74	602.89
2C	41+99.62	38.38	602.84	603.05
2D	42+09.62	38.38	602.93	603.20
2E	42+19.62	38.38	603.02	603.34
2F	42+29.62	38.38	603.11	603.48
2G	42+39.62	38.38	603.19	603.60
2H	42+49.62	38.38	603.27	603.71
2I	42+59.62	38.38	603.34	603.81
2J	42+69.62	38.38	603.41	603.90
2K	42+79.62	38.38	603.48	603.98
2L	42+89.62	38.38	603.54	604.04
2M	42+99.62	38.38	603.60	604.10
2N	43+09.62	38.38	603.65	604.14
2O	43+19.62	38.38	603.71	604.17
2P	43+29.62	38.38	603.75	604.20
2Q	43+39.62	38.38	603.79	604.21
2R	43+49.62	38.38	603.83	604.21
2S	43+59.62	38.38	603.87	604.20
2T	43+69.62	38.38	603.90	604.19
2U	43+79.62	38.38	603.92	604.17
2V	43+89.62	38.38	603.95	604.15
2W	43+99.62	38.38	603.96	604.12
2X	44+09.62	38.38	603.98	604.09
2Y	44+19.62	38.38	603.99	604.07
2Z	44+29.62	38.38	604.00	604.05
2AA	44+39.62	38.38	604.00	604.03
2AB	44+49.62	38.38	604.00	604.02
2AC	44+59.62	38.38	603.99	604.01
℄ BRG. PIER 3 EB	44+69.62	38.38	603.98	604.00
2AD	44+79.62	38.38	603.97	604.00
2AE	44+89.62	38.38	603.95	604.01
2AF	44+99.62	38.38	603.93	604.02
2AG	45+09.62	38.38	603.90	604.03
2AH	45+19.62	38.38	603.87	604.04
2AI	45+29.62	38.38	603.84	604.05
2AJ	45+39.62	38.38	603.80	604.07
2AK	45+49.62	38.38	603.76	604.09
2AL	45+59.62	38.38	603.72	604.10
2AM	45+69.62	38.38	603.67	604.11
2AN	45+79.62	38.38	603.61	604.11
2AO	45+89.62	38.38	603.55	604.11
2AP	45+99.62	38.38	603.49	604.10
2AQ	46+09.62	38.38	603.43	604.08
2AR	46+19.62	38.38	603.36	604.05
2AS	46+29.62	38.38	603.28	604.01
2AT	46+39.62	38.38	603.21	603.96
2AU	46+49.62	38.38	603.13	603.90
2AV	46+59.62	38.38	603.04	603.82
2AW	46+69.62	38.38	602.95	603.74
2AX	46+79.62	38.38	602.86	603.65
2AY	46+89.62	38.38	602.76	603.55
2AZ	46+99.62	38.38	602.66	603.44

NOTES:

1. All Elevations and Offsets are in feet.
2. Offsets are measured with respect to the I-80 EB PGL. Negative offsets are left and positive are right of the PGL.

GIRDER E6 (CONT.)

Location	Station	Offset	Theoretical Grade Elevations	Theoretical Grade Elevations Adjusted For Dead Load Deflection and Grinding
2BA	47+09.62	38.38	602.55	603.31
2BB	47+19.62	38.38	602.44	603.18
2BC	47+29.62	38.38	602.33	603.03
2BD	47+39.62	38.38	602.21	602.88
2BE	47+49.62	38.38	602.09	602.71
2BF	47+59.62	38.38	601.96	602.54
2BG	47+69.62	38.38	601.83	602.36
2BH	47+79.62	38.38	601.70	602.17
2BI	47+89.62	38.38	601.56	601.97
2BJ	47+99.62	38.38	601.42	601.77
2BK	48+09.62	38.38	601.28	601.57
2BL	48+19.62	38.38	601.13	601.36
2BM	48+29.62	38.38	600.97	601.16
2BN	48+39.62	38.38	600.82	600.95
2BO	48+49.62	38.38	600.65	600.75
2BP	48+59.62	38.38	600.49	600.56
2BQ	48+69.62	38.38	600.32	600.36
℄ BRG. PIER 4 EB	48+83.62	38.38	600.07	600.10
2BR	48+93.62	38.38	599.90	599.91
2BS	49+03.62	38.38	599.71	599.74
2BT	49+13.62	38.38	599.53	599.56
2BU	49+23.62	38.38	599.33	599.39
2BV	49+33.62	38.38	599.14	599.22
2BW	49+43.62	38.38	598.94	599.06
2BX	49+53.62	38.38	598.74	598.89
2BY	49+63.62	38.38	598.53	598.73
2BZ	49+73.62	38.38	598.32	598.56
2CA	49+83.62	38.38	598.10	598.40
2CB	49+93.62	38.38	597.88	598.22
2CC	50+03.62	38.38	597.66	598.04
2CD	50+13.62	38.38	597.43	597.85
2CE	50+23.62	38.38	597.20	597.65
2CF	50+33.62	38.38	596.97	597.44
2CG	50+43.62	38.38	596.73	597.22
2CH	50+53.62	38.38	596.48	596.99
2CI	50+63.62	38.38	596.24	596.74
2CJ	50+73.62	38.38	595.99	596.49
2CK	50+83.62	38.38	595.73	596.22
2CL	50+93.62	38.38	595.47	595.94
2CM	51+03.62	38.38	595.21	595.65
2CN	51+13.62	38.38	594.94	595.35
2CO	51+23.62	38.38	594.67	595.04
2CP	51+33.62	38.38	594.40	594.72
2CQ	51+43.62	38.38	594.12	594.39
2CR	51+53.62	38.38	593.83	594.05
2CS	51+63.62	38.38	593.55	593.70
2CT	51+73.62	38.38	593.25	593.34
℄ W BRG PIER 5 EB	51+83.62	38.38	592.96	592.98
℄ PIER 5 EB	51+85.12	38.38	592.92	592.94

GIRDER E7

Location	Station	Offset	Theoretical Grade Elevations	Theoretical Grade Elevations Adjusted For Dead Load Deflection and Grinding
℄ PIER 2 EB	41+68.45	47.96	602.32	602.35
℄ E BRG PIER 2 EB	41+69.62	47.96	602.34	602.36
2A	41+79.62	47.96	602.44	602.53
2B	41+89.62	47.96	602.55	602.70
2C	41+99.62	47.96	602.64	602.86
2D	42+09.62	47.96	602.74	603.01
2E	42+19.62	47.96	602.83	603.15
2F	42+29.62	47.96	602.92	603.28
2G	42+39.62	47.96	603.00	603.41
2H	42+49.62	47.96	603.08	603.52
2I	42+59.62	47.96	603.15	603.62
2J	42+69.62	47.96	603.22	603.71
2K	42+79.62	47.96	603.29	603.79
2L	42+89.62	47.96	603.35	603.85
2M	42+99.62	47.96	603.41	603.91
2N	43+09.62	47.96	603.46	603.95
2O	43+19.62	47.96	603.51	603.98
2P	43+29.62	47.96	603.56	604.00
2Q	43+39.62	47.96	603.60	604.02
2R	43+49.62	47.96	603.64	604.02
2S	43+59.62	47.96	603.68	604.01
2T	43+69.62	47.96	603.71	604.00
2U	43+79.62	47.96	603.73	603.98
2V	43+89.62	47.96	603.75	603.95
2W	43+99.62	47.96	603.77	603.93
2X	44+09.62	47.96	603.79	603.90
2Y	44+19.62	47.96	603.80	603.88
2Z	44+29.62	47.96	603.80	603.86
2AA	44+39.62	47.96	603.81	603.84
2AB	44+49.62	47.96	603.80	603.83
2AC	44+59.62	47.96	603.80	603.82
℄ BRG. PIER 3 EB	44+69.62	47.96	603.79	603.81
2AD	44+79.62	47.96	603.78	603.81
2AE	44+89.62	47.96	603.76	603.82
2AF	44+99.62	47.96	603.74	603.82
2AG	45+09.62	47.96	603.71	603.83
2AH	45+19.62	47.96	603.68	603.85
2AI	45+29.62	47.96	603.65	603.86
2AJ	45+39.62	47.96	603.61	603.88
2AK	45+49.62	47.96	603.57	603.90
2AL	45+59.62	47.96	603.52	603.91
2AM	45+69.62	47.96	603.47	603.92
2AN	45+79.62	47.96	603.42	603.92
2AO	45+89.62	47.96	603.36	603.92
2AP	45+99.62	47.96	603.30	603.91
2AQ	46+09.62	47.96	603.24	603.89
2AR	46+19.62	47.96	603.17	603.85
2AS	46+29.62	47.96	603.09	603.81
2AT	46+39.62	47.96	603.02	603.77
2AU	46+49.62	47.96	602.93	603.70
2AV	46+59.62	47.96	602.85	603.63
2AW	46+69.62	47.96	602.76	603.55
2AX	46+79.62	47.96	602.66	603.46
2AY	46+89.62	47.96	602.57	603.36
2AZ	46+99.62	47.96	602.47	603.24

GIRDER E7 (CONT.)

Location	Station	Offset	Theoretical Grade Elevations	Theoretical Grade Elevations Adjusted For Dead Load Deflection and Grinding
2BA	47+09.62	47.96	602.36	603.12
2BB	47+19.62	47.96	602.25	602.98
2BC	47+29.62	47.96	602.14	602.84
2BD	47+39.62	47.96	602.02	602.69
2BE	47+49.62	47.96	601.90	602.52
2BF	47+59.62	47.96	601.77	602.35
2BG	47+69.62	47.96	601.64	602.17
2BH	47+79.62	47.96	601.51	601.98
2BI	47+89.62	47.96	601.37	601.78
2BJ	47+99.62	47.96	601.23	601.58
2BK	48+09.62	47.96	601.08	601.38
2BL	48+19.62	47.96	600.93	601.17
2BM	48+29.62	47.96	600.78	600.97
2BN	48+39.62	47.96	600.62	600.76
2BO	48+49.62	47.96	600.46	600.56
2BP	48+59.62	47.96	600.30	600.37
2BQ	48+69.62	47.96	600.13	600.17
℄ BRG. PIER 4 EB	48+83.62	47.96	599.88	599.90
2BR	48+93.62	47.96	599.70	599.72
2BS	49+03.62	47.96	599.52	599.54
2BT	49+13.62	47.96	599.33	599.37
2BU	49+23.62	47.96	599.14	599.20
2BV	49+33.62	47.96	598.95	599.03
2BW	49+43.62	47.96	598.75	598.86
2BX	49+53.62	47.96	598.54	598.70
2BY	49+63.62	47.96	598.34	598.54
2BZ	49+73.62	47.96	598.13	598.37
2CA	49+83.62	47.96	597.91	598.20
2CB	49+93.62	47.96	597.69	598.03
2CC	50+03.62	47.96	597.47	597.85
2CD	50+13.62	47.96	597.24	597.66
2CE	50+23.62	47.96	597.01	597.46
2CF	50+33.62	47.96	596.78	597.25
2CG	50+43.62	47.96	596.54	597.02
2CH	50+53.62	47.96	596.29	596.79
2CI	50+63.62	47.96	596.05	596.55
2CJ	50+73.62	47.96	595.79	596.30
2CK	50+83.62	47.96	595.54	596.03
2CL	50+93.62	47.96	595.28	595.75
2CM	51+03.62	47.96	595.02	595.46
2CN	51+13.62	47.96	594.75	595.16
2CO	51+23.62	47.96	594.48	594.85
2CP	51+33.62	47.96	594.20	594.53
2CQ	51+43.62	47.96	593.92	594.19
2CR	51+53.62	47.96	593.64	593.85
2CS	51+63.62	47.96	593.35	593.51
2CT	51+73.62	47.96	593.06	593.15
℄ W BRG PIER 5 EB	51+83.62	47.96	592.77	592.79
℄ PIER 5 EB	51+85.12	47.96	592.72	592.74

NOTES:

1. All Elevations and Offsets are in feet.
2. Offsets are measured with respect to the I-80 EB PGL. Negative offsets are left and positive are right of the PGL.

GIRDER E8

Location	Station	Offset	Theoretical Grade Elevations	Theoretical Grade Elevations Adjusted For Dead Load Deflection and Grinding
℄ PIER 2 EB	41+68.45	57.54	602.13	602.15
℄ E BRG PIER 2 EB	41+69.62	57.54	602.15	602.17
2A	41+79.62	57.54	602.25	602.34
2B	41+89.62	57.54	602.35	602.50
2C	41+99.62	57.54	602.45	602.66
2D	42+09.62	57.54	602.55	602.82
2E	42+19.62	57.54	602.64	602.96
2F	42+29.62	57.54	602.72	603.09
2G	42+39.62	57.54	602.81	603.22
2H	42+49.62	57.54	602.88	603.33
2I	42+59.62	57.54	602.96	603.43
2J	42+69.62	57.54	603.03	603.52
2K	42+79.62	57.54	603.10	603.59
2L	42+89.62	57.54	603.16	603.66
2M	42+99.62	57.54	603.22	603.72
2N	43+09.62	57.54	603.27	603.76
2O	43+19.62	57.54	603.32	603.79
2P	43+29.62	57.54	603.37	603.81
2Q	43+39.62	57.54	603.41	603.82
2R	43+49.62	57.54	603.45	603.83
2S	43+59.62	57.54	603.48	603.82
2T	43+69.62	57.54	603.51	603.81
2U	43+79.62	57.54	603.54	603.79
2V	43+89.62	57.54	603.56	603.76
2W	43+99.62	57.54	603.58	603.74
2X	44+09.62	57.54	603.60	603.71
2Y	44+19.62	57.54	603.61	603.69
2Z	44+29.62	57.54	603.61	603.67
2AA	44+39.62	57.54	603.61	603.65
2AB	44+49.62	57.54	603.61	603.64
2AC	44+59.62	57.54	603.61	603.63
℄ BRG. PIER 3 EB	44+69.62	57.54	603.60	603.62
2AD	44+79.62	57.54	603.58	603.62
2AE	44+89.62	57.54	603.57	603.62
2AF	44+99.62	57.54	603.55	603.63
2AG	45+09.62	57.54	603.52	603.64
2AH	45+19.62	57.54	603.49	603.66
2AI	45+29.62	57.54	603.46	603.67
2AJ	45+39.62	57.54	603.42	603.69
2AK	45+49.62	57.54	603.38	603.70
2AL	45+59.62	57.54	603.33	603.72
2AM	45+69.62	57.54	603.28	603.73
2AN	45+79.62	57.54	603.23	603.73
2AO	45+89.62	57.54	603.17	603.73
2AP	45+99.62	57.54	603.11	603.71
2AQ	46+09.62	57.54	603.04	603.69
2AR	46+19.62	57.54	602.97	603.66
2AS	46+29.62	57.54	602.90	603.62
2AT	46+39.62	57.54	602.82	603.57
2AU	46+49.62	57.54	602.74	603.51
2AV	46+59.62	57.54	602.66	603.44
2AW	46+69.62	57.54	602.57	603.36
2AX	46+79.62	57.54	602.47	603.27
2AY	46+89.62	57.54	602.38	603.17
2AZ	46+99.62	57.54	602.27	603.05

GIRDER E8 (CONT.)

Location	Station	Offset	Theoretical Grade Elevations	Theoretical Grade Elevations Adjusted For Dead Load Deflection and Grinding
2BA	47+09.62	57.54	602.17	602.93
2BB	47+19.62	57.54	602.06	602.79
2BC	47+29.62	57.54	601.95	602.65
2BD	47+39.62	57.54	601.83	602.49
2BE	47+49.62	57.54	601.71	602.33
2BF	47+59.62	57.54	601.58	602.16
2BG	47+69.62	57.54	601.45	601.97
2BH	47+79.62	57.54	601.32	601.78
2BI	47+89.62	57.54	601.18	601.59
2BJ	47+99.62	57.54	601.04	601.39
2BK	48+09.62	57.54	600.89	601.18
2BL	48+19.62	57.54	600.74	600.98
2BM	48+29.62	57.54	600.59	600.77
2BN	48+39.62	57.54	600.43	600.57
2BO	48+49.62	57.54	600.27	600.37
2BP	48+59.62	57.54	600.10	600.17
2BQ	48+69.62	57.54	599.94	599.98
℄ BRG. PIER 4 EB	48+83.62	57.54	599.69	599.71
2BR	48+93.62	57.54	599.51	599.53
2BS	49+03.62	57.54	599.33	599.35
2BT	49+13.62	57.54	599.14	599.18
2BU	49+23.62	57.54	598.95	599.01
2BV	49+33.62	57.54	598.76	598.84
2BW	49+43.62	57.54	598.56	598.67
2BX	49+53.62	57.54	598.35	598.51
2BY	49+63.62	57.54	598.15	598.35
2BZ	49+73.62	57.54	597.93	598.18
2CA	49+83.62	57.54	597.72	598.01
2CB	49+93.62	57.54	597.50	597.84
2CC	50+03.62	57.54	597.28	597.66
2CD	50+13.62	57.54	597.05	597.46
2CE	50+23.62	57.54	596.82	597.26
2CF	50+33.62	57.54	596.58	597.05
2CG	50+43.62	57.54	596.34	596.83
2CH	50+53.62	57.54	596.10	596.60
2CI	50+63.62	57.54	595.85	596.36
2CJ	50+73.62	57.54	595.60	596.10
2CK	50+83.62	57.54	595.35	595.84
2CL	50+93.62	57.54	595.09	595.56
2CM	51+03.62	57.54	594.83	595.27
2CN	51+13.62	57.54	594.56	594.97
2CO	51+23.62	57.54	594.29	594.66
2CP	51+33.62	57.54	594.01	594.33
2CQ	51+43.62	57.54	593.73	594.00
2CR	51+53.62	57.54	593.45	593.66
2CS	51+63.62	57.54	593.16	593.31
2CT	51+73.62	57.54	592.87	592.96
℄ W BRG PIER 5 EB	51+83.62	57.54	592.58	592.60
℄ PIER 5 EB	51+85.12	57.54	592.53	592.55

INSIDE FACE OF SOUTH PARAPET - EB

Location	Station	Offset	Theoretical Grade Elevations	Theoretical Grade Elevations Adjusted For Dead Load Deflection and Grinding
℄ PIER 2 EB	41+68.45	60.00	602.08	602.10
℄ E BRG PIER 2 EB	41+69.62	60.00	602.10	602.12
2A	41+79.62	60.00	602.20	602.29
2B	41+89.62	60.00	602.31	602.46
2C	41+99.62	60.00	602.40	602.62
2D	42+09.62	60.00	602.50	602.77
2E	42+19.62	60.00	602.59	602.91
2F	42+29.62	60.00	602.67	603.04
2G	42+39.62	60.00	602.76	603.17
2H	42+49.62	60.00	602.84	603.28
2I	42+59.62	60.00	602.91	603.38
2J	42+69.62	60.00	602.98	603.47
2K	42+79.62	60.00	603.05	603.55
2L	42+89.62	60.00	603.11	603.61
2M	42+99.62	60.00	603.17	603.67
2N	43+09.62	60.00	603.22	603.71
2O	43+19.62	60.00	603.27	603.74
2P	43+29.62	60.00	603.32	603.76
2Q	43+39.62	60.00	603.36	603.77
2R	43+49.62	60.00	603.40	603.78
2S	43+59.62	60.00	603.43	603.77
2T	43+69.62	60.00	603.46	603.76
2U	43+79.62	60.00	603.49	603.74
2V	43+89.62	60.00	603.51	603.71
2W	43+99.62	60.00	603.53	603.69
2X	44+09.62	60.00	603.55	603.66
2Y	44+19.62	60.00	603.56	603.64
2Z	44+29.62	60.00	603.56	603.62
2AA	44+39.62	60.00	603.57	603.60
2AB	44+49.62	60.00	603.56	603.59
2AC	44+59.62	60.00	603.56	603.58
℄ BRG. PIER 3 EB	44+69.62	60.00	603.55	603.57
2AD	44+79.62	60.00	603.54	603.57
2AE	44+89.62	60.00	603.52	603.58
2AF	44+99.62	60.00	603.50	603.58
2AG	45+09.62	60.00	603.47	603.59
2AH	45+19.62	60.00	603.44	603.61
2AI	45+29.62	60.00	603.41	603.62
2AJ	45+39.62	60.00	603.37	603.64
2AK	45+49.62	60.00	603.33	603.66
2AL	45+59.62	60.00	603.28	603.67
2AM	45+69.62	60.00	603.23	603.68
2AN	45+79.62	60.00	603.18	603.68
2AO	45+89.62	60.00	603.12	603.68
2AP	45+99.62	60.00	603.06	603.67
2AQ	46+09.62	60.00	602.99	603.65
2AR	46+19.62	60.00	602.93	603.61
2AS	46+29.62	60.00	602.85	603.57
2AT	46+39.62	60.00	602.77	603.52
2AU	46+49.62	60.00	602.69	603.46
2AV	46+59.62	60.00	602.61	603.39
2AW	46+69.62	60.00	602.52	603.31
2AX	46+79.62	60.00	602.42	603.22
2AY	46+89.62	60.00	602.33	603.12
2AZ	46+99.62	60.00	602.22	603.00

NOTES:

1. All Elevations and Offsets are in feet.
2. Offsets are measured with respect to the I-80 EB PGL. Negative offsets are left and positive are right of the PGL.

INSIDE FACE OF SOUTH PARAPET - EB (CONT.)

Location	Station	Offset	Theoretical Grade Elevations	Theoretical Grade Elevations Adjusted For Dead Load Deflection and Grinding
2BA	47+09.62	60.00	602.12	602.88
2BB	47+19.62	60.00	602.01	602.74
2BC	47+29.62	60.00	601.90	602.60
2BD	47+39.62	60.00	601.78	602.44
2BE	47+49.62	60.00	601.66	602.28
2BF	47+59.62	60.00	601.53	602.11
2BG	47+69.62	60.00	601.40	601.92
2BH	47+79.62	60.00	601.27	601.74
2BI	47+89.62	60.00	601.13	601.54
2BJ	47+99.62	60.00	600.99	601.34
2BK	48+09.62	60.00	600.84	601.14
2BL	48+19.62	60.00	600.69	600.93
2BM	48+29.62	60.00	600.54	600.73
2BN	48+39.62	60.00	600.38	600.52
2BO	48+49.62	60.00	600.22	600.32
2BP	48+59.62	60.00	600.06	600.12
2BQ	48+69.62	60.00	599.89	599.93
℄ BRG. PIER 4 EB	48+83.62	60.00	599.64	599.66
2BR	48+93.62	60.00	599.46	599.48
2BS	49+03.62	60.00	599.28	599.30
2BT	49+13.62	60.00	599.09	599.13
2BU	49+23.62	60.00	598.90	598.96
2BV	49+33.62	60.00	598.71	598.79
2BW	49+43.62	60.00	598.51	598.62
2BX	49+53.62	60.00	598.30	598.46
2BY	49+63.62	60.00	598.10	598.30
2BZ	49+73.62	60.00	597.89	598.13
2CA	49+83.62	60.00	597.67	597.96
2CB	49+93.62	60.00	597.45	597.79
2CC	50+03.62	60.00	597.23	597.61
2CD	50+13.62	60.00	597.00	597.42
2CE	50+23.62	60.00	596.77	597.22
2CF	50+33.62	60.00	596.53	597.00
2CG	50+43.62	60.00	596.30	596.78
2CH	50+53.62	60.00	596.05	596.55
2CI	50+63.62	60.00	595.81	596.31
2CJ	50+73.62	60.00	595.55	596.05
2CK	50+83.62	60.00	595.30	595.79
2CL	50+93.62	60.00	595.04	595.51
2CM	51+03.62	60.00	594.78	595.22
2CN	51+13.62	60.00	594.51	594.92
2CO	51+23.62	60.00	594.24	594.61
2CP	51+33.62	60.00	593.96	594.29
2CQ	51+43.62	60.00	593.68	593.95
2CR	51+53.62	60.00	593.40	593.61
2CS	51+63.62	60.00	593.11	593.26
2CT	51+73.62	60.00	592.82	592.91
℄ W BRG PIER 5 EB	51+83.62	60.00	592.53	592.55
℄ PIER 5 EB	51+85.12	60.00	592.48	592.50

NOTES:

1. All Elevations and Offsets are in feet.
2. Offsets are measured with respect to the I-80 EB PGL. Negative offsets are left and positive are right of the PGL.

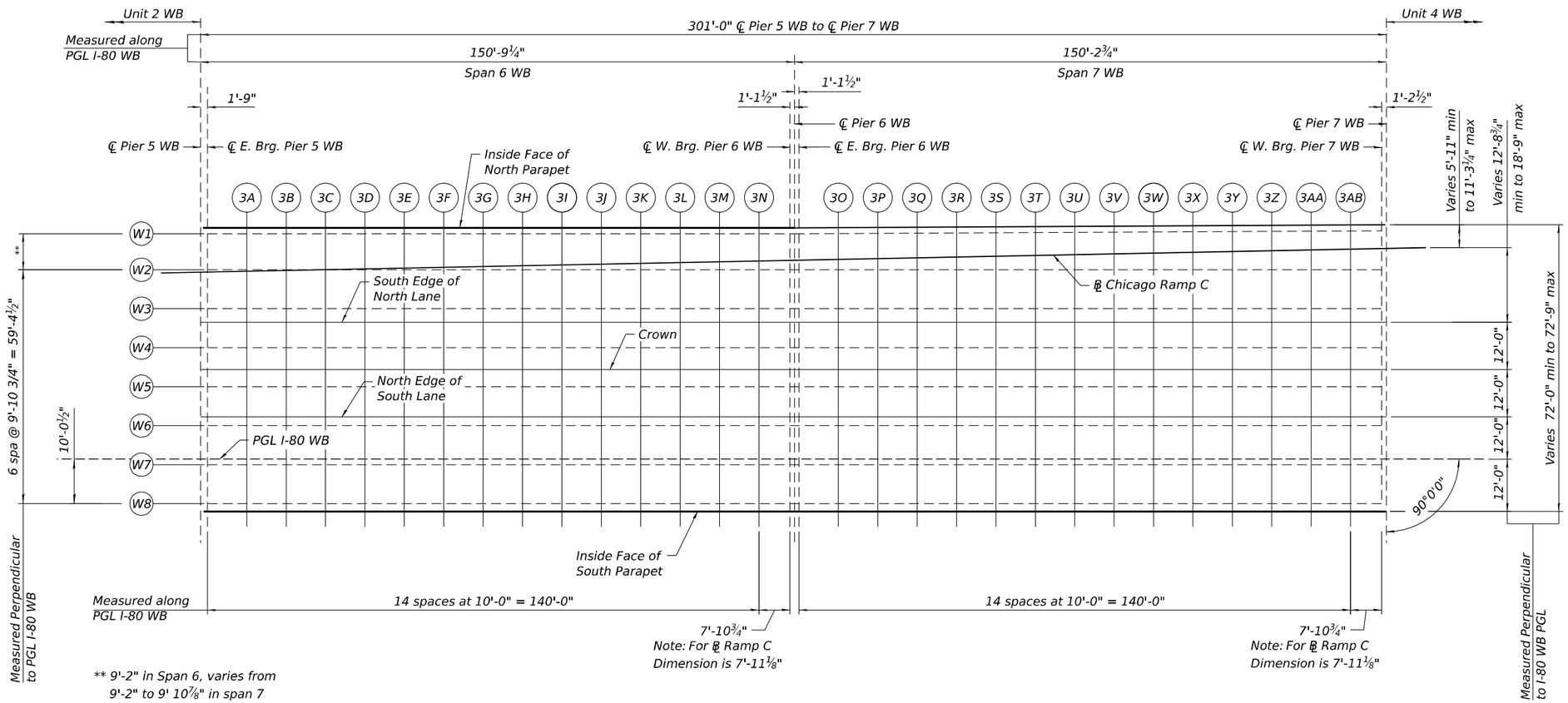

** 9'-2" in Span 6, varies from 9'-2" to 9' 10⅞" in span 7

PLAN -UNIT 3 WB

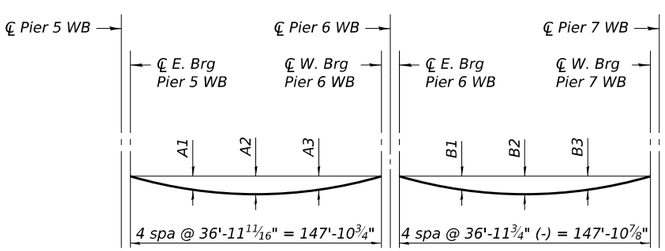

DEAD LOAD DEFLECTION DIAGRAM

(Includes weight of concrete, excluding beams)

Note:
The above deflections are not to be used in the field if the engineer is working from the grade elevations adjusted for dead load deflections and grinding as shown on sheets S-65 to S-71.

Girder	DEAD LOAD DEFLECTIONS (INCHES)					
	Span 6 WB			Span 7 WB		
	A1	A2	A3	B1	B2	B3
W1	2 3/8	3 1/4	2 3/8	2 3/8	3 1/4	2 3/8
W2	2 1/4	3 1/8	2 1/4	2 1/4	3 1/8	2 3/8
W3	2 3/8	3 1/4	2 3/8	2 3/8	3 1/4	2 3/8
W4	2 1/4	3	2 1/4	2 1/4	3	2 1/4
W5	2 1/4	3	2 1/4	2 1/4	3	2 1/4
W6	2 3/8	3 1/8	2 1/4	2 1/4	3 1/8	2 1/4
W7	2 3/8	3 1/8	2 1/4	2 1/4	3 1/8	2 1/4
W8	2 1/8	2 7/8	2 1/8	2 1/8	2 7/8	2 1/8

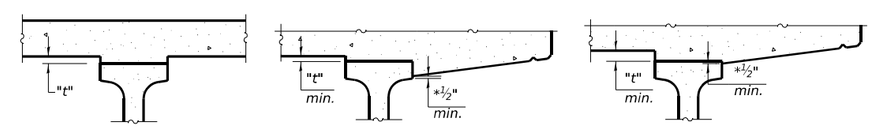

* Variable (not less ½")

At Minimum Fillet

At Maximum Fillet

INTERIOR BEAMS

EXTERIOR BEAMS

FILLET HEIGHTS

To determine "t": After all precast prestressed beams have been erected, elevations of the top flanges of the beams shall be taken at intervals shown. These elevations subtracted from the "Theoretical Grade Elevations Adjusted for Dead Load Deflection and Grinding" shown on sheets S-67 to S-71, minus the initial slab thickness prior to grinding, equals the fillet heights "t" above top flange of beams.

The slab is to be ground after curing to achieve smoothness, but the slab is not to be ground to elevations below the "Theoretical Grade Elevations" shown on sheets S-67 to S-71. For grinding the deck, see Special Provisions.

NOTES:

1. Up to ¼ inch to be ground off the bridge deck and bridge approach slabs. The Profile Grade shows the final grade after grinding.

WSP USA Inc.
30 N. LASALLE STREET
SUITE 4200
CHICAGO, IL 60602
TEL: (312) 782-8150
FAX: (312) 782-1684

USER NAME = USSJ696614	DESIGNED - LAS	REVISED -	
	CHECKED - PJL	REVISED -	
PLOT SCALE = 32:0.0000 ':" / in.	DRAWN - GM	REVISED -	
PLOT DATE = 11/5/2025	CHECKED - LAS	REVISED -	

STATE OF ILLINOIS
DEPARTMENT OF TRANSPORTATION

TOP OF SLAB ELEVATION PLAN - UNIT 3 WB
STRUCTURE NUMBER 099-8309 WB AND 099-8325 EB

SHEET S-66 OF S-333 SHEETS

F.A.I RTE.	SECTION	COUNTY	TOTAL SHEETS	SHEET NO.
I-80	FAI 80 21 STRUCTURE 2	WILL	1230	647
		CONTRACT NO. 62R23		
		ILLINOIS	FED. AID PROJECT	

INSIDE FACE OF NORTH PARAPET - WB

Location	Station	Offset	Theoretical Grade Elevations	Theoretical Grade Elevations Adjusted for Dead Load Deflection and Grinding
℄ PIER 5 WB	52+09.88	-60.00	591.73	591.75
℄ E BRG. PIER 5 WB	52+11.63	-60.00	591.68	591.70
3A	52+21.63	-60.00	591.37	591.46
3B	52+31.63	-60.00	591.07	591.21
3C	52+41.63	-60.00	590.76	590.96
3D	52+51.63	-60.00	590.45	590.69
3E	52+61.63	-60.00	590.15	590.41
3F	52+71.63	-60.00	589.84	590.12
3G	52+81.63	-60.00	589.53	589.82
3H	52+91.63	-60.00	589.23	589.51
3I	53+01.63	-60.00	588.92	589.19
3J	53+11.63	-60.00	588.61	588.86
3K	53+21.63	-60.00	588.31	588.53
3L	53+31.63	-60.00	588.00	588.18
3M	53+41.63	-60.00	587.69	587.82
3N	53+51.63	-60.00	587.39	587.46
℄ W BRG PIER 6 WB	53+59.53	-60.00	587.15	587.17
℄ PIER 6 WB	53+60.65	-60.00	587.11	587.13
℄ E BRG PIER 6 WB	53+61.78	-60.00	587.08	587.10
3O	53+71.77	-60.05	586.77	586.85
3P	53+81.77	-60.09	586.46	586.60
3Q	53+91.77	-60.14	586.15	586.34
3R	54+01.77	-60.18	585.85	586.07
3S	54+11.77	-60.23	585.54	585.79
3T	54+21.77	-60.27	585.23	585.51
3U	54+31.77	-60.32	584.92	585.21
3V	54+41.77	-60.36	584.62	584.90
3W	54+51.77	-60.40	584.31	584.59
3X	54+61.77	-60.45	584.00	584.26
3Y	54+71.77	-60.49	583.68	583.91
3Z	54+81.77	-60.54	583.36	583.55
3AA	54+91.77	-60.58	583.04	583.18
3AB	55+01.77	-60.63	582.72	582.79
℄ W. BRG. PIER 7 WB	55+09.67	-60.66	582.46	582.48
℄ PIER 7 WB	55+10.88	-60.67	582.41	582.43

BEAM W1

Location	Station	Offset	Theoretical Grade Elevations	Theoretical Grade Elevations Adjusted for Dead Load Deflection and Grinding
℄ PIER 5 WB	52+09.88	-58.50	591.76	591.78
℄ E BRG. PIER 5 WB	52+11.63	-58.50	591.71	591.73
3A	52+21.63	-58.50	591.40	591.49
3B	52+31.63	-58.50	591.10	591.24
3C	52+41.63	-58.50	590.79	590.99
3D	52+51.63	-58.50	590.48	590.72
3E	52+61.63	-58.50	590.18	590.44
3F	52+71.63	-58.50	589.87	590.15
3G	52+81.63	-58.50	589.56	589.85
3H	52+91.63	-58.50	589.26	589.54
3I	53+01.63	-58.50	588.95	589.22
3J	53+11.63	-58.50	588.64	588.89
3K	53+21.63	-58.50	588.34	588.56
3L	53+31.63	-58.50	588.03	588.21
3M	53+41.63	-58.50	587.72	587.85
3N	53+51.63	-58.50	587.42	587.49
℄ W BRG PIER 6 WB	53+59.53	-58.50	587.18	587.20
℄ PIER 6 WB	53+60.65	-58.50	587.14	587.16
℄ E BRG PIER 6 WB	53+61.78	-58.51	587.11	587.13
3O	53+71.77	-58.56	586.80	586.88
3P	53+81.77	-58.61	586.49	586.63
3Q	53+91.77	-58.66	586.18	586.37
3R	54+01.77	-58.71	585.88	586.10
3S	54+11.77	-58.76	585.57	585.82
3T	54+21.77	-58.81	585.26	585.54
3U	54+31.77	-58.86	584.95	585.24
3V	54+41.77	-58.91	584.65	584.93
3W	54+51.77	-58.96	584.34	584.62
3X	54+61.77	-59.01	584.03	584.29
3Y	54+71.77	-59.06	583.71	583.94
3Z	54+81.77	-59.11	583.39	583.58
3AA	54+91.77	-59.16	583.07	583.21
3AB	55+01.77	-59.21	582.75	582.82
℄ W. BRG. PIER 7 WB	55+09.67	-59.24	582.49	582.51
℄ PIER 7 WB	55+10.88	-59.25	582.44	582.46

PROP. ℄ RAMP C

Location	Station	Offset	Theoretical Grade Elevations	Theoretical Grade Elevations Adjusted for Dead Load Deflection and Grinding
℄ PIER 5 WB	52+09.88	-48.73	591.96	591.98
℄ E BRG. PIER 5 WB	52+11.63	-48.77	591.90	591.93
3A	52+21.63	-48.97	591.59	591.68
3B	52+31.63	-49.17	591.28	591.42
3C	52+41.62	-49.37	590.97	591.16
3D	52+51.62	-49.57	590.66	590.89
3E	52+61.62	-49.77	590.35	590.60
3F	52+71.62	-49.97	590.04	590.31
3G	52+81.62	-50.17	589.73	590.01
3H	52+91.61	-50.37	589.42	589.69
3I	53+01.61	-50.57	589.11	589.37
3J	53+11.61	-50.77	588.80	589.04
3K	53+21.61	-50.96	588.49	588.70
3L	53+31.61	-51.16	588.18	588.35
3M	53+41.60	-51.36	587.87	587.99
3N	53+51.60	-51.56	587.56	587.63
℄ W BRG PIER 6 WB	53+59.53	-51.72	587.31	587.33
℄ PIER 6 WB	53+60.65	-51.75	587.28	587.30
℄ E BRG PIER 6 WB	53+61.78	-51.77	587.24	587.26
3O	53+71.77	-51.97	586.93	587.01
3P	53+81.77	-52.17	586.62	586.75
3Q	53+91.77	-52.37	586.31	586.49
3R	54+01.77	-52.57	586.00	586.22
3S	54+11.77	-52.77	585.69	585.93
3T	54+21.76	-52.97	585.38	585.65
3U	54+31.76	-53.17	585.07	585.34
3V	54+41.76	-53.37	584.76	585.03
3W	54+51.76	-53.57	584.45	584.71
3X	54+61.76	-53.77	584.14	584.38
3Y	54+71.75	-53.97	583.82	584.03
3Z	54+81.75	-54.17	583.49	583.67
3AA	54+91.75	-54.37	583.17	583.30
3AB	55+01.75	-54.57	582.84	582.91
℄ W. BRG. PIER 7 WB	55+09.67	-54.73	582.58	582.60
℄ PIER 7 WB	55+10.88	-54.75	582.53	582.55

NOTES:

1. All Elevations and Offsets are in feet.
2. Offsets are measured with respect to the I-80 WB PGL. Negative offsets are left and positive are right of the PGL.

BEAM W2

Location	Station	Offset	Theoretical Grade Elevations	Theoretical Grade Elevations Adjusted for Dead Load Deflection and Grinding
℄ PIER 5 WB	52+09.88	-49.33	591.95	591.97
℄ E BRG. PIER 5 WB	52+11.63	-49.33	591.89	591.91
3A	52+21.63	-49.33	591.59	591.67
3B	52+31.63	-49.33	591.28	591.42
3C	52+41.63	-49.33	590.97	591.16
3D	52+51.63	-49.33	590.67	590.89
3E	52+61.63	-49.33	590.36	590.61
3F	52+71.63	-49.33	590.05	590.32
3G	52+81.63	-49.33	589.75	590.02
3H	52+91.63	-49.33	589.44	589.71
3I	53+01.63	-49.33	589.13	589.40
3J	53+11.63	-49.33	588.83	589.07
3K	53+21.63	-49.33	588.52	588.73
3L	53+31.63	-49.33	588.21	588.39
3M	53+41.63	-49.33	587.91	588.03
3N	53+51.63	-49.33	587.60	587.67
℄ W BRG PIER 6 WB	53+59.53	-49.33	587.36	587.38
℄ PIER 6 WB	53+60.65	-49.33	587.32	587.35
℄ E BRG PIER 6 WB	53+61.78	-49.33	587.29	587.31
3O	53+71.78	-49.33	586.98	587.06
3P	53+81.78	-49.33	586.68	586.81
3Q	53+91.78	-49.33	586.37	586.55
3R	54+01.78	-49.33	586.06	586.28
3S	54+11.78	-49.33	585.76	586.00
3T	54+21.78	-49.33	585.45	585.72
3U	54+31.78	-49.33	585.14	585.42
3V	54+41.78	-49.33	584.84	585.11
3W	54+51.78	-49.33	584.53	584.80
3X	54+61.78	-49.33	584.22	584.47
3Y	54+71.78	-49.33	583.91	584.12
3Z	54+81.78	-49.33	583.59	583.77
3AA	54+91.78	-49.33	583.27	583.40
3AB	55+01.78	-49.33	582.95	583.02
℄ W. BRG. PIER 7 WB	55+09.67	-49.33	582.69	582.71
℄ PIER 7 WB	55+10.88	-49.33	582.64	582.66

BEAM W3

Location	Station	Offset	Theoretical Grade Elevations	Theoretical Grade Elevations Adjusted for Dead Load Deflection and Grinding
℄ PIER 5 WB	52+09.88	-39.44	592.14	592.17
℄ E BRG. PIER 5 WB	52+11.63	-39.44	592.09	592.11
3A	52+21.63	-39.44	591.78	591.87
3B	52+31.63	-39.44	591.48	591.62
3C	52+41.63	-39.44	591.17	591.37
3D	52+51.63	-39.44	590.86	591.10
3E	52+61.63	-39.44	590.56	590.82
3F	52+71.63	-39.44	590.25	590.53
3G	52+81.63	-39.44	589.94	590.23
3H	52+91.63	-39.44	589.64	589.92
3I	53+01.63	-39.44	589.33	589.60
3J	53+11.63	-39.44	589.03	589.28
3K	53+21.63	-39.44	588.72	588.94
3L	53+31.63	-39.44	588.41	588.59
3M	53+41.63	-39.44	588.11	588.23
3N	53+51.63	-39.44	587.80	587.87
℄ W BRG PIER 6 WB	53+59.53	-39.44	587.56	587.58
℄ PIER 6 WB	53+60.65	-39.44	587.52	587.54
℄ E BRG PIER 6 WB	53+61.78	-39.44	587.49	587.51
3O	53+71.78	-39.44	587.18	587.26
3P	53+81.78	-39.44	586.87	587.01
3Q	53+91.78	-39.44	586.57	586.76
3R	54+01.78	-39.44	586.26	586.49
3S	54+11.78	-39.44	585.96	586.21
3T	54+21.78	-39.44	585.65	585.93
3U	54+31.78	-39.44	585.34	585.63
3V	54+41.78	-39.44	585.04	585.32
3W	54+51.78	-39.44	584.73	585.01
3X	54+61.78	-39.44	584.42	584.68
3Y	54+71.78	-39.44	584.11	584.33
3Z	54+81.78	-39.44	583.79	583.97
3AA	54+91.78	-39.44	583.47	583.60
3AB	55+01.78	-39.44	583.15	583.22
℄ W. BRG. PIER 7 WB	55+09.67	-39.44	582.89	582.91
℄ PIER 7 WB	55+10.88	-39.44	582.84	582.86

SOUTH EDGE OF NORTH LANE - WB

Location	Station	Offset	Theoretical Grade Elevations	Theoretical Grade Elevations Adjusted for Dead Load Deflection and Grinding
℄ PIER 5 WB	52+09.88	-36.00	592.21	592.23
℄ E BRG. PIER 5 WB	52+11.63	-36.00	592.16	592.18
3A	52+21.63	-36.00	591.85	591.94
3B	52+31.63	-36.00	591.55	591.69
3C	52+41.63	-36.00	591.24	591.44
3D	52+51.63	-36.00	590.93	591.17
3E	52+61.63	-36.00	590.63	590.89
3F	52+71.63	-36.00	590.32	590.60
3G	52+81.63	-36.00	590.01	590.30
3H	52+91.63	-36.00	589.71	589.99
3I	53+01.63	-36.00	589.40	589.67
3J	53+11.63	-36.00	589.09	589.34
3K	53+21.63	-36.00	588.79	589.01
3L	53+31.63	-36.00	588.48	588.66
3M	53+41.63	-36.00	588.17	588.30
3N	53+51.63	-36.00	587.87	587.94
℄ W BRG PIER 6 WB	53+59.53	-36.00	587.63	587.65
℄ PIER 6 WB	53+60.65	-36.00	587.59	587.61
℄ E BRG PIER 6 WB	53+61.78	-36.00	587.56	587.58
3O	53+71.78	-36.00	587.25	587.33
3P	53+81.78	-36.00	586.94	587.08
3Q	53+91.78	-36.00	586.64	586.83
3R	54+01.78	-36.00	586.33	586.56
3S	54+11.78	-36.00	586.02	586.28
3T	54+21.78	-36.00	585.72	585.99
3U	54+31.78	-36.00	585.41	585.70
3V	54+41.78	-36.00	585.10	585.39
3W	54+51.78	-36.00	584.80	585.07
3X	54+61.78	-36.00	584.49	584.75
3Y	54+71.78	-36.00	584.17	584.40
3Z	54+81.78	-36.00	583.85	584.04
3AA	54+91.78	-36.00	583.53	583.67
3AB	55+01.78	-36.00	583.21	583.29
℄ W. BRG. PIER 7 WB	55+09.67	-36.00	582.96	582.98
℄ PIER 7 WB	55+10.88	-36.00	582.91	582.93

NOTES:

1. All Elevations and Offsets are in feet.
2. Offsets are measured with respect to the I-80 WB PGL. Negative offsets are left and positive are right of the PGL.

BEAM W4

Location	Station	Offset	Theoretical Grade Elevations	Theoretical Grade Elevations Adjusted for Dead Load Deflection and Grinding
℄ PIER 5 WB	52+09.88	-29.54	592.31	592.33
℄ E BRG. PIER 5 WB	52+11.63	-29.54	592.26	592.28
3A	52+21.63	-29.54	591.95	592.03
3B	52+31.63	-29.54	591.64	591.78
3C	52+41.63	-29.54	591.34	591.52
3D	52+51.63	-29.54	591.03	591.25
3E	52+61.63	-29.54	590.72	590.97
3F	52+71.63	-29.54	590.42	590.68
3G	52+81.63	-29.54	590.11	590.38
3H	52+91.63	-29.54	589.80	590.07
3I	53+01.63	-29.54	589.50	589.76
3J	53+11.63	-29.54	589.19	589.43
3K	53+21.63	-29.54	588.88	589.09
3L	53+31.63	-29.54	588.58	588.75
3M	53+41.63	-29.54	588.27	588.40
3N	53+51.63	-29.54	587.96	588.03
℄ W BRG PIER 6 WB	53+59.53	-29.54	587.72	587.74
℄ PIER 6 WB	53+60.65	-29.54	587.69	587.71
℄ E BRG PIER 6 WB	53+61.78	-29.54	587.65	587.67
3O	53+71.78	-29.54	587.35	587.43
3P	53+81.78	-29.54	587.04	587.18
3Q	53+91.78	-29.54	586.73	586.92
3R	54+01.78	-29.54	586.43	586.64
3S	54+11.78	-29.54	586.12	586.36
3T	54+21.78	-29.54	585.81	586.08
3U	54+31.78	-29.54	585.51	585.78
3V	54+41.78	-29.54	585.20	585.47
3W	54+51.78	-29.54	584.89	585.15
3X	54+61.78	-29.54	584.59	584.83
3Y	54+71.78	-29.54	584.27	584.48
3Z	54+81.78	-29.54	583.95	584.12
3AA	54+91.78	-29.54	583.63	583.76
3AB	55+01.78	-29.54	583.31	583.38
℄ W. BRG. PIER 7 WB	55+09.67	-29.54	583.05	583.07
℄ PIER 7 WB	55+10.88	-29.54	583.00	583.02

CROWN - WB

Location	Station	Offset	Theoretical Grade Elevations	Theoretical Grade Elevations Adjusted for Dead Load Deflection and Grinding
℄ PIER 5 WB	52+09.88	-24.00	592.39	592.41
℄ E BRG. PIER 5 WB	52+11.63	-24.00	592.34	592.36
3A	52+21.63	-24.00	592.03	592.11
3B	52+31.63	-24.00	591.73	591.86
3C	52+41.63	-24.00	591.42	591.60
3D	52+51.63	-24.00	591.11	591.33
3E	52+61.63	-24.00	590.81	591.05
3F	52+71.63	-24.00	590.50	590.76
3G	52+81.63	-24.00	590.19	590.46
3H	52+91.63	-24.00	589.89	590.15
3I	53+01.63	-24.00	589.58	589.84
3J	53+11.63	-24.00	589.27	589.51
3K	53+21.63	-24.00	588.97	589.18
3L	53+31.63	-24.00	588.66	588.83
3M	53+41.63	-24.00	588.35	588.48
3N	53+51.63	-24.00	588.05	588.12
℄ W BRG PIER 6 WB	53+59.53	-24.00	587.81	587.83
℄ PIER 6 WB	53+60.65	-24.00	587.77	587.79
℄ E BRG PIER 6 WB	53+61.78	-24.00	587.74	587.76
3O	53+71.78	-24.00	587.43	587.51
3P	53+81.78	-24.00	587.12	587.26
3Q	53+91.78	-24.00	586.82	587.00
3R	54+01.78	-24.00	586.51	586.73
3S	54+11.78	-24.00	586.20	586.45
3T	54+21.78	-24.00	585.90	586.16
3U	54+31.78	-24.00	585.59	585.86
3V	54+41.78	-24.00	585.28	585.55
3W	54+51.78	-24.00	584.98	585.24
3X	54+61.78	-24.00	584.67	584.91
3Y	54+71.78	-24.00	584.35	584.56
3Z	54+81.78	-24.00	584.03	584.21
3AA	54+91.78	-24.00	583.71	583.84
3AB	55+01.78	-24.00	583.39	583.46
℄ W. BRG. PIER 7 WB	55+09.67	-24.00	583.14	583.16
℄ PIER 7 WB	55+10.88	-24.00	583.09	583.11

BEAM W5

Location	Station	Offset	Theoretical Grade Elevations	Theoretical Grade Elevations Adjusted for Dead Load Deflection and Grinding
℄ PIER 5 WB	52+09.88	-19.65	592.33	592.35
℄ E BRG. PIER 5 WB	52+11.63	-19.65	592.27	592.30
3A	52+21.63	-19.65	591.97	592.05
3B	52+31.63	-19.65	591.66	591.80
3C	52+41.63	-19.65	591.35	591.54
3D	52+51.63	-19.65	591.05	591.26
3E	52+61.63	-19.65	590.74	590.98
3F	52+71.63	-19.65	590.43	590.70
3G	52+81.63	-19.65	590.13	590.40
3H	52+91.63	-19.65	589.82	590.09
3I	53+01.63	-19.65	589.52	589.77
3J	53+11.63	-19.65	589.21	589.45
3K	53+21.63	-19.65	588.90	589.11
3L	53+31.63	-19.65	588.60	588.77
3M	53+41.63	-19.65	588.29	588.41
3N	53+51.63	-19.65	587.98	588.05
℄ W BRG PIER 6 WB	53+59.53	-19.65	587.74	587.76
℄ PIER 6 WB	53+60.65	-19.65	587.71	587.73
℄ E BRG PIER 6 WB	53+61.78	-19.65	587.67	587.69
3O	53+71.78	-19.65	587.36	587.45
3P	53+81.78	-19.65	587.06	587.19
3Q	53+91.78	-19.65	586.75	586.93
3R	54+01.78	-19.65	586.45	586.66
3S	54+11.78	-19.65	586.14	586.38
3T	54+21.78	-19.65	585.83	586.09
3U	54+31.78	-19.65	585.53	585.79
3V	54+41.78	-19.65	585.22	585.49
3W	54+51.78	-19.65	584.91	585.17
3X	54+61.78	-19.65	584.61	584.84
3Y	54+71.78	-19.65	584.29	584.50
3Z	54+81.78	-19.65	583.97	584.14
3AA	54+91.78	-19.65	583.65	583.77
3AB	55+01.78	-19.65	583.33	583.40
℄ W. BRG. PIER 7 WB	55+09.67	-19.65	583.07	583.09
℄ PIER 7 WB	55+10.88	-19.65	583.02	583.05

NOTES:

1. All Elevations and Offsets are in feet.
2. Offsets are measured with respect to the I-80 WB PGL. Negative offsets are left and positive are right of the PGL.

NORTH EDGE OF SOUTH LANE - WB

Location	Station	Offset	Theoretical Grade Elevations	Theoretical Grade Elevations Adjusted for Dead Load Deflection and Grinding
℄ PIER 5 WB	52+09.88	-12.00	592.21	592.23
℄ E BRG. PIER 5 WB	52+11.63	-12.00	592.16	592.18
3A	52+21.63	-12.00	591.85	591.94
3B	52+31.63	-12.00	591.55	591.69
3C	52+41.63	-12.00	591.24	591.43
3D	52+51.63	-12.00	590.93	591.16
3E	52+61.63	-12.00	590.63	590.88
3F	52+71.63	-12.00	590.32	590.59
3G	52+81.63	-12.00	590.01	590.29
3H	52+91.63	-12.00	589.71	589.98
3I	53+01.63	-12.00	589.40	589.67
3J	53+11.63	-12.00	589.09	589.34
3K	53+21.63	-12.00	588.79	589.00
3L	53+31.63	-12.00	588.48	588.66
3M	53+41.63	-12.00	588.17	588.30
3N	53+51.63	-12.00	587.87	587.94
℄ W BRG PIER 6 WB	53+59.53	-12.00	587.63	587.65
℄ PIER 6 WB	53+60.65	-12.00	587.59	587.61
℄ E BRG PIER 6 WB	53+61.78	-12.00	587.56	587.58
3O	53+71.78	-12.00	587.25	587.33
3P	53+81.78	-12.00	586.94	587.08
3Q	53+91.78	-12.00	586.64	586.82
3R	54+01.78	-12.00	586.33	586.55
3S	54+11.78	-12.00	586.02	586.27
3T	54+21.78	-12.00	585.72	585.99
3U	54+31.78	-12.00	585.41	585.69
3V	54+41.78	-12.00	585.10	585.38
3W	54+51.78	-12.00	584.80	585.07
3X	54+61.78	-12.00	584.49	584.74
3Y	54+71.78	-12.00	584.17	584.39
3Z	54+81.78	-12.00	583.85	584.03
3AA	54+91.78	-12.00	583.53	583.66
3AB	55+01.78	-12.00	583.21	583.29
℄ W. BRG. PIER 7 WB	55+09.67	-12.00	582.96	582.98
℄ PIER 7 WB	55+10.88	-12.00	582.92	582.94

BEAM W6

Location	Station	Offset	Theoretical Grade Elevations	Theoretical Grade Elevations Adjusted for Dead Load Deflection and Grinding
℄ PIER 5 WB	52+09.88	-9.75	592.17	592.19
℄ E BRG. PIER 5 WB	52+11.63	-9.75	592.11	592.14
3A	52+21.63	-9.75	591.81	591.89
3B	52+31.63	-9.75	591.50	591.64
3C	52+41.63	-9.75	591.19	591.38
3D	52+51.63	-9.75	590.89	591.11
3E	52+61.63	-9.75	590.58	590.83
3F	52+71.63	-9.75	590.28	590.55
3G	52+81.63	-9.75	589.97	590.25
3H	52+91.63	-9.75	589.66	589.94
3I	53+01.63	-9.75	589.36	589.62
3J	53+11.63	-9.75	589.05	589.29
3K	53+21.63	-9.75	588.74	588.96
3L	53+31.63	-9.75	588.44	588.61
3M	53+41.63	-9.75	588.13	588.26
3N	53+51.63	-9.75	587.82	587.89
℄ W BRG PIER 6 WB	53+59.53	-9.75	587.58	587.60
℄ PIER 6 WB	53+60.65	-9.75	587.55	587.57
℄ E BRG PIER 6 WB	53+61.78	-9.75	587.51	587.53
3O	53+71.78	-9.75	587.21	587.29
3P	53+81.78	-9.75	586.90	587.04
3Q	53+91.78	-9.75	586.59	586.78
3R	54+01.78	-9.75	586.29	586.51
3S	54+11.78	-9.75	585.98	586.23
3T	54+21.78	-9.75	585.67	585.94
3U	54+31.78	-9.75	585.37	585.64
3V	54+41.78	-9.75	585.06	585.34
3W	54+51.78	-9.75	584.75	585.02
3X	54+61.78	-9.75	584.45	584.69
3Y	54+71.78	-9.75	584.13	584.35
3Z	54+81.78	-9.75	583.81	583.99
3AA	54+91.78	-9.75	583.50	583.63
3AB	55+01.78	-9.75	583.18	583.25
℄ W. BRG. PIER 7 WB	55+09.67	-9.75	582.93	582.95
℄ PIER 7 WB	55+10.88	-9.75	582.88	582.90

PGL I-80 WB

Location	Station	Offset	Theoretical Grade Elevations	Theoretical Grade Elevations Adjusted for Dead Load Deflection and Grinding
℄ PIER 5 WB	52+09.88	0.00	591.97	591.99
℄ E BRG. PIER 5 WB	52+11.63	0.00	591.92	591.94
3A	52+21.63	0.00	591.61	591.70
3B	52+31.63	0.00	591.31	591.45
3C	52+41.63	0.00	591.00	591.19
3D	52+51.63	0.00	590.69	590.92
3E	52+61.63	0.00	590.39	590.64
3F	52+71.63	0.00	590.08	590.35
3G	52+81.63	0.00	589.77	590.05
3H	52+91.63	0.00	589.47	589.74
3I	53+01.63	0.00	589.16	589.43
3J	53+11.63	0.00	588.85	589.10
3K	53+21.63	0.00	588.55	588.76
3L	53+31.63	0.00	588.24	588.42
3M	53+41.63	0.00	587.93	588.06
3N	53+51.63	0.00	587.63	587.70
℄ W BRG PIER 6 WB	53+59.53	0.00	587.39	587.41
℄ PIER 6 WB	53+60.65	0.00	587.35	587.37
℄ E BRG PIER 6 WB	53+61.78	0.00	587.32	587.34
3O	53+71.78	0.00	587.01	587.09
3P	53+81.78	0.00	586.70	586.84
3Q	53+91.78	0.00	586.40	586.58
3R	54+01.78	0.00	586.09	586.31
3S	54+11.78	0.00	585.78	586.03
3T	54+21.78	0.00	585.48	585.75
3U	54+31.78	0.00	585.17	585.45
3V	54+41.78	0.00	584.86	585.14
3W	54+51.78	0.00	584.56	584.83
3X	54+61.78	0.00	584.25	584.50
3Y	54+71.78	0.00	583.94	584.16
3Z	54+81.78	0.00	583.64	583.82
3AA	54+91.78	0.00	583.33	583.46
3AB	55+01.78	0.00	583.02	583.10
℄ W. BRG. PIER 7 WB	55+09.67	0.00	582.78	582.80
℄ PIER 7 WB	55+10.88	0.00	582.75	582.77

NOTES:

1. All Elevations and Offsets are in feet.
2. Offsets are measured with respect to the I-80 WB PGL. Negative offsets are left and positive are right of the PGL.

BEAM W7

Location	Station	Offset	Theoretical Grade Elevations	Theoretical Grade Elevations Adjusted for Dead Load Deflection and Grinding
℄ PIER 5 WB	52+09.88	0.15	591.97	591.99
℄ E BRG. PIER 5 WB	52+11.63	0.15	591.92	591.94
3A	52+21.63	0.15	591.61	591.69
3B	52+31.63	0.15	591.30	591.44
3C	52+41.63	0.15	591.00	591.19
3D	52+51.63	0.15	590.69	590.91
3E	52+61.63	0.15	590.38	590.64
3F	52+71.63	0.15	590.08	590.35
3G	52+81.63	0.15	589.77	590.05
3H	52+91.63	0.15	589.46	589.74
3I	53+01.63	0.15	589.16	589.42
3J	53+11.63	0.15	588.85	589.10
3K	53+21.63	0.15	588.54	588.76
3L	53+31.63	0.15	588.24	588.41
3M	53+41.63	0.15	587.93	588.06
3N	53+51.63	0.15	587.62	587.69
℄ W BRG PIER 6 WB	53+59.53	0.15	587.38	587.40
℄ PIER 6 WB	53+60.65	0.15	587.35	587.37
℄ E BRG PIER 6 WB	53+61.78	0.15	587.31	587.33
3O	53+71.78	0.15	587.01	587.09
3P	53+81.78	0.15	586.70	586.84
3Q	53+91.78	0.15	586.39	586.58
3R	54+01.78	0.15	586.09	586.31
3S	54+11.78	0.15	585.78	586.03
3T	54+21.78	0.15	585.47	585.74
3U	54+31.78	0.15	585.17	585.44
3V	54+41.78	0.15	584.86	585.14
3W	54+51.78	0.15	584.55	584.82
3X	54+61.78	0.15	584.25	584.49
3Y	54+71.78	0.15	583.94	584.16
3Z	54+81.78	0.15	583.64	583.81
3AA	54+91.78	0.15	583.33	583.46
3AB	55+01.78	0.15	583.02	583.09
℄ W. BRG. PIER 7 WB	55+09.67	0.15	582.78	582.80
℄ PIER 7 WB	55+10.88	0.15	582.74	582.76

BEAM W8

Location	Station	Offset	Theoretical Grade Elevations	Theoretical Grade Elevations Adjusted for Dead Load Deflection and Grinding
℄ PIER 5 WB	52+09.88	10.04	591.77	591.79
℄ E BRG. PIER 5 WB	52+11.63	10.04	591.72	591.74
3A	52+21.63	10.04	591.41	591.49
3B	52+31.63	10.04	591.11	591.24
3C	52+41.63	10.04	590.80	590.97
3D	52+51.63	10.04	590.49	590.70
3E	52+61.63	10.04	590.19	590.42
3F	52+71.63	10.04	589.88	590.13
3G	52+81.63	10.04	589.57	589.83
3H	52+91.63	10.04	589.27	589.52
3I	53+01.63	10.04	588.96	589.21
3J	53+11.63	10.04	588.65	588.88
3K	53+21.63	10.04	588.35	588.54
3L	53+31.63	10.04	588.04	588.20
3M	53+41.63	10.04	587.73	587.85
3N	53+51.63	10.04	587.43	587.49
℄ W BRG PIER 6 WB	53+59.53	10.04	587.18	587.21
℄ PIER 6 WB	53+60.65	10.04	587.15	587.17
℄ E BRG PIER 6 WB	53+61.78	10.04	587.12	587.14
3O	53+71.78	10.04	586.81	586.89
3P	53+81.78	10.04	586.50	586.63
3Q	53+91.78	10.04	586.20	586.37
3R	54+01.78	10.04	585.89	586.09
3S	54+11.78	10.04	585.58	585.81
3T	54+21.78	10.04	585.28	585.53
3U	54+31.78	10.04	584.97	585.23
3V	54+41.78	10.04	584.66	584.92
3W	54+51.78	10.04	584.36	584.60
3X	54+61.78	10.04	584.05	584.28
3Y	54+71.78	10.04	583.74	583.94
3Z	54+81.78	10.04	583.44	583.60
3AA	54+91.78	10.04	583.13	583.25
3AB	55+01.78	10.04	582.82	582.89
℄ W. BRG. PIER 7 WB	55+09.67	10.04	582.58	582.60
℄ PIER 7 WB	55+10.88	10.04	582.54	582.57

INSIDE FACE OF SOUTH PARAPET - WB

Location	Station	Offset	Theoretical Grade Elevations	Theoretical Grade Elevations Adjusted for Dead Load Deflection and Grinding
℄ PIER 5 WB	52+09.88	12.00	591.73	591.75
℄ E BRG. PIER 5 WB	52+11.63	12.00	591.68	591.70
3A	52+21.63	12.00	591.37	591.45
3B	52+31.63	12.00	591.07	591.20
3C	52+41.63	12.00	590.76	590.94
3D	52+51.63	12.00	590.45	590.66
3E	52+61.63	12.00	590.15	590.38
3F	52+71.63	12.00	589.84	590.09
3G	52+81.63	12.00	589.53	589.79
3H	52+91.63	12.00	589.23	589.48
3I	53+01.63	12.00	588.92	589.17
3J	53+11.63	12.00	588.61	588.84
3K	53+21.63	12.00	588.31	588.51
3L	53+31.63	12.00	588.00	588.16
3M	53+41.63	12.00	587.69	587.81
3N	53+51.63	12.00	587.39	587.45
℄ W BRG PIER 6 WB	53+59.53	12.00	587.15	587.17
℄ PIER 6 WB	53+60.65	12.00	587.11	587.13
℄ E BRG PIER 6 WB	53+61.78	12.00	587.08	587.10
3O	53+71.78	12.00	586.77	586.85
3P	53+81.78	12.00	586.46	586.59
3Q	53+91.78	12.00	586.16	586.33
3R	54+01.78	12.00	585.85	586.06
3S	54+11.78	12.00	585.54	585.77
3T	54+21.78	12.00	585.24	585.49
3U	54+31.78	12.00	584.93	585.19
3V	54+41.78	12.00	584.62	584.88
3W	54+51.78	12.00	584.32	584.57
3X	54+61.78	12.00	584.01	584.24
3Y	54+71.78	12.00	583.70	583.91
3Z	54+81.78	12.00	583.40	583.56
3AA	54+91.78	12.00	583.09	583.21
3AB	55+01.78	12.00	582.78	582.85
℄ W. BRG. PIER 7 WB	55+09.67	12.00	582.54	582.56
℄ PIER 7 WB	55+10.88	12.00	582.51	582.53

NOTES:

1. All Elevations and Offsets are in feet.
2. Offsets are measured with respect to the I-80 WB PGL. Negative offsets are left and positive are right of the PGL.

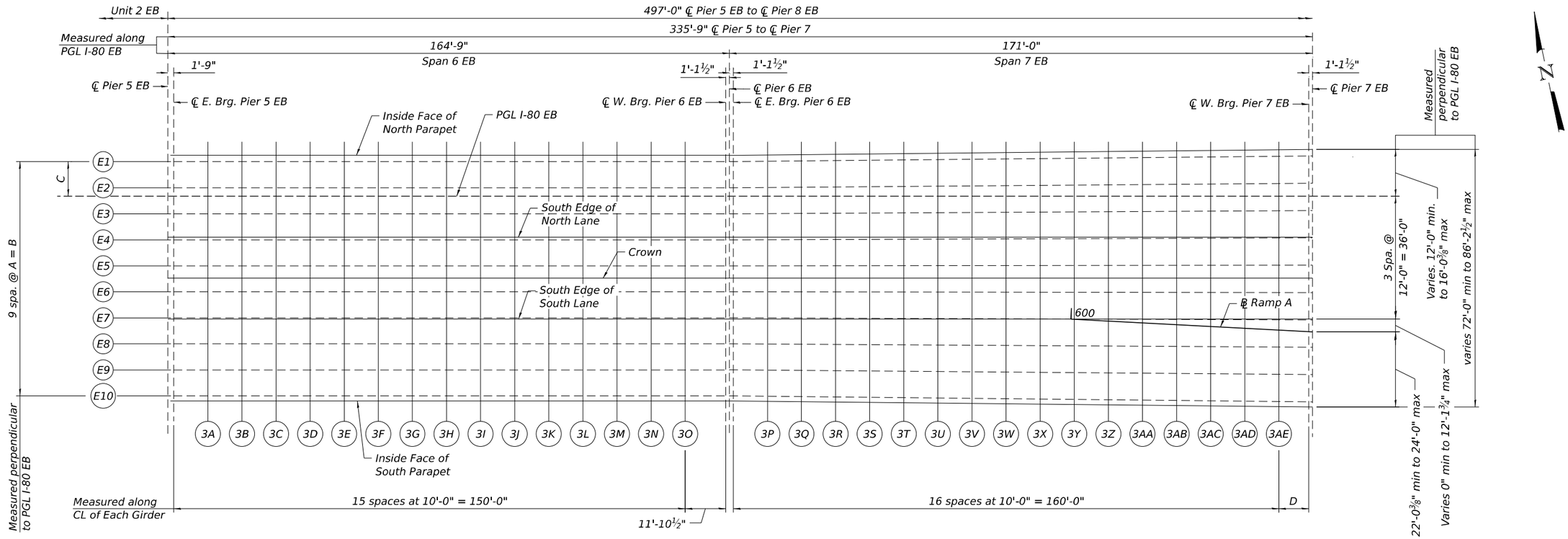

PARTIAL PLAN - UNIT 3 EB

TABLE OF BEAM SPACING

LOCATION	A	B	C
℄ E BRG. PIER 5 EB	7'-7 1/2"	68'-7 1/2"	10'-1 1/2"
℄ W BRG PIER 6 EB	7'-7 1/2"	68'-7 1/2"	10'-1 1/2"
℄ E BRG PIER 6 EB	7'-7 1/2" (+)	68'-7 3/4"	10'-1 5/8"
℄ W. BRG. PIER 7 EB	8'-0 1/8"(-)	72'-0 15/16"	11'-10 1/8"
℄ E. BRG. PIER 7 EB	8'-0 1/4"(-)	72'-2 1/16"	11'-10 7/16"
℄ W. BRG. PIER 8EB	9'-2 3/8"(-)	82'-9 1/16"	14'-1 1/2"

TOP OF SLAB DIMENSIONS TABLE - UNIT 3 EB

LOCATION	D	E
Face of North Parapet	8'-9 1/8"	8'- 11 3/16"
Beam E1	8'-9 1/8"	8'- 11 3/16"
Beam E2	8'-9 1/16"	8'- 11 1/16"
EB PGL	8'-9"	8'- 11"
Beam E3	8'-9 1/16"	8'- 11"
South Edge of North Lane	8'-9"	8'- 11"
Beam E4	8'-9"	8'- 11 1/16"
Beam E5	8'-9"	8'- 11 1/4"
Crown	8'-9"	8'- 11"
Beam E6	8'-9"	8'- 11 1/2"
Beam E7	8'-9"	8'- 11 7/8"
South Edge of South Lane	8'-9"	8'- 11"
BL Ramp A	13'-4 1/8"	9'-1 5/8"
Beam E8	8'-9 1/16"	9'- 0 3/8"
Beam E9	8'-9 1/16"	9'- 0 15/16"
Beam E10	8'-9 1/8"	9'- 1 5/8"
Face of South Parapet	8'-9 1/8"	9'- 1 5/8"

NOTES:

1. Up to ¼ inch to be ground off the bridge deck and bridge approach slabs. The Profile Grade shows the final grade after grinding.

WSP USA Inc.
30 N. LASALLE STREET
SUITE 4200
CHICAGO, IL 60602
TEL: (312) 782-8150
FAX: (312) 782-1684

USER NAME = USSJ696614	DESIGNED - LAS	REVISED -	
	CHECKED - PJL	REVISED -	
PLOT SCALE = 32:0.0000 ':" / in.	DRAWN - GM	REVISED -	
PLOT DATE = 11/5/2025	CHECKED - LAS	REVISED -	

STATE OF ILLINOIS
DEPARTMENT OF TRANSPORTATION

TOP OF SLAB ELEVATION PLAN 1 - UNIT 3 EB
STRUCTURE NUMBER 099-8309 WB AND 099-8325 EB

SHEET S-72 OF S-333 SHEETS

F.A.I RTE.	SECTION	COUNTY	TOTAL SHEETS	SHEET NO.
I-80	FAI 80 21 STRUCTURE 2	WILL	1230	653
		CONTRACT NO. 62R23		
		ILLINOIS	FED. AID PROJECT	

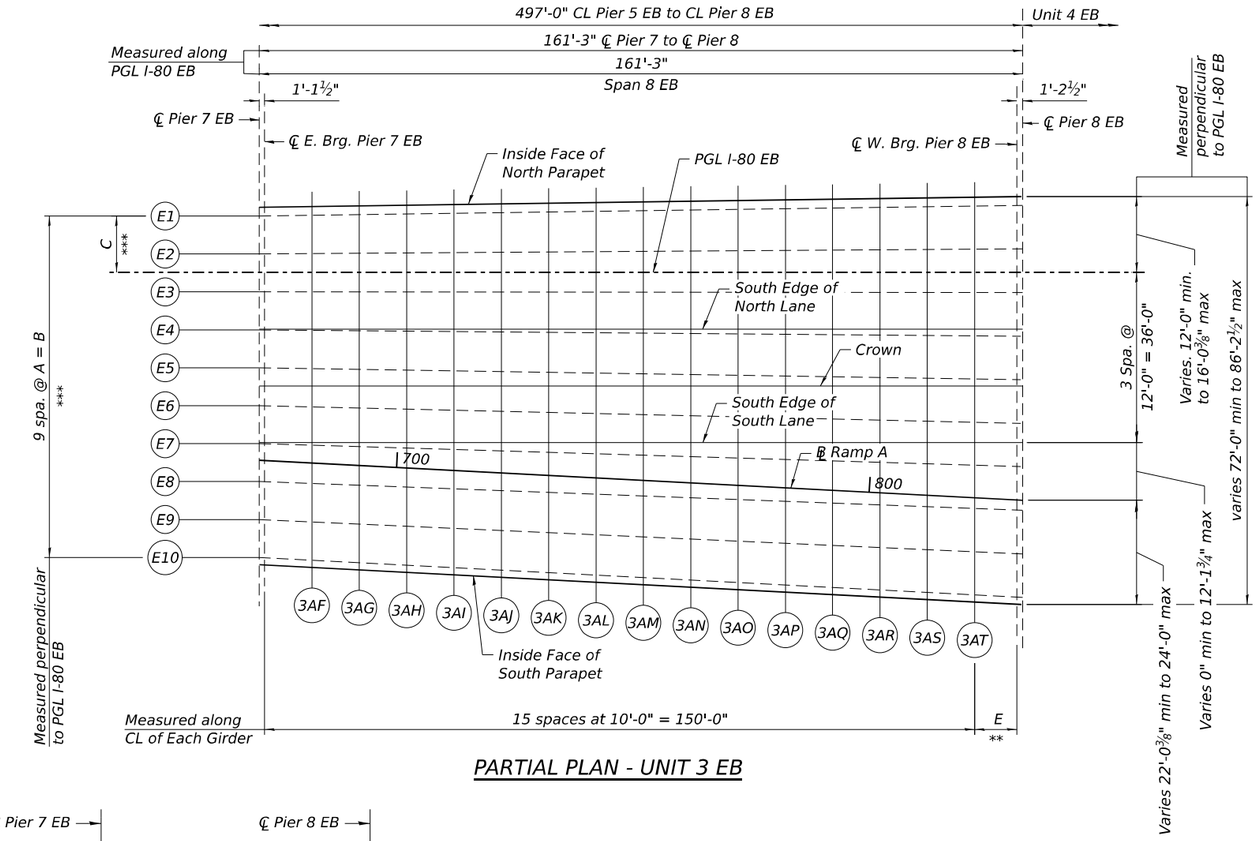

PARTIAL PLAN - UNIT 3 EB

** See Top of Slab Dimensions Table on sheet S-72

*** See Table of Girder Spacing on sheet S-72

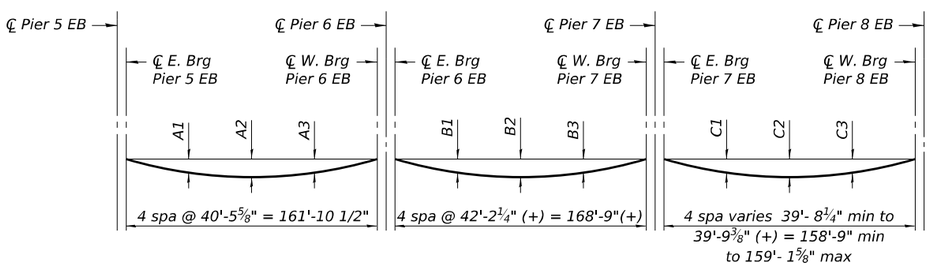

DEAD LOAD DEFLECTION DIAGRAM

(Includes weight of concrete, excluding beams)

Note:
The above deflections are not to be used in the field if the engineer is working from the grade elevations adjusted for dead load deflections and grinding as shown on sheets S-74 to S-79.

Beam	DEAD LOAD DEFLECTIONS (INCHES)								
	Span 6 (EB)			Span 7 (EB)			Span 8 (EB)		
	A1	A2	A3	B1	B2	B3	C1	C2	C3
E1	2	2 5/8	2	2 1/4	3	2 1/4	1 7/8	2 1/2	1 7/8
E2	2 1/8	2 3/4	2	2 3/8	3 1/8	2 3/8	1 7/8	2 5/8	2
E3	2 1/8	2 3/4	2	2 3/8	3 1/8	2 3/8	1 7/8	2 5/8	2
E4	2	2 5/8	2	2 3/8	3 1/8	2 3/8	1 7/8	2 1/2	1 7/8
E5	2	2 5/8	2	2 3/8	3 1/8	2 3/8	1 7/8	2 1/2	1 7/8
E6	2	2 5/8	2	2 3/8	3 1/8	2 3/8	1 7/8	2 1/2	1 7/8
E7	2	2 5/8	2	2 3/8	3 1/8	2 3/8	1 7/8	2 1/2	1 7/8
E8	2 1/8	2 7/8	2 1/8	2 3/8	3 1/4	2 3/8	2	2 3/4	2 1/8
E9	2 1/8	2 7/8	2 1/8	2 3/8	3 1/4	2 3/8	2	2 3/4	2 1/8
E10	2 1/2	3 1/4	2 3/8	2 5/8	3 5/8	2 5/8	2 1/4	3	2 1/4

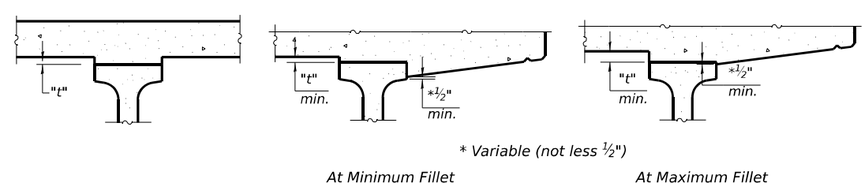

INTERIOR BEAMS

EXTERIOR BEAMS

FILLET HEIGHTS

To determine "t": After all precast prestressed beams have been erected, elevations of the top flanges of the beams shall be taken at intervals shown. These elevations subtracted from the "Theoretical Grade Elevations Adjusted for Dead Load Deflection and Grinding" shown on sheets S-74 to S-79, minus the initial slab thickness prior to grinding, equals the fillet heights "t" above top flange of beams.

The slab is to be ground after curing to achieve smoothness, but the slab is not to be ground to elevations below the "Theoretical Grade Elevations" shown on sheets S-74 to S-79. For grinding the deck, see Special Provisions.

NOTES:

1. Up to ¼ inch to be ground off the bridge deck and bridge approach slabs. The Profile Grade shows the final grade after grinding.

WSP USA Inc.
30 N. LASALLE STREET
SUITE 4200
CHICAGO, IL 60602
TEL: (312) 782-8150
FAX: (312) 782-1684

USER NAME = USSJ696614	DESIGNED - LAS	REVISED -	
	CHECKED - PJL	REVISED -	
PLOT SCALE = 32:0.0000 ':" / in.	DRAWN - GM	REVISED -	
PLOT DATE = 11/5/2025	CHECKED - LAS	REVISED -	

STATE OF ILLINOIS
DEPARTMENT OF TRANSPORTATION

TOP OF SLAB ELEVATION PLAN - UNIT 3 EB
STRUCTURE NUMBER 099-8309 WB AND 099-8325 EB

SHEET S-73 OF S-333 SHEETS

F.A.I RTE.	SECTION	COUNTY	TOTAL SHEETS	SHEET NO.
I-80	FAI 80 21 STRUCTURE 2	WILL	1230	654
		CONTRACT NO. 62R23		
	ILLINOIS	FED. AID PROJECT		

MODEL: Default
FILE NAME: pw://transystems-pw.bentley.com:transyscorp-pw1-hosted/Documents/Projects_2018/CH401/401180022/03-WSP/CAD/62R23-RB-1/Sheets/Structural/0998309-62R23-S245-DEE302.dgn

INSIDE FACE OF NORTH PARAPET - EB

Location	Station	Offset	Theoretical Grade Elevations	Theoretical Grade Elevations Adjusted for Dead Load Deflection and Grinding
℄ PIER 5 EB	51+85.12	-12.00	592.48	592.50
℄ E BRG. PIER 5 EB	51+86.87	-12.00	592.43	592.45
3A	51+96.87	-12.00	592.13	592.20
3B	52+06.87	-12.00	591.83	591.94
3C	52+16.87	-12.00	591.52	591.67
3D	52+26.87	-12.00	591.21	591.40
3E	52+36.87	-12.00	590.91	591.12
3F	52+46.87	-12.00	590.60	590.83
3G	52+56.87	-12.00	590.29	590.53
3H	52+66.87	-12.00	589.99	590.23
3I	52+76.87	-12.00	589.68	589.92
3J	52+86.87	-12.00	589.37	589.60
3K	52+96.87	-12.00	589.07	589.28
3L	53+06.87	-12.00	588.76	588.95
3M	53+16.87	-12.00	588.45	588.61
3N	53+26.87	-12.00	588.15	588.27
3O	53+36.87	-12.00	587.84	587.92
℄ W BRG PIER 6 EB	53+48.75	-12.00	587.48	587.50
℄ PIER 6 EB	53+49.87	-12.00	587.44	587.46
℄ E BRG PIER 6 EB	53+51.00	-12.01	587.41	587.43
3P	53+60.99	-12.11	587.10	587.17
3Q	53+70.99	-12.21	586.79	586.91
3R	53+80.99	-12.32	586.48	586.65
3S	53+90.99	-12.42	586.17	586.37
3T	54+00.99	-12.52	585.86	586.09
3U	54+10.99	-12.62	585.56	585.81
3V	54+20.99	-12.72	585.25	585.51
3W	54+30.99	-12.82	584.94	585.21
3X	54+40.99	-12.92	584.63	584.90
3Y	54+50.99	-13.02	584.32	584.59
3Z	54+60.99	-13.12	584.01	584.26
3AA	54+70.99	-13.23	583.70	583.93
3AB	54+80.99	-13.33	583.40	583.59
3AC	54+90.99	-13.43	583.09	583.25
3AD	55+00.99	-13.53	582.78	582.90
3AE	55+10.99	-13.63	582.47	582.54
℄ W. BRG. PIER 7 EB	55+19.75	-13.72	582.20	582.22
℄ PIER 7 EB	55+20.87	-13.73	582.16	582.19
℄ E. BRG. PIER 7 EB	55+22.00	-13.75	582.13	582.15
3AF	55+31.99	-13.89	581.82	581.89
3AG	55+41.99	-14.03	581.51	581.62
3AH	55+51.99	-14.17	581.20	581.35
3AI	55+61.99	-14.31	580.89	581.07
3AJ	55+71.99	-14.46	580.58	580.78
3AK	55+81.99	-14.60	580.27	580.49
3AL	55+91.99	-14.74	579.96	580.19
3AM	56+01.99	-14.88	579.66	579.89
3AN	56+11.99	-15.02	579.35	579.57
3AO	56+21.98	-15.17	579.04	579.25
3AP	56+31.98	-15.31	578.73	578.93
3AQ	56+41.98	-15.45	578.42	578.59
3AR	56+51.98	-15.59	578.11	578.25
3AS	56+61.98	-15.73	577.80	577.91
3AT	56+71.98	-15.87	577.47	577.53
℄ W. BRG. PIER 8EB	56+80.91	-16.00	577.17	577.19
℄ PIER 8 EB	56+82.12	-16.02	577.13	577.15

BEAM E1

Location	Station	Offset	Theoretical Grade Elevations	Theoretical Grade Elevations Adjusted for Dead Load Deflection and Grinding
℄ PIER 5 EB	51+85.12	-10.13	592.52	592.54
℄ E BRG. PIER 5 EB	51+86.87	-10.13	592.47	592.49
3A	51+96.87	-10.13	592.17	592.24
3B	52+06.87	-10.13	591.86	591.98
3C	52+16.87	-10.13	591.56	591.71
3D	52+26.87	-10.13	591.25	591.43
3E	52+36.87	-10.13	590.94	591.15
3F	52+46.87	-10.13	590.64	590.86
3G	52+56.87	-10.13	590.33	590.57
3H	52+66.87	-10.13	590.02	590.27
3I	52+76.87	-10.13	589.72	589.95
3J	52+86.87	-10.13	589.41	589.64
3K	52+96.87	-10.13	589.10	589.31
3L	53+06.87	-10.13	588.80	588.98
3M	53+16.87	-10.13	588.49	588.65
3N	53+26.87	-10.13	588.18	588.30
3O	53+36.87	-10.13	587.88	587.96
℄ W BRG PIER 6 EB	53+48.75	-10.13	587.51	587.53
℄ PIER 6 EB	53+49.87	-10.13	587.48	587.50
℄ E BRG PIER 6 EB	53+51.00	-10.14	587.44	587.47
3P	53+60.99	-10.24	587.14	587.21
3Q	53+70.99	-10.34	586.83	586.95
3R	53+80.99	-10.44	586.52	586.68
3S	53+90.99	-10.54	586.21	586.41
3T	54+00.99	-10.64	585.90	586.13
3U	54+10.99	-10.74	585.59	585.84
3V	54+20.99	-10.84	585.28	585.55
3W	54+30.99	-10.95	584.98	585.25
3X	54+40.99	-11.05	584.67	584.94
3Y	54+50.99	-11.15	584.36	584.62
3Z	54+60.99	-11.25	584.05	584.30
3AA	54+70.99	-11.35	583.74	583.97
3AB	54+80.99	-11.45	583.43	583.63
3AC	54+90.99	-11.55	583.12	583.28
3AD	55+00.99	-11.65	582.82	582.93
3AE	55+10.99	-11.76	582.51	582.57
℄ W. BRG. PIER 7 EB	55+19.75	-11.84	582.24	582.26
℄ PIER 7 EB	55+20.87	-11.86	582.20	582.22
℄ E. BRG. PIER 7 EB	55+22.00	-11.87	582.17	582.19
3AF	55+31.99	-12.01	581.86	581.93
3AG	55+41.99	-12.16	581.55	581.66
3AH	55+51.99	-12.30	581.24	581.39
3AI	55+61.99	-12.44	580.93	581.10
3AJ	55+71.99	-12.58	580.62	580.82
3AK	55+81.99	-12.72	580.31	580.53
3AL	55+91.99	-12.86	580.00	580.23
3AM	56+01.99	-13.01	579.69	579.92
3AN	56+11.99	-13.15	579.38	579.61
3AO	56+21.98	-13.29	579.07	579.29
3AP	56+31.98	-13.43	578.76	578.96
3AQ	56+41.98	-13.57	578.46	578.63
3AR	56+51.98	-13.72	578.15	578.29
3AS	56+61.98	-13.86	577.83	577.94
3AT	56+71.98	-14.00	577.51	577.57
℄ W. BRG. PIER 8EB	56+80.91	-14.13	577.21	577.24
℄ PIER 8 EB	56+82.12	-14.14	577.17	577.20

BEAM E2

Location	Station	Offset	Theoretical Grade Elevations	Theoretical Grade Elevations Adjusted for Dead Load Deflection and Grinding
℄ PIER 5 EB	51+85.12	-2.50	592.67	592.69
℄ E BRG. PIER 5 EB	51+86.87	-2.50	592.62	592.64
3A	51+96.87	-2.50	592.32	592.39
3B	52+06.87	-2.50	592.02	592.14
3C	52+16.87	-2.50	591.71	591.87
3D	52+26.87	-2.50	591.40	591.59
3E	52+36.87	-2.50	591.10	591.32
3F	52+46.87	-2.50	590.79	591.03
3G	52+56.87	-2.50	590.48	590.73
3H	52+66.87	-2.50	590.18	590.43
3I	52+76.87	-2.50	589.87	590.12
3J	52+86.87	-2.50	589.56	589.80
3K	52+96.87	-2.50	589.26	589.48
3L	53+06.87	-2.50	588.95	589.14
3M	53+16.87	-2.50	588.64	588.81
3N	53+26.87	-2.50	588.34	588.46
3O	53+36.87	-2.50	588.03	588.11
℄ W BRG PIER 6 EB	53+48.75	-2.50	587.67	587.69
℄ PIER 6 EB	53+49.87	-2.50	587.63	587.65
℄ E BRG PIER 6 EB	53+51.00	-2.50	587.60	587.62
3P	53+60.99	-2.58	587.29	587.36
3Q	53+70.99	-2.66	586.98	587.11
3R	53+80.99	-2.74	586.67	586.84
3S	53+90.99	-2.82	586.36	586.57
3T	54+00.99	-2.90	586.06	586.30
3U	54+10.99	-2.97	585.75	586.01
3V	54+20.99	-3.05	585.44	585.72
3W	54+30.99	-3.13	585.13	585.41
3X	54+40.99	-3.21	584.82	585.10
3Y	54+50.99	-3.29	584.52	584.79
3Z	54+60.99	-3.37	584.21	584.46
3AA	54+70.99	-3.45	583.90	584.13
3AB	54+80.99	-3.53	583.59	583.80
3AC	54+90.99	-3.61	583.28	583.45
3AD	55+00.99	-3.69	582.98	583.10
3AE	55+10.99	-3.77	582.67	582.74
℄ W. BRG. PIER 7 EB	55+19.75	-3.84	582.40	582.42
℄ PIER 7 EB	55+20.87	-3.84	582.36	582.38
℄ E. BRG. PIER 7 EB	55+22.00	-3.85	582.33	582.35
3AF	55+31.99	-3.92	582.02	582.09
3AG	55+41.99	-3.99	581.71	581.83
3AH	55+51.99	-4.06	581.40	581.56
3AI	55+61.99	-4.12	581.10	581.28
3AJ	55+71.99	-4.19	580.79	581.00
3AK	55+81.99	-4.26	580.48	580.71
3AL	55+91.99	-4.33	580.17	580.41
3AM	56+01.99	-4.40	579.86	580.11
3AN	56+11.99	-4.46	579.56	579.79
3AO	56+21.99	-4.53	579.25	579.47
3AP	56+31.99	-4.60	578.94	579.15
3AQ	56+41.99	-4.67	578.63	578.82
3AR	56+51.99	-4.74	578.33	578.48
3AS	56+61.99	-4.80	578.02	578.13
3AT	56+71.99	-4.87	577.70	577.77
℄ W. BRG. PIER 8EB	56+80.91	-4.93	577.42	577.44
℄ PIER 8 EB	56+82.12	-4.94	577.38	577.40

NOTES:

1. All Elevations and Offsets are in feet.
2. Offsets are measured with respect to the I-80 EB PGL. Negative offsets are left and positive are right of the PGL.

PGL I-80 EB

Location	Station	Offset	Theoretical Grade Elevations	Theoretical Grade Elevations Adjusted for Dead Load Deflection and Grinding
℄ PIER 5 EB	51+85.12	0.00	592.72	592.74
℄ E BRG. PIER 5 EB	51+86.87	0.00	592.67	592.69
3A	51+96.87	0.00	592.37	592.44
3B	52+06.87	0.00	592.07	592.19
3C	52+16.87	0.00	591.76	591.92
3D	52+26.87	0.00	591.45	591.64
3E	52+36.87	0.00	591.15	591.37
3F	52+46.87	0.00	590.84	591.08
3G	52+56.87	0.00	590.53	590.78
3H	52+66.87	0.00	590.23	590.48
3I	52+76.87	0.00	589.92	590.17
3J	52+86.87	0.00	589.61	589.85
3K	52+96.87	0.00	589.31	589.53
3L	53+06.87	0.00	589.00	589.19
3M	53+16.87	0.00	588.69	588.86
3N	53+26.87	0.00	588.39	588.51
3O	53+36.87	0.00	588.08	588.16
℄ W BRG PIER 6 EB	53+48.75	0.00	587.72	587.74
℄ PIER 6 EB	53+49.87	0.00	587.68	587.70
℄ E BRG PIER 6 EB	53+51.00	0.00	587.65	587.67
3P	53+61.00	0.00	587.34	587.42
3Q	53+71.00	0.00	587.03	587.16
3R	53+81.00	0.00	586.73	586.90
3S	53+91.00	0.00	586.42	586.63
3T	54+01.00	0.00	586.11	586.35
3U	54+11.00	0.00	585.81	586.07
3V	54+21.00	0.00	585.50	585.78
3W	54+31.00	0.00	585.19	585.48
3X	54+41.00	0.00	584.89	585.17
3Y	54+51.00	0.00	584.58	584.86
3Z	54+61.00	0.00	584.28	584.53
3AA	54+71.00	0.00	583.97	584.20
3AB	54+81.00	0.00	583.66	583.87
3AC	54+91.00	0.00	583.36	583.52
3AD	55+01.00	0.00	583.05	583.17
3AE	55+11.00	0.00	582.74	582.81
℄ W. BRG. PIER 7 EB	55+19.75	0.00	582.47	582.49
℄ PIER 7 EB	55+20.87	0.00	582.44	582.46
℄ E. BRG. PIER 7 EB	55+22.00	0.00	582.41	582.43
3AF	55+32.00	0.00	582.10	582.17
3AG	55+42.00	0.00	581.79	581.91
3AH	55+52.00	0.00	581.49	581.64
3AI	55+62.00	0.00	581.18	581.36
3AJ	55+72.00	0.00	580.87	581.08
3AK	55+82.00	0.00	580.57	580.79
3AL	55+92.00	0.00	580.26	580.49
3AM	56+02.00	0.00	579.95	580.19
3AN	56+12.00	0.00	579.65	579.88
3AO	56+22.00	0.00	579.34	579.56
3AP	56+32.00	0.00	579.03	579.24
3AQ	56+42.00	0.00	578.73	578.91
3AR	56+52.00	0.00	578.42	578.57
3AS	56+62.00	0.00	578.11	578.23
3AT	56+72.00	0.00	577.81	577.87
℄ W. BRG. PIER 8EB	56+80.91	0.00	577.53	577.55
℄ PIER 8 EB	56+82.12	0.00	577.50	577.52

BEAM E3

Location	Station	Offset	Theoretical Grade Elevations	Theoretical Grade Elevations Adjusted for Dead Load Deflection and Grinding
℄ PIER 5 EB	51+85.12	5.13	592.83	592.85
℄ E BRG. PIER 5 EB	51+86.87	5.13	592.77	592.79
3A	51+96.87	5.13	592.47	592.55
3B	52+06.87	5.13	592.17	592.29
3C	52+16.87	5.13	591.86	592.02
3D	52+26.87	5.13	591.55	591.75
3E	52+36.87	5.13	591.25	591.47
3F	52+46.87	5.13	590.94	591.18
3G	52+56.87	5.13	590.64	590.88
3H	52+66.87	5.13	590.33	590.58
3I	52+76.87	5.13	590.02	590.27
3J	52+86.87	5.13	589.72	589.95
3K	52+96.87	5.13	589.41	589.63
3L	53+06.87	5.13	589.10	589.30
3M	53+16.87	5.13	588.80	588.96
3N	53+26.87	5.13	588.49	588.61
3O	53+36.87	5.13	588.18	588.26
℄ W BRG PIER 6 EB	53+48.75	5.13	587.82	587.84
℄ PIER 6 EB	53+49.87	5.13	587.78	587.81
℄ E BRG PIER 6 EB	53+51.00	5.13	587.75	587.77
3P	53+60.99	5.07	587.44	587.52
3Q	53+70.99	5.01	587.13	587.26
3R	53+80.99	4.96	586.83	587.00
3S	53+90.99	4.90	586.52	586.73
3T	54+00.99	4.84	586.21	586.45
3U	54+10.99	4.79	585.90	586.16
3V	54+20.99	4.73	585.60	585.87
3W	54+30.99	4.67	585.29	585.57
3X	54+40.99	4.62	584.98	585.26
3Y	54+50.99	4.56	584.67	584.95
3Z	54+60.99	4.50	584.37	584.62
3AA	54+70.99	4.45	584.06	584.29
3AB	54+80.99	4.39	583.75	583.95
3AC	54+90.99	4.34	583.44	583.61
3AD	55+00.99	4.28	583.13	583.26
3AE	55+10.99	4.22	582.83	582.90
℄ W. BRG. PIER 7 EB	55+19.75	4.17	582.56	582.58
℄ PIER 7 EB	55+20.87	4.17	582.52	582.54
℄ E. BRG. PIER 7 EB	55+22.00	4.17	582.49	582.51
3AF	55+31.99	4.17	582.18	582.25
3AG	55+41.99	4.18	581.88	581.99
3AH	55+51.99	4.19	581.57	581.72
3AI	55+61.99	4.19	581.26	581.45
3AJ	55+71.99	4.20	580.96	581.16
3AK	55+81.99	4.20	580.65	580.88
3AL	55+91.99	4.21	580.34	580.58
3AM	56+01.99	4.22	580.04	580.28
3AN	56+11.99	4.22	579.73	579.97
3AO	56+21.99	4.23	579.42	579.65
3AP	56+31.99	4.23	579.12	579.33
3AQ	56+41.99	4.24	578.81	578.99
3AR	56+51.99	4.25	578.50	578.66
3AS	56+61.99	4.25	578.20	578.31
3AT	56+71.99	4.26	577.90	577.96
℄ W. BRG. PIER 8EB	56+80.91	4.26	577.63	577.65
℄ PIER 8 EB	56+82.12	4.26	577.59	577.61

SOUTH EDGE OF NORTH LANE - EB

Location	Station	Offset	Theoretical Grade Elevations	Theoretical Grade Elevations Adjusted for Dead Load Deflection and Grinding
℄ PIER 5 EB	51+85.12	12.00	592.96	592.98
℄ E BRG. PIER 5 EB	51+86.87	12.00	592.91	592.93
3A	51+96.87	12.00	592.61	592.68
3B	52+06.87	12.00	592.31	592.42
3C	52+16.87	12.00	592.00	592.15
3D	52+26.87	12.00	591.69	591.87
3E	52+36.87	12.00	591.39	591.59
3F	52+46.87	12.00	591.08	591.30
3G	52+56.87	12.00	590.77	591.01
3H	52+66.87	12.00	590.47	590.71
3I	52+76.87	12.00	590.16	590.39
3J	52+86.87	12.00	589.85	590.08
3K	52+96.87	12.00	589.55	589.76
3L	53+06.87	12.00	589.24	589.43
3M	53+16.87	12.00	588.93	589.09
3N	53+26.87	12.00	588.63	588.75
3O	53+36.87	12.00	588.32	588.40
℄ W BRG PIER 6 EB	53+48.75	12.00	587.96	587.98
℄ PIER 6 EB	53+49.87	12.00	587.92	587.94
℄ E BRG PIER 6 EB	53+51.00	12.00	587.89	587.91
3P	53+61.00	12.00	587.58	587.66
3Q	53+71.00	12.00	587.27	587.40
3R	53+81.00	12.00	586.97	587.14
3S	53+91.00	12.00	586.66	586.87
3T	54+01.00	12.00	586.35	586.59
3U	54+11.00	12.00	586.05	586.30
3V	54+21.00	12.00	585.74	586.01
3W	54+31.00	12.00	585.43	585.71
3X	54+41.00	12.00	585.13	585.41
3Y	54+51.00	12.00	584.82	585.09
3Z	54+61.00	12.00	584.52	584.77
3AA	54+71.00	12.00	584.21	584.44
3AB	54+81.00	12.00	583.90	584.10
3AC	54+91.00	12.00	583.60	583.76
3AD	55+01.00	12.00	583.29	583.41
3AE	55+11.00	12.00	582.98	583.05
℄ W. BRG. PIER 7 EB	55+19.75	12.00	582.71	582.73
℄ PIER 7 EB	55+20.87	12.00	582.68	582.70
℄ E. BRG. PIER 7 EB	55+22.00	12.00	582.65	582.67
3AF	55+32.00	12.00	582.34	582.41
3AG	55+42.00	12.00	582.03	582.14
3AH	55+52.00	12.00	581.73	581.87
3AI	55+62.00	12.00	581.42	581.59
3AJ	55+72.00	12.00	581.11	581.31
3AK	55+82.00	12.00	580.81	581.02
3AL	55+92.00	12.00	580.50	580.72
3AM	56+02.00	12.00	580.19	580.42
3AN	56+12.00	12.00	579.89	580.11
3AO	56+22.00	12.00	579.58	579.79
3AP	56+32.00	12.00	579.27	579.47
3AQ	56+42.00	12.00	578.97	579.14
3AR	56+52.00	12.00	578.66	578.80
3AS	56+62.00	12.00	578.35	578.46
3AT	56+72.00	12.00	578.06	578.13
℄ W. BRG. PIER 8EB	56+80.91	12.00	577.80	577.83
℄ PIER 8 EB	56+82.12	12.00	577.77	577.79

NOTES:

1. All Elevations and Offsets are in feet.
2. Offsets are measured with respect to the I-80 EB PGL. Negative offsets are left and positive are right of the PGL.

BEAM E4

Location	Station	Offset	Theoretical Grade Elevations	Theoretical Grade Elevations Adjusted for Dead Load Deflection and Grinding
℄ PIER 5 EB	51+85.12	12.75	592.97	592.99
℄ E BRG. PIER 5 EB	51+86.87	12.75	592.92	592.94
3A	51+96.87	12.75	592.62	592.69
3B	52+06.87	12.75	592.32	592.43
3C	52+16.87	12.75	592.01	592.16
3D	52+26.87	12.75	591.70	591.89
3E	52+36.87	12.75	591.40	591.60
3F	52+46.87	12.75	591.09	591.31
3G	52+56.87	12.75	590.78	591.02
3H	52+66.87	12.75	590.48	590.72
3I	52+76.87	12.75	590.17	590.41
3J	52+86.87	12.75	589.86	590.09
3K	52+96.87	12.75	589.56	589.77
3L	53+06.87	12.75	589.25	589.44
3M	53+16.87	12.75	588.94	589.10
3N	53+26.87	12.75	588.64	588.76
3O	53+36.87	12.75	588.33	588.41
℄ W BRG PIER 6 EB	53+48.75	12.75	587.97	587.99
℄ PIER 6 EB	53+49.87	12.75	587.93	587.95
℄ E BRG PIER 6 EB	53+51.00	12.75	587.90	587.92
3P	53+60.99	12.72	587.59	587.67
3Q	53+70.99	12.68	587.28	587.41
3R	53+80.99	12.65	586.98	587.15
3S	53+90.99	12.62	586.67	586.88
3T	54+00.99	12.58	586.36	586.60
3U	54+10.99	12.55	586.06	586.31
3V	54+20.99	12.51	585.75	586.02
3W	54+30.99	12.48	585.44	585.72
3X	54+40.99	12.45	585.13	585.41
3Y	54+50.99	12.41	584.83	585.10
3Z	54+60.99	12.38	584.52	584.78
3AA	54+70.99	12.35	584.21	584.45
3AB	54+80.99	12.31	583.91	584.11
3AC	54+90.99	12.28	583.60	583.77
3AD	55+00.99	12.25	583.29	583.42
3AE	55+10.99	12.21	582.99	583.05
℄ W. BRG. PIER 7 EB	55+19.75	12.18	582.72	582.74
℄ PIER 7 EB	55+20.87	12.18	582.68	582.70
℄ E. BRG. PIER 7 EB	55+22.00	12.19	582.65	582.67
3AF	55+31.99	12.27	582.34	582.41
3AG	55+41.99	12.35	582.04	582.15
3AH	55+51.99	12.43	581.73	581.88
3AI	55+61.99	12.51	581.43	581.60
3AJ	55+71.99	12.59	581.12	581.32
3AK	55+81.99	12.67	580.82	581.03
3AL	55+91.99	12.75	580.51	580.73
3AM	56+01.99	12.83	580.21	580.43
3AN	56+11.99	12.91	579.90	580.12
3AO	56+21.99	12.99	579.59	579.81
3AP	56+31.99	13.07	579.29	579.49
3AQ	56+41.99	13.15	578.99	579.16
3AR	56+51.99	13.23	578.68	578.83
3AS	56+61.99	13.31	578.38	578.49
3AT	56+71.99	13.39	578.09	578.16
℄ W. BRG. PIER 8EB	56+80.91	13.46	577.84	577.86
℄ PIER 8 EB	56+82.12	13.47	577.80	577.82

BEAM E5

Location	Station	Offset	Theoretical Grade Elevations	Theoretical Grade Elevations Adjusted for Dead Load Deflection and Grinding
℄ PIER 5 EB	51+85.12	20.38	593.09	593.11
℄ E BRG. PIER 5 EB	51+86.87	20.38	593.04	593.06
3A	51+96.87	20.38	592.74	592.81
3B	52+06.87	20.38	592.43	592.55
3C	52+16.87	20.38	592.12	592.28
3D	52+26.87	20.38	591.82	592.00
3E	52+36.87	20.38	591.51	591.72
3F	52+46.87	20.38	591.20	591.43
3G	52+56.87	20.38	590.90	591.13
3H	52+66.87	20.38	590.59	590.83
3I	52+76.87	20.38	590.29	590.52
3J	52+86.87	20.38	589.98	590.20
3K	52+96.87	20.38	589.67	589.88
3L	53+06.87	20.38	589.37	589.55
3M	53+16.87	20.38	589.06	589.22
3N	53+26.87	20.38	588.75	588.87
3O	53+36.87	20.38	588.45	588.52
℄ W BRG PIER 6 EB	53+48.75	20.38	588.08	588.10
℄ PIER 6 EB	53+49.87	20.38	588.05	588.07
℄ E BRG PIER 6 EB	53+51.00	20.38	588.01	588.03
3P	53+60.99	20.36	587.71	587.78
3Q	53+70.99	20.35	587.40	587.53
3R	53+80.99	20.34	587.09	587.26
3S	53+90.99	20.33	586.79	586.99
3T	54+00.99	20.32	586.48	586.72
3U	54+10.99	20.31	586.17	586.43
3V	54+20.99	20.30	585.87	586.14
3W	54+30.99	20.29	585.56	585.84
3X	54+40.99	20.28	585.25	585.53
3Y	54+50.99	20.27	584.95	585.22
3Z	54+60.99	20.26	584.64	584.89
3AA	54+70.99	20.24	584.33	584.57
3AB	54+80.99	20.23	584.03	584.23
3AC	54+90.99	20.22	583.72	583.88
3AD	55+00.99	20.21	583.41	583.53
3AE	55+10.99	20.20	583.11	583.17
℄ W. BRG. PIER 7 EB	55+19.75	20.19	582.84	582.86
℄ PIER 7 EB	55+20.87	20.19	582.80	582.82
℄ E. BRG. PIER 7 EB	55+22.00	20.21	582.77	582.79
3AF	55+31.99	20.36	582.46	582.53
3AG	55+41.99	20.51	582.16	582.27
3AH	55+51.99	20.67	581.86	582.00
3AI	55+61.99	20.82	581.55	581.73
3AJ	55+71.99	20.98	581.25	581.45
3AK	55+81.99	21.13	580.94	581.16
3AL	55+91.99	21.28	580.64	580.86
3AM	56+01.99	21.44	580.33	580.56
3AN	56+11.98	21.59	580.03	580.25
3AO	56+21.98	21.75	579.73	579.94
3AP	56+31.98	21.90	579.42	579.62
3AQ	56+41.98	22.05	579.13	579.30
3AR	56+51.98	22.21	578.83	578.98
3AS	56+61.98	22.36	578.56	578.67
3AT	56+71.98	22.52	578.29	578.35
℄ W. BRG. PIER 8EB	56+80.91	22.65	578.04	578.07
℄ PIER 8 EB	56+82.12	22.67	578.01	578.03

CROWN - EB

Location	Station	Offset	Theoretical Grade Elevations	Theoretical Grade Elevations Adjusted for Dead Load Deflection and Grinding
℄ PIER 5 EB	51+85.12	24.00	593.14	593.16
℄ E BRG. PIER 5 EB	51+86.87	24.00	593.09	593.11
3A	51+96.87	24.00	592.79	592.86
3B	52+06.87	24.00	592.49	592.60
3C	52+16.87	24.00	592.18	592.33
3D	52+26.87	24.00	591.87	592.05
3E	52+36.87	24.00	591.57	591.77
3F	52+46.87	24.00	591.26	591.48
3G	52+56.87	24.00	590.95	591.19
3H	52+66.87	24.00	590.65	590.89
3I	52+76.87	24.00	590.34	590.57
3J	52+86.87	24.00	590.03	590.26
3K	52+96.87	24.00	589.73	589.94
3L	53+06.87	24.00	589.42	589.61
3M	53+16.87	24.00	589.11	589.27
3N	53+26.87	24.00	588.81	588.93
3O	53+36.87	24.00	588.50	588.58
℄ W BRG PIER 6 EB	53+48.75	24.00	588.14	588.16
℄ PIER 6 EB	53+49.87	24.00	588.10	588.12
℄ E BRG PIER 6 EB	53+51.00	24.00	588.07	588.09
3P	53+61.00	24.00	587.76	587.84
3Q	53+71.00	24.00	587.45	587.58
3R	53+81.00	24.00	587.15	587.32
3S	53+91.00	24.00	586.84	587.05
3T	54+01.00	24.00	586.53	586.77
3U	54+11.00	24.00	586.23	586.48
3V	54+21.00	24.00	585.92	586.19
3W	54+31.00	24.00	585.61	585.89
3X	54+41.00	24.00	585.31	585.59
3Y	54+51.00	24.00	585.00	585.27
3Z	54+61.00	24.00	584.70	584.95
3AA	54+71.00	24.00	584.39	584.62
3AB	54+81.00	24.00	584.08	584.28
3AC	54+91.00	24.00	583.78	583.94
3AD	55+01.00	24.00	583.47	583.59
3AE	55+11.00	24.00	583.16	583.23
℄ W. BRG. PIER 7 EB	55+19.75	24.00	582.89	582.91
℄ PIER 7 EB	55+20.87	24.00	582.86	582.88
℄ E. BRG. PIER 7 EB	55+22.00	24.00	582.83	582.85
3AF	55+32.00	24.00	582.52	582.59
3AG	55+42.00	24.00	582.21	582.32
3AH	55+52.00	24.00	581.91	582.05
3AI	55+62.00	24.00	581.60	581.77
3AJ	55+72.00	24.00	581.29	581.49
3AK	55+82.00	24.00	580.99	581.20
3AL	55+92.00	24.00	580.68	580.90
3AM	56+02.00	24.00	580.37	580.60
3AN	56+12.00	24.00	580.07	580.29
3AO	56+22.00	24.00	579.76	579.97
3AP	56+32.00	24.00	579.45	579.65
3AQ	56+42.00	24.00	579.16	579.34
3AR	56+52.00	24.00	578.88	579.02
3AS	56+62.00	24.00	578.60	578.70
3AT	56+72.00	24.00	578.32	578.38
℄ W. BRG. PIER 8EB	56+80.91	24.00	578.08	578.10
℄ PIER 8 EB	56+82.12	24.00	578.04	578.06

NOTES:

1. All Elevations and Offsets are in feet.
2. Offsets are measured with respect to the I-80 EB PGL. Negative offsets are left and positive are right of the PGL.

BEAM E6

Location	Station	Offset	Theoretical Grade Elevations	Theoretical Grade Elevations Adjusted for Dead Load Deflection and Grinding
℄ PIER 5 EB	51+85.12	28.00	593.08	593.10
℄ E BRG. PIER 5 EB	51+86.87	28.00	593.03	593.05
3A	51+96.87	28.00	592.73	592.80
3B	52+06.87	28.00	592.43	592.54
3C	52+16.87	28.00	592.12	592.27
3D	52+26.87	28.00	591.81	591.99
3E	52+36.87	28.00	591.51	591.71
3F	52+46.87	28.00	591.20	591.42
3G	52+56.87	28.00	590.89	591.13
3H	52+66.87	28.00	590.59	590.83
3I	52+76.87	28.00	590.28	590.51
3J	52+86.87	28.00	589.97	590.20
3K	52+96.87	28.00	589.67	589.88
3L	53+06.87	28.00	589.36	589.55
3M	53+16.87	28.00	589.05	589.21
3N	53+26.87	28.00	588.75	588.87
3O	53+36.87	28.00	588.44	588.52
℄ W BRG PIER 6 EB	53+48.75	28.00	588.08	588.10
℄ PIER 6 EB	53+49.87	28.00	588.04	588.06
℄ E BRG PIER 6 EB	53+51.00	28.00	588.01	588.03
3P	53+60.99	28.01	587.70	587.78
3Q	53+70.99	28.02	587.39	587.52
3R	53+80.99	28.04	587.09	587.26
3S	53+90.99	28.05	586.78	586.99
3T	54+00.99	28.06	586.47	586.71
3U	54+10.99	28.07	586.17	586.42
3V	54+20.99	28.08	585.86	586.13
3W	54+30.99	28.09	585.55	585.83
3X	54+40.99	28.11	585.25	585.52
3Y	54+50.99	28.12	584.94	585.21
3Z	54+60.99	28.13	584.63	584.89
3AA	54+70.99	28.14	584.33	584.56
3AB	54+80.99	28.15	584.02	584.22
3AC	54+90.99	28.17	583.71	583.88
3AD	55+00.99	28.18	583.41	583.53
3AE	55+10.99	28.19	583.10	583.17
℄ W. BRG. PIER 7 EB	55+19.75	28.20	582.83	582.85
℄ PIER 7 EB	55+20.87	28.20	582.80	582.82
℄ E. BRG. PIER 7 EB	55+22.00	28.22	582.76	582.78
3AF	55+31.99	28.45	582.45	582.52
3AG	55+41.99	28.68	582.14	582.25
3AH	55+51.99	28.91	581.83	581.98
3AI	55+61.98	29.14	581.53	581.71
3AJ	55+71.98	29.36	581.24	581.44
3AK	55+81.98	29.59	580.96	581.17
3AL	55+91.98	29.82	580.67	580.89
3AM	56+01.97	30.05	580.39	580.62
3AN	56+11.97	30.28	580.11	580.33
3AO	56+21.97	30.50	579.83	580.04
3AP	56+31.97	30.73	579.55	579.74
3AQ	56+41.96	30.96	579.28	579.45
3AR	56+51.96	31.19	579.01	579.15
3AS	56+61.96	31.42	578.75	578.85
3AT	56+71.96	31.64	578.49	578.55
℄ W. BRG. PIER 8EB	56+80.91	31.85	578.25	578.27
℄ PIER 8 EB	56+82.12	31.88	578.22	578.24

BEAM E7

Location	Station	Offset	Theoretical Grade Elevations	Theoretical Grade Elevations Adjusted for Dead Load Deflection and Grinding
℄ PIER 5 EB	51+85.12	35.63	592.97	592.99
℄ E BRG. PIER 5 EB	51+86.87	35.63	592.92	592.94
3A	51+96.87	35.63	592.62	592.69
3B	52+06.87	35.63	592.31	592.43
3C	52+16.87	35.63	592.00	592.16
3D	52+26.87	35.63	591.70	591.88
3E	52+36.87	35.63	591.39	591.60
3F	52+46.87	35.63	591.08	591.31
3G	52+56.87	35.63	590.78	591.01
3H	52+66.87	35.63	590.47	590.71
3I	52+76.87	35.63	590.17	590.40
3J	52+86.87	35.63	589.86	590.08
3K	52+96.87	35.63	589.55	589.76
3L	53+06.87	35.63	589.25	589.43
3M	53+16.87	35.63	588.94	589.10
3N	53+26.87	35.63	588.63	588.75
3O	53+36.87	35.63	588.33	588.40
℄ W BRG PIER 6 EB	53+48.75	35.63	587.96	587.98
℄ PIER 6 EB	53+49.87	35.63	587.93	587.95
℄ E BRG PIER 6 EB	53+51.00	35.63	587.89	587.91
3P	53+60.99	35.66	587.59	587.66
3Q	53+70.99	35.69	587.28	587.41
3R	53+80.99	35.73	586.97	587.14
3S	53+90.99	35.76	586.66	586.87
3T	54+00.99	35.80	586.36	586.60
3U	54+10.99	35.83	586.05	586.31
3V	54+20.99	35.87	585.74	586.02
3W	54+30.99	35.90	585.44	585.71
3X	54+40.99	35.94	585.13	585.41
3Y	54+50.99	35.97	584.82	585.09
3Z	54+60.99	36.01	584.51	584.77
3AA	54+70.99	36.04	584.21	584.44
3AB	54+80.99	36.07	583.90	584.10
3AC	54+90.99	36.11	583.59	583.76
3AD	55+00.99	36.14	583.29	583.41
3AE	55+10.99	36.18	582.98	583.05
℄ W. BRG. PIER 7 EB	55+19.75	36.21	582.71	582.73
℄ PIER 7 EB	55+20.87	36.21	582.68	582.70
℄ E. BRG. PIER 7 EB	55+22.00	36.24	582.64	582.66
3AF	55+31.99	36.55	582.33	582.40
3AG	55+41.99	36.85	582.02	582.13
3AH	55+51.98	37.15	581.70	581.85
3AI	55+61.98	37.45	581.41	581.59
3AJ	55+71.97	37.75	581.15	581.35
3AK	55+81.97	38.06	580.88	581.10
3AL	55+91.96	38.36	580.61	580.84
3AM	56+01.96	38.66	580.35	580.58
3AN	56+11.95	38.96	580.08	580.31
3AO	56+21.95	39.26	579.82	580.03
3AP	56+31.94	39.57	579.55	579.75
3AQ	56+41.94	39.87	579.28	579.46
3AR	56+51.94	40.17	579.02	579.16
3AS	56+61.93	40.47	578.75	578.86
3AT	56+71.93	40.77	578.48	578.55
℄ W. BRG. PIER 8EB	56+80.91	41.04	578.24	578.26
℄ PIER 8 EB	56+82.12	41.08	578.21	578.23

SOUTH EDGE OF SOUTH LANE - EB

Location	Station	Offset	Theoretical Grade Elevations	Theoretical Grade Elevations Adjusted for Dead Load Deflection and Grinding
℄ PIER 5 EB	51+85.12	36.00	592.96	592.98
℄ E BRG. PIER 5 EB	51+86.87	36.00	592.91	592.93
3A	51+96.87	36.00	592.61	592.68
3B	52+06.87	36.00	592.31	592.42
3C	52+16.87	36.00	592.00	592.15
3D	52+26.87	36.00	591.69	591.87
3E	52+36.87	36.00	591.39	591.59
3F	52+46.87	36.00	591.08	591.30
3G	52+56.87	36.00	590.77	591.01
3H	52+66.87	36.00	590.47	590.71
3I	52+76.87	36.00	590.16	590.39
3J	52+86.87	36.00	589.85	590.08
3K	52+96.87	36.00	589.55	589.76
3L	53+06.87	36.00	589.24	589.43
3M	53+16.87	36.00	588.93	589.09
3N	53+26.87	36.00	588.63	588.75
3O	53+36.87	36.00	588.32	588.40
℄ W BRG PIER 6 EB	53+48.75	36.00	587.96	587.98
℄ PIER 6 EB	53+49.87	36.00	587.92	587.94
℄ E BRG PIER 6 EB	53+51.00	36.00	587.89	587.91
3P	53+61.00	36.00	587.58	587.66
3Q	53+71.00	36.00	587.27	587.40
3R	53+81.00	36.00	586.97	587.14
3S	53+91.00	36.00	586.66	586.87
3T	54+01.00	36.00	586.35	586.59
3U	54+11.00	36.00	586.05	586.30
3V	54+21.00	36.00	585.74	586.01
3W	54+31.00	36.00	585.43	585.71
3X	54+41.00	36.00	585.13	585.41
3Y	54+51.00	36.00	584.82	585.09
3Z	54+61.00	36.00	584.52	584.77
3AA	54+71.00	36.00	584.21	584.44
3AB	54+81.00	36.00	583.90	584.10
3AC	54+91.00	36.00	583.60	583.76
3AD	55+01.00	36.00	583.29	583.41
3AE	55+11.00	36.00	582.98	583.05
℄ W. BRG. PIER 7 EB	55+19.75	36.00	582.71	582.73
℄ PIER 7 EB	55+20.87	36.00	582.68	582.70
℄ E. BRG. PIER 7 EB	55+22.00	36.00	582.65	582.67
3AF	55+32.00	36.00	582.34	582.41
3AG	55+42.00	36.00	582.03	582.14
3AH	55+52.00	36.00	581.73	581.87
3AI	55+62.00	36.00	581.44	581.62
3AJ	55+72.00	36.00	581.18	581.38
3AK	55+82.00	36.00	580.92	581.14
3AL	55+92.00	36.00	580.66	580.88
3AM	56+02.00	36.00	580.40	580.63
3AN	56+12.00	36.00	580.14	580.36
3AO	56+22.00	36.00	579.88	580.09
3AP	56+32.00	36.00	579.62	579.82
3AQ	56+42.00	36.00	579.36	579.53
3AR	56+52.00	36.00	579.10	579.24
3AS	56+62.00	36.00	578.84	578.94
3AT	56+72.00	36.00	578.58	578.64
℄ W. BRG. PIER 8EB	56+80.91	36.00	578.35	578.37
℄ PIER 8 EB	56+82.12	36.00	578.31	578.34

NOTES:

1. All Elevations and Offsets are in feet.
2. Offsets are measured with respect to the I-80 EB PGL. Negative offsets are left and positive are right of the PGL.

℄ RAMP A

Location	Station	Offset	Theoretical Grade Elevations	Theoretical Grade Elevations Adjusted for Dead Load Deflection and Grinding
℄ PIER 5 EB	-	-	-	-
℄ E BRG. PIER 5 EB	-	-	-	-
3A	-	-	-	-
3B	-	-	-	-
3C	-	-	-	-
3D	-	-	-	-
3E	-	-	-	-
3F	-	-	-	-
3G	-	-	-	-
3H	-	-	-	-
3I	-	-	-	-
3J	-	-	-	-
3K	-	-	-	-
3L	-	-	-	-
3M	-	-	-	-
3N	-	-	-	-
3O	-	-	-	-
℄ W BRG PIER 6 EB	-	-	-	-
℄ PIER 6 EB	-	-	-	-
℄ E BRG PIER 6 EB	-	-	-	-
3P	-	-	-	-
3Q	-	-	-	-
3R	-	-	-	-
3S	-	-	-	-
3T	-	-	-	-
3U	-	-	-	-
3V	-	-	-	-
3W	-	-	-	-
3X	-	-	-	-
3Y	54+50.86	36.05	584.82	585.10
3Z	54+60.84	36.57	584.51	584.77
3AA	54+70.83	37.09	584.19	584.43
3AB	54+80.82	37.62	583.88	584.08
3AC	54+90.80	38.14	583.56	583.72
3AD	55+00.79	38.66	583.24	583.36
3AE	55+10.78	39.19	582.93	582.99
℄ W. BRG. PIER 7 EB	55+19.75	39.66	582.64	582.66
℄ PIER 7 EB	55+20.87	39.71	582.61	582.63
℄ E. BRG. PIER 7 EB	55+22.00	39.77	582.57	582.59
3AF	55+31.98	40.30	582.25	582.32
3AG	55+41.97	40.82	581.94	582.05
3AH	55+51.95	41.34	581.62	581.78
3AI	55+61.94	41.87	581.33	581.52
3AJ	55+71.93	42.39	581.06	581.27
3AK	55+81.91	42.91	580.78	581.02
3AL	55+91.90	43.44	580.51	580.76
3AM	56+01.89	43.96	580.24	580.50
3AN	56+11.87	44.48	579.97	580.22
3AO	56+21.86	45.01	579.70	579.94
3AP	56+31.84	45.53	579.43	579.65
3AQ	56+41.83	46.05	579.16	579.36
3AR	56+51.82	46.58	578.89	579.05
3AS	56+61.80	47.10	578.62	578.74
3AT	56+71.79	47.62	578.35	578.42
℄ W. BRG. PIER 8EB	56+80.91	48.10	578.09	578.11
℄ PIER 8 EB	56+82.12	48.16	578.05	578.07

BEAM E8

Location	Station	Offset	Theoretical Grade Elevations	Theoretical Grade Elevations Adjusted for Dead Load Deflection and Grinding
℄ PIER 5 EB	51+85.12	43.25	592.82	592.84
℄ E BRG. PIER 5 EB	51+86.87	43.25	592.77	592.79
3A	51+96.87	43.25	592.46	592.54
3B	52+06.87	43.25	592.16	592.29
3C	52+16.87	43.25	591.85	592.02
3D	52+26.87	43.25	591.55	591.75
3E	52+36.87	43.25	591.24	591.47
3F	52+46.87	43.25	590.93	591.18
3G	52+56.87	43.25	590.63	590.89
3H	52+66.87	43.25	590.32	590.59
3I	52+76.87	43.25	590.01	590.27
3J	52+86.87	43.25	589.71	589.95
3K	52+96.87	43.25	589.40	589.63
3L	53+06.87	43.25	589.09	589.30
3M	53+16.87	43.25	588.79	588.96
3N	53+26.87	43.25	588.48	588.61
3O	53+36.87	43.25	588.18	588.26
℄ W BRG PIER 6 EB	53+48.75	43.25	587.81	587.83
℄ PIER 6 EB	53+49.87	43.25	587.78	587.80
℄ E BRG PIER 6 EB	53+51.00	43.25	587.74	587.76
3P	53+60.99	43.31	587.43	587.51
3Q	53+70.99	43.36	587.13	587.25
3R	53+80.99	43.42	586.82	586.99
3S	53+90.99	43.48	586.51	586.72
3T	54+00.99	43.54	586.20	586.45
3U	54+10.99	43.59	585.90	586.16
3V	54+20.99	43.65	585.59	585.87
3W	54+30.99	43.71	585.28	585.57
3X	54+40.99	43.77	584.97	585.26
3Y	54+50.99	43.82	584.65	584.93
3Z	54+60.99	43.88	584.35	584.61
3AA	54+70.99	43.94	584.04	584.28
3AB	54+80.99	44.00	583.73	583.94
3AC	54+90.99	44.05	583.43	583.59
3AD	55+00.99	44.11	583.12	583.24
3AE	55+10.99	44.17	582.81	582.88
℄ W. BRG. PIER 7 EB	55+19.75	44.22	582.54	582.56
℄ PIER 7 EB	55+20.87	44.22	582.51	582.53
℄ E. BRG. PIER 7 EB	55+22.00	44.26	582.47	582.49
3AF	55+31.99	44.64	582.16	582.23
3AG	55+41.98	45.01	581.85	581.96
3AH	55+51.97	45.39	581.53	581.69
3AI	55+61.97	45.77	581.24	581.43
3AJ	55+71.96	46.14	580.97	581.19
3AK	55+81.95	46.52	580.71	580.94
3AL	55+91.95	46.89	580.44	580.69
3AM	56+01.94	47.27	580.17	580.43
3AN	56+11.93	47.65	579.90	580.15
3AO	56+21.92	48.02	579.64	579.88
3AP	56+31.92	48.40	579.37	579.59
3AQ	56+41.91	48.77	579.10	579.29
3AR	56+51.90	49.15	578.83	578.99
3AS	56+61.90	49.52	578.57	578.68
3AT	56+71.89	49.90	578.30	578.37
℄ W. BRG. PIER 8EB	56+80.91	50.24	578.04	578.06
℄ PIER 8 EB	56+82.12	50.28	578.01	578.03

BEAM E9

Location	Station	Offset	Theoretical Grade Elevations	Theoretical Grade Elevations Adjusted for Dead Load Deflection and Grinding
℄ PIER 5 EB	51+85.12	50.88	592.67	592.69
℄ E BRG. PIER 5 EB	51+86.87	50.88	592.61	592.63
3A	51+96.87	50.88	592.31	592.39
3B	52+06.87	50.88	592.01	592.13
3C	52+16.87	50.88	591.70	591.87
3D	52+26.87	50.88	591.39	591.60
3E	52+36.87	50.88	591.09	591.32
3F	52+46.87	50.88	590.78	591.03
3G	52+56.87	50.88	590.48	590.73
3H	52+66.87	50.88	590.17	590.43
3I	52+76.87	50.88	589.86	590.12
3J	52+86.87	50.88	589.56	589.80
3K	52+96.87	50.88	589.25	589.48
3L	53+06.87	50.88	588.94	589.14
3M	53+16.87	50.88	588.64	588.80
3N	53+26.87	50.88	588.33	588.46
3O	53+36.87	50.88	588.02	588.10
℄ W BRG PIER 6 EB	53+48.75	50.88	587.66	587.68
℄ PIER 6 EB	53+49.87	50.88	587.62	587.65
℄ E BRG PIER 6 EB	53+51.00	50.88	587.59	587.61
3P	53+60.99	50.96	587.28	587.36
3Q	53+70.99	51.04	586.97	587.10
3R	53+80.99	51.12	586.67	586.84
3S	53+90.99	51.20	586.36	586.57
3T	54+00.99	51.28	586.05	586.29
3U	54+10.99	51.36	585.74	586.00
3V	54+20.99	51.44	585.43	585.71
3W	54+30.99	51.52	585.12	585.41
3X	54+40.99	51.60	584.82	585.10
3Y	54+50.99	51.68	584.48	584.76
3Z	54+60.99	51.76	584.18	584.44
3AA	54+70.99	51.84	583.87	584.11
3AB	54+80.99	51.92	583.56	583.77
3AC	54+90.99	52.00	583.25	583.42
3AD	55+00.99	52.08	582.95	583.07
3AE	55+10.99	52.16	582.64	582.71
℄ W. BRG. PIER 7 EB	55+19.75	52.23	582.37	582.39
℄ PIER 7 EB	55+20.87	52.23	582.34	582.36
℄ E. BRG. PIER 7 EB	55+22.00	52.28	582.30	582.32
3AF	55+31.98	52.73	581.98	582.06
3AG	55+41.97	53.18	581.67	581.79
3AH	55+51.96	53.63	581.35	581.51
3AI	55+61.95	54.08	581.06	581.25
3AJ	55+71.94	54.53	580.79	581.01
3AK	55+81.93	54.98	580.52	580.76
3AL	55+91.92	55.43	580.25	580.50
3AM	56+01.91	55.88	579.99	580.24
3AN	56+11.90	56.33	579.72	579.97
3AO	56+21.89	56.78	579.45	579.69
3AP	56+31.88	57.23	579.18	579.40
3AQ	56+41.87	57.68	578.91	579.10
3AR	56+51.86	58.13	578.64	578.80
3AS	56+61.85	58.58	578.37	578.49
3AT	56+71.84	59.03	578.10	578.17
℄ W. BRG. PIER 8EB	56+80.91	59.43	577.84	577.86
℄ PIER 8 EB	56+82.12	59.49	577.81	577.83

NOTES:

1. All Elevations and Offsets are in feet.
2. Offsets are measured with respect to the I-80 EB PGL. Negative offsets are left and positive are right of the PGL.

BEAM E10

Location	Station	Offset	Theoretical Grade Elevations	Theoretical Grade Elevations Adjusted for Dead Load Deflection and Grinding
℄ PIER 5 EB	51+85.12	58.50	592.51	592.53
℄ E BRG. PIER 5 EB	51+86.87	58.50	592.46	592.48
3A	51+96.87	58.50	592.16	592.24
3B	52+06.87	58.50	591.86	591.99
3C	52+16.87	58.50	591.55	591.74
3D	52+26.87	58.50	591.24	591.47
3E	52+36.87	58.50	590.94	591.19
3F	52+46.87	58.50	590.63	590.91
3G	52+56.87	58.50	590.32	590.61
3H	52+66.87	58.50	590.02	590.31
3I	52+76.87	58.50	589.71	590.00
3J	52+86.87	58.50	589.40	589.68
3K	52+96.87	58.50	589.10	589.35
3L	53+06.87	58.50	588.79	589.01
3M	53+16.87	58.50	588.48	588.67
3N	53+26.87	58.50	588.18	588.32
3O	53+36.87	58.50	587.87	587.96
℄ W BRG PIER 6 EB	53+48.75	58.50	587.51	587.53
℄ PIER 6 EB	53+49.87	58.50	587.47	587.49
℄ E BRG PIER 6 EB	53+51.00	58.51	587.44	587.46
3P	53+60.99	58.61	587.13	587.21
3Q	53+70.99	58.72	586.82	586.96
3R	53+80.99	58.82	586.51	586.70
3S	53+90.99	58.92	586.20	586.43
3T	54+00.99	59.02	585.89	586.16
3U	54+10.99	59.12	585.59	585.88
3V	54+20.99	59.23	585.28	585.59
3W	54+30.99	59.33	584.97	585.28
3X	54+40.99	59.43	584.66	584.97
3Y	54+50.99	59.53	584.31	584.62
3Z	54+60.99	59.63	584.01	584.29
3AA	54+70.99	59.74	583.70	583.96
3AB	54+80.99	59.84	583.39	583.62
3AC	54+90.99	59.94	583.08	583.27
3AD	55+00.99	60.04	582.77	582.91
3AE	55+10.99	60.15	582.47	582.54
℄ W. BRG. PIER 7 EB	55+19.75	60.23	582.20	582.22
℄ PIER 7 EB	55+20.87	60.24	582.16	582.18
℄ E. BRG. PIER 7 EB	55+22.00	60.30	582.13	582.15
3AF	55+31.98	60.82	581.81	581.89
3AG	55+41.97	61.35	581.49	581.62
3AH	55+51.95	61.87	581.18	581.35
3AI	55+61.94	62.39	580.88	581.09
3AJ	55+71.93	62.92	580.61	580.85
3AK	55+81.91	63.44	580.34	580.60
3AL	55+91.90	63.96	580.07	580.34
3AM	56+01.89	64.49	579.80	580.08
3AN	56+11.87	65.01	579.53	579.80
3AO	56+21.86	65.53	579.26	579.52
3AP	56+31.84	66.06	578.99	579.23
3AQ	56+41.83	66.58	578.72	578.93
3AR	56+51.82	67.10	578.45	578.62
3AS	56+61.80	67.63	578.18	578.31
3AT	56+71.79	68.15	577.91	577.98
℄ W. BRG. PIER 8EB	56+80.91	68.63	577.64	577.66
℄ PIER 8 EB	56+82.12	68.69	577.61	577.63

INSIDE FACE OF SOUTH PARAPET - EB

Location	Station	Offset	Theoretical Grade Elevations	Theoretical Grade Elevations Adjusted for Dead Load Deflection and Grinding
℄ PIER 5 EB	51+85.12	60.00	592.48	592.50
℄ E BRG. PIER 5 EB	51+86.87	60.00	592.43	592.45
3A	51+96.87	60.00	592.13	592.21
3B	52+06.87	60.00	591.83	591.96
3C	52+16.87	60.00	591.52	591.71
3D	52+26.87	60.00	591.21	591.44
3E	52+36.87	60.00	590.91	591.16
3F	52+46.87	60.00	590.60	590.88
3G	52+56.87	60.00	590.29	590.58
3H	52+66.87	60.00	589.99	590.28
3I	52+76.87	60.00	589.68	589.97
3J	52+86.87	60.00	589.37	589.65
3K	52+96.87	60.00	589.07	589.32
3L	53+06.87	60.00	588.76	588.98
3M	53+16.87	60.00	588.45	588.64
3N	53+26.87	60.00	588.15	588.29
3O	53+36.87	60.00	587.84	587.93
℄ W BRG PIER 6 EB	53+48.75	60.00	587.48	587.50
℄ PIER 6 EB	53+49.87	60.00	587.44	587.46
℄ E BRG PIER 6 EB	53+51.00	60.01	587.41	587.43
3P	53+60.99	60.11	587.10	587.18
3Q	53+70.99	60.22	586.79	586.93
3R	53+80.99	60.32	586.48	586.67
3S	53+90.99	60.42	586.17	586.40
3T	54+00.99	60.52	585.86	586.13
3U	54+10.99	60.62	585.56	585.85
3V	54+20.99	60.73	585.25	585.56
3W	54+30.99	60.83	584.94	585.25
3X	54+40.99	60.93	584.63	584.94
3Y	54+50.99	61.03	584.28	584.59
3Z	54+60.99	61.13	583.97	584.26
3AA	54+70.99	61.24	583.67	583.93
3AB	54+80.99	61.34	583.36	583.58
3AC	54+90.99	61.44	583.05	583.23
3AD	55+00.99	61.54	582.74	582.88
3AE	55+10.99	61.65	582.43	582.51
℄ W. BRG. PIER 7 EB	55+19.75	61.74	582.16	582.18
℄ PIER 7 EB	55+20.87	61.75	582.13	582.15
℄ E. BRG. PIER 7 EB	55+22.00	61.81	582.09	582.11
3AF	55+31.98	62.33	581.78	581.85
3AG	55+41.97	62.85	581.46	581.59
3AH	55+51.95	63.38	581.14	581.31
3AI	55+61.94	63.90	580.85	581.06
3AJ	55+71.93	64.42	580.58	580.82
3AK	55+81.91	64.94	580.31	580.57
3AL	55+91.90	65.47	580.04	580.31
3AM	56+01.89	65.99	579.77	580.04
3AN	56+11.87	66.51	579.50	579.77
3AO	56+21.86	67.04	579.23	579.49
3AP	56+31.84	67.56	578.96	579.20
3AQ	56+41.83	68.08	578.69	578.89
3AR	56+51.82	68.61	578.42	578.59
3AS	56+61.80	69.13	578.14	578.27
3AT	56+71.79	69.65	577.87	577.95
℄ W. BRG. PIER 8EB	56+80.91	70.13	577.61	577.63
℄ PIER 8 EB	56+82.12	70.20	577.58	577.60

NOTES:

1. All Elevations and Offsets are in feet.
2. Offsets are measured with respect to the I-80 EB PGL. Negative offsets are left and positive are right of the PGL.

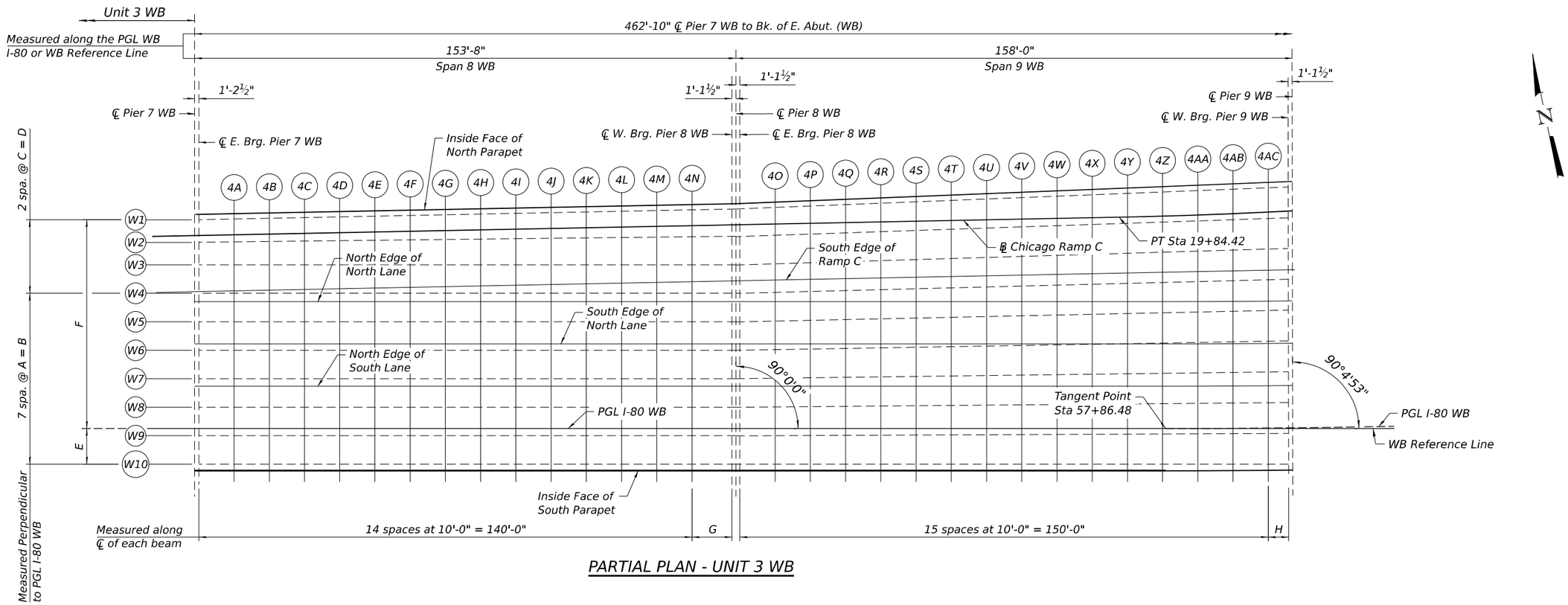

PARTIAL PLAN - UNIT 3 WB

TABLE OF BEAM LENGTHS

LOCATION	G	H	I	J	K
Inside Face of North Parapet	11' - 4 5/16"	5' - 9 9/16"	13	130'-0"	12' - 9 9/16"
Beam W1	11' - 4 5/16"	5' - 9 5/16	13	130'-0"	12' - 10 9/16"
Ramp C	11' - 4 5/16"	5' - 8 5/8"	13	130'-0"	13' - 4 9/16"
Beam W2	11' - 4 1/16"	5' - 9 1/16"	13	130'-0"	13' - 4"
Beam W3	11' - 4"	5' - 8 15/16"	13	130'-0"	13' - 9 9/16"
South Edge of Ramp C	11' - 4"	5' - 8 5/8"	13	130'-0"	14' - 3 1/8"
Beam W4	11' - 4"	5' - 8 7/8"	13	130'-0"	14' - 3 3/16"
North Edge of North Lane	11' - 4"	5' - 8 3/8"	13	130'-0"	14' - 7 3/4"
Beam W5	11' - 4"	5' - 8 7/8"	13	130'-0"	14' - 8 7/8"
South Edge of North Lane	11' - 4"	5' - 8 5/8"	13	140'-0"	5'-3 3/4"
Beam W6	11' - 4"	5' - 8 7/8"	14	140'-0"	5' - 2 5/8"
Beam W7	11' - 4"	5' - 8 7/8"	14	140'-0"	5' - 8 1/2"
North Edge of South Lane	11' - 4"	5' - 8 3/4"	14	140'-0"	5' - 11 11/16"
Beam W8	11' - 4"	5' - 8 15/16"	14	140'-0"	6' - 2 1/2"
PGL I-80 WB	11' - 4"	5' - 8 15/16"	14	140'-0"	6' - 7 5/8"
Beam W9	11' - 4"	5' - 9 1/16"	14	140'-0"	6' - 8 1/2"
Beam W10	11' - 4"	5' - 9 3/16"	14	140'-0"	7' - 2 5/8"
Inside Face of South Parapet	11' - 4"	5' - 9 3/16"	14	140'-0"	7' - 3 5/8"

TABLE OF BEAM LENGTHS

LOCATION	U	V	W	X	Y	Z
Beam W1	37' - 10 1/16" (+)	151' - 4 5/16"	38' - 11 5/16" (+)	155' - 9 5/16"	35' - 8 5/8"(+)	142' - 10 9/16"
Beam W2	37' - 10" (+)	151' - 4 1/16"	38' - 11 1/4" (+)	155' - 9 1/16"	35' - 10"	143' - 4"
Beam W3	37' - 10"	151' - 4"	38' - 11 1/4"(-)	155' - 8 15/16"	35' - 11 3/8" (+)	143' - 9 9/16"
Beam W4	37' - 10"	151' - 4"	38' - 11 1/4"(-)	155' - 8 7/8"	36' - 0 3/4" (+)	144' - 3 3/16"
Beam W5	37' - 10"	151' - 4"	38' - 11 1/4"(-)	155' - 8 7/8"	36' - 2 1/4"(-)	144' - 8 7/8"
Beam W6	37' - 10"	151' - 4"	38' - 11 1/4"(-)	155' - 8 7/8"	36' - 3 5/8" (+)	145' - 2 5/8"
Beam W7	37' - 10"	151' - 4"	38' - 11 1/4"(-)	155' - 8 7/8"	36' - 5 1/8"	145' - 8 1/2"
Beam W8	37' - 10"	151' - 4"	38' - 11 1/4"(-)	155' - 8 15/16"	36' - 6 5/8"	146' - 2 1/2"
Beam W9	37' - 10"	151' - 4"	38' - 11 1/4" (+)	155' - 9 1/16"	36' - 8 1/8"	146' - 8 1/2"
Beam 10	37' - 10"	151' - 4"	38' - 11 5/16" (-)	155' - 9 3/16"	36' - 9 5/8"(+)	147' - 2 5/8"

TABLE OF BEAM SPACING

LOCATION	A	B	C	D	E	F
℄ E BRG. PIER 7 WB	8' - 1"	56' - 7"	6' - 4 7/8"	12' - 9 3/4"	10' - 1 1/2"	59' - 3 1/4"
℄ W BRG PIER 8 WB	8' - 1"	56' - 7"	7' - 11 1/16"	15' - 10 1/8"	10' - 1 1/2"	62' - 3 5/8"
℄ E BRG PIER 8 WB	8' - 1"	56' - 7"	7' - 11 7/16"	15' - 10 7/8"	10' - 1 1/2"	62' - 4 3/8"
℄ W BRG PIER 9 WB	8' - 8 15/16"	61' - 2 9/16"	8' - 8 15/16	17' - 5 7/8"	10' - 3 11/16"	68' 4 3/4"
℄ E BRG PIER 9 WB	8' - 9 1/8"	61' - 3 7/8"	8' - 9 1/8"	17' - 6 1/4"	10' - 4"	68' - 6 1/8"
℄ BRG. E. ABUT. WB	9' - 9 1/8" (+)	68' - 4 3/16"	9' - 9 1/8" (+)	19' - 6 5/16"	11' - 3 3/16"	76' - 7 5/16"

NOTES:

1. Up to ¼ inch to be ground off the bridge deck and bridge approach slabs. The Profile Grade shows the final grade after grinding.

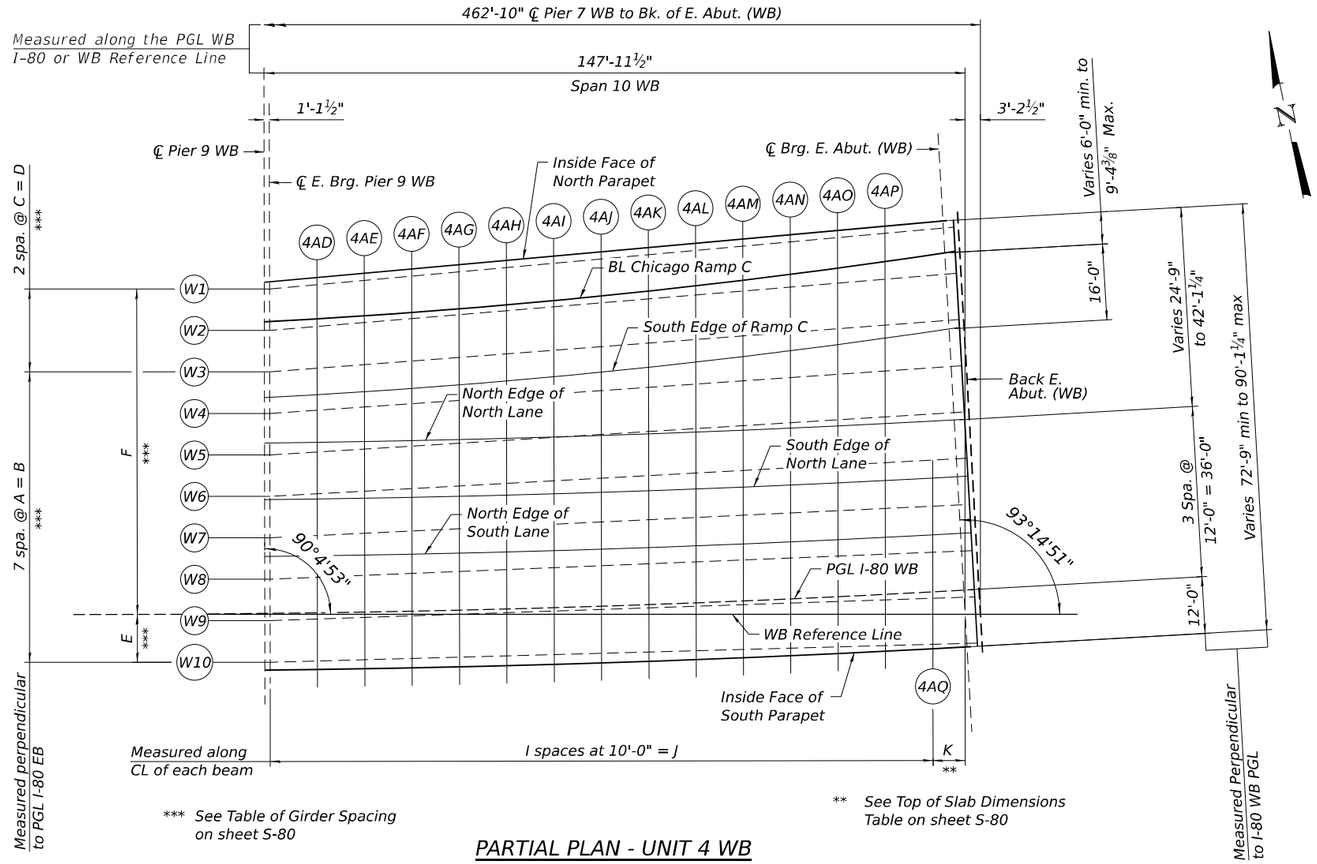

*** See Table of Girder Spacing on sheet S-80

** See Top of Slab Dimensions Table on sheet S-80

PARTIAL PLAN - UNIT 4 WB

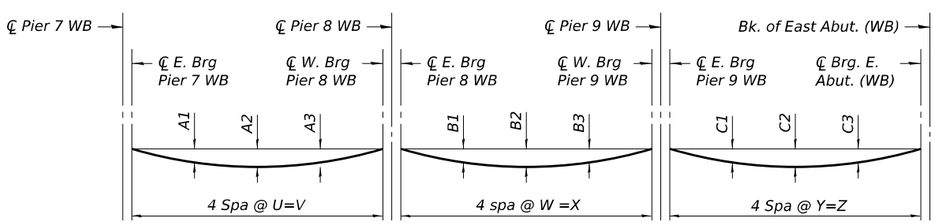

DEAD LOAD DEFLECTION DIAGRAM

(Includes weight of concrete, excluding beams)

Note:
The above deflections are not to be used in the field if the engineer is working from the grade elevations adjusted for dead load deflections and grinding as shown on sheets S-83 to S-87.

Beam	DEAD LOAD DEFLECTIONS (INCHES)								
	Span 8 WB			Span 9 WB			Span 10 WB		
	A1	A2	A3	B1	B2	B3	C1	C2	C3
W1	2 5/8	3 1/2	2 1/2	2 7/8	4	2 7/8	2 1/8	2 7/8	2 1/8
W2	2 1/2	3 3/8	2 3/8	2 5/8	3 5/8	2 5/8	1 7/8	2 5/8	2
W3	2 3/8	3 1/4	2 1/4	2 1/2	3 1/2	2 1/2	2	2 3/4	2
W4	2 1/8	2 7/8	2 1/8	2 5/8	3 5/8	2 5/8	1 7/8	2 1/2	1 7/8
W5	2 1/8	2 7/8	2 1/8	2 5/8	3 1/2	2 5/8	1 7/8	2 1/2	1 7/8
W6	2 1/8	2 7/8	2 1/8	2 5/8	3 1/2	2 5/8	1 7/8	2 1/2	1 7/8
W7	2 1/8	2 7/8	2 1/8	2 1/2	3 3/8	2 1/2	1 7/8	2 1/2	1 7/8
W8	2 1/4	3	2 1/4	2 1/2	3 3/8	2 1/2	1 7/8	2 5/8	2
W9	2 1/4	3	2 1/4	2 3/8	3 1/4	2 3/8	1 7/8	2 5/8	2
W10	2 1/8	2 7/8	2 1/8	2 3/8	3 1/8	2 3/8	1 7/8	2 5/8	2

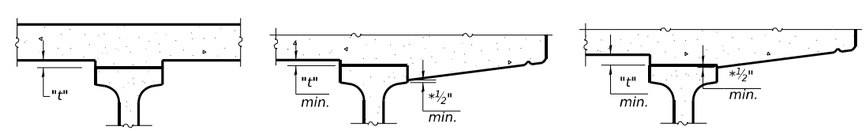

* Variable (not less ½")

At Minimum Fillet

At Maximum Fillet

INMTERIOR BEAMS

EXTERIOR BEAMS

FILLET HEIGHTS

To determine "t": After all precast prestressed beams have been erected, elevations of the top flanges of the beams shall be taken at intervals shown. These elevations subtracted from the "Theoretical Grade Elevations Adjusted for Dead Load Deflection and Grinding" shown on sheets S-83 to S-87, minus the initial slab thickness prior to grinding, equals the fillet heights "t" above top flange of beams.

The slab is to be ground after curing to achieve smoothness, but the slab is not to be ground to elevations below the "Theoretical Grade Elevations" shown on sheets S-83 to S-87. For grinding the deck, see Special Provisions.

NOTES:

1. Up to ¼ inch to be ground off the bridge deck and bridge approach slabs. The Profile Grade shows the final grade after grinding.

INSIDE FACE OF NORTH PARAPET - WB

Location	Station	Offset	Theoretical Grade Elevations	Theoretical Grade Elevations Adjusted for Dead Load Deflection and Grinding
℄ PIER 7 WB	55+10.88	-60.75	582.39	582.42
℄ E BRG. PIER 7 WB	55+12.08	-60.77	582.34	582.37
4A	55+22.08	-60.97	581.93	582.02
4B	55+32.08	-61.17	581.51	581.66
4C	55+42.08	-61.37	581.10	581.30
4D	55+52.08	-61.57	580.73	580.97
4E	55+62.07	-61.77	580.36	580.64
4F	55+72.07	-61.97	580.00	580.30
4G	55+82.07	-62.17	579.64	579.94
4H	55+92.07	-62.37	579.27	579.58
4I	56+02.07	-62.57	578.91	579.20
4J	56+12.06	-62.77	578.54	578.82
4K	56+22.06	-62.97	578.18	578.42
4L	56+32.06	-63.17	577.82	578.02
4M	56+42.06	-63.37	577.45	577.61
4N	56+52.06	-63.57	577.10	577.19
℄ W BRG PIER 8 WB	56+63.42	-63.80	576.69	576.71
℄ PIER 8 WB	56+64.55	-63.82	576.65	576.67
℄ E BRG PIER 8 WB	56+65.67	-63.87	576.61	576.63
4O	56+75.66	-64.27	576.25	576.34
4P	56+85.65	-64.67	575.89	576.05
4Q	56+95.65	-65.06	575.47	575.69
4R	57+05.64	-65.46	575.03	575.30
4S	57+15.63	-65.86	574.60	574.90
4T	57+25.62	-66.26	574.16	574.49
4U	57+35.61	-66.66	573.72	574.06
4V	57+45.61	-67.06	573.28	573.63
4W	57+55.60	-67.46	572.84	573.18
4X	57+65.59	-67.86	572.39	572.71
4Y	57+75.58	-68.26	571.94	572.24
4Z	57+85.57	-68.66	571.49	571.74
4AA	57+95.57	-69.04	571.04	571.24
4AB	58+05.57	-69.40	570.58	570.72
4AC	58+15.86	-69.72	570.13	570.19
℄ W BRG PIER 9 WB	58+21.80	-69.90	569.91	569.93
℄ PIER 9 WB	58+22.96	-69.93	569.86	569.89
℄ E BRG PIER 9 WB	58+24.11	-70.01	569.82	569.84
4AD	58+34.37	-70.79	569.41	569.49
4AE	58+44.64	-71.53	569.00	569.13
4AF	58+54.91	-72.24	568.60	568.77
4AG	58+65.18	-72.92	568.19	568.40
4AH	58+75.46	-73.57	567.79	568.02
4AI	58+85.75	-74.18	567.39	567.64
4AJ	58+96.04	-74.77	566.98	567.24
4AK	59+06.33	-75.33	566.58	566.84
4AL	59+16.62	-75.85	566.18	566.43
4AM	59+26.92	-76.34	565.78	566.01
4AN	59+37.23	-76.81	565.42	565.61
4AO	59+47.54	-77.24	565.08	565.23
4AP	59+57.85	-77.64	564.75	564.85
4AQ	-	-	-	-
℄ BRG. E. ABUT. WB	59+70.79	-78.10	564.33	564.35
℄ EXP. JT.	59+72.16	-78.15	564.29	564.31
BK E. ABUT. WB	59+74.36	-78.31	564.21	564.23

BEAM W1

Location	Station	Offset	Theoretical Grade Elevations	Theoretical Grade Elevations Adjusted for Dead Load Deflection and Grinding
℄ PIER 7 WB	55+10.88	-59.25	582.43	582.45
℄ E BRG. PIER 7 WB	55+12.08	-59.27	582.38	582.40
4A	55+22.08	-59.47	581.96	582.05
4B	55+32.08	-59.67	581.54	581.69
4C	55+42.08	-59.87	581.13	581.33
4D	55+52.08	-60.07	580.76	581.00
4E	55+62.07	-60.27	580.39	580.67
4F	55+72.07	-60.47	580.03	580.33
4G	55+82.07	-60.67	579.67	579.97
4H	55+92.07	-60.87	579.30	579.61
4I	56+02.07	-61.07	578.94	579.23
4J	56+12.06	-61.27	578.57	578.85
4K	56+22.06	-61.47	578.21	578.45
4L	56+32.06	-61.67	577.85	578.05
4M	56+42.06	-61.87	577.48	577.64
4N	56+52.06	-62.07	577.13	577.22
℄ W BRG PIER 8 WB	56+63.42	-62.30	576.72	576.74
℄ PIER 8 WB	56+64.55	-62.33	576.68	576.70
℄ E BRG PIER 8 WB	56+65.67	-62.37	576.64	576.66
4O	56+75.66	-62.77	576.28	576.37
4P	56+85.65	-63.16	575.92	576.08
4Q	56+95.65	-63.56	575.50	575.72
4R	57+05.64	-63.96	575.07	575.33
4S	57+15.63	-64.36	574.63	574.94
4T	57+25.62	-64.76	574.20	574.53
4U	57+35.61	-65.16	573.77	574.11
4V	57+45.61	-65.56	573.33	573.68
4W	57+55.60	-65.96	572.89	573.23
4X	57+65.59	-66.36	572.46	572.78
4Y	57+75.58	-66.76	572.02	572.31
4Z	57+85.57	-67.16	571.57	571.82
4AA	57+95.57	-67.54	571.12	571.32
4AB	58+05.57	-67.90	570.67	570.81
4AC	58+15.85	-68.22	570.22	570.28
℄ W BRG PIER 9 WB	58+21.79	-68.40	570.00	570.02
℄ PIER 9 WB	58+22.95	-68.45	569.95	569.97
℄ E BRG PIER 9 WB	58+24.11	-68.51	569.91	569.93
4AD	58+34.36	-69.28	569.50	569.58
4AE	58+44.62	-70.02	569.09	569.22
4AF	58+54.89	-70.73	568.69	568.86
4AG	58+65.16	-71.41	568.28	568.49
4AH	58+75.43	-72.06	567.88	568.12
4AI	58+85.71	-72.68	567.48	567.73
4AJ	58+95.99	-73.26	567.08	567.34
4AK	59+06.28	-73.82	566.68	566.93
4AL	59+16.57	-74.35	566.28	566.52
4AM	59+26.87	-74.84	565.88	566.10
4AN	59+37.17	-75.30	565.51	565.70
4AO	59+47.47	-75.73	565.18	565.32
4AP	59+57.77	-76.14	564.84	564.94
4AQ	-	-	-	-
℄ BRG. E. ABUT. WB	59+70.79	-76.60	564.42	564.44
℄ EXP. JT.	59+72.17	-76.64	564.38	564.40
BK E. ABUT. WB	59+74.36	-76.72	564.31	564.33

℄ CHICAGO RAMP C

Location	Station	Offset	Theoretical Grade Elevations	Theoretical Grade Elevations Adjusted for Dead Load Deflection and Grinding
℄ PIER 7 WB	55+10.88	-54.75	582.52	582.54
℄ E BRG. PIER 7 WB	55+12.08	-54.77	582.47	582.49
4A	55+22.08	-54.97	582.05	582.14
4B	55+32.08	-55.17	581.64	581.78
4C	55+42.08	-55.37	581.22	581.42
4D	55+52.08	-55.57	580.85	581.09
4E	55+62.07	-55.77	580.49	580.75
4F	55+72.07	-55.97	580.12	580.41
4G	55+82.07	-56.17	579.76	580.05
4H	55+92.07	-56.37	579.40	579.69
4I	56+02.07	-56.57	579.03	579.32
4J	56+12.06	-56.77	578.67	578.93
4K	56+22.06	-56.97	578.30	578.54
4L	56+32.06	-57.17	577.94	578.14
4M	56+42.06	-57.37	577.58	577.72
4N	56+52.06	-57.57	577.22	577.31
℄ W BRG PIER 8 WB	56+63.42	-57.80	576.81	576.83
℄ PIER 8 WB	56+64.55	-57.82	576.77	576.79
℄ E BRG PIER 8 WB	56+65.67	-57.84	576.73	576.75
4O	56+75.67	-58.04	576.38	576.46
4P	56+85.67	-58.24	576.02	576.17
4Q	56+95.66	-58.44	575.62	575.82
4R	57+05.66	-58.64	575.21	575.45
4S	57+15.66	-58.84	574.80	575.08
4T	57+25.66	-59.04	574.39	574.69
4U	57+35.66	-59.24	573.98	574.30
4V	57+45.65	-59.44	573.57	573.89
4W	57+55.65	-59.64	573.16	573.47
4X	57+65.65	-59.84	572.75	573.04
4Y	57+75.65	-60.05	572.34	572.60
4Z	57+85.65	-60.29	571.92	572.15
4AA	57+95.64	-60.60	571.50	571.68
4AB	58+05.65	-60.94	571.07	571.20
4AC	58+15.90	-61.31	570.64	570.70
℄ W BRG PIER 9 WB	58+21.77	-61.54	570.42	570.44
℄ PIER 9 WB	58+22.92	-61.59	570.38	570.40
℄ E BRG PIER 9 WB	58+24.08	-61.63	570.33	570.36
4AD	58+34.33	-62.07	569.95	570.02
4AE	58+44.58	-62.55	569.56	569.68
4AF	58+54.84	-63.06	569.17	569.33
4AG	58+65.09	-63.60	568.77	568.97
4AH	58+75.34	-64.18	568.38	568.59
4AI	58+85.60	-64.80	567.98	568.21
4AJ	58+95.85	-65.45	567.57	567.81
4AK	59+06.10	-66.14	567.17	567.40
4AL	59+16.36	-66.87	566.76	566.98
4AM	59+26.61	-67.63	566.34	566.55
4AN	59+36.86	-68.42	565.96	566.13
4AO	59+47.11	-69.25	565.60	565.73
4AP	59+57.36	-70.12	565.23	565.33
4AQ	-	-	-	-
℄ BRG. E. ABUT. WB	59+70.82	-71.31	564.76	564.78
℄ EXP. JT.	59+72.19	-71.44	564.71	564.73
BK E. ABUT. WB	59+74.38	-71.64	564.63	564.65

NOTES:

1. All Elevations and Offsets are in feet.
2. Offsets are measured with respect to the I-80 WB PGL. Negative offsets are left and positive are right of the PGL.

BEAM W2

Location	Station	Offset	Theoretical Grade Elevations	Theoretical Grade Elevations Adjusted for Dead Load Deflection and Grinding
℄ PIER 7 WB	55+10.88	-52.85	582.56	582.58
℄ E BRG. PIER 7 WB	55+12.08	-52.87	582.51	582.53
4A	55+22.08	-52.98	582.09	582.18
4B	55+32.08	-53.09	581.68	581.83
4C	55+42.08	-53.20	581.26	581.46
4D	55+52.08	-53.31	580.90	581.13
4E	55+62.08	-53.42	580.54	580.80
4F	55+72.08	-53.53	580.17	580.46
4G	55+82.08	-53.64	579.81	580.11
4H	55+92.08	-53.75	579.45	579.74
4I	56+02.08	-53.86	579.09	579.37
4J	56+12.08	-53.97	578.72	578.99
4K	56+22.08	-54.09	578.36	578.60
4L	56+32.08	-54.20	578.00	578.20
4M	56+42.08	-54.31	577.64	577.79
4N	56+52.08	-54.42	577.28	577.38
℄ W BRG PIER 8 WB	56+63.42	-54.54	576.88	576.90
℄ PIER 8 WB	56+64.55	-54.56	576.84	576.86
℄ E BRG PIER 8 WB	56+65.67	-54.54	576.80	576.82
4O	56+75.66	-54.88	576.44	576.53
4P	56+85.66	-55.22	576.08	576.23
4Q	56+95.65	-55.56	575.68	575.88
4R	57+05.65	-55.90	575.28	575.52
4S	57+15.64	-56.24	574.87	575.14
4T	57+25.64	-56.58	574.48	574.79
4U	57+35.63	-56.92	574.07	574.38
4V	57+45.62	-57.26	573.65	573.97
4W	57+55.62	-57.60	573.24	573.55
4X	57+65.61	-57.94	572.84	573.14
4Y	57+75.61	-58.28	572.43	572.69
4Z	57+85.60	-58.62	572.02	572.24
4AA	57+95.59	-58.95	571.59	571.77
4AB	58+05.60	-59.25	571.18	571.31
4AC	58+15.86	-59.51	570.75	570.81
℄ W BRG PIER 9 WB	58+21.76	-59.65	570.54	570.56
℄ PIER 9 WB	58+22.91	-59.70	570.50	570.52
℄ E BRG PIER 9 WB	58+24.07	-59.75	570.45	570.47
4AD	58+34.30	-60.45	570.05	570.12
4AE	58+44.53	-61.12	569.65	569.77
4AF	58+54.78	-61.76	569.25	569.41
4AG	58+65.02	-62.37	568.85	569.05
4AH	58+75.27	-62.94	568.46	568.67
4AI	58+85.52	-63.49	568.06	568.29
4AJ	58+95.78	-64.00	567.67	567.91
4AK	59+06.04	-64.49	567.27	567.51
4AL	59+16.31	-64.94	566.88	567.10
4AM	59+26.57	-65.37	566.49	566.69
4AN	59+36.84	-65.76	566.12	566.30
4AO	59+47.12	-66.12	565.79	565.93
4AP	59+57.39	-66.45	565.47	565.56
4AQ	-	-	-	-
℄ BRG. E. ABUT. WB	59+70.84	-66.84	565.04	565.06
℄ EXP. JT.	59+72.21	-66.87	565.00	565.02
BK E. ABUT. WB	59+74.40	-66.93	564.93	564.95

BEAM W3

Location	Station	Offset	Theoretical Grade Elevations	Theoretical Grade Elevations Adjusted for Dead Load Deflection and Grinding
℄ PIER 7 WB	55+10.88	-46.46	582.69	582.71
℄ E BRG. PIER 7 WB	55+12.08	-46.46	582.64	582.66
4A	55+22.08	-46.46	582.23	582.31
4B	55+32.08	-46.46	581.82	581.96
4C	55+42.08	-46.46	581.41	581.60
4D	55+52.08	-46.46	581.04	581.27
4E	55+62.08	-46.46	580.68	580.94
4F	55+72.08	-46.46	580.32	580.60
4G	55+82.08	-46.46	579.96	580.24
4H	55+92.08	-46.46	579.60	579.88
4I	56+02.08	-46.46	579.24	579.51
4J	56+12.08	-46.46	578.88	579.13
4K	56+22.08	-46.46	578.52	578.75
4L	56+32.08	-46.46	578.16	578.35
4M	56+42.08	-46.46	577.80	577.94
4N	56+52.08	-46.46	577.45	577.54
℄ W BRG PIER 8 WB	56+63.42	-46.46	577.05	577.07
℄ PIER 8 WB	56+64.55	-46.46	577.01	577.03
℄ E BRG PIER 8 WB	56+65.67	-46.45	576.97	576.99
4O	56+75.67	-46.75	576.61	576.69
4P	56+85.66	-47.05	576.25	576.39
4Q	56+95.66	-47.35	575.87	576.07
4R	57+05.65	-47.65	575.48	575.72
4S	57+15.65	-47.94	575.12	575.38
4T	57+25.64	-48.24	574.75	575.04
4U	57+35.64	-48.54	574.38	574.68
4V	57+45.63	-48.84	573.96	574.27
4W	57+55.63	-49.13	573.59	573.89
4X	57+65.63	-49.43	573.23	573.51
4Y	57+75.62	-49.73	572.85	573.11
4Z	57+85.62	-50.03	572.46	572.68
4AA	57+95.61	-50.31	572.08	572.25
4AB	58+05.62	-50.57	571.68	571.80
4AC	58+15.85	-50.79	571.29	571.35
℄ W BRG PIER 9 WB	58+21.72	-50.91	571.08	571.10
℄ PIER 9 WB	58+22.88	-50.95	571.04	571.06
℄ E BRG PIER 9 WB	58+24.03	-50.99	570.99	571.02
4AD	58+34.23	-51.62	570.60	570.68
4AE	58+44.45	-52.22	570.20	570.33
4AF	58+54.66	-52.78	569.81	569.98
4AG	58+64.88	-53.32	569.42	569.62
4AH	58+75.11	-53.83	569.03	569.26
4AI	58+85.33	-54.30	568.64	568.88
4AJ	58+95.57	-54.75	568.26	568.50
4AK	59+05.80	-55.16	567.87	568.11
4AL	59+16.04	-55.55	567.48	567.72
4AM	59+26.28	-55.90	567.10	567.31
4AN	59+36.52	-56.22	566.73	566.92
4AO	59+46.76	-56.51	566.41	566.55
4AP	59+57.01	-56.77	566.09	566.19
4AQ	-	-	-	-
℄ BRG. E. ABUT. WB	59+70.89	-57.08	565.66	565.68
℄ EXP. JT.	59+72.26	-57.10	565.61	565.63
BK E. ABUT. WB	59+74.44	-57.14	565.55	565.57

SOUTH EDGE OF RAMP C

Location	Station	Offset	Theoretical Grade Elevations	Theoretical Grade Elevations Adjusted for Dead Load Deflection and Grinding
℄ PIER 7 WB	55+10.88	-38.75	582.85	582.87
℄ E BRG. PIER 7 WB	55+12.08	-38.77	582.80	582.82
4A	55+22.08	-38.97	582.39	582.46
4B	55+32.08	-39.17	581.97	582.10
4C	55+42.08	-39.37	581.55	581.73
4D	55+52.08	-39.57	581.18	581.39
4E	55+62.07	-39.77	580.82	581.05
4F	55+72.07	-39.97	580.46	580.71
4G	55+82.07	-40.17	580.09	580.35
4H	55+92.07	-40.37	579.73	579.98
4I	56+02.07	-40.57	579.36	579.61
4J	56+12.06	-40.77	579.00	579.23
4K	56+22.06	-40.97	578.64	578.84
4L	56+32.06	-41.17	578.27	578.45
4M	56+42.06	-41.37	577.91	578.04
4N	56+52.06	-41.57	577.55	577.64
℄ W BRG PIER 8 WB	56+63.42	-41.80	577.14	577.17
℄ PIER 8 WB	56+64.55	-41.82	577.10	577.13
℄ E BRG PIER 8 WB	56+65.67	-41.84	577.06	577.08
4O	56+75.67	-42.04	576.71	576.80
4P	56+85.67	-42.24	576.35	576.50
4Q	56+95.66	-42.44	575.99	576.20
4R	57+05.66	-42.64	575.63	575.88
4S	57+15.66	-42.84	575.27	575.55
4T	57+25.66	-43.04	574.91	575.22
4U	57+35.66	-43.24	574.55	574.87
4V	57+45.65	-43.44	574.19	574.51
4W	57+55.65	-43.64	573.83	574.14
4X	57+65.65	-43.84	573.47	573.76
4Y	57+75.65	-44.04	573.11	573.38
4Z	57+85.65	-44.29	572.74	572.97
4AA	57+95.64	-44.59	572.38	572.56
4AB	58+05.65	-44.92	572.01	572.14
4AC	58+15.85	-45.29	571.63	571.69
℄ W BRG PIER 9 WB	58+21.70	-45.52	571.41	571.43
℄ PIER 9 WB	58+22.85	-45.57	571.37	571.39
℄ E BRG PIER 9 WB	58+24.00	-45.61	571.33	571.35
4AD	58+34.20	-46.05	570.94	571.02
4AE	58+44.40	-46.51	570.56	570.68
4AF	58+54.61	-47.02	570.17	570.33
4AG	58+64.81	-47.56	569.78	569.97
4AH	58+75.01	-48.13	569.39	569.60
4AI	58+85.21	-48.74	568.99	569.22
4AJ	58+95.41	-49.38	568.60	568.82
4AK	59+05.61	-50.06	568.19	568.42
4AL	59+15.81	-50.78	567.79	568.00
4AM	59+26.01	-51.53	567.38	567.58
4AN	59+36.21	-52.31	566.99	567.16
4AO	59+46.41	-53.13	566.63	566.77
4AP	59+56.61	-53.99	566.27	566.37
4AQ	-	-	-	-
℄ BRG. E. ABUT. WB	59+70.90	-55.25	565.77	565.79
℄ EXP. JT.	59+72.27	-55.37	565.72	565.74
BK E. ABUT. WB	59+74.44	-55.57	565.65	565.67

NOTES:

1. All Elevations and Offsets are in feet.
2. Offsets are measured with respect to the I-80 WB PGL. Negative offsets are left and positive are right of the PGL.

BEAM W4

Location	Station	Offset	Theoretical Grade Elevations	Theoretical Grade Elevations Adjusted for Dead Load Deflection and Grinding
℄ PIER 7 WB	55+10.88	-38.38	582.86	582.88
℄ E BRG. PIER 7 WB	55+12.08	-38.38	582.81	582.83
4A	55+22.08	-38.38	582.40	582.48
4B	55+32.08	-38.38	581.99	582.11
4C	55+42.08	-38.38	581.57	581.75
4D	55+52.08	-38.38	581.21	581.41
4E	55+62.08	-38.38	580.85	581.08
4F	55+72.08	-38.38	580.49	580.74
4G	55+82.08	-38.38	580.13	580.38
4H	55+92.08	-38.38	579.77	580.02
4I	56+02.08	-38.38	579.41	579.66
4J	56+12.08	-38.38	579.05	579.28
4K	56+22.08	-38.38	578.69	578.90
4L	56+32.08	-38.38	578.33	578.50
4M	56+42.08	-38.38	577.97	578.10
4N	56+52.08	-38.38	577.61	577.70
℄ W BRG PIER 8 WB	56+63.42	-38.38	577.22	577.24
℄ PIER 8 WB	56+64.55	-38.38	577.18	577.20
℄ E BRG PIER 8 WB	56+65.67	-38.37	577.14	577.16
4O	56+75.67	-38.63	576.79	576.88
4P	56+85.66	-38.88	576.43	576.58
4Q	56+95.66	-39.14	576.07	576.28
4R	57+05.66	-39.39	575.72	575.97
4S	57+15.65	-39.65	575.36	575.64
4T	57+25.65	-39.90	575.00	575.31
4U	57+35.65	-40.16	574.64	574.96
4V	57+45.64	-40.41	574.28	574.61
4W	57+55.64	-40.67	573.92	574.24
4X	57+65.64	-40.92	573.56	573.86
4Y	57+75.63	-41.18	573.20	573.47
4Z	57+85.63	-41.44	572.84	573.08
4AA	57+95.63	-41.68	572.48	572.67
4AB	58+05.64	-41.89	572.12	572.25
4AC	58+15.83	-42.07	571.76	571.82
℄ W BRG PIER 9 WB	58+21.69	-42.16	571.55	571.57
℄ PIER 9 WB	58+22.84	-42.19	571.51	571.53
℄ E BRG PIER 9 WB	58+23.99	-42.23	571.47	571.49
4AD	58+34.17	-42.79	571.08	571.15
4AE	58+44.36	-43.31	570.70	570.82
4AF	58+54.55	-43.81	570.32	570.47
4AG	58+64.74	-44.28	569.94	570.12
4AH	58+74.94	-44.71	569.55	569.76
4AI	58+85.14	-45.12	569.17	569.39
4AJ	58+95.35	-45.49	568.79	569.01
4AK	59+05.55	-45.84	568.41	568.63
4AL	59+15.76	-46.15	568.02	568.24
4AM	59+25.97	-46.43	567.64	567.84
4AN	59+36.19	-46.69	567.28	567.45
4AO	59+46.40	-46.91	566.96	567.09
4AP	59+56.62	-47.10	566.63	566.73
4AQ	-	-	-	-
℄ BRG. E. ABUT. WB	59+70.94	-47.31	566.18	566.20
℄ EXP. JT.	59+72.30	-47.33	566.14	566.16
BK E. ABUT. WB	59+74.47	-47.36	566.07	566.09

NORTH EDGE OF NORTH LANE - WB

Location	Station	Offset	Theoretical Grade Elevations	Theoretical Grade Elevations Adjusted for Dead Load Deflection and Grinding
℄ PIER 7 WB	55+10.88	-36.00	582.91	582.93
℄ E BRG. PIER 7 WB	55+12.08	-36.00	582.86	582.88
4A	55+22.08	-36.00	582.45	582.52
4B	55+32.08	-36.00	582.03	582.16
4C	55+42.08	-36.00	581.62	581.79
4D	55+52.08	-36.00	581.26	581.46
4E	55+62.08	-36.00	580.89	581.13
4F	55+72.08	-36.00	580.53	580.78
4G	55+82.08	-36.00	580.17	580.43
4H	55+92.08	-36.00	579.81	580.07
4I	56+02.08	-36.00	579.45	579.70
4J	56+12.08	-36.00	579.09	579.33
4K	56+22.08	-36.00	578.73	578.94
4L	56+32.08	-36.00	578.37	578.55
4M	56+42.08	-36.00	578.01	578.15
4N	56+52.08	-36.00	577.67	577.75
℄ W BRG PIER 8 WB	56+63.42	-36.00	577.27	577.29
℄ PIER 8 WB	56+64.55	-36.00	577.23	577.25
℄ E BRG PIER 8 WB	56+65.67	-36.00	577.20	577.22
4O	56+75.67	-36.00	576.85	576.94
4P	56+85.67	-36.00	576.50	576.65
4Q	56+95.67	-36.00	576.16	576.36
4R	57+05.67	-36.00	575.81	576.05
4S	57+15.67	-36.00	575.46	575.74
4T	57+25.67	-36.00	575.12	575.41
4U	57+35.67	-36.00	574.77	575.08
4V	57+45.67	-36.00	574.42	574.73
4W	57+55.67	-36.00	574.08	574.38
4X	57+65.67	-36.00	573.73	574.02
4Y	57+75.67	-36.00	573.38	573.65
4Z	57+85.67	-36.00	573.04	573.26
4AA	57+95.67	-36.00	572.69	572.87
4AB	58+05.68	-36.00	572.34	572.47
4AC	58+15.86	-36.00	571.99	572.05
℄ W BRG PIER 9 WB	58+21.67	-36.00	571.79	571.81
℄ PIER 9 WB	58+22.81	-36.00	571.75	571.77
℄ E BRG PIER 9 WB	58+23.96	-36.00	571.71	571.73
4AD	58+34.14	-36.00	571.36	571.43
4AE	58+44.32	-36.00	571.01	571.12
4AF	58+54.50	-36.00	570.65	570.81
4AG	58+64.69	-36.00	570.30	570.49
4AH	58+74.87	-36.00	569.95	570.16
4AI	58+85.05	-36.00	569.59	569.82
4AJ	58+95.23	-36.00	569.24	569.47
4AK	59+05.42	-36.00	568.89	569.11
4AL	59+15.60	-36.00	568.54	568.75
4AM	59+25.78	-36.00	568.18	568.38
4AN	59+35.97	-36.00	567.84	568.01
4AO	59+46.15	-36.00	567.53	567.67
4AP	59+56.33	-36.00	567.22	567.31
4AQ	-	-	-	-
℄ BRG. E. ABUT. WB	59+71.00	-36.00	566.77	566.79
℄ EXP. JT.	59+72.35	-36.00	566.73	566.75
BK E. ABUT. WB	59+74.52	-36.00	566.66	566.68

BEAM W5

Location	Station	Offset	Theoretical Grade Elevations	Theoretical Grade Elevations Adjusted for Dead Load Deflection and Grinding
℄ PIER 7 WB	55+10.88	-30.29	582.99	583.01
℄ E BRG. PIER 7 WB	55+12.08	-30.29	582.94	582.96
4A	55+22.08	-30.29	582.53	582.61
4B	55+32.08	-30.29	582.12	582.25
4C	55+42.08	-30.29	581.71	581.88
4D	55+52.08	-30.29	581.34	581.55
4E	55+62.08	-30.29	580.98	581.21
4F	55+72.08	-30.29	580.62	580.87
4G	55+82.08	-30.29	580.26	580.52
4H	55+92.08	-30.29	579.90	580.16
4I	56+02.08	-30.29	579.54	579.79
4J	56+12.08	-30.29	579.18	579.42
4K	56+22.08	-30.29	578.83	579.04
4L	56+32.08	-30.29	578.47	578.65
4M	56+42.08	-30.29	578.13	578.26
4N	56+52.08	-30.29	577.78	577.87
℄ W BRG PIER 8 WB	56+63.42	-30.29	577.40	577.42
℄ PIER 8 WB	56+64.55	-30.29	577.36	577.39
℄ E BRG PIER 8 WB	56+65.67	-30.29	577.33	577.35
4O	56+75.67	-30.50	576.98	577.07
4P	56+85.67	-30.71	576.63	576.78
4Q	56+95.66	-30.93	576.29	576.49
4R	57+05.66	-31.14	575.94	576.19
4S	57+15.66	-31.35	575.60	575.87
4T	57+25.66	-31.57	575.25	575.55
4U	57+35.65	-31.78	574.90	575.21
4V	57+45.65	-31.99	574.55	574.86
4W	57+55.65	-32.20	574.20	574.50
4X	57+65.65	-32.42	573.85	574.14
4Y	57+75.65	-32.63	573.50	573.76
4Z	57+85.64	-32.84	573.16	573.38
4AA	57+95.64	-33.04	572.80	572.98
4AB	58+05.65	-33.21	572.45	572.58
4AC	58+15.82	-33.35	572.10	572.16
℄ W BRG PIER 9 WB	58+21.66	-33.42	571.90	571.92
℄ PIER 9 WB	58+22.80	-33.44	571.86	571.88
℄ E BRG PIER 9 WB	58+23.95	-33.47	571.82	571.84
4AD	58+34.11	-33.96	571.45	571.52
4AE	58+44.27	-34.41	571.07	571.19
4AF	58+54.43	-34.84	570.71	570.86
4AG	58+64.60	-35.24	570.34	570.53
4AH	58+74.78	-35.60	569.97	570.18
4AI	58+84.95	-35.94	569.60	569.82
4AJ	58+95.13	-36.24	569.23	569.46
4AK	59+05.31	-36.52	568.87	569.09
4AL	59+15.49	-36.76	568.50	568.72
4AM	59+25.67	-36.98	568.14	568.34
4AN	59+35.85	-37.16	567.79	567.96
4AO	59+46.04	-37.31	567.47	567.60
4AP	59+56.23	-37.43	567.15	567.24
4AQ	-	-	-	-
℄ BRG. E. ABUT. WB	59+70.99	-37.55	566.69	566.71
℄ EXP. JT.	59+72.35	-37.56	566.65	566.67
BK E. ABUT. WB	59+74.51	-37.57	566.58	566.60

NOTES:

1. All Elevations and Offsets are in feet.
2. Offsets are measured with respect to the I-80 WB PGL. Negative offsets are left and positive are right of the PGL.

SOUTH EDGE OF NORTH LANE - WB

Location	Station	Offset	Theoretical Grade Elevations	Theoretical Grade Elevations Adjusted for Dead Load Deflection and Grinding
℄ PIER 7 WB	55+10.88	-24.00	583.09	583.11
℄ E BRG. PIER 7 WB	55+12.08	-24.00	583.04	583.06
4A	55+22.08	-24.00	582.63	582.70
4B	55+32.08	-24.00	582.21	582.34
4C	55+42.08	-24.00	581.80	581.97
4D	55+52.08	-24.00	581.44	581.64
4E	55+62.08	-24.00	581.07	581.31
4F	55+72.08	-24.00	580.71	580.96
4G	55+82.08	-24.00	580.35	580.61
4H	55+92.08	-24.00	579.99	580.25
4I	56+02.08	-24.00	579.63	579.88
4J	56+12.08	-24.00	579.28	579.51
4K	56+22.08	-24.00	578.94	579.14
4L	56+32.08	-24.00	578.59	578.77
4M	56+42.08	-24.00	578.25	578.39
4N	56+52.08	-24.00	577.92	578.00
℄ W BRG PIER 8 WB	56+63.42	-24.00	577.54	577.56
℄ PIER 8 WB	56+64.55	-24.00	577.50	577.52
℄ E BRG PIER 8 WB	56+65.67	-24.00	577.46	577.48
4O	56+75.67	-24.00	577.13	577.22
4P	56+85.67	-24.00	576.80	576.95
4Q	56+95.67	-24.00	576.46	576.67
4R	57+05.67	-24.00	576.13	576.37
4S	57+15.67	-24.00	575.80	576.07
4T	57+25.67	-24.00	575.46	575.76
4U	57+35.67	-24.00	575.13	575.44
4V	57+45.67	-24.00	574.80	575.11
4W	57+55.67	-24.00	574.47	574.77
4X	57+65.67	-24.00	574.13	574.42
4Y	57+75.67	-24.00	573.80	574.06
4Z	57+85.67	-24.00	573.47	573.69
4AA	57+95.67	-24.00	573.13	573.31
4AB	58+05.68	-24.00	572.80	572.93
4AC	58+15.82	-24.00	572.46	572.52
℄ W BRG PIER 9 WB	58+21.62	-24.00	572.27	572.29
℄ PIER 9 WB	58+22.76	-24.00	572.23	572.25
℄ E BRG PIER 9 WB	58+23.90	-24.00	572.19	572.21
4AD	58+34.05	-24.00	571.85	571.93
4AE	58+44.19	-24.00	571.52	571.63
4AF	58+54.33	-24.00	571.18	571.34
4AG	58+64.48	-24.00	570.84	571.03
4AH	58+74.62	-24.00	570.50	570.71
4AI	58+84.76	-24.00	570.16	570.39
4AJ	58+94.91	-24.00	569.83	570.05
4AK	59+05.05	-24.00	569.49	569.71
4AL	59+15.20	-24.00	569.15	569.37
4AM	59+25.34	-24.00	568.81	569.01
4AN	59+35.49	-24.00	568.48	568.65
4AO	59+45.63	-24.00	568.17	568.31
4AP	59+55.78	-24.00	567.86	567.96
4AQ	59+65.92	-24.00	567.55	567.59
℄ BRG. E. ABUT. WB	59+71.05	-24.00	567.39	567.41
℄ EXP. JT.	59+72.41	-24.00	567.35	567.37
BK E. ABUT. WB	59+74.56	-24.00	567.28	567.30

BEAM W6

Location	Station	Offset	Theoretical Grade Elevations	Theoretical Grade Elevations Adjusted for Dead Load Deflection and Grinding
℄ PIER 7 WB	55+10.88	-22.21	583.07	583.09
℄ E BRG. PIER 7 WB	55+12.08	-22.21	583.02	583.04
4A	55+22.08	-22.21	582.61	582.68
4B	55+32.08	-22.21	582.19	582.32
4C	55+42.08	-22.21	581.80	581.97
4D	55+52.08	-22.21	581.44	581.64
4E	55+62.08	-22.21	581.09	581.32
4F	55+72.08	-22.21	580.73	580.98
4G	55+82.08	-22.21	580.37	580.63
4H	55+92.08	-22.21	580.01	580.27
4I	56+02.08	-22.21	579.66	579.91
4J	56+12.08	-22.21	579.30	579.54
4K	56+22.08	-22.21	578.97	579.18
4L	56+32.08	-22.21	578.63	578.81
4M	56+42.08	-22.21	578.29	578.42
4N	56+52.08	-22.21	577.96	578.04
℄ W BRG PIER 8 WB	56+63.42	-22.21	577.58	577.60
℄ PIER 8 WB	56+64.55	-22.21	577.54	577.56
℄ E BRG PIER 8 WB	56+65.67	-22.21	577.50	577.52
4O	56+75.67	-22.38	577.17	577.25
4P	56+85.67	-22.55	576.83	576.98
4Q	56+95.67	-22.72	576.50	576.70
4R	57+05.66	-22.89	576.16	576.40
4S	57+15.66	-23.06	575.82	576.10
4T	57+25.66	-23.23	575.49	575.78
4U	57+35.66	-23.40	575.15	575.46
4V	57+45.66	-23.57	574.81	575.12
4W	57+55.66	-23.74	574.47	574.78
4X	57+65.66	-23.91	574.14	574.42
4Y	57+75.65	-24.08	573.80	574.06
4Z	57+85.65	-24.25	573.46	573.68
4AA	57+95.65	-24.41	573.12	573.30
4AB	58+05.66	-24.53	572.78	572.91
4AC	58+15.80	-24.63	572.44	572.50
℄ W BRG PIER 9 WB	58+21.62	-24.67	572.24	572.26
℄ PIER 9 WB	58+22.76	-24.68	572.20	572.22
℄ E BRG PIER 9 WB	58+23.91	-24.71	572.16	572.19
4AD	58+34.04	-25.13	571.81	571.88
4AE	58+44.18	-25.51	571.45	571.57
4AF	58+54.32	-25.87	571.10	571.26
4AG	58+64.46	-26.20	570.74	570.93
4AH	58+74.61	-26.50	570.39	570.60
4AI	58+84.75	-26.76	570.04	570.26
4AJ	58+94.90	-27.00	569.69	569.91
4AK	59+05.06	-27.20	569.33	569.56
4AL	59+15.21	-27.38	568.99	569.20
4AM	59+25.36	-27.52	568.63	568.83
4AN	59+35.52	-27.63	568.29	568.46
4AO	59+45.67	-27.72	567.98	568.11
4AP	59+55.83	-27.77	567.66	567.76
4AQ	59+65.99	-27.79	567.35	567.40
℄ BRG. E. ABUT. WB	59+71.04	-27.79	567.19	567.22
℄ EXP. JT.	59+72.39	-27.79	567.15	567.17
BK E. ABUT. WB	59+74.55	-27.78	567.09	567.11

BEAM W7

Location	Station	Offset	Theoretical Grade Elevations	Theoretical Grade Elevations Adjusted for Dead Load Deflection and Grinding
℄ PIER 7 WB	55+10.88	-14.13	582.95	582.97
℄ E BRG. PIER 7 WB	55+12.08	-14.13	582.91	582.93
4A	55+22.08	-14.13	582.52	582.60
4B	55+32.08	-14.13	582.16	582.29
4C	55+42.08	-14.13	581.80	581.97
4D	55+52.08	-14.13	581.45	581.66
4E	55+62.08	-14.13	581.12	581.35
4F	55+72.08	-14.13	580.78	581.03
4G	55+82.08	-14.13	580.44	580.69
4H	55+92.08	-14.13	580.10	580.36
4I	56+02.08	-14.13	579.77	580.02
4J	56+12.08	-14.13	579.43	579.66
4K	56+22.08	-14.13	579.10	579.31
4L	56+32.08	-14.13	578.78	578.95
4M	56+42.08	-14.13	578.45	578.58
4N	56+52.08	-14.13	578.12	578.21
℄ W BRG PIER 8 WB	56+63.42	-14.13	577.75	577.77
℄ PIER 8 WB	56+64.55	-14.13	577.72	577.74
℄ E BRG PIER 8 WB	56+65.67	-14.12	577.68	577.70
4O	56+75.67	-14.25	577.36	577.44
4P	56+85.67	-14.38	577.04	577.18
4Q	56+95.67	-14.51	576.71	576.91
4R	57+05.67	-14.63	576.38	576.61
4S	57+15.67	-14.76	576.06	576.32
4T	57+25.67	-14.89	575.73	576.02
4U	57+35.66	-15.02	575.41	575.70
4V	57+45.66	-15.14	575.07	575.37
4W	57+55.66	-15.27	574.75	575.04
4X	57+65.66	-15.40	574.42	574.70
4Y	57+75.66	-15.53	574.10	574.35
4Z	57+85.66	-15.66	573.77	573.98
4AA	57+95.66	-15.77	573.44	573.61
4AB	58+05.67	-15.85	573.11	573.23
4AC	58+15.78	-15.91	572.78	572.84
℄ W BRG PIER 9 WB	58+21.59	-15.93	572.59	572.61
℄ PIER 9 WB	58+22.73	-15.93	572.55	572.57
℄ E BRG PIER 9 WB	58+23.87	-15.95	572.52	572.54
4AD	58+33.98	-16.30	572.18	572.25
4AE	58+44.09	-16.62	571.83	571.95
4AF	58+54.20	-16.90	571.50	571.65
4AG	58+64.32	-17.16	571.15	571.34
4AH	58+74.44	-17.39	570.81	571.02
4AI	58+84.56	-17.59	570.47	570.69
4AJ	58+94.68	-17.75	570.14	570.36
4AK	59+04.80	-17.89	569.80	570.02
4AL	59+14.93	-17.99	569.46	569.68
4AM	59+25.05	-18.07	569.13	569.33
4AN	59+35.18	-18.11	568.80	568.97
4AO	59+45.30	-18.13	568.49	568.63
4AP	59+55.43	-18.11	568.18	568.28
4AQ	59+65.55	-18.07	567.87	567.92
℄ BRG. E. ABUT. WB	59+71.08	-18.03	567.70	567.72
℄ EXP. JT.	59+72.43	-18.02	567.66	567.68
BK E. ABUT. WB	59+74.59	-18.00	567.60	567.62

NOTES:

1. All Elevations and Offsets are in feet.
2. Offsets are measured with respect to the I-80 WB PGL. Negative offsets are left and positive are right of the PGL.

MODEL: Default
FILE NAME: pw://transystems-pw.bentley.com:transyscorp-pw1-hosted/Documents/Projects_2018/CH401/401180022/03-WSP/CAD/62R23-RB-1/Sheets/Structural/0998309-62R23-S257-DEW406.dgn

WSP USA Inc.
30 N. LASALLE STREET
SUITE 4200
CHICAGO, IL 60602
TEL: (312) 782-8150
FAX: (312) 782-1684

USER NAME = USSJ696614	DESIGNED - LAS	REVISED -	
	CHECKED - PJL	REVISED -	
PLOT SCALE = 0.167 ' / in.	DRAWN - GM	REVISED -	
PLOT DATE = 11/5/2025	CHECKED - LAS	REVISED -	

STATE OF ILLINOIS
DEPARTMENT OF TRANSPORTATION

TOP OF SLAB ELEVATIONS 4 - UNIT 4 WB
STRUCTURE NUMBER 099-8309 WB AND 099-8325 EB

SHEET S-85 OF S-333 SHEETS

F.A.I RTE.	SECTION	COUNTY	TOTAL SHEETS	SHEET NO.
I-80	FAI 80 21 STRUCTURE 2	WILL	1230	666
		CONTRACT NO. 62R23		
	ILLINOIS	FED. AID PROJECT		

NORTH EDGE OF SOUTH LANE - WB

Location	Station	Offset	Theoretical Grade Elevations	Theoretical Grade Elevations Adjusted for Dead Load Deflection and Grinding
℄ PIER 7 WB	55+10.88	-12.00	582.92	582.94
℄ E BRG. PIER 7 WB	55+12.08	-12.00	582.87	582.89
4A	55+22.08	-12.00	582.51	582.59
4B	55+32.08	-12.00	582.15	582.28
4C	55+42.08	-12.00	581.80	581.97
4D	55+52.08	-12.00	581.46	581.66
4E	55+62.08	-12.00	581.13	581.36
4F	55+72.08	-12.00	580.79	581.04
4G	55+82.08	-12.00	580.46	580.72
4H	55+92.08	-12.00	580.13	580.38
4I	56+02.08	-12.00	579.79	580.04
4J	56+12.08	-12.00	579.46	579.69
4K	56+22.08	-12.00	579.14	579.35
4L	56+32.08	-12.00	578.81	578.99
4M	56+42.08	-12.00	578.49	578.62
4N	56+52.08	-12.00	578.17	578.25
℄ W BRG PIER 8 WB	56+63.42	-12.00	577.80	577.83
℄ PIER 8 WB	56+64.55	-12.00	577.77	577.79
℄ E BRG PIER 8 WB	56+65.67	-12.00	577.73	577.75
4O	56+75.67	-12.00	577.41	577.50
4P	56+85.67	-12.00	577.09	577.24
4Q	56+95.67	-12.00	576.77	576.97
4R	57+05.67	-12.00	576.45	576.69
4S	57+15.67	-12.00	576.13	576.40
4T	57+25.67	-12.00	575.81	576.10
4U	57+35.67	-12.00	575.49	575.79
4V	57+45.67	-12.00	575.17	575.47
4W	57+55.67	-12.00	574.85	575.15
4X	57+65.67	-12.00	574.53	574.81
4Y	57+75.67	-12.00	574.21	574.47
4Z	57+85.67	-12.00	573.89	574.11
4AA	57+95.67	-12.00	573.57	573.75
4AB	58+05.68	-12.00	573.25	573.38
4AC	58+15.78	-12.00	572.93	572.99
℄ W BRG PIER 9 WB	58+21.57	-12.00	572.75	572.77
℄ PIER 9 WB	58+22.71	-12.00	572.71	572.73
℄ E BRG PIER 9 WB	58+23.85	-12.00	572.67	572.69
4AD	58+33.95	-12.00	572.35	572.42
4AE	58+44.06	-12.00	572.03	572.14
4AF	58+54.16	-12.00	571.70	571.86
4AG	58+64.27	-12.00	571.38	571.57
4AH	58+74.37	-12.00	571.06	571.26
4AI	58+84.48	-12.00	570.73	570.96
4AJ	58+94.58	-12.00	570.41	570.64
4AK	59+04.69	-12.00	570.09	570.31
4AL	59+14.80	-12.00	569.76	569.98
4AM	59+24.90	-12.00	569.44	569.64
4AN	59+35.01	-12.00	569.12	569.29
4AO	59+45.11	-12.00	568.81	568.95
4AP	59+55.22	-12.00	568.50	568.60
4AQ	59+65.33	-12.00	568.19	568.24
℄ BRG. E. ABUT. WB	59+71.11	-12.00	568.01	568.03
℄ EXP. JT.	59+72.46	-12.00	567.97	567.99
BK E. ABUT. WB	59+74.61	-12.00	567.91	567.93

BEAM W8

Location	Station	Offset	Theoretical Grade Elevations	Theoretical Grade Elevations Adjusted for Dead Load Deflection and Grinding
℄ PIER 7 WB	55+10.88	-6.04	582.83	582.85
℄ E BRG. PIER 7 WB	55+12.08	-6.04	582.78	582.81
4A	55+22.08	-6.04	582.46	582.55
4B	55+32.08	-6.04	582.15	582.28
4C	55+42.08	-6.04	581.79	581.97
4D	55+52.08	-6.04	581.48	581.70
4E	55+62.08	-6.04	581.15	581.39
4F	55+72.08	-6.04	580.82	581.08
4G	55+82.08	-6.04	580.51	580.78
4H	55+92.08	-6.04	580.20	580.47
4I	56+02.08	-6.04	579.87	580.13
4J	56+12.08	-6.04	579.55	579.80
4K	56+22.08	-6.04	579.23	579.45
4L	56+32.08	-6.04	578.91	579.10
4M	56+42.08	-6.04	578.61	578.75
4N	56+52.08	-6.04	578.29	578.37
℄ W BRG PIER 8 WB	56+63.42	-6.04	577.94	577.96
℄ PIER 8 WB	56+64.55	-6.04	577.90	577.93
℄ E BRG PIER 8 WB	56+65.67	-6.04	577.87	577.89
4O	56+75.67	-6.13	577.55	577.64
4P	56+85.67	-6.21	577.23	577.38
4Q	56+95.67	-6.30	576.92	577.11
4R	57+05.67	-6.38	576.61	576.84
4S	57+15.67	-6.47	576.29	576.56
4T	57+25.67	-6.55	575.97	576.26
4U	57+35.67	-6.64	575.65	575.95
4V	57+45.67	-6.72	575.34	575.65
4W	57+55.67	-6.81	575.02	575.32
4X	57+65.67	-6.89	574.70	574.98
4Y	57+75.67	-6.98	574.38	574.64
4Z	57+85.67	-7.06	574.08	574.29
4AA	57+95.67	-7.13	573.76	573.93
4AB	58+05.67	-7.18	573.44	573.56
4AC	58+15.76	-7.19	573.12	573.18
℄ W BRG PIER 9 WB	58+21.56	-7.18	572.94	572.96
℄ PIER 9 WB	58+22.69	-7.18	572.90	572.93
℄ E BRG PIER 9 WB	58+23.83	-7.19	572.87	572.89
4AD	58+33.91	-7.47	572.54	572.61
4AE	58+44.00	-7.72	572.21	572.33
4AF	58+54.09	-7.94	571.88	572.05
4AG	58+64.17	-8.13	571.56	571.75
4AH	58+74.27	-8.29	571.23	571.45
4AI	58+84.36	-8.41	570.91	571.14
4AJ	58+94.45	-8.51	570.58	570.82
4AK	59+04.55	-8.58	570.26	570.50
4AL	59+14.64	-8.62	569.94	570.17
4AM	59+24.74	-8.62	569.62	569.83
4AN	59+34.83	-8.60	569.30	569.48
4AO	59+44.93	-8.55	569.00	569.14
4AP	59+55.02	-8.46	568.69	568.80
4AQ	59+65.12	-8.35	568.39	568.44
℄ BRG. E. ABUT. WB	59+71.13	-8.27	568.21	568.23
℄ EXP. JT.	59+72.48	-8.25	568.17	568.19
BK E. ABUT. WB	59+74.62	-8.21	568.10	568.12

PGL I-80 WB

Location	Station	Offset	Theoretical Grade Elevations	Theoretical Grade Elevations Adjusted for Dead Load Deflection and Grinding
℄ PIER 7 WB	55+10.88	0.00	582.75	582.77
℄ E BRG. PIER 7 WB	55+12.08	0.00	582.71	582.73
4A	55+22.08	0.00	582.40	582.48
4B	55+32.08	0.00	582.10	582.23
4C	55+42.08	0.00	581.79	581.97
4D	55+52.08	0.00	581.48	581.70
4E	55+62.08	0.00	581.18	581.42
4F	55+72.08	0.00	580.87	581.13
4G	55+82.08	0.00	580.56	580.83
4H	55+92.08	0.00	580.26	580.53
4I	56+02.08	0.00	579.95	580.21
4J	56+12.08	0.00	579.64	579.89
4K	56+22.08	0.00	579.34	579.56
4L	56+32.08	0.00	579.03	579.21
4M	56+42.08	0.00	578.72	578.86
4N	56+52.08	0.00	578.42	578.51
℄ W BRG PIER 8 WB	56+63.42	0.00	578.07	578.09
℄ PIER 8 WB	56+64.55	0.00	578.04	578.06
℄ E BRG PIER 8 WB	56+65.67	0.00	578.00	578.02
4O	56+75.67	0.00	577.69	577.78
4P	56+85.67	0.00	577.39	577.53
4Q	56+95.67	0.00	577.08	577.27
4R	57+05.67	0.00	576.78	577.00
4S	57+15.67	0.00	576.47	576.73
4T	57+25.67	0.00	576.16	576.44
4U	57+35.67	0.00	575.86	576.14
4V	57+45.67	0.00	575.55	575.84
4W	57+55.67	0.00	575.24	575.53
4X	57+65.67	0.00	574.94	575.20
4Y	57+75.67	0.00	574.63	574.88
4Z	57+85.67	0.00	574.32	574.53
4AA	57+95.67	0.00	574.02	574.18
4AB	58+05.67	0.00	573.71	573.83
4AC	58+15.74	0.00	573.40	573.46
℄ W BRG PIER 9 WB	58+21.53	0.00	573.22	573.24
℄ PIER 9 WB	58+22.66	0.00	573.19	573.21
℄ E BRG PIER 9 WB	58+23.79	0.00	573.15	573.17
4AD	58+33.86	0.00	572.84	572.92
4AE	58+43.93	0.00	572.54	572.66
4AF	58+53.99	0.00	572.23	572.39
4AG	58+64.06	0.00	571.92	572.11
4AH	58+74.13	0.00	571.61	571.82
4AI	58+84.20	0.00	571.30	571.53
4AJ	58+94.26	0.00	570.99	571.23
4AK	59+04.33	0.00	570.68	570.92
4AL	59+14.40	0.00	570.38	570.60
4AM	59+24.47	0.00	570.07	570.28
4AN	59+34.53	0.00	569.76	569.94
4AO	59+44.60	0.00	569.45	569.60
4AP	59+54.67	0.00	569.14	569.25
4AQ	59+64.74	0.00	568.83	568.89
℄ BRG. E. ABUT. WB	59+71.17	0.00	568.64	568.66
℄ EXP. JT.	59+72.51	0.00	568.59	568.61
BK E. ABUT. WB	59+74.65	0.00	568.53	568.55

NOTES:

1. All Elevations and Offsets are in feet.
2. Offsets are measured with respect to the I-80 WB PGL. Negative offsets are left and positive are right of the PGL.

BEAM W9

Location	Station	Offset	Theoretical Grade Elevations	Theoretical Grade Elevations Adjusted for Dead Load Deflection and Grinding
℄ PIER 7 WB	55+10.88	2.04	582.71	582.73
℄ E BRG. PIER 7 WB	55+12.08	2.04	582.67	582.69
4A	55+22.08	2.04	582.36	582.44
4B	55+32.08	2.04	582.06	582.19
4C	55+42.08	2.04	581.75	581.93
4D	55+52.08	2.04	581.44	581.66
4E	55+62.08	2.04	581.14	581.38
4F	55+72.08	2.04	580.83	581.09
4G	55+82.08	2.04	580.52	580.79
4H	55+92.08	2.04	580.22	580.49
4I	56+02.08	2.04	579.91	580.17
4J	56+12.08	2.04	579.60	579.85
4K	56+22.08	2.04	579.30	579.51
4L	56+32.08	2.04	578.99	579.17
4M	56+42.08	2.04	578.68	578.82
4N	56+52.08	2.04	578.38	578.46
℄ W BRG PIER 8 WB	56+63.42	2.04	578.03	578.05
℄ PIER 8 WB	56+64.55	2.04	578.00	578.02
℄ E BRG PIER 8 WB	56+65.67	2.04	577.96	577.98
4O	56+75.67	2.00	577.65	577.74
4P	56+85.67	1.96	577.35	577.49
4Q	56+95.67	1.91	577.04	577.23
4R	57+05.67	1.87	576.74	576.96
4S	57+15.67	1.83	576.43	576.69
4T	57+25.67	1.79	576.13	576.40
4U	57+35.67	1.74	575.82	576.11
4V	57+45.67	1.70	575.51	575.81
4W	57+55.67	1.66	575.21	575.49
4X	57+65.67	1.62	574.90	575.17
4Y	57+75.67	1.57	574.60	574.84
4Z	57+85.67	1.53	574.29	574.50
4AA	57+95.67	1.50	573.99	574.15
4AB	58+05.67	1.50	573.68	573.80
4AC	58+15.73	1.53	573.37	573.43
℄ W BRG PIER 9 WB	58+21.52	1.56	573.19	573.21
℄ PIER 9 WB	58+22.66	1.57	573.16	573.18
℄ E BRG PIER 9 WB	58+23.79	1.57	573.12	573.14
4AD	58+33.85	1.36	572.82	572.89
4AE	58+43.91	1.18	572.51	572.63
4AF	58+53.97	1.03	572.21	572.37
4AG	58+64.03	0.91	571.90	572.09
4AH	58+74.09	0.82	571.60	571.81
4AI	58+84.16	0.76	571.29	571.52
4AJ	58+94.22	0.73	570.98	571.22
4AK	59+04.29	0.73	570.67	570.91
4AL	59+14.35	0.76	570.36	570.59
4AM	59+24.42	0.82	570.05	570.26
4AN	59+34.48	0.91	569.74	569.93
4AO	59+44.55	1.03	569.43	569.58
4AP	59+54.61	1.18	569.12	569.23
4AQ	59+64.68	1.36	568.81	568.86
℄ BRG. E. ABUT. WB	59+71.18	1.50	568.61	568.63
℄ EXP. JT.	59+72.52	1.52	568.56	568.58
BK E. ABUT. WB	59+74.66	1.57	568.50	568.52

BEAM W10

Location	Station	Offset	Theoretical Grade Elevations	Theoretical Grade Elevations Adjusted for Dead Load Deflection and Grinding
℄ PIER 7 WB	55+10.88	10.13	582.54	582.57
℄ E BRG. PIER 7 WB	55+12.08	10.13	582.51	582.53
4A	55+22.08	10.13	582.20	582.28
4B	55+32.08	10.13	581.89	582.02
4C	55+42.08	10.13	581.59	581.76
4D	55+52.08	10.13	581.28	581.49
4E	55+62.08	10.13	580.97	581.21
4F	55+72.08	10.13	580.67	580.92
4G	55+82.08	10.13	580.36	580.62
4H	55+92.08	10.13	580.06	580.32
4I	56+02.08	10.13	579.75	580.00
4J	56+12.08	10.13	579.44	579.68
4K	56+22.08	10.13	579.14	579.34
4L	56+32.08	10.13	578.83	579.01
4M	56+42.08	10.13	578.52	578.66
4N	56+52.08	10.13	578.22	578.30
℄ W BRG PIER 8 WB	56+63.42	10.13	577.87	577.89
℄ PIER 8 WB	56+64.55	10.13	577.83	577.85
℄ E BRG PIER 8 WB	56+65.67	10.13	577.80	577.82
4O	56+75.67	10.13	577.49	577.57
4P	56+85.67	10.13	577.19	577.32
4Q	56+95.67	10.13	576.88	577.06
4R	57+05.67	10.13	576.57	576.79
4S	57+15.67	10.13	576.27	576.51
4T	57+25.67	10.13	575.96	576.23
4U	57+35.67	10.13	575.65	575.93
4V	57+45.67	10.13	575.35	575.63
4W	57+55.67	10.13	575.04	575.32
4X	57+65.67	10.13	574.73	574.99
4Y	57+75.67	10.13	574.43	574.66
4Z	57+85.67	10.13	574.12	574.32
4AA	57+95.67	10.14	573.81	573.98
4AB	58+05.67	10.18	573.51	573.62
4AC	58+15.71	10.25	573.20	573.25
℄ W BRG PIER 9 WB	58+21.49	10.31	573.02	573.04
℄ PIER 9 WB	58+22.62	10.32	572.98	573.00
℄ E BRG PIER 9 WB	58+23.75	10.33	572.95	572.97
4AD	58+33.78	10.19	572.64	572.72
4AE	58+43.81	10.08	572.34	572.46
4AF	58+53.85	9.99	572.03	572.19
4AG	58+63.88	9.94	571.73	571.92
4AH	58+73.92	9.92	571.42	571.63
4AI	58+83.96	9.92	571.11	571.34
4AJ	58+93.99	9.96	570.80	571.04
4AK	59+04.03	10.03	570.49	570.73
4AL	59+14.06	10.13	570.18	570.41
4AM	59+24.10	10.25	569.87	570.08
4AN	59+34.13	10.41	569.56	569.75
4AO	59+44.17	10.60	569.25	569.40
4AP	59+54.20	10.82	568.94	569.05
4AQ	59+64.23	11.07	568.63	568.68
℄ BRG. E. ABUT. WB	59+71.22	11.26	568.41	568.43
℄ EXP. JT.	59+72.56	11.30	568.37	568.39
BK E. ABUT. WB	59+74.69	11.36	568.30	568.32

INSIDE FACE OF SOUTH PARAPET - WB

Location	Station	Offset	Theoretical Grade Elevations	Theoretical Grade Elevations Adjusted for Dead Load Deflection and Grinding
℄ PIER 7 WB	55+10.88	12.00	582.51	582.53
℄ E BRG. PIER 7 WB	55+12.08	12.00	582.47	582.49
4A	55+22.08	12.00	582.16	582.24
4B	55+32.08	12.00	581.86	581.99
4C	55+42.08	12.00	581.55	581.73
4D	55+52.08	12.00	581.25	581.45
4E	55+62.08	12.00	580.94	581.17
4F	55+72.08	12.00	580.63	580.89
4G	55+82.08	12.00	580.33	580.59
4H	55+92.08	12.00	580.02	580.28
4I	56+02.08	12.00	579.71	579.97
4J	56+12.08	12.00	579.41	579.64
4K	56+22.08	12.00	579.10	579.31
4L	56+32.08	12.00	578.79	578.97
4M	56+42.08	12.00	578.49	578.62
4N	56+52.08	12.00	578.18	578.26
℄ W BRG PIER 8 WB	56+63.42	12.00	577.83	577.85
℄ PIER 8 WB	56+64.55	12.00	577.80	577.82
℄ E BRG PIER 8 WB	56+65.67	12.00	577.76	577.78
4O	56+75.67	12.00	577.46	577.54
4P	56+85.67	12.00	577.15	577.28
4Q	56+95.67	12.00	576.84	577.03
4R	57+05.67	12.00	576.54	576.75
4S	57+15.67	12.00	576.23	576.48
4T	57+25.67	12.00	575.92	576.19
4U	57+35.67	12.00	575.62	575.90
4V	57+45.67	12.00	575.31	575.59
4W	57+55.67	12.00	575.00	575.28
4X	57+65.67	12.00	574.70	574.96
4Y	57+75.67	12.00	574.39	574.63
4Z	57+85.67	12.00	574.08	574.29
4AA	57+95.67	12.00	573.78	573.94
4AB	58+05.67	12.00	573.47	573.59
4AC	58+15.70	12.00	573.16	573.22
℄ W BRG PIER 9 WB	58+21.48	12.00	572.99	573.01
℄ PIER 9 WB	58+22.61	12.00	572.95	572.97
℄ E BRG PIER 9 WB	58+23.74	12.00	572.92	572.94
4AD	58+33.77	12.00	572.61	572.68
4AE	58+43.80	12.00	572.30	572.42
4AF	58+53.83	12.00	571.99	572.15
4AG	58+63.86	12.00	571.69	571.88
4AH	58+73.89	12.00	571.38	571.59
4AI	58+83.92	12.00	571.07	571.30
4AJ	58+93.94	12.00	570.76	571.00
4AK	59+03.97	12.00	570.46	570.69
4AL	59+14.00	12.00	570.15	570.38
4AM	59+24.03	12.00	569.84	570.05
4AN	59+34.06	12.00	569.53	569.72
4AO	59+44.09	12.00	569.23	569.38
4AP	59+54.13	12.00	568.92	569.03
4AQ	59+64.16	12.00	568.61	568.67
℄ BRG. E. ABUT. WB	59+71.23	12.00	568.39	568.41
℄ EXP. JT.	59+72.56	12.00	568.35	568.37
BK E. ABUT. WB	59+74.70	12.00	568.29	568.31

NOTES:

1. All Elevations and Offsets are in feet.
2. Offsets are measured with respect to the I-80 WB PGL. Negative offsets are left and positive are right of the PGL.

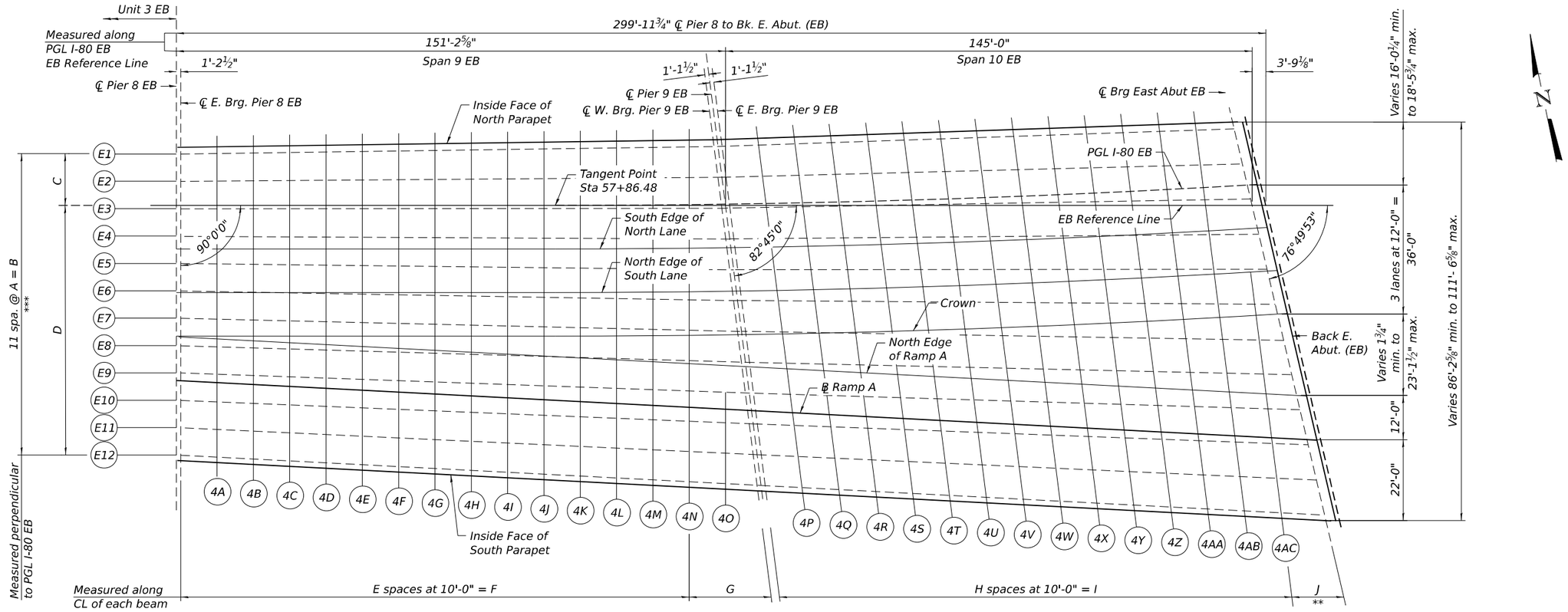

** See Top of Slab Dimensions Table on sheet S-89

*** See Table of Beam Spacing on sheet S-89

PLAN - UNIT 4 EB

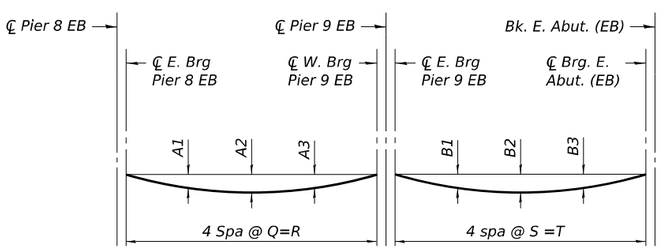

DEAD LOAD DEFLECTION DIAGRAM

(Includes weight of concrete, excluding beams)

Note:

The above deflections are not to be used in the field if the engineer is working from the grade elevations adjusted for dead load deflections and grinding as shown on sheets S-90 to S-96.

Beam	DEAD LOAD DEFLECTIONS (INCHES)					
	Span 9 EB			Span 10 EB		
	A1	A2	A3	B1	B2	B3
E1	1 1/2	2	1 3/8	1 1/4	1 3/4	1 1/4
E2	1 1/2	2 1/8	1 1/2	1 3/8	1 7/8	1 3/8
E3	1 1/2	2 1/8	1 1/2	1 3/8	1 7/8	1 3/8
E4	1 5/8	2 1/8	1 5/8	1 3/8	1 7/8	1 3/8
E5	1 5/8	2 1/8	1 5/8	1 3/8	1 7/8	1 3/8
E6	1 5/8	2 1/4	1 5/8	1 3/8	1 7/8	1 3/8
E7	1 5/8	2 1/4	1 5/8	1 5/8	2 1/8	1 5/8
E8	1 5/8	2 1/4	1 5/8	1 1/2	2	1 1/2
E9	1 3/4	2 3/8	1 3/4	1 5/8	2 1/8	1 5/8
E10	2	2 5/8	1 7/8	1 5/8	2 1/4	1 3/4
E11	2	2 3/4	2	1 3/4	2 3/8	1 7/8
E12	2 3/8	3 1/8	2 1/4	1 7/8	2 5/8	2

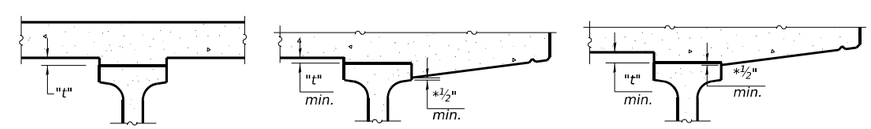

* Variable (not less ½")

At Minimum Fillet

At Maximum Fillet

INMTERIOR BEAMS

EXTERIOR BEAMS

FILLET HEIGHTS

To determine "t": After all precast prestressed beams have been erected, elevations of the top flanges of the beams shall be taken at intervals shown. These elevations subtracted from the "Theoretical Grade Elevations Adjusted for Dead Load Deflection and Grinding" shown on sheets S-90 to S-96, minus the initial slab thickness prior to grinding, equals the fillet heights "t" above top flange of beams.

The slab is to be ground after curing to achieve smoothness, but the slab is not to be ground to elevations below the "Theoretical Grade Elevations" shown on sheets S-90 to S-96. For grinding the deck, see Special Provisions.

NOTES:

1. Up to ¼ inch to be ground off the bridge deck and bridge approach slabs. The Profile Grade shows the final grade after grinding.

TABLE OF BEAM LENGTHS

LOCATION	Q	R	S	T
Beam E1	36' - 8 1/2" (-)	146' - 9 15/16"	35' - 3 1/4"	141' - 1"
Beam E2	36' - 11 11/16"	147' - 10 3/4"	35' - 6 11/16"	142' - 2 3/4"
Beam E3	37' - 2 7/8" (+)	148' - 11 5/8"	35' - 10 1/8" (+)	143' - 4 5/8"
Beam E4	37' - 6 1/8" (+)	150' - 0 9/16"	36' - 1 5/8" (+)	144' - 6 5/8"
Beam E5	37' - 9 3/8" (+)	151' - 1 9/16"	36' - 5 3/16"	145' - 8 3/4"
Beam E6	38' - 0 5/8" (+)	152' - 2 11/16"	36' - 8 3/4"	146' - 11"
Beam E7	38' - 4" (-)	153' - 3 13/16"	37' - 0 1/2"(-)	148' - 2 1/8"
Beam E8	38' - 7 1/4" (+)	154' 5 1/16"	37' - 4" (-)	149' - 3 13/16"
Beam E9	38' - 10 5/8" (-)	155' - 6 3/8"	37' - 7 5/8" (-)	150' - 6 3/8"
Beam E10	39' - 1 7/8" (+)	156' - 7 11/16"	37' - 11 1/4" (+)	151'- 9 1/16"
Beam E11	39' - 5 1/4" (+)	157' - 9 1/8"	38' - 3" (-)	152' - 11 13/16"
Beam E12	39' - 8 5/8" (+)	158' - 10 9/16"	38' - 6 5/8" (+)	154' - 2 11/16"

TABLE OF BEAM LENGTHS

LOCATION	E	F	G	H	I	J
Inside Face of North Parapet	14	140'-0"	6' - 7 1/16"	13	130'-0"	10'-10 9/16"
Beam E1	14	140'-0"	6' - 9 15/16"	13	130'-0"	11' - 1"
Beam E2	14	140'-0"	7' - 10 3/4"	13	130'-0"	12' - 2 3/4"
PGL I-80 EB	14	140'-0"	8' - 10"	13	130'-0"	12' - 8 7/16"
Beam E3	14	140'-0"	8' - 11 5/8"	13	130'-0"	13' - 4 5/8"
Beam E4	14	140'-0"	10' - 0 9/16"	13	130'-0"	14' - 6 5/8"
South Edge of North Lane	14	140'-0"	10' - 4 5/16"	13	130'-0"	13' - 11 1/2"
Beam E5	14	140'-0"	11' - 1 9/16"	14	140'-0"	5' - 8 3/4"
Beam E6	14	140'-0"	12' - 2 11/16"	14	140'-0"	6' - 11"
North Edge of South Lane	14	140'-0"	11' - 10 9/16"	14	140'-0"	5' - 2 9/16"
Beam E17	14	140'-0"	13' - 3 13/16"	14	140'-0"	8' - 2 1/8"
Crown	14	140'-0"	13' - 4 13/16"	14	140'-0"	6' - 5 5/8"
North Edge of Ramp	14	140'-0"	14' - 8 9/16"	14	140'-0"	10' - 8 1/16
Beam E8	14	140'-0"	14' - 5 1/16"	14	140'-0"	9' - 3 13/16"
Beam E9	15	150'-0"	5' - 6 3/8"	14	140'-0"	10' - 6 3/8"
Ramp A	15	150'-0"	6' - 3 1/16"	14	140'-0"	11' - 11 13/16"
Beam E10	15	150'-0"	6' - 7 11/16"	14	140'-0"	11' - 9 1/16"
Beam E11	15	150'-0"	7' - 9 1/8"	14	140'-0"	12'- 11 13/16"
Beam E12	15	150'-0"	8' 10 9/16"	14	140'-0"	14'- 2 11/16"
Inside Face of South Parapet	15	150'-0"	9' - 0 7/8"	14	140'-0"	14' - 4 11/16"

TABLE OF BEAM SPACING

LOCATION	A	B	C	D
℄ E BRG. PIER 8 EB	7'-6 1/2"(-)	82'-11"	14'-2 1/8"	68'- 8 7/8"
℄ W BRG PIER 9 EB	8' - 6" (-)	93'-5 7/8"	15'-11 3/8"	77' - 6 1/2"
℄ E BRG PIER 9 EB	8' - 6 1/4" (-)	93'-8 1/8"	15' - 11 3/4"	77' - 8 3/8"
℄ BRG. E. ABUT. EB	9' - 9 1/2"	107' - 8 1/2"	15' - 7 7/8"	92' 0 5/8"

NOTES:

1. Up to ¼ inch to be ground off the bridge deck and bridge approach slabs. The Profile Grade shows the final grade after grinding.

WSP USA Inc.
30 N. LASALLE STREET
SUITE 4200
CHICAGO, IL 60602
TEL: (312) 782-8150
FAX: (312) 782-1684

USER NAME = USSJ696614	DESIGNED - LAS	REVISED -	
	CHECKED - PJL	REVISED -	
PLOT SCALE = 32:0.0000 ':" / in.	DRAWN - GM	REVISED -	
PLOT DATE = 11/5/2025	CHECKED - LAS	REVISED -	

STATE OF ILLINOIS
DEPARTMENT OF TRANSPORTATION

TOP OF SLAB ELEVATIONS PLAN 2 - UNIT 4 EB
STRUCTURE NUMBER 099-8309 WB AND 099-8325 EB

SHEET S-89 OF S-333 SHEETS

F.A.I RTE.	SECTION	COUNTY	TOTAL SHEETS	SHEET NO.
I-80	FAI 80 21 STRUCTURE 2	WILL	1230	670
		CONTRACT NO. 62R23		
	ILLINOIS	FED. AID PROJECT		

INSIDE FACE OF NORTH PARAPET - EB

Location	Station	Offset	Theoretical Grade Elevations	Theoretical Grade Elevations Adjusted for Dead Load Deflection and Grinding
℄ PIER 8 EB	56+82.12	-16.02	577.13	577.15
℄ E BRG. PIER 8 EB	56+83.33	-16.04	577.09	577.11
4A	56+93.33	-16.18	576.76	576.82
4B	57+03.33	-16.32	576.43	576.53
4C	57+13.33	-16.46	576.10	576.23
4D	57+23.33	-16.60	575.77	575.92
4E	57+33.32	-16.75	575.44	575.60
4F	57+43.32	-16.89	575.10	575.28
4G	57+53.32	-17.03	574.77	574.95
4H	57+63.32	-17.17	574.44	574.62
4I	57+73.32	-17.31	574.10	574.28
4J	57+83.32	-17.46	573.77	573.93
4K	57+93.32	-17.59	573.44	573.58
4L	58+03.32	-17.69	573.10	573.22
4M	58+13.31	-17.77	572.77	572.85
4N	58+23.30	-17.81	572.44	572.49
4O	-	-	-	-
℄ W BRG PIER 9 EB	58+29.88	-17.82	572.22	572.24
℄ PIER 9 EB	58+31.01	-17.82	572.18	572.21
℄ E BRG PIER 9 EB	58+32.14	-17.85	572.15	572.17
4P	58+42.13	-18.03	571.81	571.86
4Q	58+52.12	-18.18	571.47	571.56
4R	58+62.11	-18.30	571.14	571.25
4S	58+72.10	-18.39	570.80	570.94
4T	58+82.09	-18.45	570.47	570.62
4U	58+92.09	-18.48	570.14	570.30
4V	59+02.08	-18.47	569.81	569.97
4W	59+12.07	-18.44	569.49	569.65
4X	59+22.07	-18.37	569.19	569.34
4Y	59+32.06	-18.27	568.88	569.02
4Z	59+42.06	-18.14	568.59	568.70
4AA	59+52.05	-17.98	568.29	568.38
4AB	59+62.04	-17.79	567.99	568.05
4AC	-	-	-	-
℄ BRG. E. ABUT. EB	59+72.83	-17.54	567.67	567.69
℄ EXP. JT.	59+74.48	-17.50	567.62	567.65
BK E. ABUT. EB	59+76.64	-17.51	567.56	567.58

BEAM E1

Location	Station	Offset	Theoretical Grade Elevations	Theoretical Grade Elevations Adjusted for Dead Load Deflection and Grinding
℄ PIER 8 EB	56+82.12	-14.14	577.18	577.20
℄ E BRG. PIER 8 EB	56+83.33	-14.16	577.14	577.16
4A	56+93.33	-14.30	576.80	576.87
4B	57+03.33	-14.45	576.48	576.58
4C	57+13.33	-14.59	576.15	576.27
4D	57+23.33	-14.73	575.82	575.97
4E	57+33.32	-14.87	575.49	575.65
4F	57+43.32	-15.01	575.16	575.34
4G	57+53.32	-15.15	574.83	575.01
4H	57+63.32	-15.30	574.50	574.68
4I	57+73.32	-15.44	574.16	574.34
4J	57+83.32	-15.58	573.84	574.00
4K	57+93.32	-15.71	573.50	573.64
4L	58+03.32	-15.82	573.17	573.29
4M	58+13.30	-15.89	572.85	572.93
4N	58+23.29	-15.94	572.52	572.57
4O	-	-	-	-
℄ W BRG PIER 9 EB	58+30.10	-15.95	572.30	572.32
℄ PIER 9 EB	58+31.23	-15.96	572.26	572.28
℄ E BRG PIER 9 EB	58+32.36	-15.98	572.22	572.24
4P	58+42.34	-16.16	571.88	571.94
4Q	58+52.33	-16.31	571.55	571.64
4R	58+62.31	-16.43	571.22	571.33
4S	58+72.30	-16.52	570.89	571.02
4T	58+82.29	-16.58	570.55	570.70
4U	58+92.27	-16.60	570.23	570.38
4V	59+02.26	-16.60	569.90	570.06
4W	59+12.25	-16.56	569.58	569.74
4X	59+22.24	-16.49	569.28	569.43
4Y	59+32.23	-16.39	568.98	569.11
4Z	59+42.21	-16.26	568.68	568.79
4AA	59+52.20	-16.10	568.38	568.47
4AB	59+62.19	-15.91	568.08	568.14
4AC	-	-	-	-
℄ BRG. E. ABUT. EB	59+73.17	-15.66	567.76	567.78
℄ EXP. JT.	59+74.82	-15.62	567.71	567.73
BK E. ABUT. EB	59+76.98	-15.57	567.65	567.67

BEAM E2

Location	Station	Offset	Theoretical Grade Elevations	Theoretical Grade Elevations Adjusted for Dead Load Deflection and Grinding
℄ PIER 8 EB	56+82.12	-6.61	577.34	577.36
℄ E BRG. PIER 8 EB	56+83.33	-6.62	577.30	577.33
4A	56+93.33	-6.70	576.99	577.05
4B	57+03.33	-6.78	576.67	576.77
4C	57+13.33	-6.85	576.35	576.49
4D	57+23.33	-6.93	576.03	576.19
4E	57+33.33	-7.01	575.72	575.89
4F	57+43.33	-7.08	575.40	575.59
4G	57+53.33	-7.16	575.08	575.27
4H	57+63.33	-7.24	574.76	574.95
4I	57+73.33	-7.32	574.44	574.63
4J	57+83.33	-7.39	574.13	574.30
4K	57+93.33	-7.46	573.80	573.95
4L	58+03.33	-7.50	573.49	573.62
4M	58+13.29	-7.51	573.19	573.28
4N	58+23.25	-7.49	572.87	572.92
4O	-	-	-	-
℄ W BRG PIER 9 EB	58+31.11	-7.45	572.63	572.65
℄ PIER 9 EB	58+32.24	-7.44	572.59	572.61
℄ E BRG PIER 9 EB	58+33.37	-7.46	572.55	572.58
4P	58+43.32	-7.56	572.23	572.29
4Q	58+53.28	-7.62	571.92	572.01
4R	58+63.24	-7.65	571.59	571.71
4S	58+73.20	-7.65	571.29	571.43
4T	58+83.16	-7.62	570.97	571.12
4U	58+93.12	-7.56	570.66	570.82
4V	59+03.08	-7.47	570.33	570.51
4W	59+13.04	-7.34	570.04	570.20
4X	59+23.00	-7.19	569.74	569.90
4Y	59+32.96	-7.00	569.44	569.59
4Z	59+42.91	-6.78	569.15	569.28
4AA	59+52.87	-6.53	568.86	568.96
4AB	59+62.83	-6.26	568.57	568.63
4AC	-	-	-	-
℄ BRG. E. ABUT. EB	59+74.91	-5.87	568.22	568.24
℄ EXP. JT.	59+76.56	-5.82	568.17	568.19
BK E. ABUT. EB	59+78.72	-5.74	568.11	568.13

NOTES:

1. All Elevations and Offsets are in feet.
2. Offsets are measured with respect to the I-80 EB PGL. Negative offsets are left and positive are right of the PGL.

PGL I-80 EB

Location	Station	Offset	Theoretical Grade Elevations	Theoretical Grade Elevations Adjusted for Dead Load Deflection and Grinding
℄ PIER 8 EB	56+82.12	0.00	577.50	577.52
℄ E BRG. PIER 8 EB	56+83.33	0.00	577.46	577.48
4A	56+93.33	0.00	577.15	577.22
4B	57+03.33	0.00	576.85	576.95
4C	57+13.33	0.00	576.54	576.67
4D	57+23.33	0.00	576.23	576.39
4E	57+33.33	0.00	575.93	576.10
4F	57+43.33	0.00	575.62	575.81
4G	57+53.33	0.00	575.31	575.51
4H	57+63.33	0.00	575.01	575.20
4I	57+73.33	0.00	574.70	574.89
4J	57+83.33	0.00	574.39	574.57
4K	57+93.33	0.00	574.09	574.24
4L	58+03.33	0.00	573.78	573.91
4M	58+13.27	0.00	573.48	573.57
4N	58+23.21	0.00	573.17	573.23
4O	-	-	-	-
℄ W BRG PIER 9 EB	58+31.99	0.00	572.90	572.92
℄ PIER 9 EB	58+33.12	0.00	572.87	572.89
℄ E BRG PIER 9 EB	58+34.24	0.00	572.83	572.85
4P	58+44.18	0.00	572.53	572.59
4Q	58+54.11	0.00	572.22	572.32
4R	58+64.05	0.00	571.92	572.04
4S	58+73.98	0.00	571.62	571.76
4T	58+83.92	0.00	571.31	571.47
4U	58+93.86	0.00	571.01	571.17
4V	59+03.79	0.00	570.70	570.87
4W	59+13.73	0.00	570.40	570.57
4X	59+23.67	0.00	570.09	570.25
4Y	59+33.60	0.00	569.79	569.94
4Z	59+43.54	0.00	569.48	569.61
4AA	59+53.48	0.00	569.18	569.28
4AB	59+63.42	0.00	568.87	568.95
4AC	-	-	-	-
℄ BRG. E. ABUT. EB	59+75.95	0.00	568.49	568.51
℄ EXP. JT.	59+77.59	0.00	568.44	568.46
BK E. ABUT. EB	59+79.73	0.00	568.37	568.39

BEAM E3

Location	Station	Offset	Theoretical Grade Elevations	Theoretical Grade Elevations Adjusted for Dead Load Deflection and Grinding
℄ PIER 8 EB	56+82.12	0.92	577.52	577.54
℄ E BRG. PIER 8 EB	56+83.33	0.92	577.48	577.50
4A	56+93.33	0.90	577.18	577.24
4B	57+03.33	0.89	576.87	576.97
4C	57+13.33	0.88	576.56	576.70
4D	57+23.33	0.86	576.26	576.42
4E	57+33.33	0.85	575.95	576.13
4F	57+43.33	0.84	575.65	575.84
4G	57+53.33	0.82	575.34	575.53
4H	57+63.33	0.81	575.04	575.23
4I	57+73.33	0.80	574.73	574.92
4J	57+83.33	0.79	574.42	574.60
4K	57+93.33	0.78	574.12	574.27
4L	58+03.33	0.80	573.81	573.94
4M	58+13.27	0.86	573.51	573.61
4N	58+23.21	0.94	573.21	573.27
4O	-	-	-	-
℄ W BRG PIER 9 EB	58+32.12	1.05	572.94	572.97
℄ PIER 9 EB	58+33.24	1.06	572.91	572.93
℄ E BRG PIER 9 EB	58+34.37	1.05	572.88	572.90
4P	58+44.30	1.05	572.57	572.63
4Q	58+54.23	1.07	572.27	572.36
4R	58+64.16	1.12	571.97	572.09
4S	58+74.09	1.21	571.67	571.81
4T	58+84.03	1.33	571.37	571.53
4U	58+93.96	1.47	571.08	571.25
4V	59+03.89	1.65	570.78	570.96
4W	59+13.82	1.86	570.49	570.66
4X	59+23.75	2.10	570.20	570.36
4Y	59+33.68	2.38	569.91	570.06
4Z	59+43.60	2.68	569.62	569.75
4AA	59+53.53	3.02	569.33	569.44
4AB	59+63.45	3.38	569.05	569.12
4AC	-	-	-	-
℄ BRG. E. ABUT. EB	59+76.64	3.91	568.67	568.69
℄ EXP. JT.	59+78.29	3.99	568.62	568.65
BK E. ABUT. EB	59+80.45	4.08	568.56	568.58

BEAM E4

Location	Station	Offset	Theoretical Grade Elevations	Theoretical Grade Elevations Adjusted for Dead Load Deflection and Grinding
℄ PIER 8 EB	56+82.12	8.45	577.69	577.71
℄ E BRG. PIER 8 EB	56+83.33	8.45	577.66	577.68
4A	56+93.33	8.50	577.37	577.43
4B	57+03.33	8.55	577.06	577.16
4C	57+13.33	8.60	576.77	576.90
4D	57+23.33	8.65	576.48	576.64
4E	57+33.33	8.70	576.19	576.37
4F	57+43.33	8.75	575.89	576.08
4G	57+53.33	8.81	575.59	575.79
4H	57+63.33	8.86	575.30	575.50
4I	57+73.33	8.91	575.01	575.20
4J	57+83.33	8.96	574.72	574.89
4K	57+93.33	9.01	574.43	574.59
4L	58+03.33	9.10	574.13	574.27
4M	58+13.25	9.22	573.85	573.95
4N	58+23.16	9.37	573.56	573.62
4O	-	-	-	-
℄ W BRG PIER 9 EB	58+33.11	9.55	573.28	573.30
℄ PIER 9 EB	58+34.24	9.57	573.24	573.27
℄ E BRG PIER 9 EB	58+35.36	9.57	573.21	573.23
4P	58+45.26	9.65	572.92	572.98
4Q	58+55.17	9.76	572.64	572.73
4R	58+65.08	9.89	572.35	572.47
4S	58+74.98	10.07	572.07	572.21
4T	58+84.89	10.27	571.79	571.95
4U	58+94.79	10.50	571.51	571.68
4V	59+04.69	10.76	571.23	571.41
4W	59+14.59	11.06	570.95	571.12
4X	59+24.49	11.39	570.66	570.83
4Y	59+34.39	11.74	570.37	570.53
4Z	59+44.28	12.13	570.09	570.22
4AA	59+54.18	12.55	569.81	569.92
4AB	59+64.07	13.00	569.53	569.61
4AC	-	-	-	-
℄ BRG. E. ABUT. EB	59+78.37	13.70	569.13	569.15
℄ EXP. JT.	59+80.01	13.79	569.08	569.10
BK E. ABUT. EB	59+82.17	13.90	569.02	569.04

NOTES:

1. All Elevations and Offsets are in feet.
2. Offsets are measured with respect to the I-80 EB PGL. Negative offsets are left and positive are right of the PGL.

SOUTH EDGE OF NORTH LANE - EB

Location	Station	Offset	Theoretical Grade Elevations	Theoretical Grade Elevations Adjusted for Dead Load Deflection and Grinding
℄ PIER 8 EB	56+82.12	12.00	577.77	577.79
℄ E BRG. PIER 8 EB	56+83.33	12.00	577.73	577.76
4A	56+93.33	12.00	577.44	577.51
4B	57+03.33	12.00	577.15	577.25
4C	57+13.33	12.00	576.86	577.00
4D	57+23.33	12.00	576.57	576.73
4E	57+33.33	12.00	576.28	576.46
4F	57+43.33	12.00	575.99	576.18
4G	57+53.33	12.00	575.70	575.89
4H	57+63.33	12.00	575.41	575.60
4I	57+73.33	12.00	575.12	575.31
4J	57+83.33	12.00	574.82	575.00
4K	57+93.33	12.00	574.53	574.69
4L	58+03.33	12.00	574.24	574.38
4M	58+13.24	12.00	573.95	574.06
4N	58+23.14	12.00	573.67	573.73
4O	-	-	-	-
℄ W BRG PIER 9 EB	58+33.40	12.00	573.37	573.39
℄ PIER 9 EB	58+34.52	12.00	573.34	573.36
℄ E BRG PIER 9 EB	58+35.64	12.00	573.30	573.32
4P	58+45.54	12.00	573.01	573.07
4Q	58+55.44	12.00	572.73	572.82
4R	58+65.34	12.00	572.44	572.56
4S	58+75.24	12.00	572.15	572.29
4T	58+85.14	12.00	571.86	572.02
4U	58+95.04	12.00	571.57	571.75
4V	59+04.94	12.00	571.29	571.46
4W	59+14.84	12.00	570.99	571.16
4X	59+24.74	12.00	570.68	570.85
4Y	59+34.64	12.00	570.38	570.53
4Z	59+44.54	12.00	570.08	570.21
4AA	59+54.44	12.00	569.77	569.88
4AB	59+64.34	12.00	569.47	569.55
4AC	-	-	-	-
℄ BRG. E. ABUT. EB	59+78.07	12.00	569.05	569.07
℄ EXP. JT.	59+79.70	12.00	569.00	569.02
BK E. ABUT. EB	59+81.83	12.00	568.93	568.95

BEAM E5

Location	Station	Offset	Theoretical Grade Elevations	Theoretical Grade Elevations Adjusted for Dead Load Deflection and Grinding
℄ PIER 8 EB	56+82.12	15.98	577.86	577.88
℄ E BRG. PIER 8 EB	56+83.33	15.99	577.82	577.85
4A	56+93.33	16.11	577.54	577.60
4B	57+03.33	16.22	577.26	577.36
4C	57+13.33	16.33	576.98	577.11
4D	57+23.33	16.44	576.69	576.85
4E	57+33.33	16.55	576.41	576.58
4F	57+43.33	16.67	576.13	576.33
4G	57+53.33	16.78	575.85	576.05
4H	57+63.32	16.89	575.57	575.76
4I	57+73.32	17.00	575.28	575.47
4J	57+83.32	17.12	575.01	575.19
4K	57+93.32	17.23	574.73	574.89
4L	58+03.32	17.38	574.45	574.59
4M	58+13.22	17.56	574.18	574.29
4N	58+23.10	17.77	573.91	573.97
4O	-	-	-	-
℄ W BRG PIER 9 EB	58+34.11	18.05	573.61	573.63
℄ PIER 9 EB	58+35.23	18.07	573.58	573.60
℄ E BRG PIER 9 EB	58+36.35	18.08	573.54	573.57
4P	58+46.23	18.25	573.27	573.33
4Q	58+56.11	18.44	573.00	573.10
4R	58+65.98	18.66	572.73	572.86
4S	58+75.86	18.92	572.47	572.61
4T	58+85.74	19.20	572.20	572.36
4U	58+95.61	19.52	571.94	572.11
4V	59+05.48	19.87	571.68	571.85
4W	59+15.35	20.24	571.40	571.57
4X	59+25.22	20.65	571.12	571.29
4Y	59+35.09	21.09	570.84	570.99
4Z	59+44.95	21.56	570.56	570.70
4AA	59+54.81	22.07	570.29	570.40
4AB	59+64.67	22.60	570.01	570.09
4AC	59+74.52	23.16	569.74	569.78
℄ BRG. E. ABUT. EB	59+80.08	23.49	569.58	569.60
℄ EXP. JT.	59+81.72	23.59	569.54	569.56
BK E. ABUT. EB	59+83.87	23.73	569.48	569.50

BEAM E6

Location	Station	Offset	Theoretical Grade Elevations	Theoretical Grade Elevations Adjusted for Dead Load Deflection and Grinding
℄ PIER 8 EB	56+82.12	23.51	578.03	578.05
℄ E BRG. PIER 8 EB	56+83.33	23.53	578.00	578.02
4A	56+93.33	23.70	577.73	577.79
4B	57+03.33	23.88	577.46	577.56
4C	57+13.33	24.05	577.18	577.32
4D	57+23.32	24.23	576.91	577.08
4E	57+33.32	24.40	576.64	576.83
4F	57+43.32	24.57	576.37	576.57
4G	57+53.32	24.75	576.10	576.31
4H	57+63.32	24.92	575.84	576.04
4I	57+73.32	25.09	575.57	575.77
4J	57+83.31	25.27	575.30	575.49
4K	57+93.31	25.45	575.04	575.20
4L	58+03.31	25.66	574.77	574.91
4M	58+13.19	25.90	574.51	574.62
4N	58+23.04	26.17	574.25	574.33
4O	-	-	-	-
℄ W BRG PIER 9 EB	58+35.09	26.54	573.94	573.96
℄ PIER 9 EB	58+36.21	26.58	573.91	573.93
℄ E BRG PIER 9 EB	58+37.33	26.60	573.88	573.90
4P	58+47.18	26.84	573.62	573.68
4Q	58+57.03	27.12	573.37	573.46
4R	58+66.88	27.43	573.12	573.24
4S	58+76.73	27.76	572.86	573.01
4T	58+86.58	28.13	572.61	572.77
4U	58+96.42	28.53	572.37	572.54
4V	59+06.26	28.96	572.13	572.30
4W	59+16.10	29.42	571.85	572.03
4X	59+25.94	29.91	571.58	571.75
4Y	59+35.78	30.43	571.30	571.46
4Z	59+45.61	30.98	571.03	571.17
4AA	59+55.43	31.57	570.76	570.87
4AB	59+65.26	32.18	570.49	570.57
4AC	59+75.08	32.83	570.22	570.27
℄ BRG. E. ABUT. EB	59+81.78	33.28	570.04	570.06
℄ EXP. JT.	59+83.42	33.40	570.00	570.02
BK E. ABUT. EB	59+85.57	33.55	569.94	569.96

NOTES:

1. All Elevations and Offsets are in feet.
2. Offsets are measured with respect to the I-80 EB PGL. Negative offsets are left and positive are right of the PGL.

NORTH EDGE OF SOUTH LANE - EB

Location	Station	Offset	Theoretical Grade Elevations	Theoretical Grade Elevations Adjusted for Dead Load Deflection and Grinding
℄ PIER 8 EB	56+82.12	24.00	578.04	578.06
℄ E BRG. PIER 8 EB	56+83.33	24.00	578.01	578.03
4A	56+93.33	24.00	577.73	577.80
4B	57+03.33	24.00	577.46	577.56
4C	57+13.33	24.00	577.18	577.32
4D	57+23.33	24.00	576.91	577.07
4E	57+33.33	24.00	576.63	576.82
4F	57+43.33	24.00	576.36	576.56
4G	57+53.33	24.00	576.08	576.29
4H	57+63.33	24.00	575.81	576.01
4I	57+73.33	24.00	575.53	575.73
4J	57+83.33	24.00	575.25	575.44
4K	57+93.33	24.00	574.98	575.15
4L	58+03.33	24.00	574.70	574.85
4M	58+13.21	24.00	574.43	574.54
4N	58+23.08	24.00	574.16	574.24
4O	-	-	-	-
℄ W BRG PIER 9 EB	58+34.80	24.00	573.84	573.86
℄ PIER 9 EB	58+35.92	24.00	573.81	573.83
℄ E BRG PIER 9 EB	58+37.03	24.00	573.78	573.80
4P	58+46.89	24.00	573.50	573.56
4Q	58+56.76	24.00	573.23	573.32
4R	58+66.62	24.00	572.96	573.08
4S	58+76.48	24.00	572.69	572.83
4T	58+86.34	24.00	572.42	572.58
4U	58+96.21	24.00	572.15	572.32
4V	59+06.07	24.00	571.87	572.05
4W	59+15.93	24.00	571.58	571.75
4X	59+25.80	24.00	571.27	571.44
4Y	59+35.66	24.00	570.97	571.13
4Z	59+45.52	24.00	570.67	570.81
4AA	59+55.39	24.00	570.37	570.48
4AB	59+65.25	24.00	570.07	570.15
4AC	59+75.12	24.00	569.76	569.81
℄ BRG. E. ABUT. EB	59+80.17	24.00	569.61	569.63
℄ EXP. JT.	59+81.79	24.00	569.56	569.58
BK E. ABUT. EB	59+83.92	24.00	569.50	569.52

BEAM E7

Location	Station	Offset	Theoretical Grade Elevations	Theoretical Grade Elevations Adjusted for Dead Load Deflection and Grinding
℄ PIER 8 EB	56+82.12	31.04	578.20	578.23
℄ E BRG. PIER 8 EB	56+83.33	31.07	578.17	578.19
4A	56+93.33	31.30	577.92	577.98
4B	57+03.32	31.54	577.65	577.76
4C	57+13.32	31.77	577.40	577.54
4D	57+23.32	32.00	577.13	577.29
4E	57+33.32	32.24	576.87	577.06
4F	57+43.31	32.47	576.61	576.81
4G	57+53.31	32.71	576.36	576.56
4H	57+63.31	32.94	576.10	576.31
4I	57+73.31	33.17	575.85	576.05
4J	57+83.30	33.41	575.59	575.78
4K	57+93.30	33.65	575.34	575.51
4L	58+03.30	33.92	575.09	575.23
4M	58+13.15	34.22	574.84	574.96
4N	58+22.98	34.55	574.60	574.68
4O	-	-	-	-
℄ W BRG PIER 9 EB	58+36.08	35.04	574.28	574.30
℄ PIER 9 EB	58+37.19	35.08	574.25	574.27
℄ E BRG PIER 9 EB	58+38.31	35.12	574.22	574.24
4P	58+48.13	35.44	573.98	574.04
4Q	58+57.96	35.80	573.74	573.84
4R	58+67.78	36.19	573.49	573.62
4S	58+77.60	36.60	573.22	573.38
4T	58+87.41	37.05	572.96	573.14
4U	58+97.23	37.53	572.69	572.88
4V	59+07.04	38.04	572.43	572.62
4W	59+16.85	38.58	572.12	572.32
4X	59+26.65	39.16	571.81	572.00
4Y	59+36.45	39.76	571.50	571.67
4Z	59+46.25	40.39	571.18	571.34
4AA	59+56.05	41.05	570.87	571.00
4AB	59+65.84	41.75	570.56	570.65
4AC	59+75.63	42.47	570.24	570.30
℄ BRG. E. ABUT. EB	59+83.47	43.08	569.99	570.01
℄ EXP. JT.	59+85.11	43.20	569.94	569.96
BK E. ABUT. EB	59+87.25	43.37	569.87	569.89

CROWN EB

Location	Station	Offset	Theoretical Grade Elevations	Theoretical Grade Elevations Adjusted for Dead Load Deflection and Grinding
℄ PIER 8 EB	56+82.12	36.00	578.32	578.34
℄ E BRG. PIER 8 EB	56+83.33	36.00	578.28	578.31
4A	56+93.33	36.00	578.02	578.09
4B	57+03.33	36.00	577.76	577.87
4C	57+13.33	36.00	577.50	577.64
4D	57+23.33	36.00	577.24	577.41
4E	57+33.33	36.00	576.98	577.17
4F	57+43.33	36.00	576.72	576.92
4G	57+53.33	36.00	576.46	576.67
4H	57+63.33	36.00	576.20	576.41
4I	57+73.33	36.00	575.94	576.15
4J	57+83.33	36.00	575.68	575.87
4K	57+93.33	36.00	575.42	575.60
4L	58+03.33	36.00	575.16	575.31
4M	58+13.18	36.00	574.91	575.02
4N	58+23.01	36.00	574.65	574.73
4O	-	-	-	-
℄ W BRG PIER 9 EB	58+36.19	36.00	574.31	574.33
℄ PIER 9 EB	58+37.30	36.00	574.28	574.30
℄ E BRG PIER 9 EB	58+38.41	36.00	574.25	574.27
4P	58+48.24	36.00	574.00	574.06
4Q	58+58.06	36.00	573.74	573.84
4R	58+67.89	36.00	573.49	573.62
4S	58+77.71	36.00	573.23	573.39
4T	58+87.54	36.00	572.98	573.15
4U	58+97.37	36.00	572.72	572.91
4V	59+07.19	36.00	572.46	572.66
4W	59+17.02	36.00	572.17	572.36
4X	59+26.85	36.00	571.87	572.06
4Y	59+36.68	36.00	571.56	571.74
4Z	59+46.50	36.00	571.26	571.42
4AA	59+56.33	36.00	570.96	571.09
4AB	59+66.16	36.00	570.66	570.76
4AC	59+75.99	36.00	570.36	570.42
℄ BRG. E. ABUT. EB	59+82.25	36.00	570.17	570.19
℄ EXP. JT.	59+83.87	36.00	570.12	570.14
BK E. ABUT. EB	59+85.99	36.00	570.06	570.08

NOTES:

1. All Elevations and Offsets are in feet.
2. Offsets are measured with respect to the I-80 EB PGL. Negative offsets are left and positive are right of the PGL.

NORTH EDGE OF RAMP A

Location	Station	Offset	Theoretical Grade Elevations	Theoretical Grade Elevations Adjusted for Dead Load Deflection and Grinding
℄ PIER 8 EB	56+82.12	36.15	578.31	578.33
℄ E BRG. PIER 8 EB	56+83.33	36.21	578.28	578.30
4A	56+93.32	36.74	578.01	578.07
4B	57+03.30	37.26	577.74	577.84
4C	57+13.29	37.78	577.47	577.61
4D	57+23.27	38.31	577.20	577.36
4E	57+33.26	38.83	576.93	577.11
4F	57+43.25	39.35	576.66	576.86
4G	57+53.23	39.88	576.39	576.59
4H	57+63.22	40.40	576.12	576.33
4I	57+73.21	40.92	575.85	576.05
4J	57+83.19	41.45	575.58	575.77
4K	57+93.18	41.98	575.31	575.48
4L	58+03.17	42.53	575.04	575.19
4M	58+12.99	43.12	574.77	574.89
4N	58+22.78	43.75	574.50	574.59
4O	-	-	-	-
℄ W BRG PIER 9 EB	58+37.19	44.71	574.11	574.13
℄ PIER 9 EB	58+38.31	44.79	574.08	574.10
℄ E BRG PIER 9 EB	58+39.42	44.87	574.05	574.07
4P	58+49.20	45.57	573.78	573.84
4Q	58+58.98	46.31	573.51	573.61
4R	58+68.74	47.07	573.24	573.37
4S	58+78.51	47.87	572.97	573.12
4T	58+88.27	48.69	572.70	572.87
4U	58+98.03	49.55	572.43	572.61
4V	59+07.78	50.43	572.16	572.35
4W	59+17.52	51.35	571.85	572.03
4X	59+27.27	52.29	571.53	571.71
4Y	59+37.00	53.27	571.21	571.38
4Z	59+46.73	54.28	570.89	571.04
4AA	59+56.45	55.32	570.57	570.70
4AB	59+66.17	56.38	570.25	570.35
4AC	59+75.89	57.48	569.93	569.99
℄ BRG. E. ABUT. EB	59+86.15	58.68	569.60	569.62
℄ EXP. JT.	59+87.79	58.87	569.54	569.56
BK E. ABUT. EB	59+89.94	59.13	569.47	569.50

BEAM E8

Location	Station	Offset	Theoretical Grade Elevations	Theoretical Grade Elevations Adjusted for Dead Load Deflection and Grinding
℄ PIER 8 EB	56+82.12	38.57	578.26	578.28
℄ E BRG. PIER 8 EB	56+83.33	38.61	578.23	578.25
4A	56+93.33	38.90	577.96	578.03
4B	57+03.32	39.19	577.70	577.80
4C	57+13.32	39.49	577.43	577.57
4D	57+23.31	39.78	577.17	577.33
4E	57+33.31	40.07	576.90	577.09
4F	57+43.30	40.37	576.64	576.83
4G	57+53.30	40.66	576.37	576.58
4H	57+63.30	40.95	576.11	576.31
4I	57+73.29	41.25	575.84	576.04
4J	57+83.29	41.54	575.57	575.76
4K	57+93.28	41.84	575.31	575.48
4L	58+03.28	42.17	575.04	575.19
4M	58+13.11	42.53	574.78	574.90
4N	58+22.91	42.92	574.52	574.60
4O	-	-	-	-
℄ W BRG PIER 9 EB	58+37.05	43.54	574.14	574.16
℄ PIER 9 EB	58+38.17	43.59	574.11	574.13
℄ E BRG PIER 9 EB	58+39.28	43.63	574.08	574.10
4P	58+49.08	44.04	573.81	573.88
4Q	58+58.87	44.47	573.55	573.65
4R	58+68.66	44.94	573.29	573.42
4S	58+78.45	45.44	573.02	573.17
4T	58+88.24	45.97	572.76	572.93
4U	58+98.02	46.53	572.49	572.67
4V	59+07.80	47.12	572.23	572.41
4W	59+17.58	47.74	571.92	572.10
4X	59+27.36	48.39	571.60	571.78
4Y	59+37.13	49.07	571.29	571.46
4Z	59+46.89	49.78	570.98	571.12
4AA	59+56.65	50.52	570.66	570.79
4AB	59+66.41	51.30	570.35	570.44
4AC	59+76.17	52.10	570.03	570.09
℄ BRG. E. ABUT. EB	59+85.16	52.87	569.74	569.76
℄ EXP. JT.	59+86.79	53.01	569.69	569.71
BK E. ABUT. EB	59+88.93	53.20	569.62	569.64

BEAM E9

Location	Station	Offset	Theoretical Grade Elevations	Theoretical Grade Elevations Adjusted for Dead Load Deflection and Grinding
℄ PIER 8 EB	56+82.12	46.10	578.10	578.12
℄ E BRG. PIER 8 EB	56+83.33	46.14	578.07	578.09
4A	56+93.32	46.50	577.80	577.87
4B	57+03.32	46.85	577.53	577.64
4C	57+13.31	47.20	577.27	577.41
4D	57+23.30	47.55	577.00	577.17
4E	57+33.30	47.91	576.73	576.93
4F	57+43.29	48.26	576.47	576.68
4G	57+53.29	48.61	576.20	576.42
4H	57+63.28	48.96	575.93	576.15
4I	57+73.27	49.31	575.67	575.88
4J	57+83.27	49.67	575.40	575.60
4K	57+93.26	50.03	575.13	575.32
4L	58+03.26	50.41	574.87	575.03
4M	58+13.07	50.83	574.60	574.73
4N	58+22.84	51.28	574.34	574.43
4O	58+32.61	51.76	574.08	574.12
℄ W BRG PIER 9 EB	58+38.03	52.04	573.93	573.95
℄ PIER 9 EB	58+39.14	52.10	573.90	573.92
℄ E BRG PIER 9 EB	58+40.25	52.15	573.87	573.89
4P	58+50.02	52.63	573.61	573.67
4Q	58+59.78	53.15	573.34	573.44
4R	58+69.55	53.70	573.08	573.21
4S	58+79.31	54.27	572.81	572.97
4T	58+89.06	54.88	572.55	572.72
4U	58+98.81	55.52	572.28	572.47
4V	59+08.56	56.18	572.01	572.20
4W	59+18.31	56.88	571.70	571.89
4X	59+28.05	57.61	571.38	571.57
4Y	59+37.79	58.37	571.07	571.25
4Z	59+47.52	59.16	570.75	570.91
4AA	59+57.25	59.98	570.44	570.58
4AB	59+66.97	60.83	570.13	570.23
4AC	59+76.69	61.71	569.81	569.88
℄ BRG. E. ABUT. EB	59+86.83	62.66	569.48	569.51
℄ EXP. JT.	59+88.46	62.82	569.43	569.45
BK E. ABUT. EB	59+90.60	63.02	569.36	569.38

NOTES:

1. All Elevations and Offsets are in feet.
2. Offsets are measured with respect to the I-80 EB PGL. Negative offsets are left and positive are right of the PGL.

℄ RAMP A

Location	Station	Offset	Theoretical Grade Elevations	Theoretical Grade Elevations Adjusted for Dead Load Deflection and Grinding
℄ PIER 8 EB	56+82.12	48.17	578.06	578.08
℄ E BRG. PIER 8 EB	56+83.33	48.23	578.02	578.04
4A	56+93.32	48.75	577.75	577.82
4B	57+03.30	49.28	577.48	577.60
4C	57+13.29	49.80	577.21	577.37
4D	57+23.27	50.32	576.94	577.13
4E	57+33.26	50.85	576.67	576.88
4F	57+43.25	51.37	576.40	576.63
4G	57+53.23	51.89	576.13	576.37
4H	57+63.22	52.42	575.86	576.10
4I	57+73.21	52.94	575.59	575.82
4J	57+83.19	53.46	575.32	575.54
4K	57+93.18	53.99	575.05	575.25
4L	58+03.17	54.55	574.78	574.95
4M	58+12.96	55.14	574.51	574.65
4N	58+22.71	55.76	574.25	574.35
4O	58+32.46	56.41	573.98	574.03
℄ W BRG PIER 9 EB	58+38.57	56.83	573.81	573.83
℄ PIER 9 EB	58+39.69	56.91	573.78	573.80
℄ E BRG PIER 9 EB	58+40.80	56.99	573.75	573.77
4P	58+50.54	57.70	573.48	573.55
4Q	58+60.28	58.44	573.21	573.32
4R	58+70.01	59.20	572.94	573.08
4S	58+79.74	60.00	572.67	572.84
4T	58+89.46	60.83	572.40	572.59
4U	58+99.18	61.69	572.13	572.34
4V	59+08.90	62.58	571.85	572.06
4W	59+18.61	63.50	571.54	571.75
4X	59+28.31	64.45	571.22	571.43
4Y	59+38.01	65.43	570.90	571.09
4Z	59+47.71	66.44	570.58	570.76
4AA	59+57.39	67.48	570.26	570.41
4AB	59+67.08	68.55	569.94	570.06
4AC	59+76.75	69.65	569.62	569.70
℄ BRG. E. ABUT. EB	59+88.24	71.00	569.25	569.27
℄ EXP. JT.	59+89.88	71.19	569.19	569.22
BK E. ABUT. EB	59+92.02	71.45	569.12	569.15

BEAM E10

Location	Station	Offset	Theoretical Grade Elevations	Theoretical Grade Elevations Adjusted for Dead Load Deflection and Grinding
℄ PIER 8 EB	56+82.12	53.63	577.94	577.96
℄ E BRG. PIER 8 EB	56+83.33	53.68	577.91	577.93
4A	56+93.32	54.09	577.64	577.71
4B	57+03.31	54.50	577.37	577.49
4C	57+13.30	54.91	577.10	577.26
4D	57+23.30	55.32	576.84	577.02
4E	57+33.29	55.73	576.57	576.78
4F	57+43.28	56.14	576.30	576.53
4G	57+53.27	56.55	576.03	576.27
4H	57+63.26	56.96	575.76	576.00
4I	57+73.25	57.37	575.50	575.73
4J	57+83.25	57.78	575.23	575.45
4K	57+93.24	58.20	574.96	575.16
4L	58+03.23	58.65	574.69	574.86
4M	58+13.02	59.12	574.43	574.56
4N	58+22.77	59.63	574.16	574.26
4O	58+32.51	60.17	573.90	573.95
℄ W BRG PIER 9 EB	58+38.99	60.54	573.72	573.74
℄ PIER 9 EB	58+40.10	60.61	573.69	573.71
℄ E BRG PIER 9 EB	58+41.21	60.67	573.66	573.68
4P	58+50.95	61.23	573.40	573.46
4Q	58+60.69	61.82	573.13	573.23
4R	58+70.42	62.44	572.86	573.00
4S	58+80.15	63.10	572.60	572.76
4T	58+89.87	63.78	572.33	572.51
4U	58+99.60	64.50	572.06	572.26
4V	59+09.31	65.24	571.78	571.99
4W	59+19.03	66.02	571.47	571.68
4X	59+28.74	66.82	571.15	571.36
4Y	59+38.44	67.66	570.84	571.03
4Z	59+48.14	68.52	570.52	570.69
4AA	59+57.84	69.42	570.20	570.35
4AB	59+67.53	70.35	569.89	570.00
4AC	59+77.21	71.30	569.57	569.65
℄ BRG. E. ABUT. EB	59+88.49	72.46	569.21	569.23
℄ EXP. JT.	59+90.12	72.63	569.15	569.17
BK E. ABUT. EB	59+92.25	72.85	569.08	569.11

BEAM E11

Location	Station	Offset	Theoretical Grade Elevations	Theoretical Grade Elevations Adjusted for Dead Load Deflection and Grinding
℄ PIER 8 EB	56+82.12	61.16	577.78	577.80
℄ E BRG. PIER 8 EB	56+83.33	61.22	577.75	577.77
4A	56+93.32	61.69	577.48	577.55
4B	57+03.31	62.15	577.21	577.33
4C	57+13.30	62.62	576.94	577.10
4D	57+23.29	63.09	576.67	576.86
4E	57+33.28	63.55	576.40	576.62
4F	57+43.26	64.02	576.13	576.37
4G	57+53.25	64.49	575.86	576.11
4H	57+63.24	64.96	575.59	575.84
4I	57+73.23	65.42	575.32	575.57
4J	57+83.22	65.89	575.06	575.28
4K	57+93.21	66.36	574.79	575.00
4L	58+03.20	66.87	574.52	574.70
4M	58+12.97	67.40	574.25	574.40
4N	58+22.69	67.96	573.99	574.09
4O	58+32.40	68.56	573.72	573.78
℄ W BRG PIER 9 EB	58+39.95	69.04	573.51	573.53
℄ PIER 9 EB	58+41.06	69.11	573.48	573.50
℄ E BRG PIER 9 EB	58+42.17	69.18	573.45	573.47
4P	58+51.88	69.82	573.18	573.25
4Q	58+61.59	70.49	572.92	573.02
4R	58+71.29	71.19	572.65	572.79
4S	58+80.99	71.92	572.38	572.55
4T	58+90.68	72.68	572.11	572.31
4U	59+00.37	73.47	571.84	572.05
4V	59+10.06	74.29	571.55	571.77
4W	59+19.74	75.14	571.24	571.46
4X	59+29.41	76.02	570.92	571.14
4Y	59+39.09	76.93	570.60	570.81
4Z	59+48.75	77.87	570.29	570.47
4AA	59+58.41	78.84	569.97	570.13
4AB	59+68.07	79.85	569.65	569.77
4AC	59+77.72	80.88	569.33	569.42
℄ BRG. E. ABUT. EB	59+90.14	82.25	568.93	568.95
℄ EXP. JT.	59+91.77	82.43	568.88	568.90
BK E. ABUT. EB	59+93.90	82.68	568.81	568.83

NOTES:

1. All Elevations and Offsets are in feet.
2. Offsets are measured with respect to the I-80 EB PGL. Negative offsets are left and positive are right of the PGL.

BEAM E12

Location	Station	Offset	Theoretical Grade Elevations	Theoretical Grade Elevations Adjusted for Dead Load Deflection and Grinding
℄ PIER 8 EB	56+82.12	68.69	577.62	577.64
℄ E BRG. PIER 8 EB	56+83.33	68.76	577.58	577.60
4A	56+93.32	69.28	577.31	577.39
4B	57+03.30	69.80	577.04	577.18
4C	57+13.29	70.33	576.77	576.95
4D	57+23.27	70.85	576.50	576.72
4E	57+33.26	71.37	576.23	576.48
4F	57+43.25	71.90	575.96	576.23
4G	57+53.23	72.42	575.69	575.97
4H	57+63.22	72.94	575.42	575.70
4I	57+73.21	73.47	575.15	575.43
4J	57+83.19	73.99	574.88	575.14
4K	57+93.18	74.52	574.61	574.85
4L	58+03.17	75.08	574.34	574.55
4M	58+12.91	75.67	574.08	574.24
4N	58+22.60	76.29	573.81	573.93
4O	58+32.29	76.94	573.54	573.61
℄ W BRG PIER 9 EB	58+40.91	77.54	573.30	573.32
℄ PIER 9 EB	58+42.02	77.62	573.27	573.29
℄ E BRG PIER 9 EB	58+43.13	77.70	573.24	573.26
4P	58+52.81	78.41	572.97	573.04
4Q	58+62.48	79.16	572.70	572.82
4R	58+72.15	79.93	572.43	572.59
4S	58+81.82	80.74	572.16	572.35
4T	58+91.48	81.57	571.89	572.11
4U	59+01.14	82.44	571.62	571.85
4V	59+10.79	83.33	571.33	571.56
4W	59+20.44	84.26	571.01	571.25
4X	59+30.09	85.21	570.69	570.93
4Y	59+39.72	86.20	570.37	570.60
4Z	59+49.36	87.21	570.05	570.26
4AA	59+58.98	88.26	569.73	569.91
4AB	59+68.60	89.33	569.41	569.55
4AC	59+78.22	90.44	569.10	569.19
℄ BRG. E. ABUT. EB	59+91.78	92.05	568.65	568.67
℄ EXP. JT.	59+93.41	92.24	568.60	568.62
BK E. ABUT. EB	59+95.53	92.50	568.53	568.55

INSIDE FACE OF SOUTH PARAPET EB

Location	Station	Offset	Theoretical Grade Elevations	Theoretical Grade Elevations Adjusted for Dead Load Deflection and Grinding
℄ PIER 8 EB	56+82.12	70.20	577.58	577.61
℄ E BRG. PIER 8 EB	56+83.33	70.26	577.55	577.57
4A	56+93.32	70.78	577.28	577.36
4B	57+03.30	71.31	577.01	577.15
4C	57+13.29	71.83	576.74	576.92
4D	57+23.27	72.35	576.47	576.69
4E	57+33.26	72.88	576.20	576.45
4F	57+43.25	73.40	575.93	576.20
4G	57+53.23	73.92	575.66	575.94
4H	57+63.22	74.45	575.39	575.67
4I	57+73.21	74.97	575.12	575.39
4J	57+83.19	75.49	574.85	575.11
4K	57+93.18	76.02	574.58	574.82
4L	58+03.17	76.58	574.31	574.52
4M	58+12.91	77.17	574.04	574.21
4N	58+22.60	77.79	573.78	573.90
4O	58+32.28	78.44	573.51	573.58
℄ W BRG PIER 9 EB	58+41.08	79.06	573.27	573.29
℄ PIER 9 EB	58+42.19	79.14	573.24	573.26
℄ E BRG PIER 9 EB	58+43.29	79.22	573.20	573.23
4P	58+52.97	79.93	572.94	573.01
4Q	58+62.64	80.67	572.67	572.78
4R	58+72.31	81.45	572.40	572.55
4S	58+81.97	82.25	572.13	572.31
4T	58+91.63	83.09	571.86	572.07
4U	59+01.28	83.95	571.59	571.82
4V	59+10.93	84.85	571.29	571.53
4W	59+20.58	85.77	570.97	571.21
4X	59+30.21	86.73	570.65	570.89
4Y	59+39.85	87.72	570.33	570.56
4Z	59+49.48	88.73	570.02	570.22
4AA	59+59.10	89.78	569.70	569.87
4AB	59+68.71	90.85	569.38	569.51
4AC	59+78.33	91.96	569.06	569.15
℄ BRG. E. ABUT. EB	59+92.04	93.59	568.61	568.63
℄ EXP. JT.	59+93.67	93.78	568.55	568.57
BK E. ABUT. EB	59+95.79	94.04	568.48	568.50

NOTES:

1. All Elevations and Offsets are in feet.
2. Offsets are measured with respect to the I-80 EB PGL. Negative offsets are left and positive are right of the PGL.

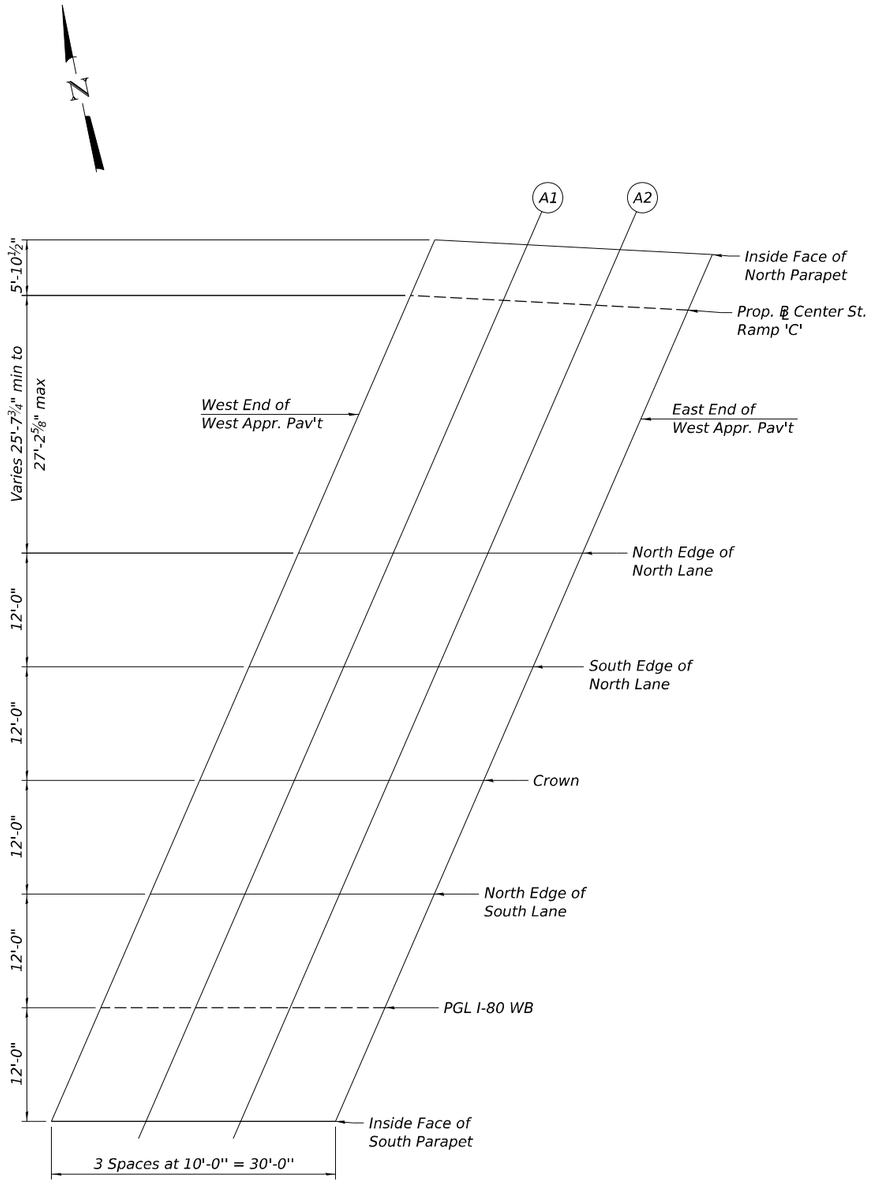

PLAN

West Approach (WB)

INSIDE FACE OF NORTH PARAPET

Location	Station	Offset	Theoretical Grade Elevations	Theoretical Grade Elevations Adjusted for Grinding
W End W Apr Pvt	38+32.48	-81.09	596.31	596.33
A1	38+42.48	-80.56	596.51	596.53
A2	38+52.48	-80.02	596.71	596.73
E End W Apr Pvt	38+62.48	-79.49	596.90	596.92

PROP. ℄ CENTER RAMP C

Location	Station	Offset	Theoretical Grade Elevations	Theoretical Grade Elevations Adjusted for Grinding
W End W Apr Pvt	38+30.10	-75.24	596.38	596.40
A1	38+40.10	-74.71	596.59	596.61
A2	38+50.10	-74.18	596.78	596.80
E End W Apr Pvt	38+60.10	-73.65	596.98	597.00

NORTH EDGE OF NORTH LANE

Location	Station	Offset	Theoretical Grade Elevations	Theoretical Grade Elevations Adjusted for Grinding
W End W Apr Pvt	38+19.00	-48.00	596.71	596.73
A1	38+29.00	-48.00	596.91	596.93
A2	38+39.00	-48.00	597.10	597.12
E End W Apr Pvt	38+49.00	-48.00	597.29	597.31

SOUTH EDGE OF NORTH LANE

Location	Station	Offset	Theoretical Grade Elevations	Theoretical Grade Elevations Adjusted for Grinding
W End W Apr Pvt	38+13.78	-36.00	596.49	596.51
A1	38+23.78	-36.00	596.71	596.73
A2	38+33.78	-36.00	596.93	596.95
E End W Apr Pvt	38+43.78	-36.00	597.15	597.17

CROWN

Location	Station	Offset	Theoretical Grade Elevations	Theoretical Grade Elevations Adjusted for Grinding
W End W Apr Pvt	38+08.57	-24.00	596.24	596.26
A1	38+18.57	-24.00	596.49	596.51
A2	38+28.57	-24.00	596.73	596.75
E End W Apr Pvt	38+38.57	-24.00	596.98	597.00

NORTH EDGE OF SOUTH LANE

Location	Station	Offset	Theoretical Grade Elevations	Theoretical Grade Elevations Adjusted for Grinding
W End W Apr Pvt	38+03.35	-12.00	595.86	595.88
A1	38+13.35	-12.00	596.12	596.14
A2	38+23.35	-12.00	596.36	596.39
E End W Apr Pvt	38+33.35	-12.00	596.61	596.63

PGL I-80 WB

Location	Station	Offset	Theoretical Grade Elevations	Theoretical Grade Elevations Adjusted for Grinding
W End W Apr Pvt	37+98.13	0.00	595.55	595.57
A1	38+08.13	0.00	595.80	595.82
A2	38+18.13	0.00	596.06	596.08
E End W Apr Pvt	38+28.13	0.00	596.30	596.32

INSIDE FACE OF SOUTH PARAPET

Location	Station	Offset	Theoretical Grade Elevations	Theoretical Grade Elevations Adjusted for Grinding
W End W Apr Pvt	37+92.91	12.00	595.17	595.20
A1	38+02.91	12.00	595.43	595.45
A2	38+12.91	12.00	595.68	595.71
E End W Apr Pvt	38+22.91	12.00	595.93	595.95

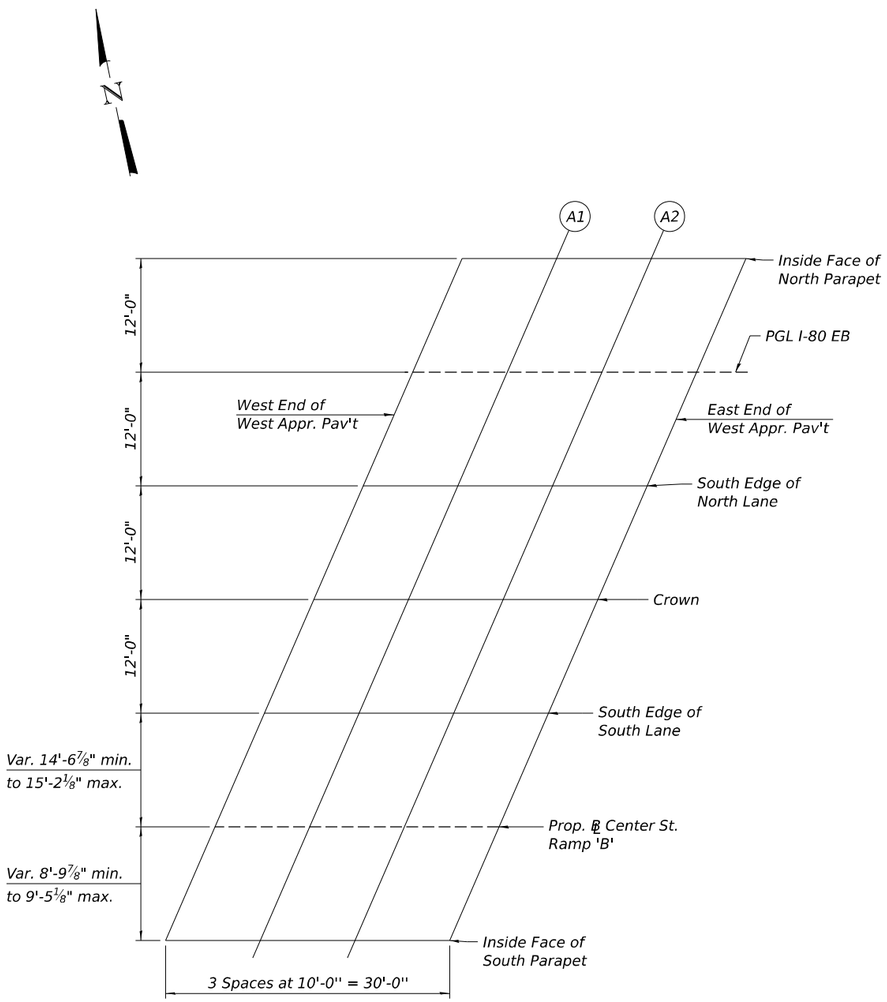

PLAN

West Approach (EB)

INSIDE FACE OF NORTH PARAPET

Location	Station	Offset	Theoretical Grade Elevations	Theoretical Grade Elevations Adjusted for Grinding
W End W Apr Pvt	37+85.09	-12.00	594.97	594.99
A1	37+95.09	-12.00	595.23	595.25
A2	38+05.09	-12.00	595.49	595.51
E End W Apr Pvt	38+15.09	-12.00	595.74	595.76

PGL I-80 EB

Location	Station	Offset	Theoretical Grade Elevations	Theoretical Grade Elevations Adjusted for Grinding
W End W Apr Pvt	37+79.87	0.00	595.08	595.10
A1	37+89.87	0.00	595.34	595.36
A2	37+99.87	0.00	595.59	595.61
E End W Apr Pvt	38+09.87	0.00	595.85	595.87

SOUTH EDGE OF NORTH LANE

Location	Station	Offset	Theoretical Grade Elevations	Theoretical Grade Elevations Adjusted for Grinding
W End W Apr Pvt	37+74.65	12.00	594.73	594.76
A1	37+84.65	12.00	595.02	595.04
A2	37+94.65	12.00	595.30	595.32
E End W Apr Pvt	38+04.65	12.00	595.58	595.60

CROWN

Location	Station	Offset	Theoretical Grade Elevations	Theoretical Grade Elevations Adjusted for Grinding
W End W Apr Pvt	37+69.44	24.00	594.36	594.38
A1	37+79.44	24.00	594.67	594.69
A2	37+89.44	24.00	594.98	595.00
E End W Apr Pvt	37+99.44	24.00	595.29	595.31

SOUTH EDGE OF SOUTH LANE

Location	Station	Offset	Theoretical Grade Elevations	Theoretical Grade Elevations Adjusted for Grinding
W End W Apr Pvt	37+64.22	36.00	594.02	594.04
A1	37+74.22	36.00	594.33	594.35
A2	37+84.22	36.00	594.64	594.66
E End W Apr Pvt	37+94.22	36.00	594.95	594.97

PROP. ℄ CENTER RAMP B

Location	Station	Offset	Theoretical Grade Elevations	Theoretical Grade Elevations Adjusted for Grinding
W End W Apr Pvt	37+57.89	51.18	593.55	593.57
A1	37+67.88	50.98	593.84	593.86
A2	37+77.88	50.78	594.15	594.17
E End W Apr Pvt	37+87.88	50.58	594.46	594.48

INSIDE FACE OF SOUTH PARAPET

Location	Station	Offset	Theoretical Grade Elevations	Theoretical Grade Elevations Adjusted for Grinding
W End W Apr Pvt	37+53.78	60.00	593.27	593.29
A1	37+63.78	60.00	593.53	593.55
A2	37+73.78	60.00	593.84	593.86
E End W Apr Pvt	37+83.78	60.00	594.15	594.17

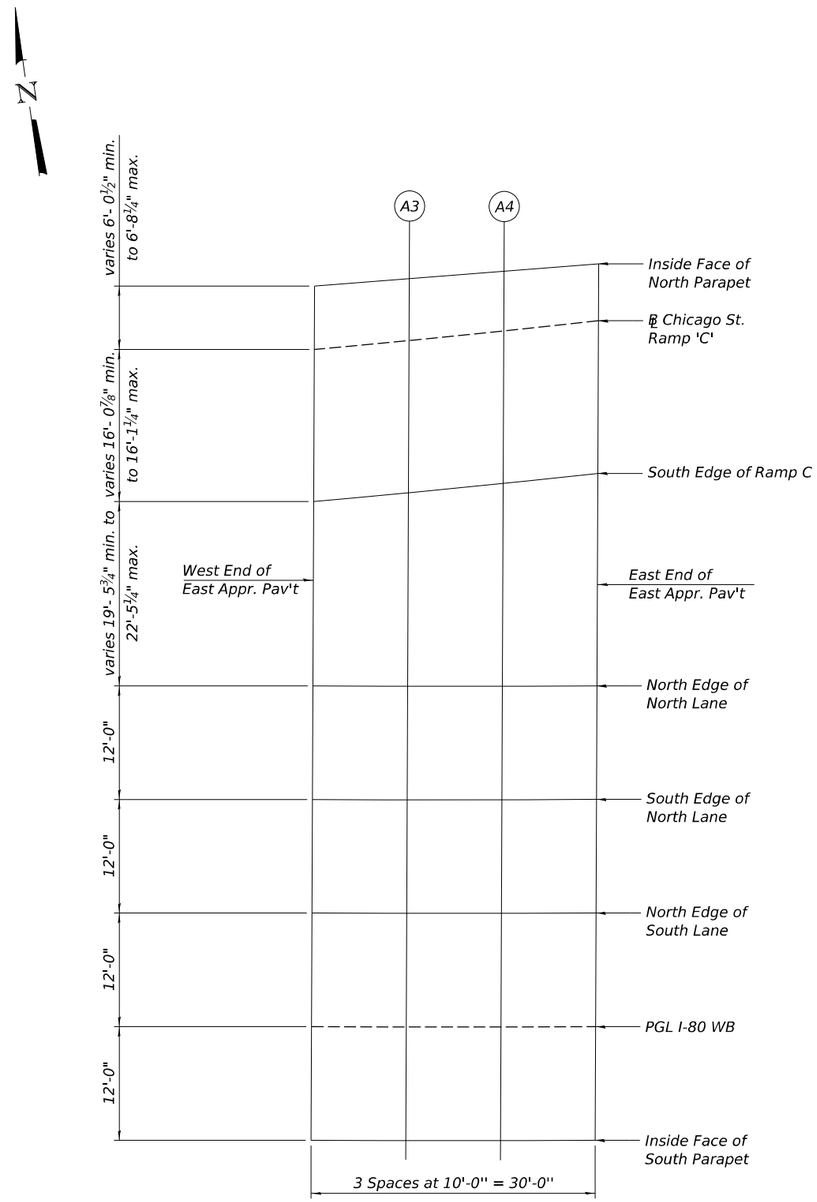

PLAN

East Approach (WB)

INSIDE FACE OF NORTH PARAPET

Location	Station	Offset	Theoretical Grade Elevations	Theoretical Grade Elevations Adjusted for Grinding
W End E Apr Pvt	59+73.32	-78.23	564.25	564.27
A3	59+83.61	-79.04	563.89	563.91
A4	59+93.90	-79.82	563.54	563.56
E End E Apr Pvt	60+04.31	-80.58	563.19	563.21

℄ CHICAGO RAMP C

Location	Station	Offset	Theoretical Grade Elevations	Theoretical Grade Elevations Adjusted for Grinding
W End E Apr Pvt	59+73.35	-71.55	564.67	564.69
A3	59+83.60	-72.50	564.30	564.33
A4	59+93.85	-73.50	563.94	563.96
E End E Apr Pvt	60+04.27	-74.54	563.58	563.60

SOUTH EDGE OF RAMP C

Location	Station	Offset	Theoretical Grade Elevations	Theoretical Grade Elevations Adjusted for Grinding
W End E Apr Pvt	59+73.42	-55.48	565.68	565.70
A3	59+83.62	-56.42	565.32	565.34
A4	59+93.82	-57.41	564.96	564.98
E End E Apr Pvt	60+04.18	-58.44	564.60	564.62

NORTH EDGE OF NORTH LANE

Location	Station	Offset	Theoretical Grade Elevations	Theoretical Grade Elevations Adjusted for Grinding
W End E Apr Pvt	59+73.50	-36.00	566.69	566.71
A3	59+83.68	-36.00	566.38	566.40
A4	59+93.87	-36.00	566.08	566.10
E End E Apr Pvt	60+04.05	-36.00	565.77	565.79

SOUTH EDGE OF NORTH LANE

Location	Station	Offset	Theoretical Grade Elevations	Theoretical Grade Elevations Adjusted for Grinding
W End E Apr Pvt	59+73.55	-24.00	567.31	567.33
A3	59+83.69	-24.00	567.00	567.03
A4	59+93.84	-24.00	566.70	566.72
E End E Apr Pvt	60+03.98	-24.00	566.40	566.42

NORTH EDGE OF SOUTH LANE

Location	Station	Offset	Theoretical Grade Elevations	Theoretical Grade Elevations Adjusted for Grinding
W End E Apr Pvt	59+73.60	-12.00	567.94	567.96
A3	59+83.70	-12.00	567.63	567.65
A4	59+93.81	-12.00	567.32	567.34
E End E Apr Pvt	60+03.92	-12.00	567.02	567.04

PGL I-80 WB

Location	Station	Offset	Theoretical Grade Elevations	Theoretical Grade Elevations Adjusted for Grinding
W End E Apr Pvt	59+73.65	0.00	568.56	568.58
A3	59+83.71	0.00	568.25	568.27
A4	59+93.78	0.00	567.95	567.97
E End E Apr Pvt	60+03.85	0.00	567.65	567.67

INSIDE FACE OF SOUTH PARAPET

Location	Station	Offset	Theoretical Grade Elevations	Theoretical Grade Elevations Adjusted for Grinding
W End E Apr Pvt	59+73.69	12.00	568.32	568.34
A3	59+83.72	12.00	568.01	568.03
A4	59+93.75	12.00	567.71	567.73
E End E Apr Pvt	60+03.79	12.00	567.41	567.43

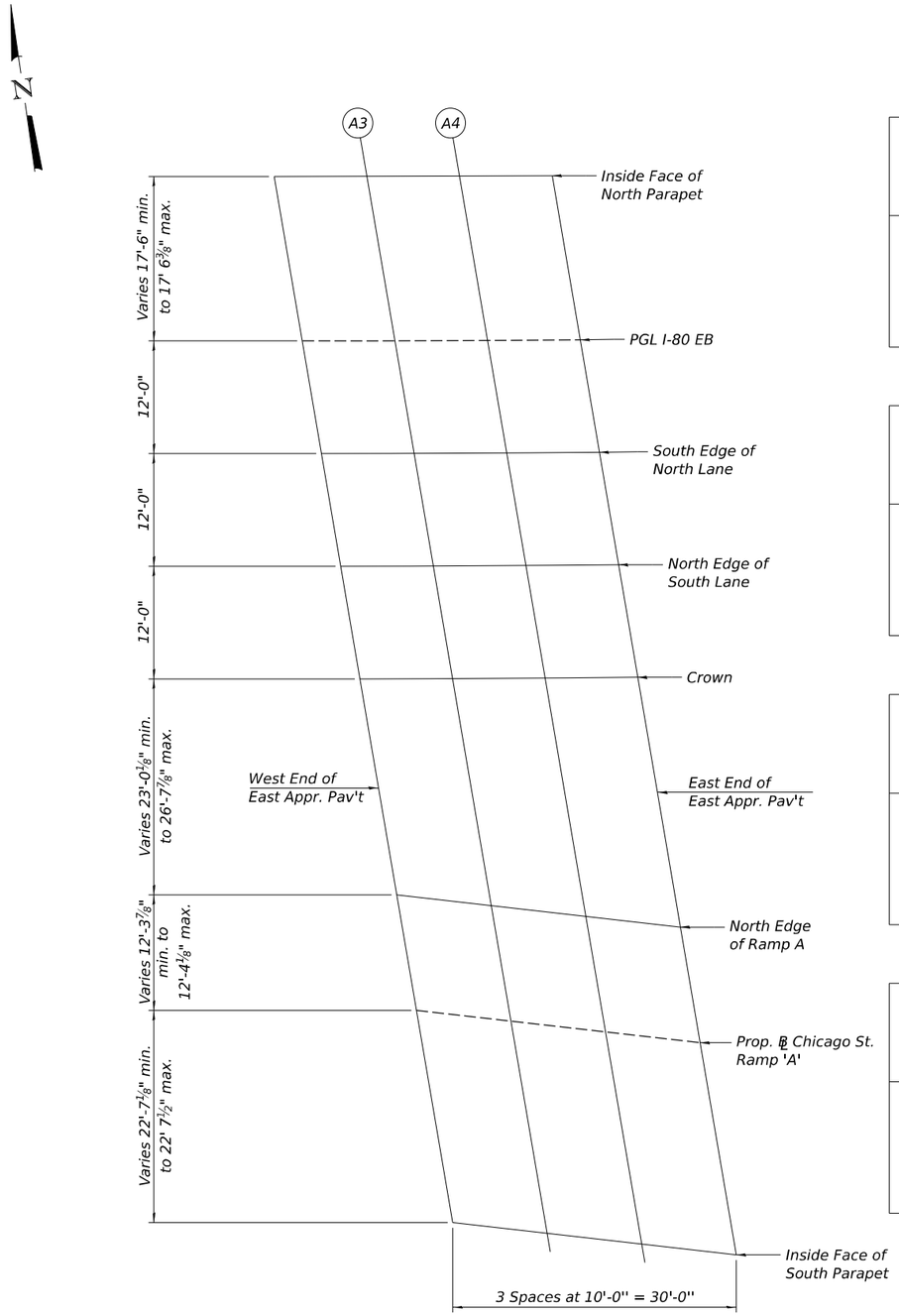

PLAN

East Approach (EB)

INSIDE FACE OF NORTH PARAPET

Location	Station	Offset	Theoretical Grade Elevations	Theoretical Grade Elevations Adjusted for Grinding
W End E Apr Pvt	59+75.62	-17.50	567.59	567.61
A3	59+85.62	-17.53	567.29	567.31
A4	59+95.61	-17.53	566.98	567.00
E End E Apr Pvt	60+05.22	-17.50	566.70	566.72

PGL I-80 EB

Location	Station	Offset	Theoretical Grade Elevations	Theoretical Grade Elevations Adjusted for Grinding
W End E Apr Pvt	59+78.72	0.00	568.40	568.42
A3	59+88.66	0.00	568.10	568.12
A4	59+98.60	0.00	567.80	567.82
E End E Apr Pvt	60+08.16	0.00	567.52	567.54

SOUTH EDGE OF NORTH LANE

Location	Station	Offset	Theoretical Grade Elevations	Theoretical Grade Elevations Adjusted for Grinding
W End E Apr Pvt	59+80.83	12.00	568.96	568.98
A3	59+90.73	12.00	568.67	568.69
A4	60+00.63	12.00	568.37	568.39
E End E Apr Pvt	60+10.15	12.00	568.09	568.11

NORTH EDGE OF SOUTH LANE

Location	Station	Offset	Theoretical Grade Elevations	Theoretical Grade Elevations Adjusted for Grinding
W End E Apr Pvt	59+82.92	24.00	569.53	569.55
A3	59+92.78	24.00	569.23	569.25
A4	60+02.65	24.00	568.93	568.95
E End E Apr Pvt	60+12.13	24.00	568.65	568.68

CROWN

Location	Station	Offset	Theoretical Grade Elevations	Theoretical Grade Elevations Adjusted for Grinding
W End E Apr Pvt	59+84.99	36.00	570.09	570.11
A3	59+94.82	36.00	569.79	569.81
A4	60+04.65	36.00	569.50	569.52
E End E Apr Pvt	60+14.09	36.00	569.22	569.24

NORTH EDGE OF RAMP A

Location	Station	Offset	Theoretical Grade Elevations	Theoretical Grade Elevations Adjusted for Grinding
W End E Apr Pvt	59+88.93	59.01	569.51	569.53
A3	59+98.62	60.17	569.19	569.21
A4	60+08.31	61.37	568.88	568.90
E End E Apr Pvt	60+18.40	62.65	568.56	568.59

℄ RAMP A

Location	Station	Offset	Theoretical Grade Elevations	Theoretical Grade Elevations Adjusted for Grinding
W End E Apr Pvt	59+91.01	71.33	569.16	569.18
A3	60+00.67	72.50	568.84	568.86
A4	60+10.32	73.71	568.54	568.56
E End E Apr Pvt	60+20.37	74.99	568.23	568.25

INSIDE FACE OF SOUTH PARAPET

Location	Station	Offset	Theoretical Grade Elevations	Theoretical Grade Elevations Adjusted for Grinding
W End E Apr Pvt	59+94.79	93.92	568.52	568.54
A3	60+04.38	95.11	568.21	568.23
A4	60+13.97	96.32	567.90	567.92
E End E Apr Pvt	60+23.95	97.62	567.69	567.71

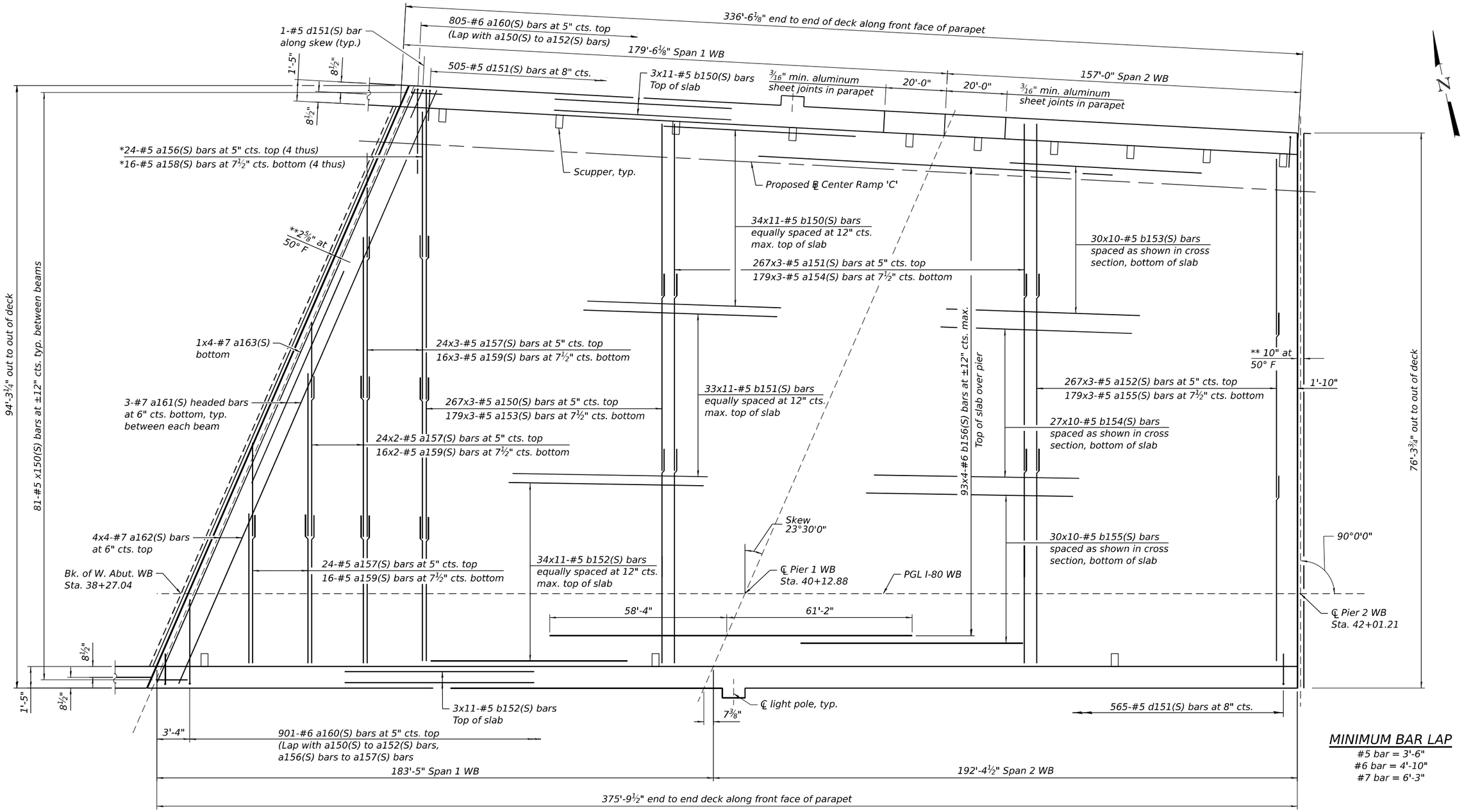

PLAN - UNIT 1 WB

MINIMUM BAR LAP

#5 bar = 3'-6"
#6 bar = 4'-10"
#7 bar = 6'-3"

* See Field Cutting Diagram on sheet S-104

** Dimension showing concrete opening. For joint opening and bars near joint see sheet S-153 and S-155

NOTES:

1. See sheet S-104 for superstructure details and Bill of Material.
2. Offsets for scupper and light pole locations are measured off of WB PGL.
3. Bars indicated thus, 32 x 2 - #5 etc. indicates 32 lines of bars with 2 lengths per line.
4. For Cross Section see sheet S-102.

MODEL: Default
FILE NAME: pw://transystems-pw.bentley.com:transyscorp-pw1-hosted/Documents/Projects_2018/CH401/401180022/03-WSP/CAD/62R23-RB-1/Sheets/Structural/0998309-62R23-S301-DK101.dgn

WSP USA Inc.
30 N. LASALLE STREET
SUITE 4200
CHICAGO, IL 60602
TEL: (312) 782-8150
FAX: (312) 782-1684

USER NAME = USSJ696614	DESIGNED - PK	REVISED -	
	CHECKED - LAS	REVISED -	
PLOT SCALE = 32.000 ' / in.	DRAWN - BK	REVISED -	
PLOT DATE = 11/5/2025	CHECKED - LAS	REVISED -	

STATE OF ILLINOIS
DEPARTMENT OF TRANSPORTATION

DECK PLAN - UNIT 1 WB
STRUCTURE NUMBER 099-8309 WB AND 099-8325 EB

SHEET S-101 OF S-333 SHEETS

F.A.I RTE.	SECTION	COUNTY	TOTAL SHEETS	SHEET NO.
I-80	FAI 80 21 STRUCTURE 2	WILL	1230	682
		CONTRACT NO. 62R23		
		ILLINOIS FED. AID PROJECT		

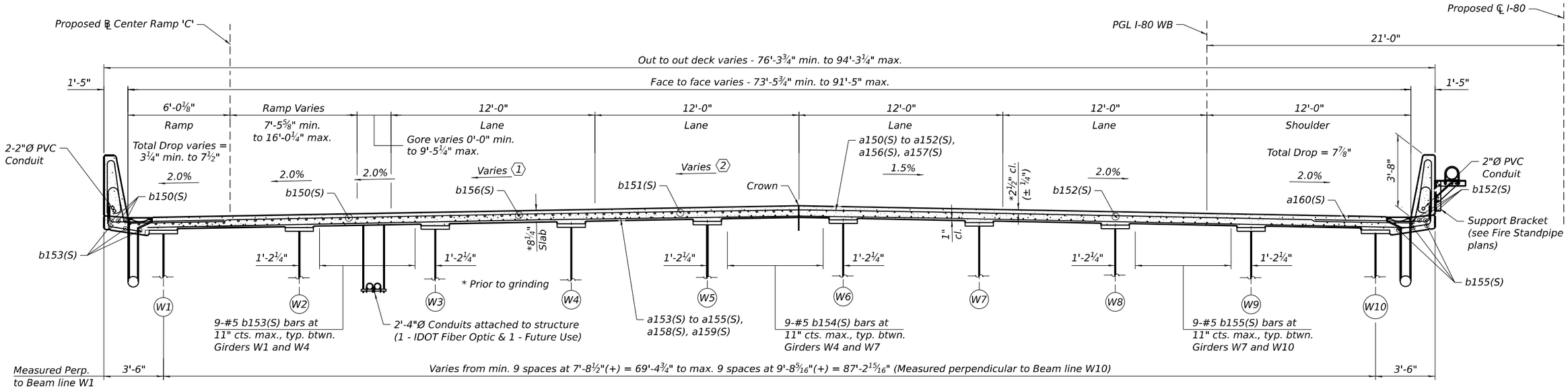

NEAR PIER

NEAR MIDSPAN

CROSS SECTION - UNIT 1 WB

(Looking East)

CROSS SLOPE TRANSITION DATA

Note: Positive (+) slopes upward from Lt. to Rt.,
Negative (-) slopes downward from Lt. to Rt.

1 Varies from -2.00% at Sta. 37+67 to +2.00% at Sta. 39+54

2 Varies from -2.00% at Sta. 37+67 to +1.50% at Sta. 39+32

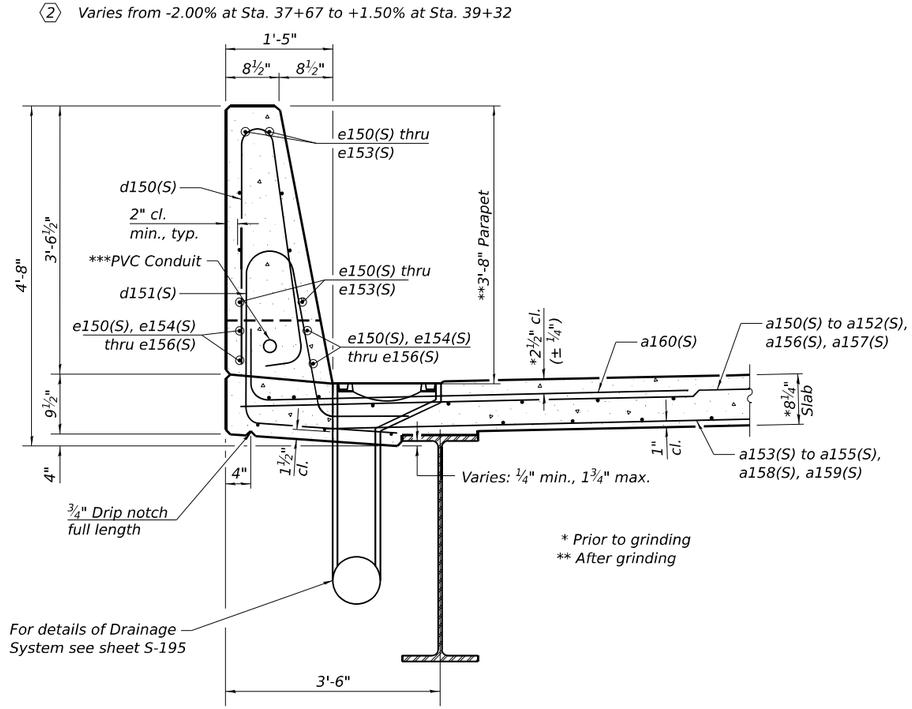

SECTION THRU PARAPET

***2-2" Dia. PVC Conduits Outside Parapet,
1-2" Dia. PVC Conduit Inside Parapet

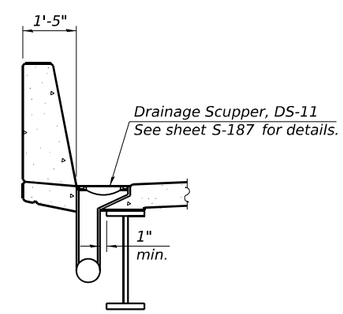

SECTION A-A

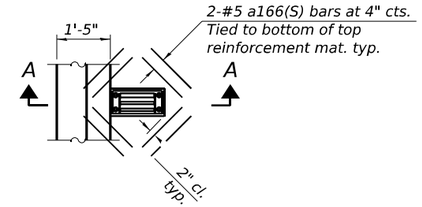

PLAN

Note:
Cut longitudinal reinforcement to
clear drainage scuppers.

REINFORCEMENT AT DRAINAGE SCUPPERS

MODEL: Default
FILE NAME: pw://transystems-pw.bentley.com:transyscorp-pw1-hosted/Documents/Projects_2018/CH401/401180022/03-WSP/CAD/62R23-RB-1/Sheets/Structural/0998309-62R23-S302-DK102.dgn

WSP USA Inc.
30 N. LASALLE STREET
SUITE 4200
CHICAGO, IL 60602
TEL: (312) 782-8150
FAX: (312) 782-1684

USER NAME = USSJ696614	DESIGNED - PK	REVISED -	
	CHECKED - LAS	REVISED -	
PLOT SCALE = 6.000 ' / in.	DRAWN - BK	REVISED -	
PLOT DATE = 11/5/2025	CHECKED - LAS	REVISED -	

STATE OF ILLINOIS
DEPARTMENT OF TRANSPORTATION

DECK CROSS SECTION AND PARAPET - UNIT 1 WB
STRUCTURE NUMBER 099-8309 WB AND 099-8325 EB

SHEET S-102 OF S-333 SHEETS

F.A.I RTE.	SECTION	COUNTY	TOTAL SHEETS	SHEET NO.
I-80	FAI 80 21 STRUCTURE 2	WILL	1230	683
		CONTRACT NO. 62R23		
	ILLINOIS	FED. AID PROJECT		

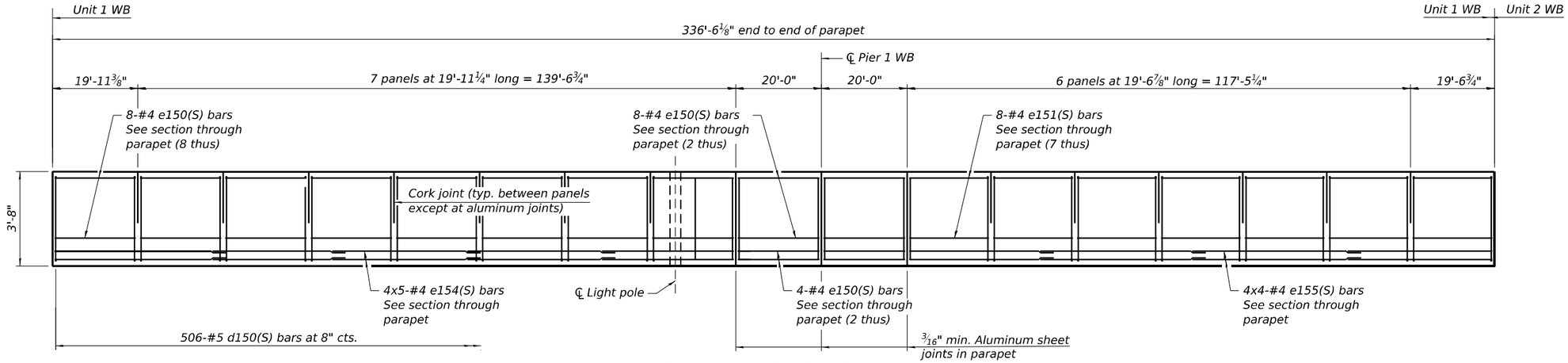

INSIDE ELEVATION OF NORTH PARAPET

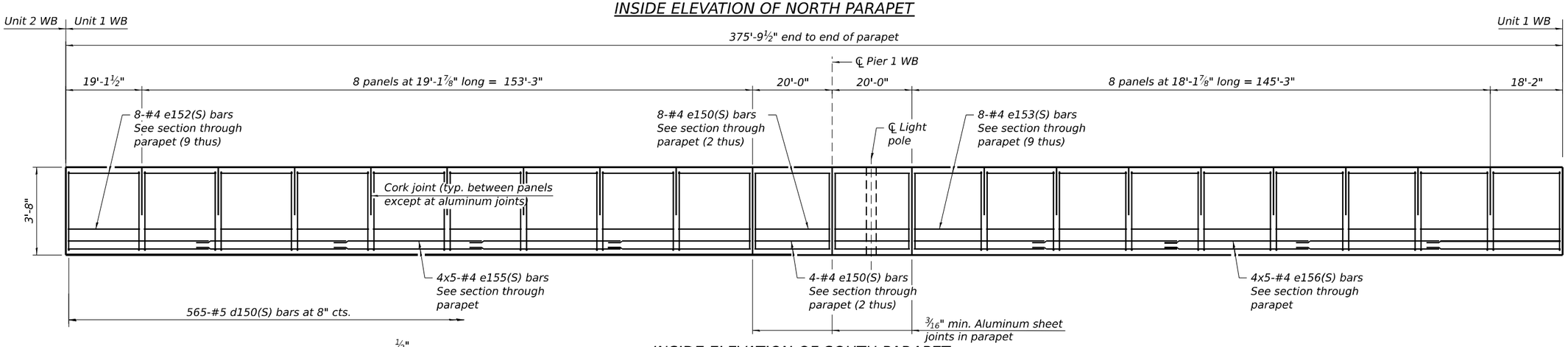

INSIDE ELEVATION OF SOUTH PARAPET

MINIMUM BAR LAP

#4 bar = 2'-5"

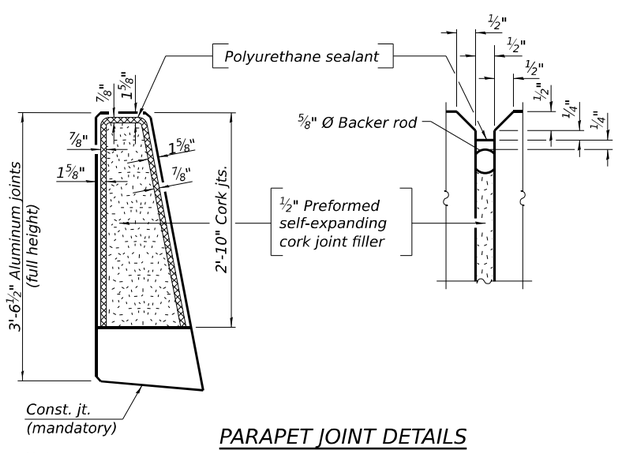

PARAPET JOINT DETAILS

Notes:

The 3/16" minimum aluminum sheet shall be ASTM B 209 alloy 3003-H14 and coated with 5 mils of either bitumen paint or epoxy paint to minimize reaction with wet concrete. Cost included with Concrete Superstructure.

The Polyurethane Sealant shall be according to Article 1050.04 of the Std. Spec. and the color shall be gray.

MODEL: Default
FILE NAME: pw://transystems-pw.bentley.com:transyscorp-pw1-hosted/Documents/Projects_2018/CH401/401180022/03-WSP/CAD/62R23-RB-1/Sheets/Structural/0998309-62R23-S303-DPC103.dgn

WSP USA Inc.
30 N. LASALLE STREET
SUITE 4200
CHICAGO, IL 60602
TEL: (312) 782-8150
FAX: (312) 782-1684

USER NAME = USSJ696614	DESIGNED - PK	REVISED -	
	CHECKED - LAS	REVISED -	
PLOT SCALE = 28.000 ' / in.	DRAWN - BK	REVISED -	
PLOT DATE = 11/5/2025	CHECKED - LAS	REVISED -	

STATE OF ILLINOIS
DEPARTMENT OF TRANSPORTATION

PARAPET ELEVATION - UNIT 1 WB
STRUCTURE NUMBER 099-8309 WB AND 099-8325 EB

SHEET S-103 OF S-333 SHEETS

F.A.I RTE.	SECTION	COUNTY	TOTAL SHEETS	SHEET NO.
I-80	FAI 80 21 STRUCTURE 2	WILL	1230	684
		CONTRACT NO. 62R23		
		ILLINOIS	FED. AID PROJECT	

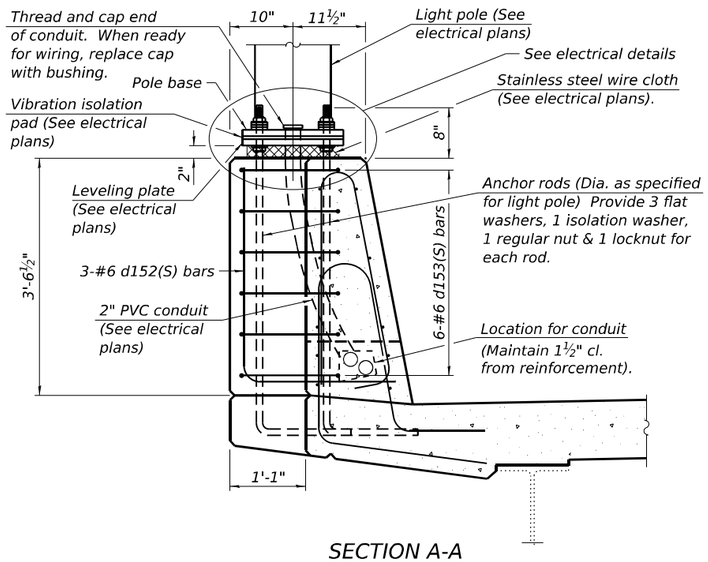

SECTION A-A

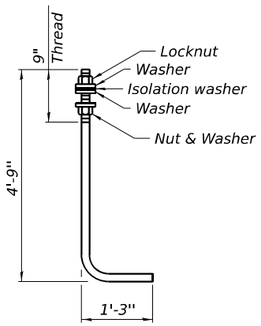

ANCHOR ROD

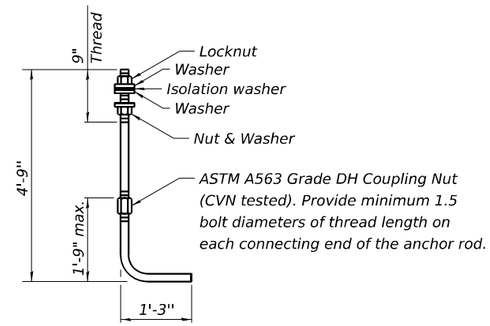

ALTERNATE ANCHOR ROD

Diameter as specified for light poles. (ASTM F 1554 Grade 105) Full length hot dipped galvanized.

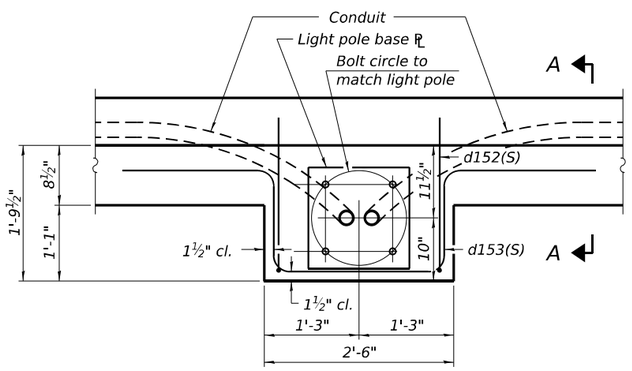

PLAN

Note:
Cost of anchor rods is included with Concrete Superstructure.

LIGHT POLE DETAILS

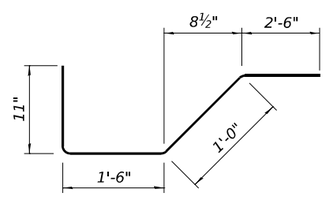

BAR x150(S)

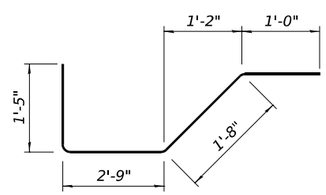

BAR x151(S)

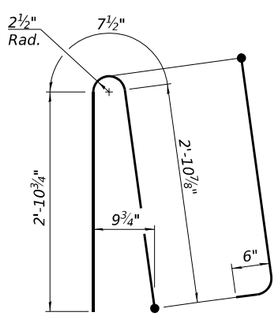

BAR d150(S)

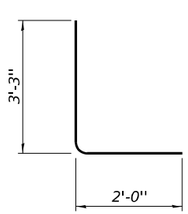

BAR d152(S)

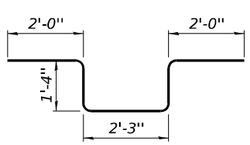

BAR d153(S)

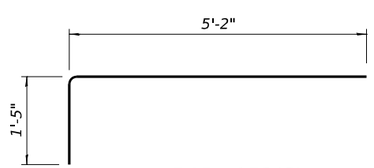

BAR x152(S)

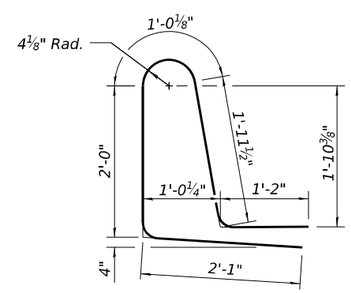

BAR d151(S)

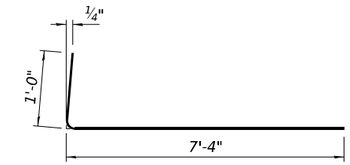

BAR a160(S)

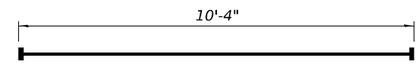

HEADED BAR a161(S)
(Headed. 54-#7 Bar terminators)

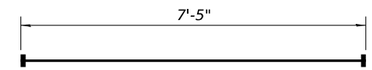

HEADED BAR a164(S)
(Headed. 18-#6 Bar terminators)

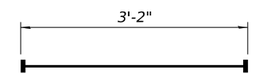

HEADED BAR a165(S)
(Headed. 4-#6 Bar terminators)

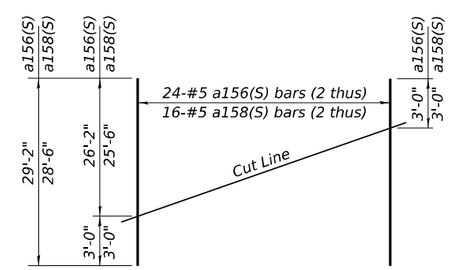

FIELD CUTTING DIAGRAM

Order a156(S) and a158(S) bars full length. Cut as shown and use remainder of bars as indicated on plan.

UNIT 1 WB
SUPERSTRUCTURE
BILL OF MATERIAL

Bar	No.	Size	Length	Shape
a150(S)	801	#5	33'-8"	
a151(S)	801	#5	31'-8"	
a152(S)	813	#5	29'-8"	
a153(S)	537	#5	32'-10"	
a154(S)	537	#5	30'-10"	
a155(S)	549	#5	28'-10"	
a156(S)	48	#5	29'-2"	
a157(S)	144	#5	26'-2"	
a158(S)	32	#5	28'-6"	
a159(S)	96	#5	25-6"	
a160(S)	1,706	#6	8'-4"	
a161(S)	27	#7	10'-4"	
a162(S)	16	#7	30'-3"	
a163(S)	4	#7	29'-8"	
a164(S)	9	#6	7'-5"	
a165(S)	2	#6	3'-2"	
a166(S)	104	#5	1'-6"	
b150(S)	407	#5	34'-11"	
b151(S)	363	#5	36'-2"	
b152(S)	407	#5	37'-5"	
b153(S)	300	#5	38'-2"	
b154(S)	270	#5	39'-5"	
b155(S)	300	#5	40'-10"	
b156(S)	372	#6	33'-6"	
d150(S)	1,071	#5	7'-0"	
d151(S)	1,071	#5	8'-3"	
d152(S)	6	#6	5'-3"	
d153(S)	12	#6	8'-11"	
e150(S)	112	#4	19'-7"	
e151(S)	56	#4	19'-3"	
e152(S)	72	#4	18'-10"	
e153(S)	72	#4	17'-10"	
e154(S)	20	#4	33'-10"	
e155(S)	36	#4	36'-5"	
e156(S)	20	#4	34'-7"	
x150(S)	81	#5	5'-11"	
x151(S)	87	#5	6'-10"	
x152(S)	106	#5	6'-7"	
Concrete Superstructure			Cu Yd.	924.4
Reinforcement Bars, Stainless Steel			Pound	288,000
Protective Coat			Sq. Yd.	3,615
Bridge Deck Grooving (Longitudinal)			Sq. Yd.	2,458
Diamond Grinding (Bridge Section)			Sq. Yd.	3,140

Note: Bar terminators paid for separately. See Total Bill of Materials.

WSP USA Inc.
30 N. LASALLE STREET
SUITE 4200
CHICAGO, IL 60602
TEL: (312) 782-8150
FAX: (312) 782-1684

USER NAME = USSJ696614	DESIGNED - PK	REVISED -	
	CHECKED - LAS	REVISED -	
PLOT SCALE = 6.000 ' / in.	DRAWN - BK	REVISED -	
PLOT DATE = 11/5/2025	CHECKED - LAS	REVISED -	

STATE OF ILLINOIS
DEPARTMENT OF TRANSPORTATION

SUPERSTRUCTURE DETAILS - UNIT 1 WB
STRUCTURE NUMBER 099-8309 WB AND 099-8325 EB

SHEET S-104 OF S-333 SHEETS

F.A.I RTE.	SECTION	COUNTY	TOTAL SHEETS	SHEET NO.
I-80	FAI 80 21 STRUCTURE 2	WILL	1230	685
		CONTRACT NO. 62R23		
		ILLINOIS	FED. AID PROJECT	

MODEL: Default
FILE NAME: pw://transystems-pw.bentley.com:transyscorp-pw1-hosted/Documents/Projects_2018/CH401/401180022/03-WSP/CAD/62R23-RB-1/Sheets/Structural/0998309-62R23-S304-DK104.dgn

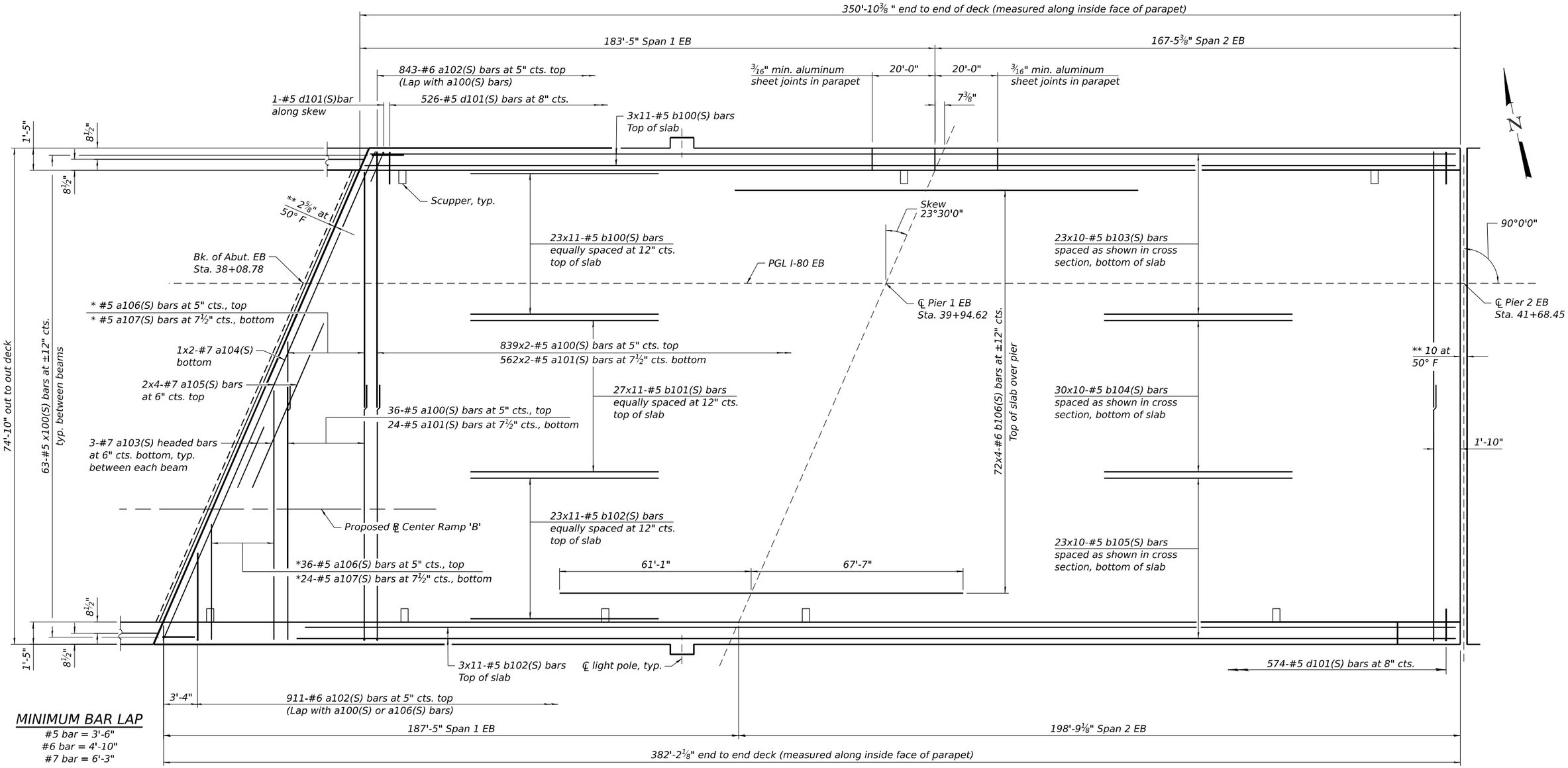

MINIMUM BAR LAP

#5 bar = 3'-6"
#6 bar = 4'-10"
#7 bar = 6'-3"

PLAN - UNIT 1 EB

NOTES:

1. See sheet S-108 for superstructure details and Bill of Material.
2. Offsets for scupper and light pole locations are measured off of EB PGL.
3. Bars indicated thus, 32 x 2 - #5 etc. indicates 32 lines of bars with 2 lengths per line.
4. For Cross Section see sheet S-106.

* See Field Cutting Diagram on sheet S-108

** Dimension showing concrete opening. For joint opening and bars near joint see sheet S-154 and S-156

WSP USA Inc.
30 N. LASALLE STREET
SUITE 4200
CHICAGO, IL 60602
TEL: (312) 782-8150
FAX: (312) 782-1684

USER NAME = USSJ696614	DESIGNED - PK	REVISED -	
	CHECKED - LAS	REVISED -	
PLOT SCALE = 32.000 ' / in.	DRAWN - BK	REVISED -	
PLOT DATE = 11/5/2025	CHECKED - LAS	REVISED -	

STATE OF ILLINOIS
DEPARTMENT OF TRANSPORTATION

DECK PLAN - UNIT 1 EB
STRUCTURE NUMBER 099-8309 WB AND 099-8325 EB

SHEET S-105 OF S-333 SHEETS

F.A.I RTE.	SECTION	COUNTY	TOTAL SHEETS	SHEET NO.
I-80	FAI 80 21 STRUCTURE 2	WILL	1230	686
		CONTRACT NO. 62R23		
		ILLINOIS	FED. AID PROJECT	

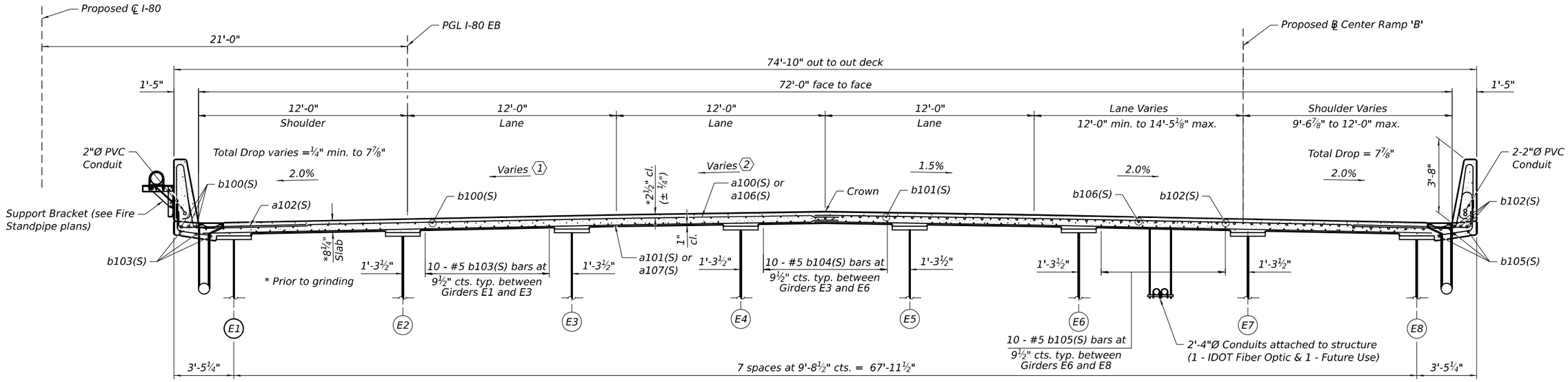

NEAR MIDSPAN

NEAR PIER

CROSS SECTION - UNIT 1 EB

(Looking East)

CROSS SLOPE TRANSITION DATA

Note: Positive (+) slopes upward from Lt. to Rt.,
Negative (-) slopes downward from Lt. to Rt.

1 Varies from -2.00% at Sta. 37+63 to +2.00% at Sta. 39+51

2 Varies from -2.00% at Sta. 37+63 to +1.50% at Sta. 39+28

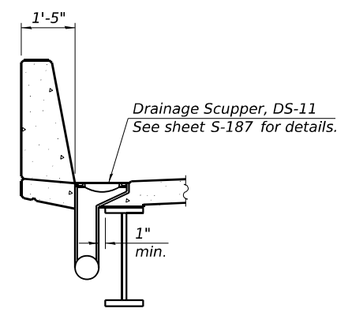

SECTION A-A

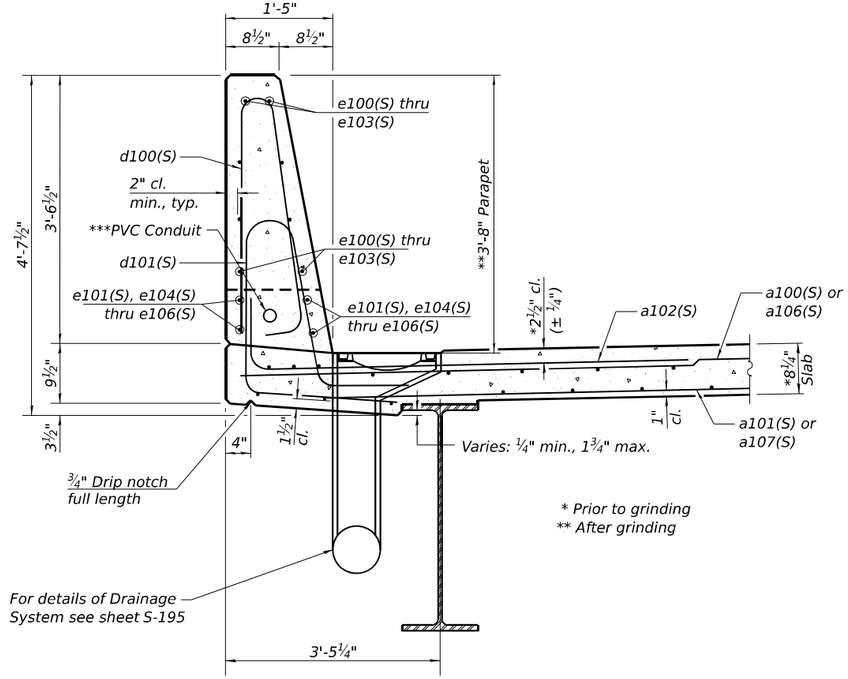

SECTION THRU PARAPET

***2-2" Dia. PVC Conduits Outside Parapet,
1-2" Dia. PVC Conduit Inside Parapet

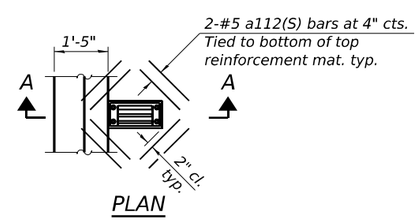

PLAN

Note:
Cut longitudinal reinforcement to clear drainage scuppers.

REINFORCEMENT AT DRAINAGE SCUPPERS

MODEL: Default
FILE NAME: pw://transystems-pw.bentley.com:transyscorp-pw1-hosted/Documents/Projects_2018/CH401/40118002/03-WSP/CAD/62R23-RB-1/Sheets/Structural/0998309-62R23-S106-DK106.dgn

WSP USA Inc.
30 N. LASALLE STREET
SUITE 4200
CHICAGO, IL 60602
TEL: (312) 782-8150
FAX: (312) 782-1684

USER NAME = USSJ696614	DESIGNED - PK	REVISED -	
	CHECKED - LAS	REVISED -	
PLOT SCALE = 6,000 ' / in.	DRAWN - BK	REVISED -	
PLOT DATE = 11/5/2025	CHECKED - LAS	REVISED -	

STATE OF ILLINOIS
DEPARTMENT OF TRANSPORTATION

DECK CROSS SECTION AND PARAPET - UNIT 1 EB
STRUCTURE NUMBER 099-8309 WB AND 099-8325 EB

SHEET S-106 OF S-333 SHEETS

F.A.I RTE.	SECTION	COUNTY	TOTAL SHEETS	SHEET NO.
I-80	FAI 80 21 STRUCTURE 2	WILL	1230	687
		CONTRACT NO. 62R23		
	ILLINOIS	FED. AID PROJECT		

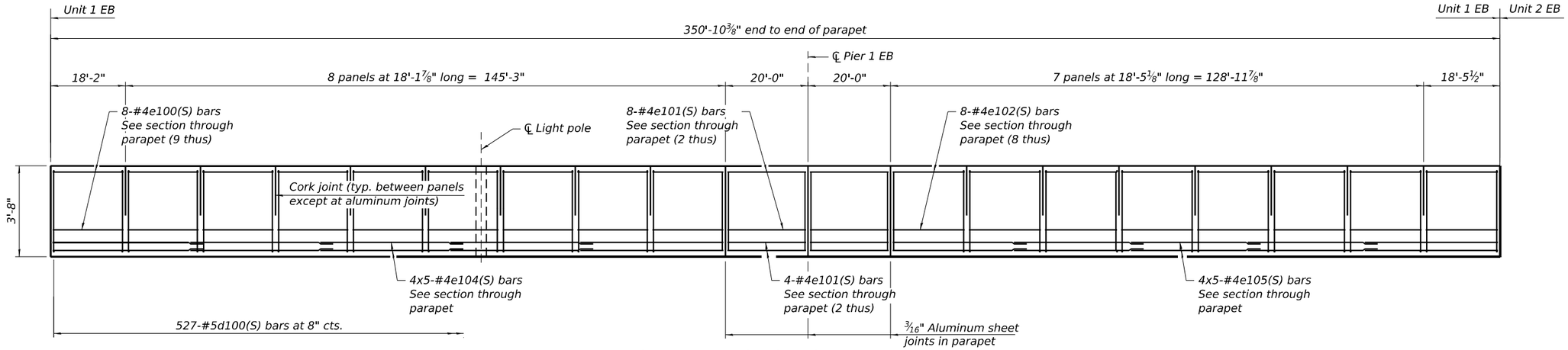

INSIDE ELEVATION OF NORTH PARAPET

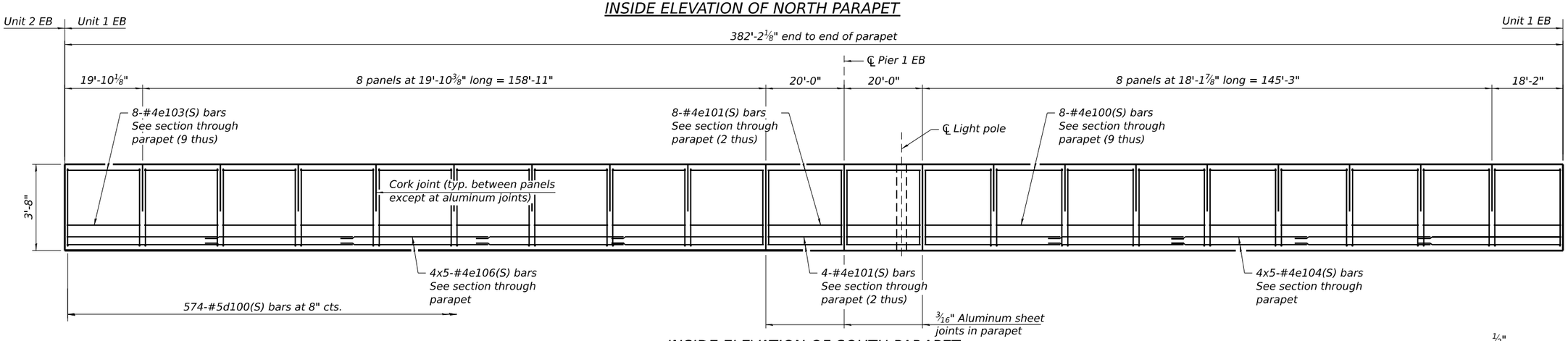

INSIDE ELEVATION OF SOUTH PARAPET

MINIMUM BAR LAP

#4 bar = 2'-5"

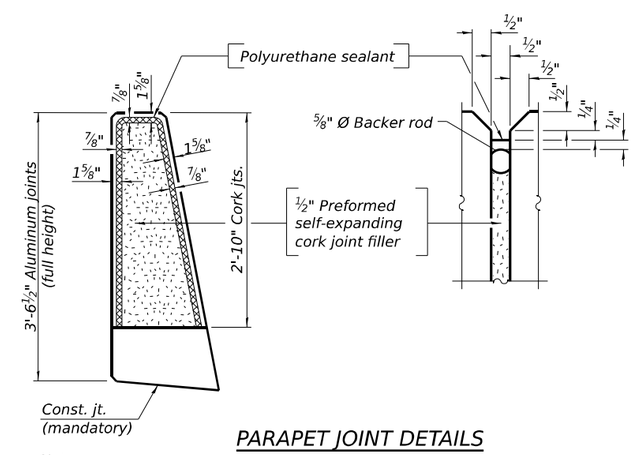

PARAPET JOINT DETAILS

Notes:

The 3/16" minimum aluminum sheet shall be ASTM B 209 alloy 3003-H14 and coated with 5 mils of either bitumen paint or spray paint to minimize reaction with wet concrete. Cost included with Concrete Superstructure.

The Polyurethane Sealant shall be according to Article 1050.04 of the Std. Spec. and the color shall be gray.

MODEL: Default
FILE NAME: pw://transystems-pw.bentley.com:transyscorp-pw1-hosted/Documents/Projects_2018/CH401/401180022/03-WSP/CAD/62R23-RB-1/Sheets/Structural/0998309-62R23-S307-2PC107.dgn

WSP USA Inc.
30 N. LASALLE STREET
SUITE 4200
CHICAGO, IL 60602
TEL: (312) 782-8150
FAX: (312) 782-1684

USER NAME = USSJ696614	DESIGNED - PK	REVISED -	
	CHECKED - LAS	REVISED -	
PLOT SCALE = 28.000 ' / in.	DRAWN - BK	REVISED -	
PLOT DATE = 11/5/2025	CHECKED - LAS	REVISED -	

STATE OF ILLINOIS
DEPARTMENT OF TRANSPORTATION

PARAPET ELEVATION - UNIT 1 EB
STRUCTURE NUMBER 099-8309 WB AND 099-8325 EB

SHEET S-107 OF S-333 SHEETS

F.A.I RTE.	SECTION	COUNTY	TOTAL SHEETS	SHEET NO.
I-80	FAI 80 21 STRUCTURE 2	WILL	1230	688
		CONTRACT NO. 62R23		
		ILLINOIS	FED. AID PROJECT	

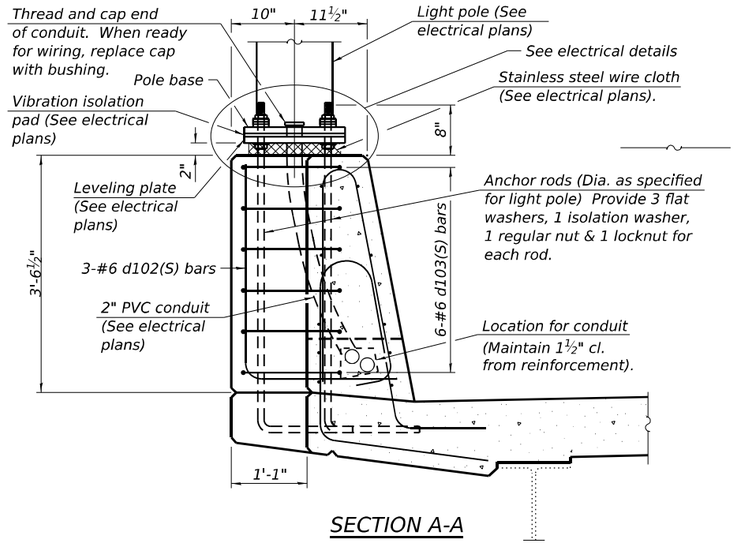

SECTION A-A

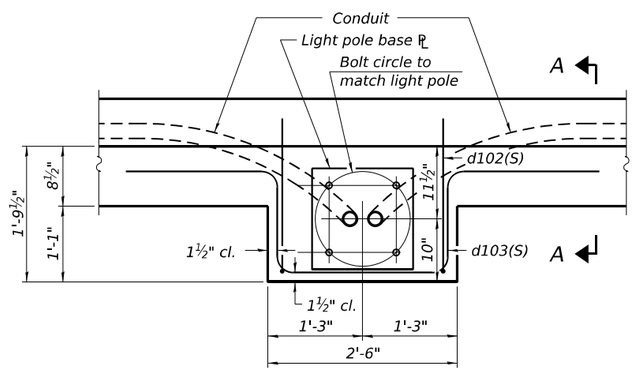

PLAN

Note:
Cost of anchor rods is included with Concrete Superstructure.

LIGHT POLE DETAILS

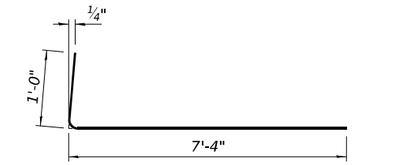

BAR a102(S)

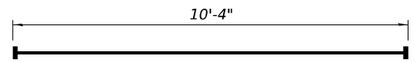

HEADED BAR a103(S)
(Headed. 42-#7 Bar terminators)

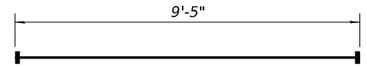

HEADED BAR a109(S)
(Headed. 14-#6 Bar terminators)

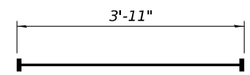

HEADED BAR a110(S)
(Headed. 4-#6 Bar terminators)

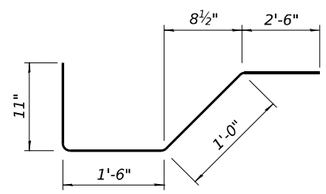

BAR x100(S)

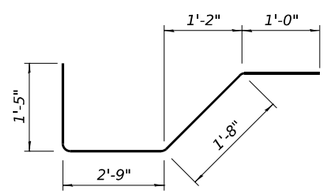

BAR x101(S)

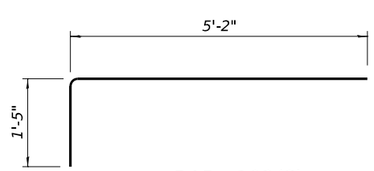

BAR x102(S)

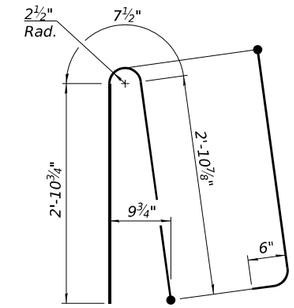

BAR d100(S)

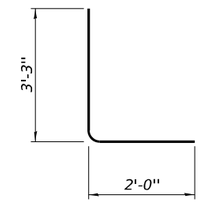

BAR d102(S)

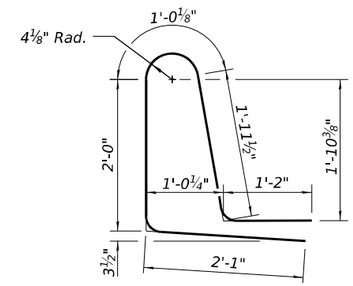

BAR d101(S)

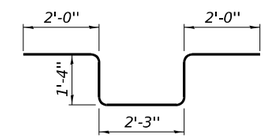

BAR d103(S)

UNIT 1 EB SUPERSTRUCTURE BILL OF MATERIAL

Bar	No.	Size	Length	Shape
a100(S)	1,714	#5	39'-0"	
a101(S)	1,148	#5	37'-9"	
a102(S)	1,754	#6	8'-4"	
a103(S)	21	#7	10'-4"	
a104(S)	2	#7	42'-5"	
a105(S)	8	#7	43'-9"	
a106(S)	36	#5	42'-2"	
a107(S)	24	#5	40'-9"	
a108(S)	8	#6	39'-8"	
a109(S)	7	#6	9'-5"	
a110(S)	2	#6	3'-11"	
a111(S)	8	#6	39'-8"	
a112(S)	64	#5	1'-6"	
b100(S)	286	#5	36'-0"	
b101(S)	297	#5	37'-0"	
b102(S)	286	#5	37'-11"	
b103(S)	230	#5	39'-3"	
b104(S)	300	#5	40'-4"	
b105(S)	230	#5	41'-4"	
b106(S)	288	#6	35'-10"	
d100(S)	1,101	#5	7'-0"	
d101(S)	1,101	#5	8'-3"	
d102(S)	6	#6	5'-3"	
d103(S)	12	#6	8'-11"	
e100(S)	144	#4	17'-10"	
e101(S)	48	#4	19'-8"	
e102(S)	64	#4	18'-1"	
e103(S)	72	#4	19'-6"	
e104(S)	40	#4	34'-7"	
e105(S)	20	#4	31'-5"	
e106(S)	20	#4	37'-8"	
x100(S)	63	#5	5'-11"	
x101(S)	69	#5	6'-10"	
x102(S)	78	#5	6'-7"	
Concrete Superstructure			Cu Yd.	846.1
Reinforcement Bars, Stainless Steel			Pound	247,980
Protective Coat			Sq. Yd.	3,294
Bridge Deck Grooving (Longitudinal)			Sq. Yd.	1,975
Diamond Grinding (Bridge Section)			Sq. Yd.	2,783

Note: Bar terminators paid for separately. See Total Bill of Materials.

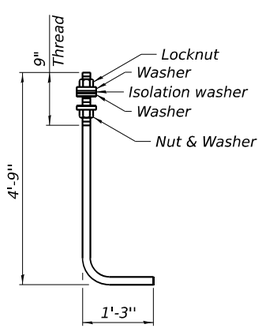

ANCHOR ROD

Diameter as specified for light poles. (ASTM F 1554 Grade 105) Full length hot dipped galvanized.

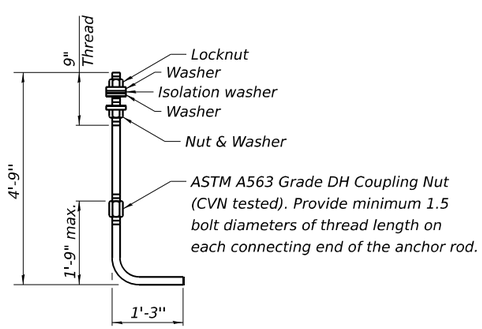

ALTERNATE ANCHOR ROD

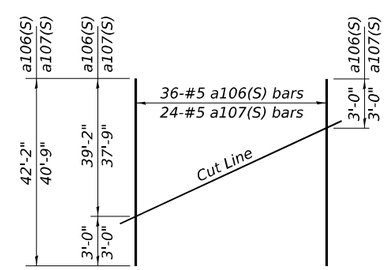

FIELD CUTTING DIAGRAM

Order a106(S) and a107(S) bars full length. Cut as shown and use remainder of bars in opposite end of deck.

MODEL: Default
FILE NAME: pw://transystems-pw.bentley.com:transyscorp-pw1-hosted/Documents/Projects_2018/CH401/401180022/03-WSP/CAD/62R23-RB-1/Sheets/Structural/0998309-62R23-S308-DP108.dgn

WSP USA Inc.
30 N. LASALLE STREET
SUITE 4200
CHICAGO, IL 60602
TEL: (312) 782-8150
FAX: (312) 782-1684

USER NAME = USSJ696614	DESIGNED - PK	REVISED -	
	CHECKED - LAS	REVISED -	
PLOT SCALE = 6.000 ' / in.	DRAWN - BK	REVISED -	
PLOT DATE = 11/5/2025	CHECKED - LAS	REVISED -	

STATE OF ILLINOIS
DEPARTMENT OF TRANSPORTATION

SUPERSTRUCTURE DETAILS - UNIT 1 EB
STRUCTURE NUMBER 099-8309 WB AND 099-8325 EB

SHEET S-108 OF S-333 SHEETS

F.A.I RTE.	SECTION	COUNTY	TOTAL SHEETS	SHEET NO.
I-80	FAI 80 21 STRUCTURE 2	WILL	1230	689
		CONTRACT NO. 62R23		
		ILLINOIS	FED. AID PROJECT	

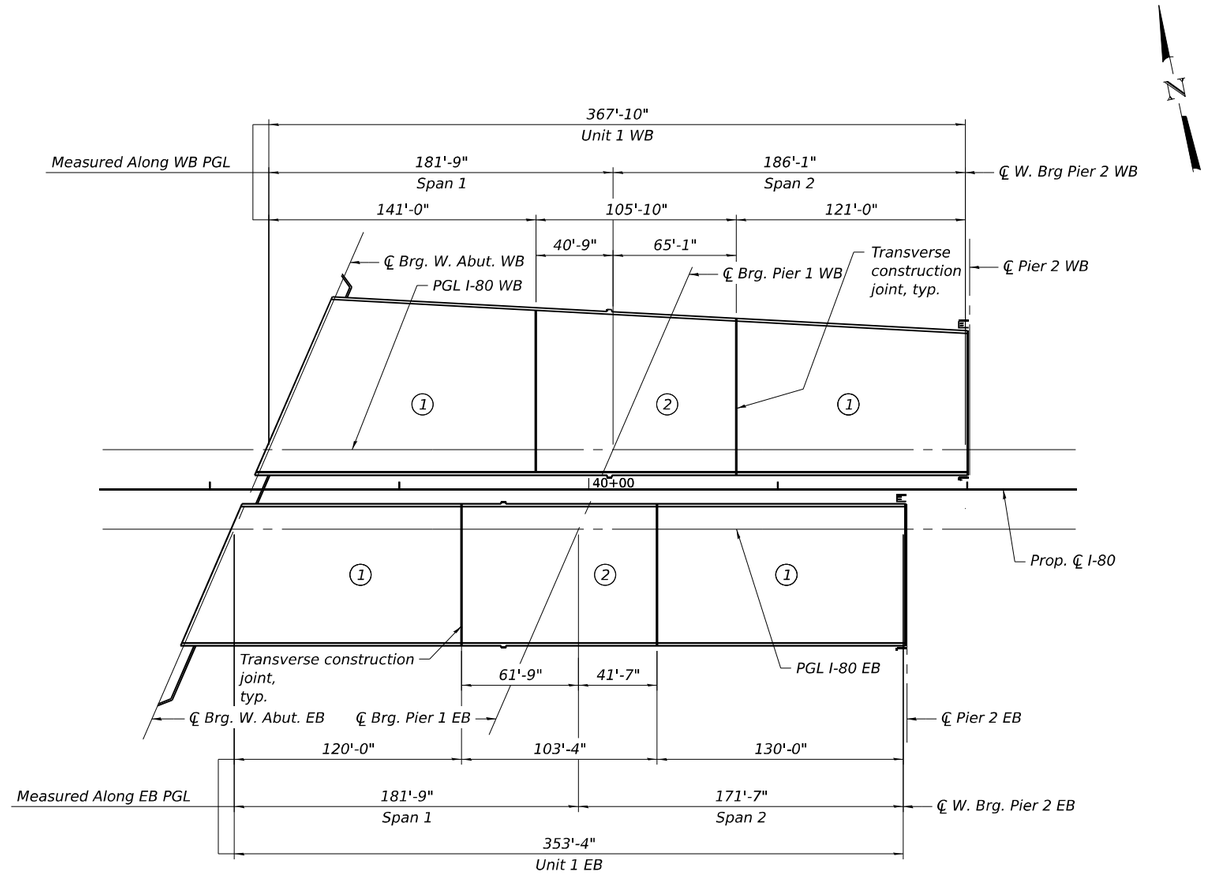

DECK POURING SEQUENCE - UNIT 1

NOTES ON DECK POURING SEQUENCE:

1. When the deck pour is stopped for the day at one or more of the transverse bonded construction joints in the deck pouring sequence as shown, the next pour shall not be made until both of the following are met:
   a. At least 72 hours shall have elapsed from the end of the previous pour.
   b. The concrete strength shall have attained a minimum flexural strength of 675 psi or a minimum compressive strength of 4000 psi.

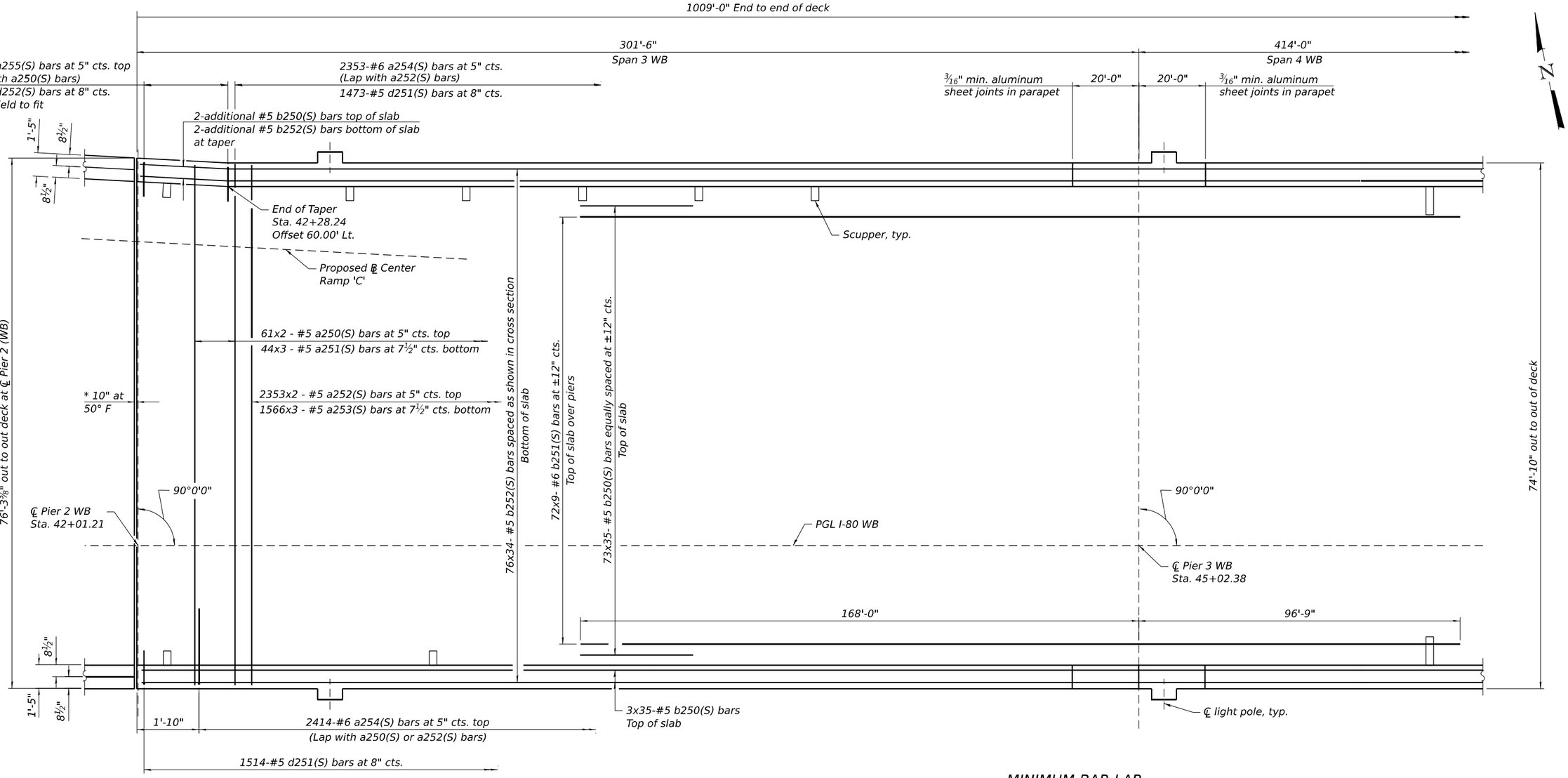

PARTIAL PLAN - UNIT 2 WB

MINIMUM BAR LAP

#5 bar = 3'-6"
#6 bar = 4'-10"

* Dimension showing concrete opening. For joint opening and bars near joint see sheet S-155

NOTES:

1. See sheet S-116 for superstructure details and Bill of Material.
2. Offsets for scupper and light pole locations are measured off of WB PGL.
3. Bars indicated thus, 32 x 2 - #5 etc. indicates 32 lines of bars with 2 lengths per line.
4. For Cross Section see sheet S-113.

WSP USA Inc.
30 N. LASALLE STREET
SUITE 4200
CHICAGO, IL 60602
TEL: (312) 782-8150
FAX: (312) 782-1684

USER NAME = USSJ696614	DESIGNED - PK	REVISED -	
	CHECKED - LAS	REVISED -	
PLOT SCALE = 32.000 ' / in.	DRAWN - BK	REVISED -	
PLOT DATE = 11/5/2025	CHECKED - LAS	REVISED -	

STATE OF ILLINOIS
DEPARTMENT OF TRANSPORTATION

DECK PLAN 1 - UNIT 2 WB
STRUCTURE NUMBER 099-8309 WB AND 099-8325 EB

SHEET S-110 OF S-333 SHEETS

F.A.I RTE.	SECTION	COUNTY	TOTAL SHEETS	SHEET NO.
I-80	FAI 80 21 STRUCTURE 2	WILL	1230	691
		CONTRACT NO. 62R23		
	ILLINOIS	FED. AID PROJECT		

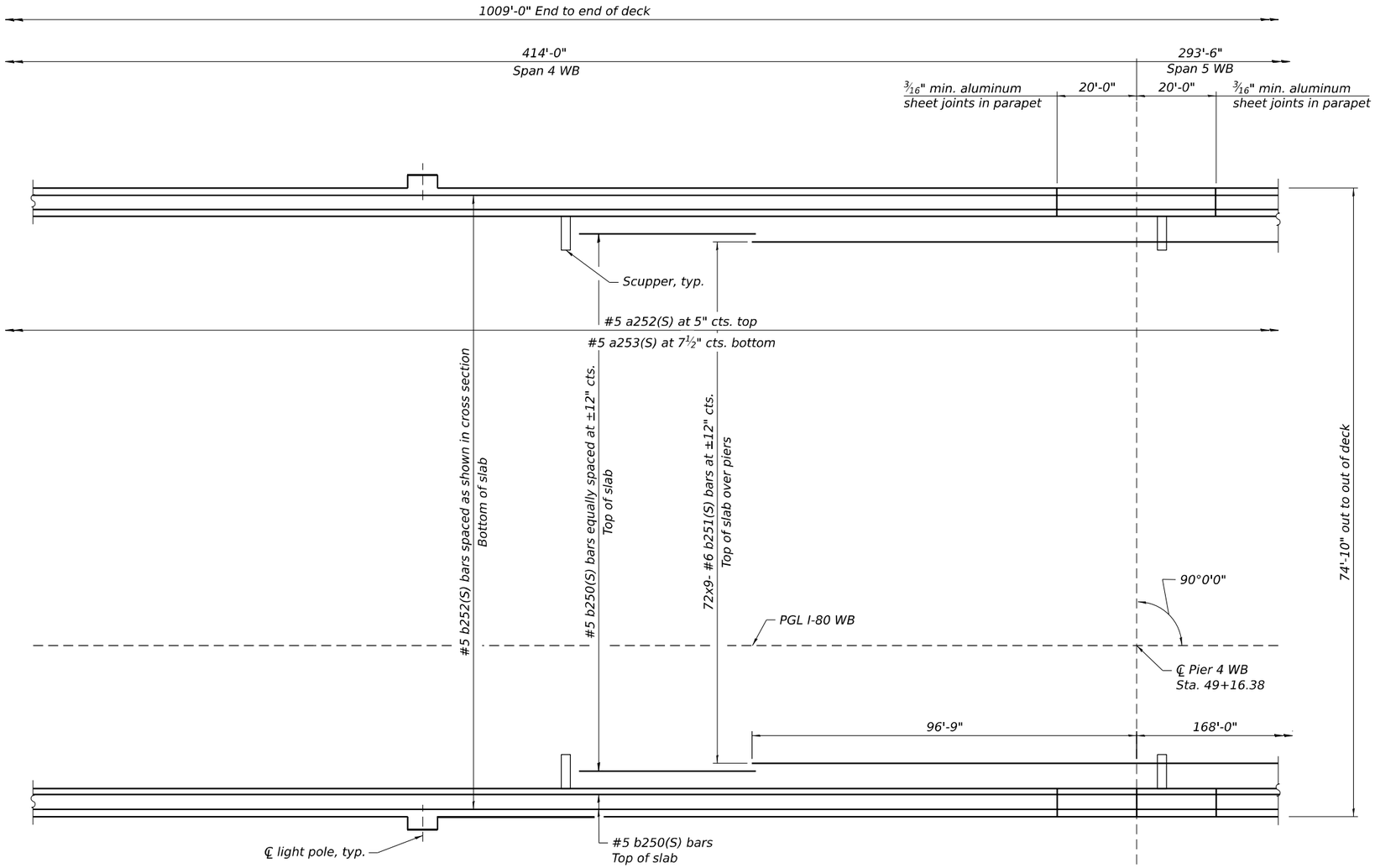

PARTIAL PLAN - UNIT 2 WB

MINIMUM BAR LAP

#5 bar = 3'-6"
#6 bar = 4'-10"

NOTES:

1. See sheet S-116 for superstructure details and Bill of Material.
2. Bars indicated thus, 32 x 2 - #5 etc. indicates 32 lines of bars with 2 lengths per line.
3. For Cross Section see sheet S-113.

MODEL: Default
FILE NAME: pw://transystems-pw.bentley.com:transyscorp-pw1-hosted/Documents/Projects_2018/CH401/401180022/03-WSP/CAD/62R23-RB-1/Sheets/Structural/0998309-62R23-S311-DK202.dgn

WSP USA Inc.
30 N. LASALLE STREET
SUITE 4200
CHICAGO, IL 60602
TEL: (312) 782-8150
FAX: (312) 782-1684

USER NAME = USSJ696614	DESIGNED - PK	REVISED -	
	CHECKED - LAS	REVISED -	
PLOT SCALE = 32.000 ' / in.	DRAWN - BK	REVISED -	
PLOT DATE = 11/5/2025	CHECKED - LAS	REVISED -	

STATE OF ILLINOIS
DEPARTMENT OF TRANSPORTATION

DECK PLAN 2 - UNIT 2 WB
STRUCTURE NUMBER 099-8309 WB AND 099-8325 EB

SHEET S-111 OF S-333 SHEETS

F.A.I RTE.	SECTION	COUNTY	TOTAL SHEETS	SHEET NO.
I-80	FAI 80 21 STRUCTURE 2	WILL	1230	692
		CONTRACT NO. 62R23		
		ILLINOIS	FED. AID PROJECT	

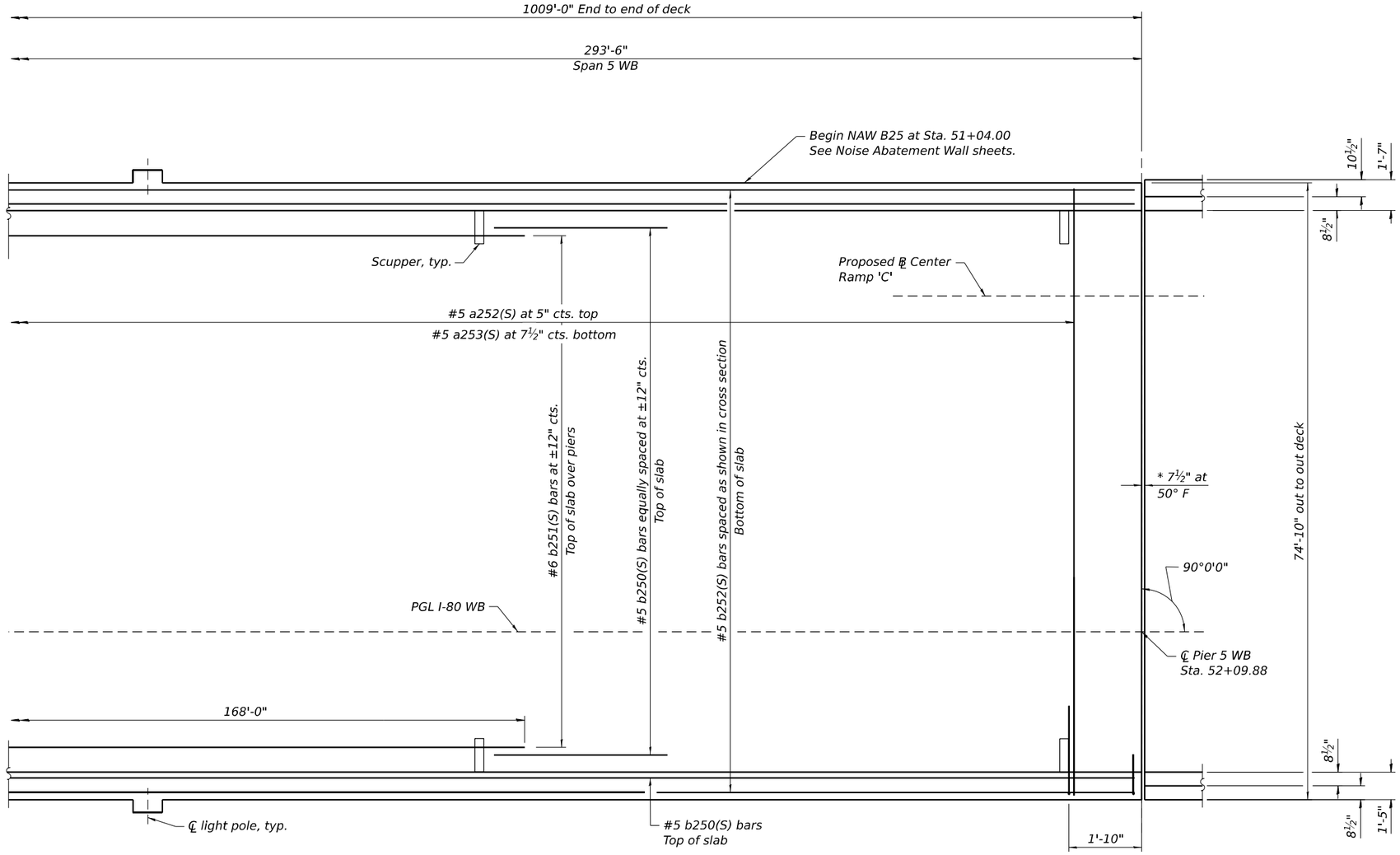

PARTIAL PLAN - UNIT 2 WB

MINIMUM BAR LAP

#5 bar = 3'-6"
#6 bar = 4'-10"

* Dimension showing concrete opening. For joint opening and bars near joint see sheet S-157

NOTES:

1. See sheet S-116 for superstructure details and Bill of Material.
2. Bars indicated thus, 32 x 2 - #5 etc. indicates 32 lines of bars with 2 lengths per line.
3. For Cross Section see sheet S-113.

MODEL: Default
FILE NAME: pw://transystems-pw.bentley.com:transyscorp-pw1-hosted/Documents/Projects_2018/CH401/401180022/03-WSP/CAD/62R23-RB-1/Sheets/Structural/0998309-62R23-S312-DH203.dgn

WSP USA Inc.
30 N. LASALLE STREET
SUITE 4200
CHICAGO, IL 60602
TEL: (312) 782-8150
FAX: (312) 782-1684

USER NAME = USSJ696614	DESIGNED - PK	REVISED -	
	CHECKED - LAS	REVISED -	
PLOT SCALE = 32.000 ' / in.	DRAWN - BK	REVISED -	
PLOT DATE = 11/5/2025	CHECKED - LAS	REVISED -	

STATE OF ILLINOIS
DEPARTMENT OF TRANSPORTATION

DECK PLAN 3 - UNIT 2 WB
STRUCTURE NUMBER 099-8309 WB AND 099-8325 EB

SHEET S-112 OF S-333 SHEETS

F.A.I RTE.	SECTION	COUNTY	TOTAL SHEETS	SHEET NO.
I-80	FAI 80 21 STRUCTURE 2	WILL	1230	693
		CONTRACT NO. 62R23		
	ILLINOIS	FED. AID PROJECT		

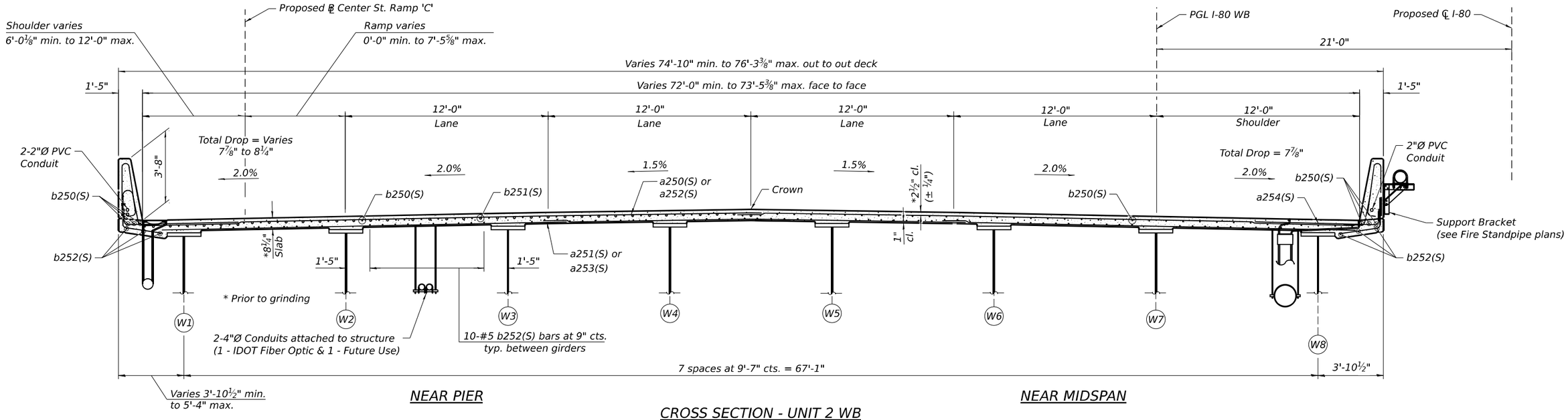

CROSS SECTION - UNIT 2 WB

(Looking East)

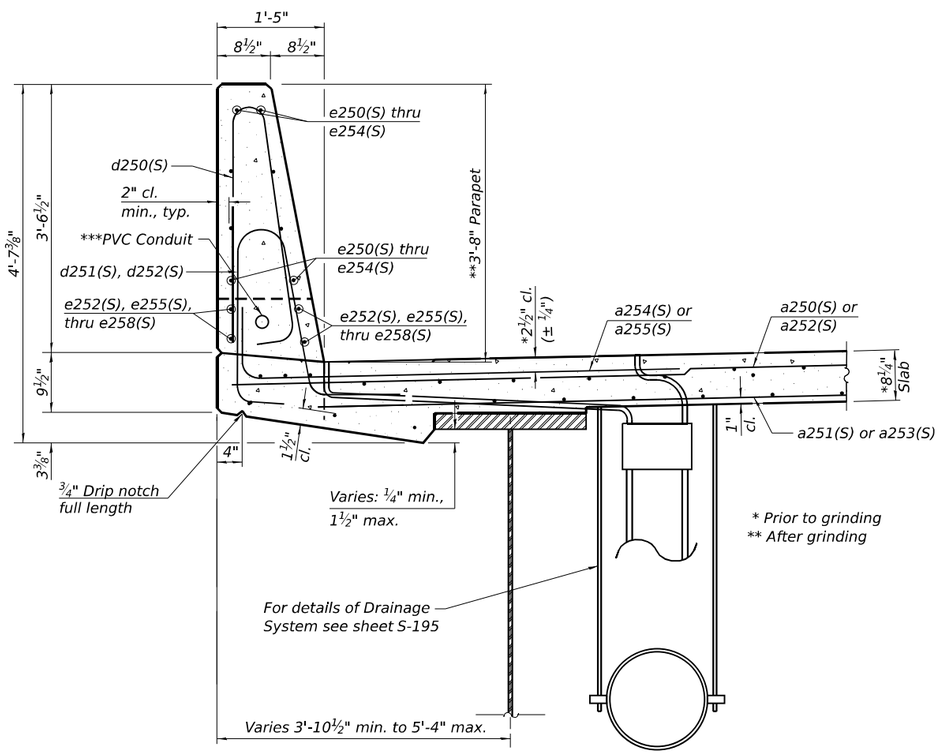

SECTION THRU PARAPET

Drainage Scuppers (Special) shown, Drainage Scupper , DS-11 similar
***2-2" Dia. PVC Conduits Outside Parapet,
1-2" Dia. PVC Conduit Inside Parapet

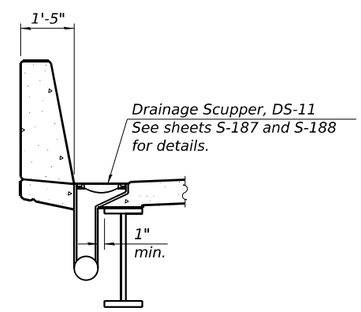

SECTION A-A

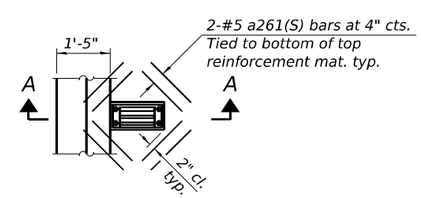

PLAN

Drainage Scupper, DS-11 shown,
Drainage Scuppers (Special), see sheet S-126

Note:
Cut longitudinal reinforcement to clear drainage scuppers.

REINFORCEMENT AT DRAINAGE SCUPPERS

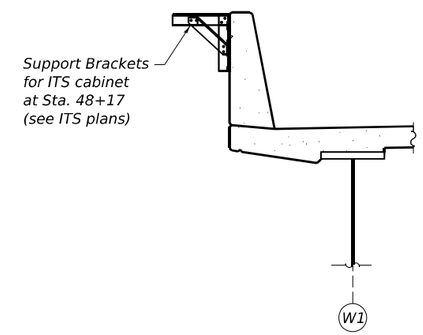

DETAIL AT ITS CABINET

MODEL: Default
FILE NAME: pw://transystems-pw.bentley.com:transyscorp-pw1-hosted/Documents/Projects_2018/CH401/401186022/03-WSP/CAD/62R23-RB-1/Sheets/Structural/0998309-62R23-S313-DK204.dgn

WSP USA Inc.
30 N. LASALLE STREET
SUITE 4200
CHICAGO, IL 60602
TEL: (312) 782-8150
FAX: (312) 782-1684

USER NAME = USSJ696614	DESIGNED - PK	REVISED -	
	CHECKED - LAS	REVISED -	
PLOT SCALE = 6.000 ' / in.	DRAWN - BK	REVISED -	
PLOT DATE = 11/5/2025	CHECKED - LAS	REVISED -	

STATE OF ILLINOIS
DEPARTMENT OF TRANSPORTATION

DECK CROSS SECTION AND PARAPET - UNIT 2 WB
STRUCTURE NUMBER 099-8309 WB AND 099-8325 EB

SHEET S-113 OF S-333 SHEETS

F.A.I RTE.	SECTION	COUNTY	TOTAL SHEETS	SHEET NO.
I-80	FAI 80 21 STRUCTURE 2	WILL	1230	694
		CONTRACT NO. 62R23		
		ILLINOIS	FED. AID PROJECT	

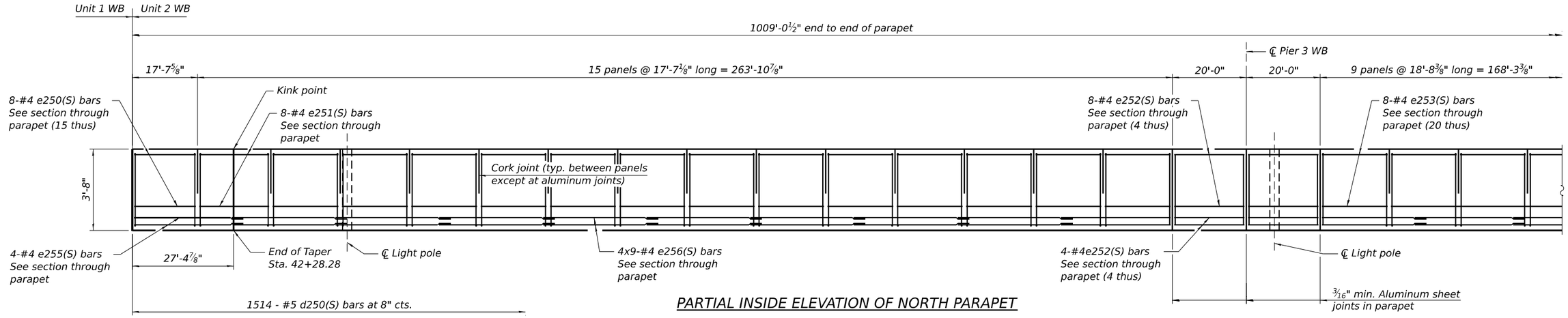

PARTIAL INSIDE ELEVATION OF NORTH PARAPET

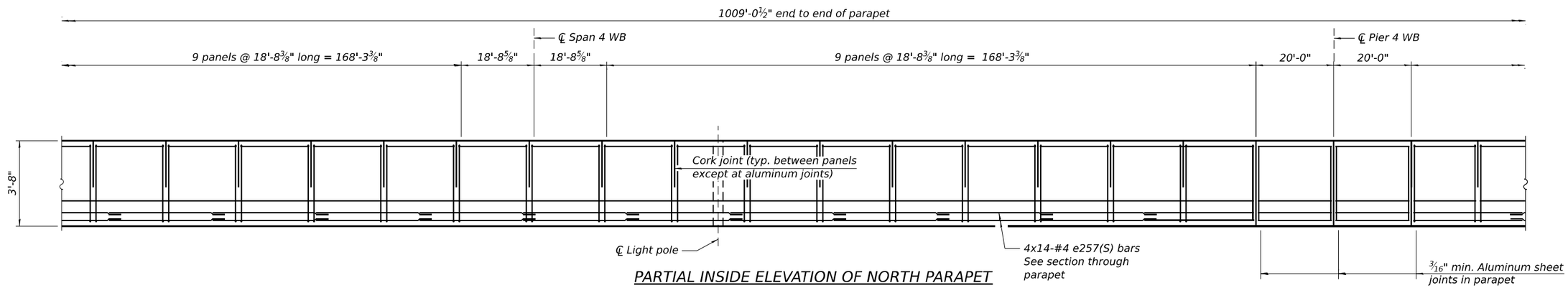

PARTIAL INSIDE ELEVATION OF NORTH PARAPET

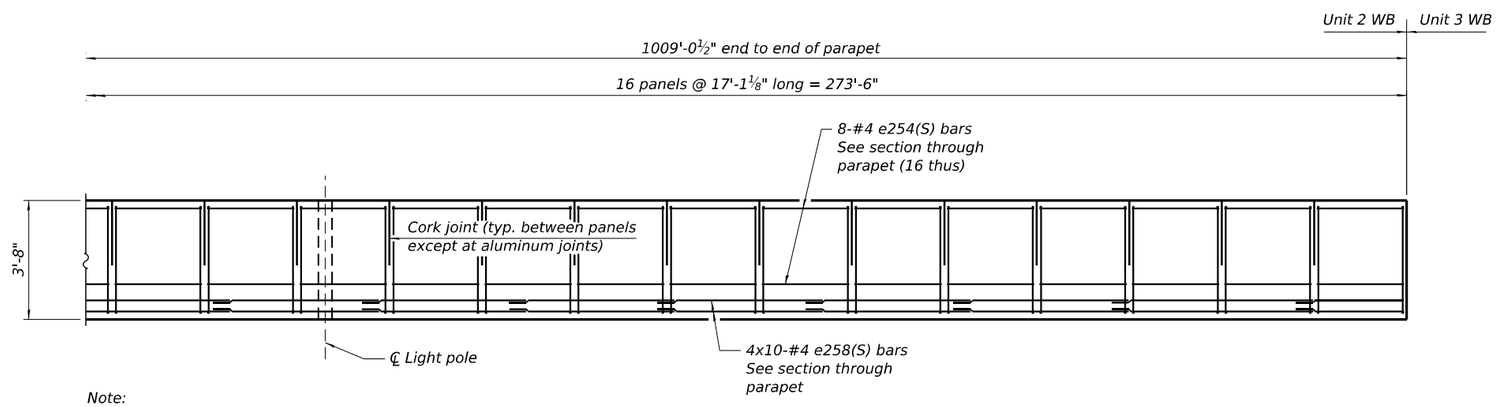

Note:
For details of attachment of navigation lights
see details on sheet S-221

PARTIAL INSIDE ELEVATION OF NORTH PARAPET

MINIMUM BAR LAP

#4 bar = 2'-5"

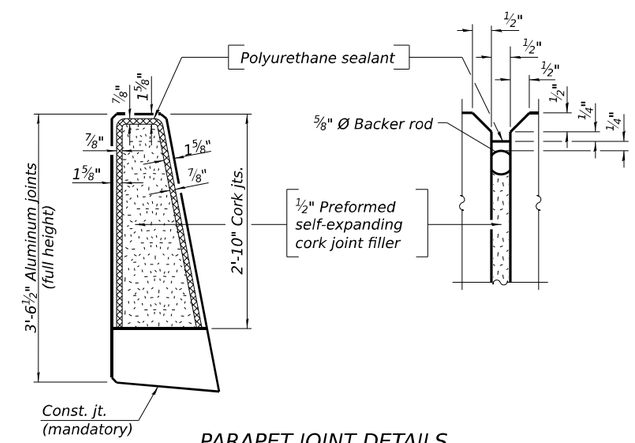

PARAPET JOINT DETAILS

Notes:
The 3/16" minimum aluminum sheet shall be ASTM B 209 alloy 3003-H14 and coated with 5 mils of either bitumen paint or epoxy paint to minimize reaction with wet concrete. Cost included with Concrete Superstructure.
The Polyurethane Sealant shall be according to Article 1050.04 of the Std. Spec. and the color shall be gray.

MODEL: Default
FILE NAME: pw://transystems-pw.bentley.com:transyscorp-pw1-hosted/Documents/Projects_2018/CH401/401180022/03-WSP/CAD/62R23-RB-1/Sheets/Structural/0998309-62R23-S3114-D0205.dgn

WSP USA Inc.
30 N. LASALLE STREET
SUITE 4200
CHICAGO, IL 60602
TEL: (312) 782-8150
FAX: (312) 782-1684

USER NAME = USSJ696614	DESIGNED - PK	REVISED -	
	CHECKED - LAS	REVISED -	
PLOT SCALE = 28.000 ' / in.	DRAWN - BK	REVISED -	
PLOT DATE = 11/5/2025	CHECKED - LAS	REVISED -	

STATE OF ILLINOIS
DEPARTMENT OF TRANSPORTATION

PARAPET ELEVATION 1 - UNIT 2 WB
STRUCTURE NUMBER 099-8309 WB AND 099-8325 EB

SHEET S-114 OF S-333 SHEETS

F.A.I RTE.	SECTION	COUNTY	TOTAL SHEETS	SHEET NO.
I-80	FAI 80 21 STRUCTURE 2	WILL	1230	695
		CONTRACT NO. 62R23		
	ILLINOIS	FED. AID PROJECT		

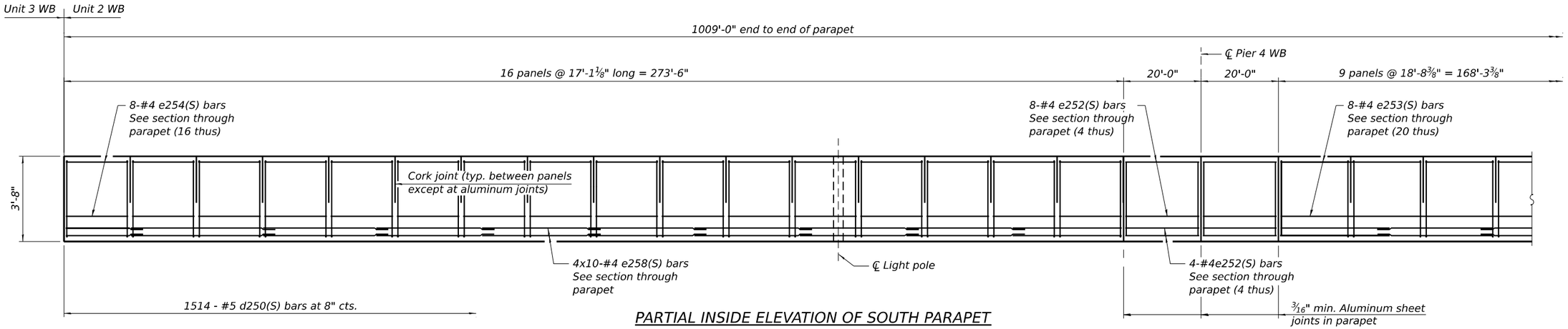

PARTIAL INSIDE ELEVATION OF SOUTH PARAPET

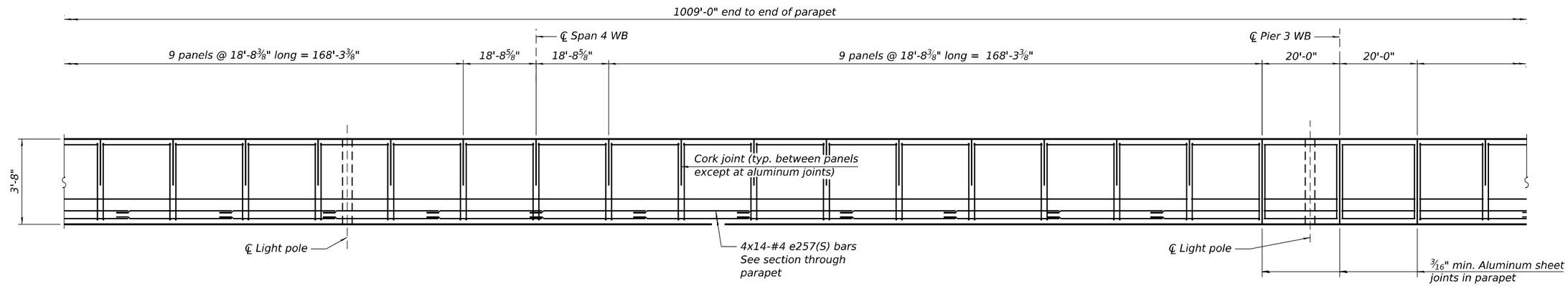

PARTIAL INSIDE ELEVATION OF SOUTH PARAPET

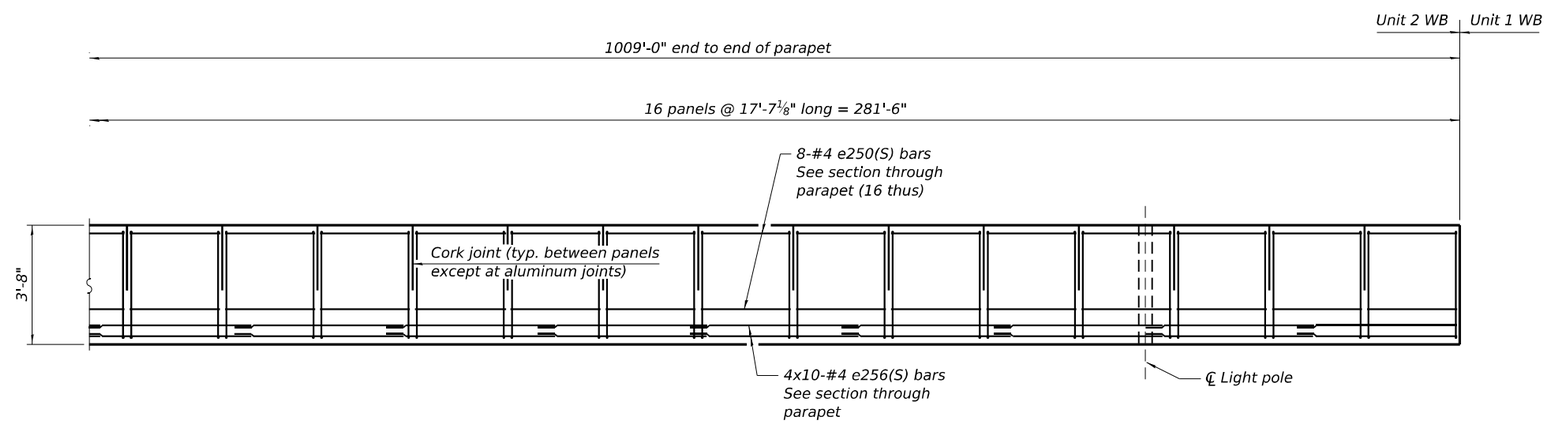

PARTIAL INSIDE ELEVATION OF SOUTH PARAPET

MINIMUM BAR LAP

#4 bar = 2'-5"

MODEL: Default
FILE NAME: pw://transystems-pw.bentley.com:transyscorp-pw1-hosted/Documents/Projects_2018/CH401/401180022/03-WSP/CAD/62R23-RB-1/Sheets/Structural/0998309-62R23-S315-DK206.dgn

WSP USA Inc.
30 N. LASALLE STREET
SUITE 4200
CHICAGO, IL 60602
TEL: (312) 782-8150
FAX: (312) 782-1684

USER NAME = USSJ696614	DESIGNED - PK	REVISED -	
	CHECKED - LAS	REVISED -	
PLOT SCALE = 28.000 ' / in.	DRAWN - BK	REVISED -	
PLOT DATE = 11/5/2025	CHECKED - LAS	REVISED -	

STATE OF ILLINOIS
DEPARTMENT OF TRANSPORTATION

PARAPET ELEVATION 2 - UNIT 2 WB
STRUCTURE NUMBER 099-8309 WB AND 099-8325 EB

SHEET S-115 OF S-333 SHEETS

F.A.I RTE.	SECTION	COUNTY	TOTAL SHEETS	SHEET NO.
I-80	FAI 80 21 STRUCTURE 2	WILL	1230	696
		CONTRACT NO. 62R23		
		ILLINOIS	FED. AID PROJECT	

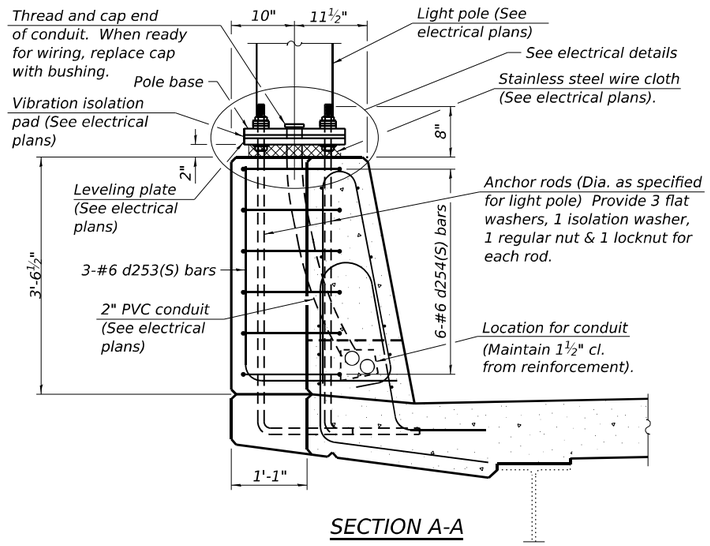

SECTION A-A

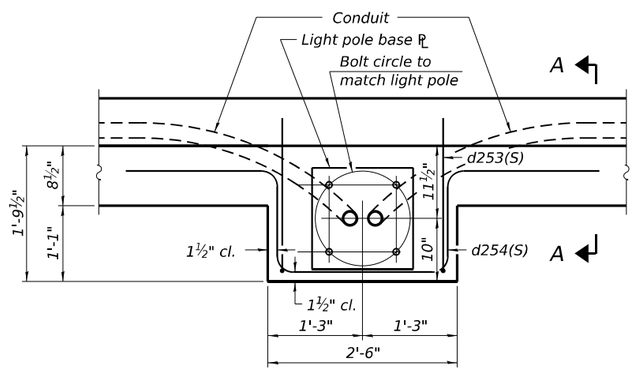

PLAN

Note:
Cost of anchor rods is included with Concrete Superstructure.

LIGHT POLE DETAILS

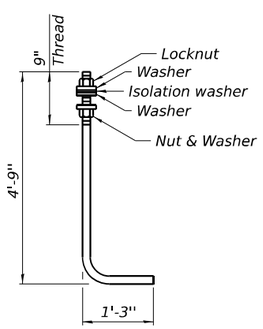

ANCHOR ROD

Diameter as specified for light poles. (ASTM F 1554 Grade 105) Full length hot dipped galvanized.

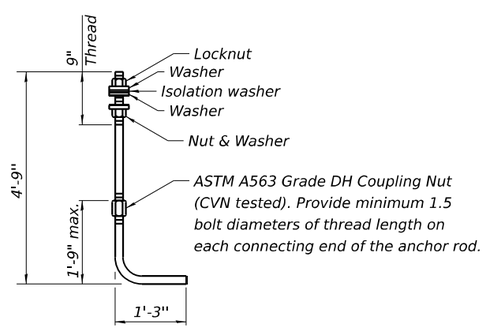

ALTERNATE ANCHOR ROD

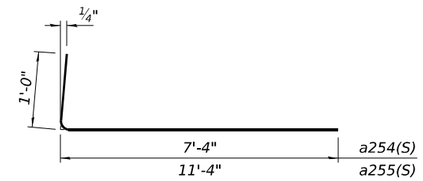

BAR a254(S), a255(S)

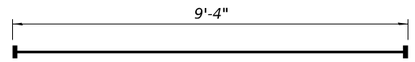

HEADED BAR a258(S)

(Headed. 28-#6 Bar terminators)

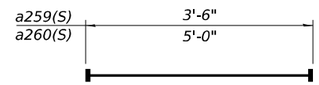

HEADED BAR a259(S), a260(S)

(Headed. 6-#6 a259(S) Bar terminators
2-#6 a260(S) Bar terminators)

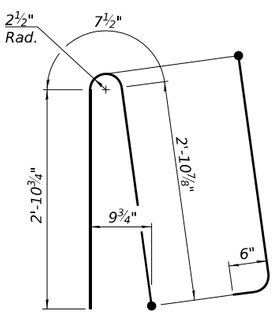

BAR d250(S)

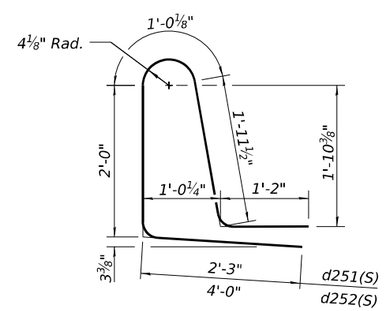

BAR d251(S), d252(S)

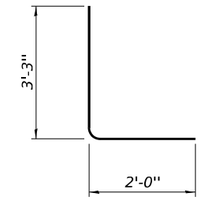

BAR d253(S)

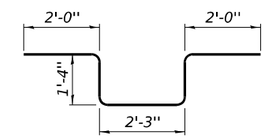

BAR d254(S)

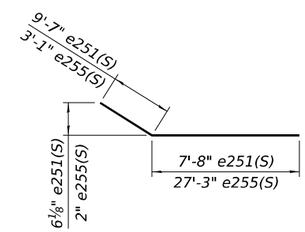

BAR e251(S), e255(S)

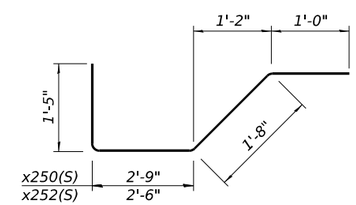

BAR x250(S) or x252(S)

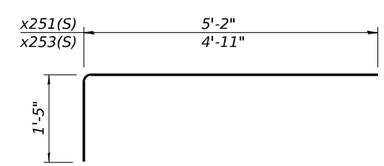

BAR x251(S), x253(S)

UNIT 2 WB SUPERSTRUCTURE BILL OF MATERIAL

Bar	No.	Size	Length	Shape
a250(S)	122	#5	39'-9"	
a251(S)	132	#6	26'-10"	
a252(S)	4,706	#5	39'-0"	
a253(S)	4,698	#5	26'-4"	
a254(S)	4,767	#6	8'-4"	
a255(S)	61	#6	12'-4"	
a256(S)	24	#6	28'-7"	
a257(S)	24	#6	28'-1"	
a258(S)	14	#6	9'-4"	
a259(S)	3	#6	3'-6"	
a260(S)	1	#6	5'-0"	
a261(S)	152	#5	1'-6"	
b250(S)	2,767	#5	32'-3"	
b251(S)	1,296	#6	33'-9"	
b252(S)	2,586	#5	33'-1"	
d250(S)	3,028	#5	7'-0"	
d251(S)	2,987	#5	8'-5"	
d252(S)	41	#5	10'-2"	
d253(S)	24	#6	5'-3"	
d254(S)	48	#6	8'-11"	
e250(S)	248	#4	17'-3"	
e251(S)	8	#4	17'-3"	
e252(S)	96	#4	19'-8"	
e253(S)	320	#4	18'-4"	
e254(S)	256	#4	16'-9"	
e255(S)	4	#4	30'-4"	
e256(S)	76	#4	30'-4"	
e257(S)	112	#4	29'-0"	
e258(S)	80	#4	29'-6"	
x250(S)	69	#5	6'-10"	
x251(S)	78	#5	6'-7"	
x252(S)	69	#5	6'-7"	
x253(S)	78	#5	6'-4"	
Concrete Superstructure			Cu Yd.	2,364.1
Reinforcement Bars, Stainless Steel			Pound	708,490
Protective Coat			Sq. Yd.	9,070
Bridge Deck Grooving (Longitudinal)			Sq. Yd.	5,446
Diamond Grinding (Bridge Section)			Sq. Yd.	7,633

Note: Bar terminators paid for separately. See Total Bill of Materials.

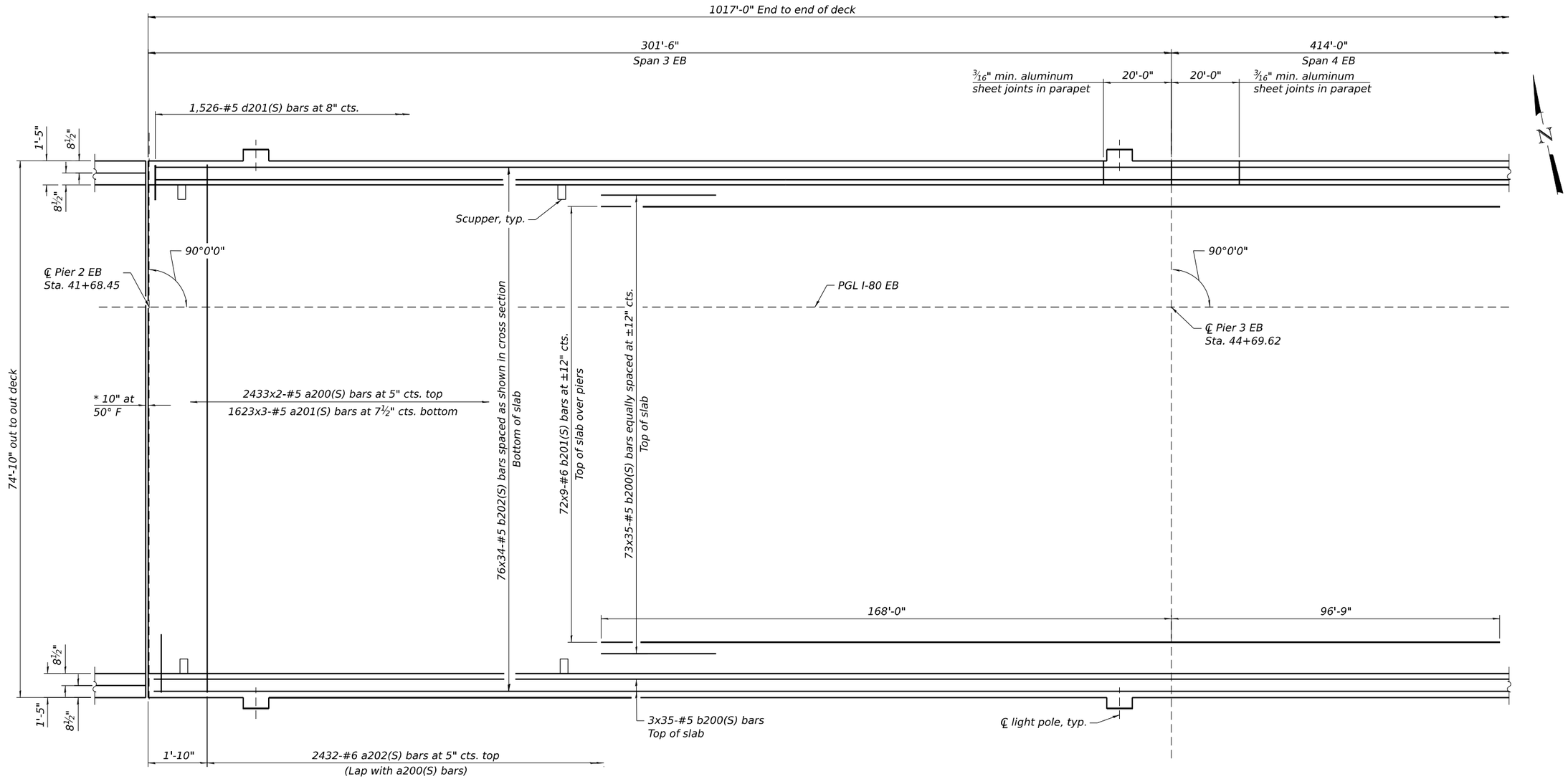

PLAN - UNIT 2 EB

* Dimension showing concrete opening. For joint opening and bars near joint see sheet S-156

MINIMUM BAR LAP

#5 bar = 3'-6"
#6 bar = 4'-10"

NOTES:

1. See sheet S-123 for superstructure details and Bill of Material.
2. Offsets for scupper and light pole locations are measured off of EB PGL.
3. Bars indicated thus, 32 x 2 - #5 etc. indicates 32 lines of bars with 2 lengths per line.
4. For Cross Section see sheet S-120.

MODEL: Default
FILE NAME: pw://transystems-pw.bentley.com:transyscorp-pw1-hosted/Documents/Projects_2018/CH401/401180022/03-WSP/CAD/62R23-RB-1/Sheets/Structural/0998309-62R23-S317-DK208.dgn

WSP USA Inc.
30 N. LASALLE STREET
SUITE 4200
CHICAGO, IL 60602
TEL: (312) 782-8150
FAX: (312) 782-1684

USER NAME = USSJ696614	DESIGNED - PK	REVISED -	
	CHECKED - LAS	REVISED -	
PLOT SCALE = 32.000 ' / in.	DRAWN - BK	REVISED -	
PLOT DATE = 11/5/2025	CHECKED - LAS	REVISED -	

STATE OF ILLINOIS
DEPARTMENT OF TRANSPORTATION

DECK PLAN 1 - UNIT 2 EB
STRUCTURE NUMBER 099-8309 WB AND 099-8325 EB

SHEET S-117 OF S-333 SHEETS

F.A.I RTE.	SECTION	COUNTY	TOTAL SHEETS	SHEET NO.
I-80	FAI 80 21 STRUCTURE 2	WILL	1230	698
		CONTRACT NO. 62R23		
	ILLINOIS	FED. AID PROJECT		

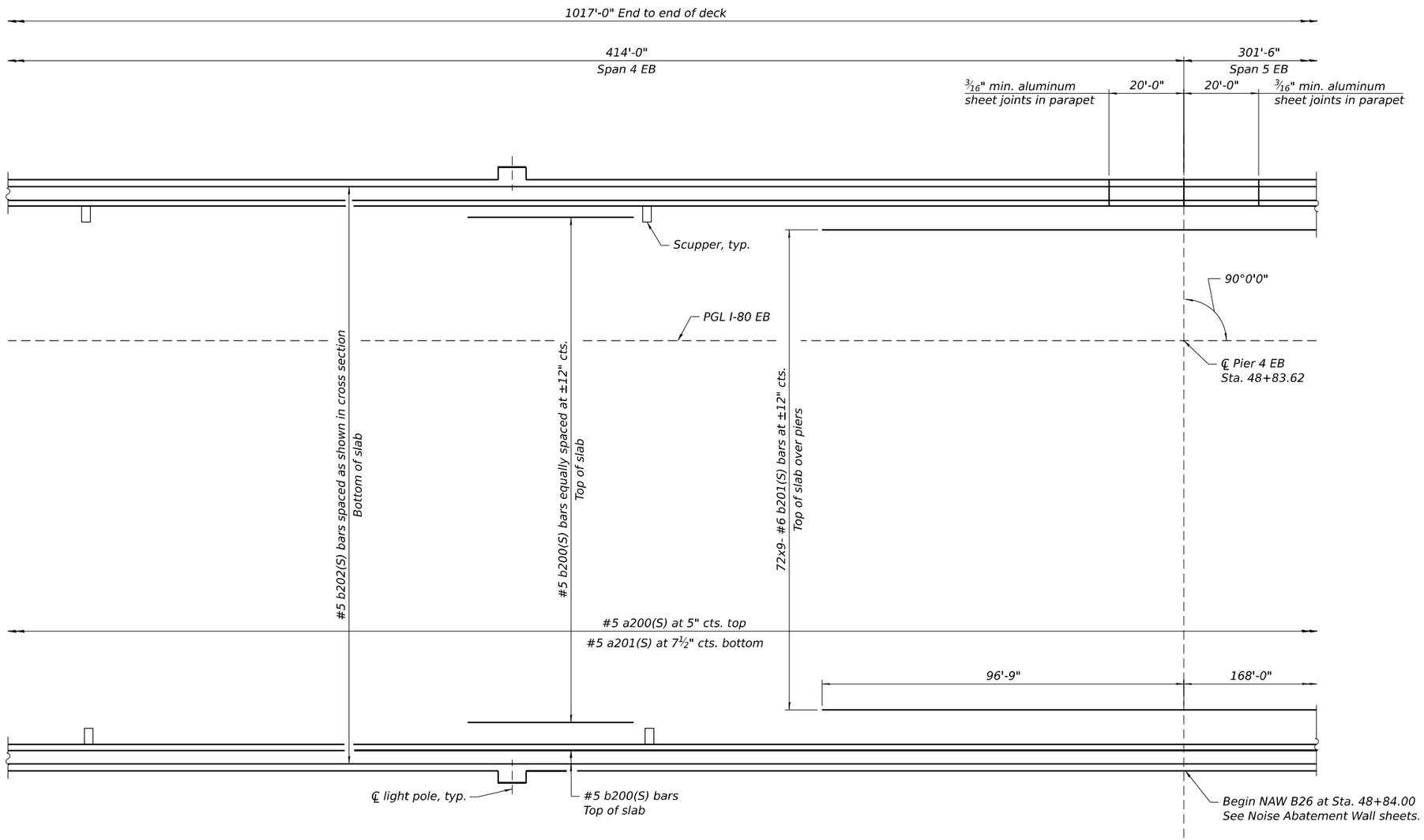

PLAN - UNIT 2 EB

MINIMUM BAR LAP

#5 bar = 3'-6"
#6 bar = 4'-10"

NOTES:

1. See sheet S-123 for superstructure details and Bill of Material.
2. Bars indicated thus, 32 x 2 - #5 etc. indicates 32 lines of bars with 2 lengths per line.
3. For Cross Section see sheet S-120.

MODEL: Default
FILE NAME: pw://transystems-pw.bentley.com:transyscorp-pw1-hosted/Documents/Projects_2018/CH401/401186022/03-WSP/CAD/62R23-RB-1/Sheets/Structural/0998309-62R23-S318-DK209.dgn

WSP USA Inc.
30 N. LASALLE STREET
SUITE 4200
CHICAGO, IL 60602
TEL: (312) 782-8150
FAX: (312) 782-1684

USER NAME = USSJ696614	DESIGNED - PK	REVISED -	
	CHECKED - LAS	REVISED -	
PLOT SCALE = 32.000 ' / in.	DRAWN - BK	REVISED -	
PLOT DATE = 11/5/2025	CHECKED - LAS	REVISED -	

STATE OF ILLINOIS
DEPARTMENT OF TRANSPORTATION

DECK PLAN 2 - UNIT 2 EB
STRUCTURE NUMBER 099-8309 WB AND 099-8325 EB

SHEET S-118 OF S-333 SHEETS

F.A.I RTE.	SECTION	COUNTY	TOTAL SHEETS	SHEET NO.
I-80	FAI 80 21 STRUCTURE 2	WILL	1230	699
		CONTRACT NO. 62R23		
	ILLINOIS	FED. AID PROJECT		

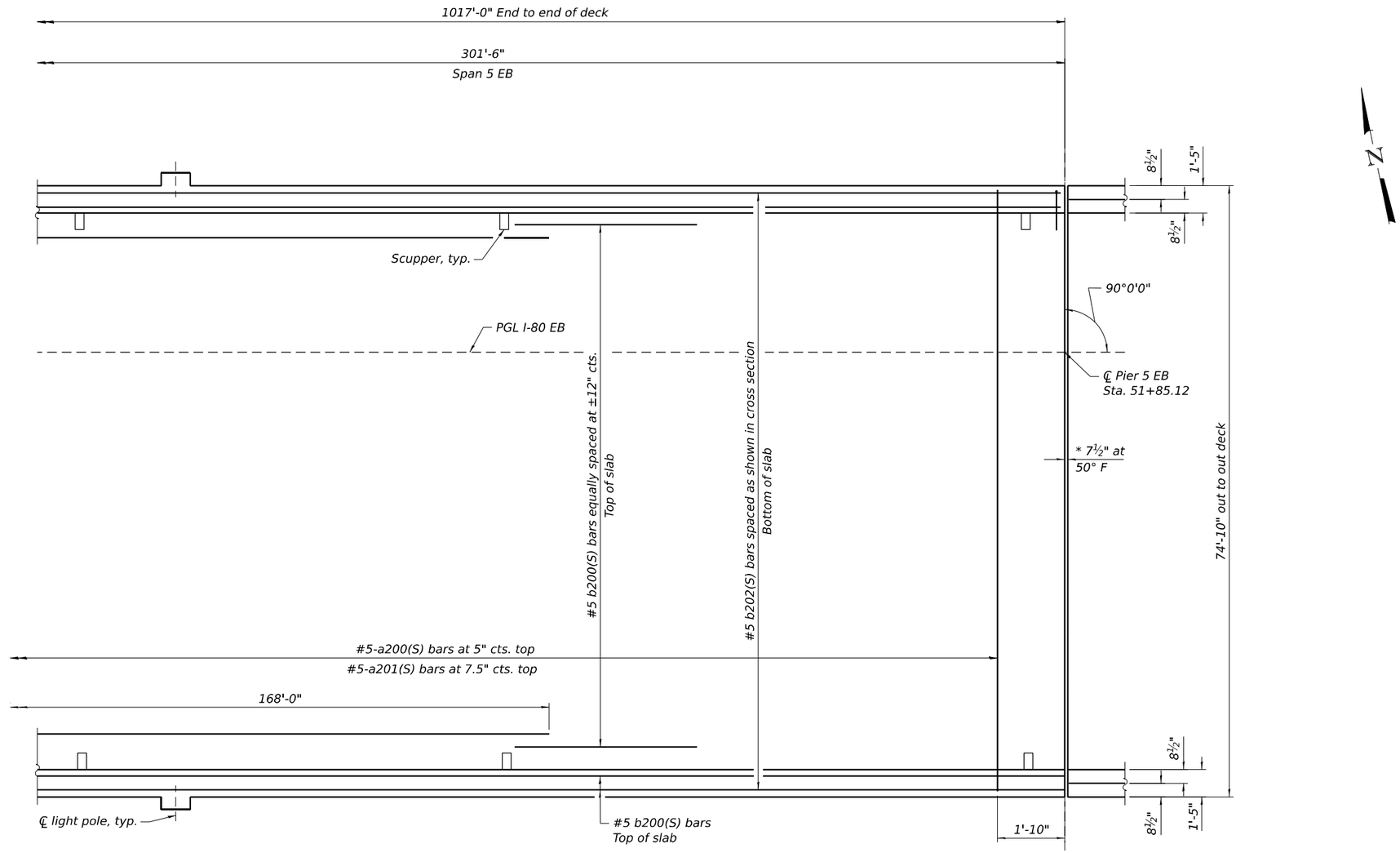

PLAN - UNIT 2 EB

* Dimension showing concrete opening. For joint opening and bars near joint see sheet S-158

MINIMUM BAR LAP

#5 bar = 3'-6"
#6 bar = 4'-10"

NOTES:

1. See sheet S-123 for superstructure details and Bill of Material.
2. Bars indicated thus, 32 x 2 - #5 etc. indicates 32 lines of bars with 2 lengths per line.
3. For Cross Section see sheet S-120.

MODEL: Default
FILE NAME: pw://transystems-pw.bentley.com:transyscorp-pw1-hosted/Documents/Projects_2018/CH401/401186022/03-WSP/CAD/62R23-RB-1/Sheets/Structural/0998309-62R23-S319-DK210.dgn

WSP USA Inc.
30 N. LASALLE STREET
SUITE 4200
CHICAGO, IL 60602
TEL: (312) 782-8150
FAX: (312) 782-1684

USER NAME = USSJ696614	DESIGNED - PK	REVISED -	
	CHECKED - LAS	REVISED -	
PLOT SCALE = 32.000 ' / in.	DRAWN - BK	REVISED -	
PLOT DATE = 11/5/2025	CHECKED - LAS	REVISED -	

STATE OF ILLINOIS
DEPARTMENT OF TRANSPORTATION

DECK PLAN 3 - UNIT 2 EB
STRUCTURE NUMBER 099-8309 WB AND 099-8325 EB

SHEET S-119 OF S-333 SHEETS

F.A.I RTE.	SECTION	COUNTY	TOTAL SHEETS	SHEET NO.
I-80	FAI 80 21 STRUCTURE 2	WILL	1230	700
		CONTRACT NO. 62R23		
	ILLINOIS	FED. AID PROJECT		