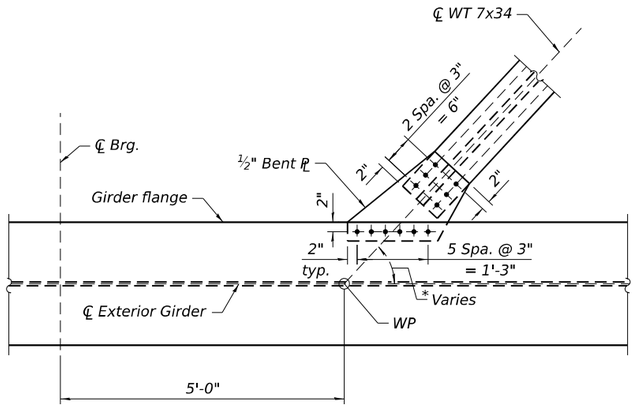

DETAIL 1
TOP LATERAL BRACING CONNECTION
NEAR END PIER

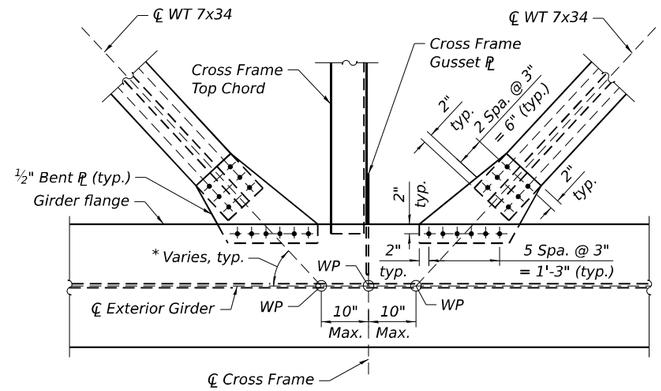

DETAIL 2
TOP LATERAL BRACING CONNECTION
AT EXTERIOR GIRDER
(TYPICAL)

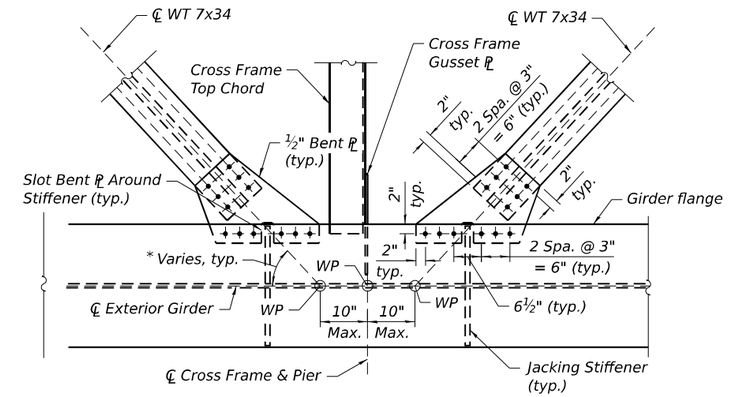

DETAIL 2A
TOP LATERAL BRACING CONNECTION
AT EXTERIOR GIRDER
(AT PIERS 3 & 4)

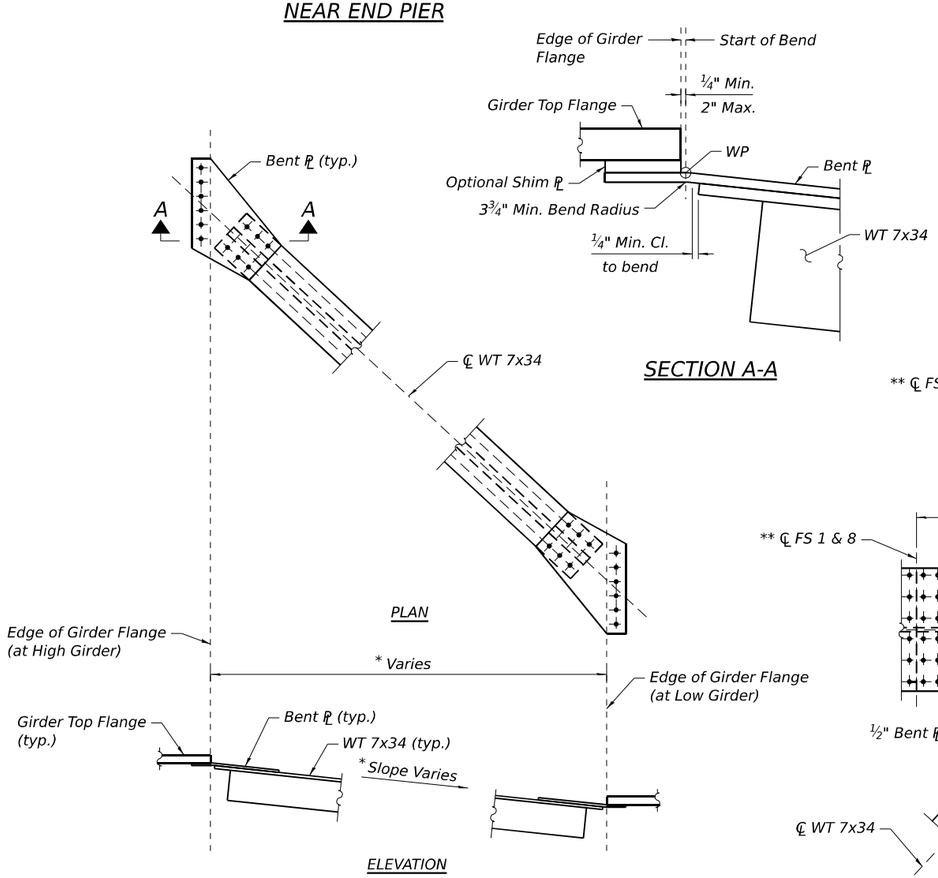

TOP LATERAL GUSSET PLATE BEND DETAIL

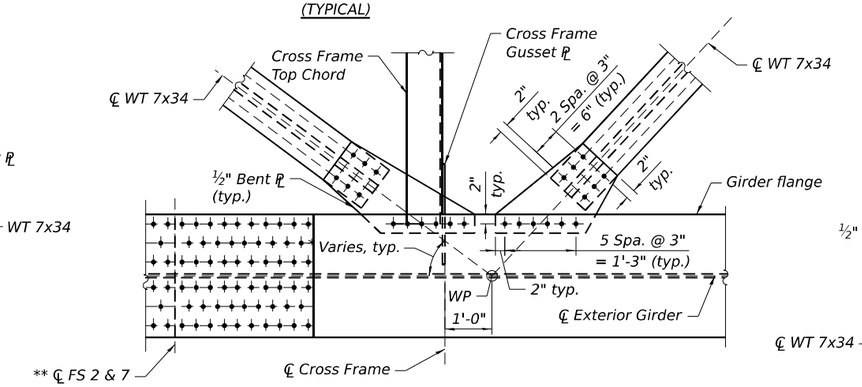

DETAIL 2B
TOP LATERAL BRACING CONNECTION
AT EXTERIOR GIRDER
(NEAR FS 2 & 7)

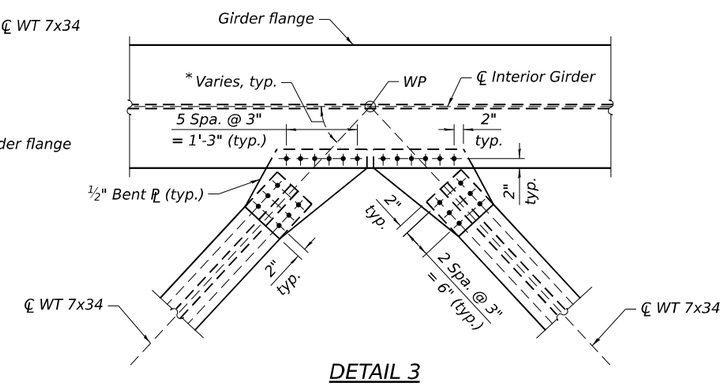

DETAIL 3
TOP LATERAL BRACING CONNECTION
AT INTERIOR GIRDER

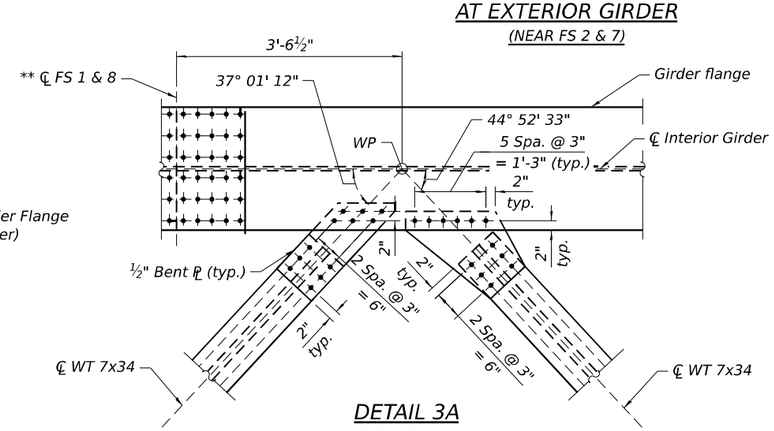

DETAIL 3A
TOP LATERAL BRACING CONNECTION
AT INTERIOR GIRDER
(NEAR FS 1 & 8)

NOTES:

1. All bolted top lateral bracing connections shall be ⅞" ∅ bolts in 1$\frac{1}{16}$" ∅ holes. Fasteners shall be ASTM F 3125 Grade A325 Type 3 weathering steel bolts, except at girder ends which shall be ASTM F 3125 Grade A325 Type 1, mechanically galvanized bolts.
2. Class B contact surface for slip resistance, shall be provided for all lateral bracing connections.
3. Two hardened washers required for each oversized hole.
4. To compensate for cross slope and difference in adjacent girder elevations, bend top lateral gusset plate as shown in detail. W.P. locations may be adjusted as req'd near field splices.
5. All structural steel shall be AASHTO M270 Grade 50W.

* To be detailed in shop drawings.

**See Sheet S-216 for Field Splice Details

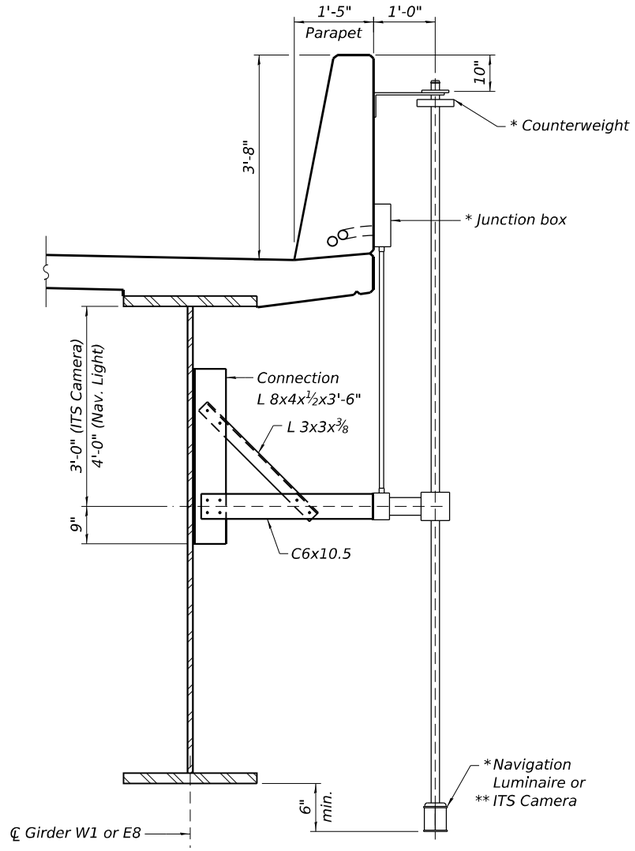

NAVIGATION LIGHT SUPPORT DETAIL

(No. support required = 9, see Framing Plan for locations)

* See Electrical Plans for navigation lights
** See ITS Plans for ITS camera details

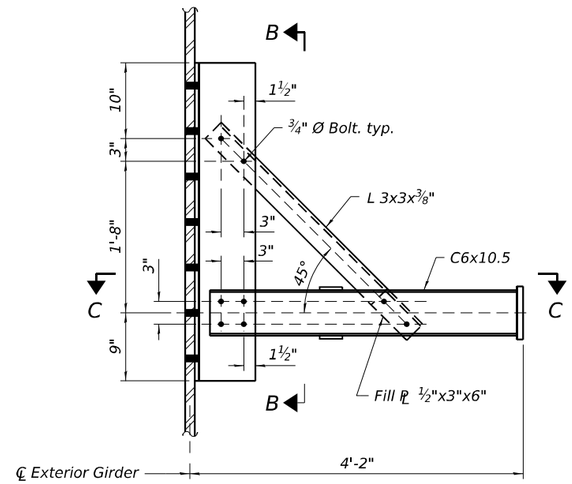

MOUNTING BRACKET DETAIL

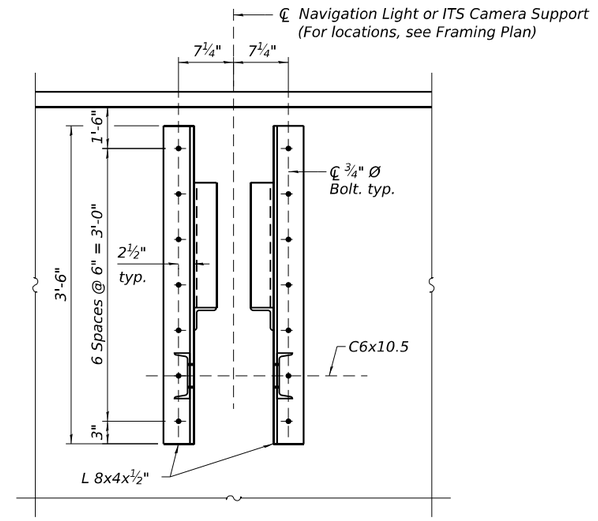

VIEW B-B

(Showing connection angle)

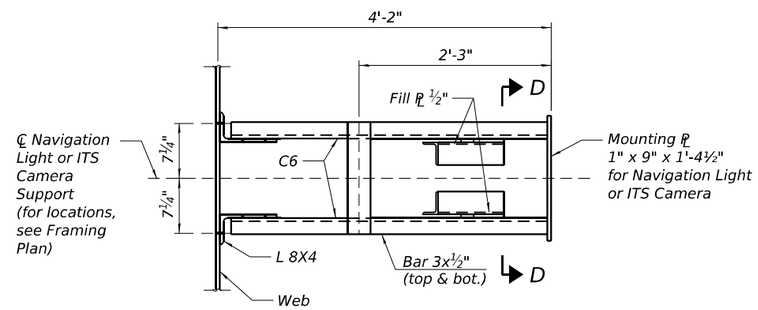

VIEW C-C

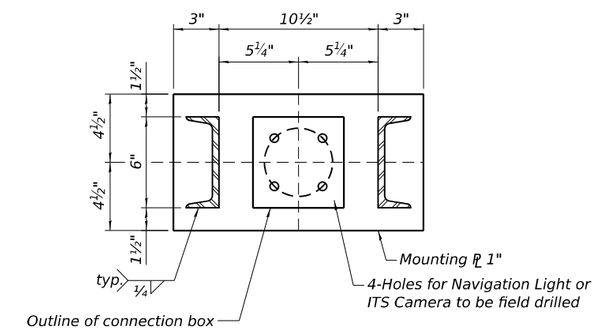

SECTION D-D

NOTES:

1. Mounting brackets for the Navigation Lights were included in Contract 62W52. The Contractor shall erect the brackets with the erection of the structural steel. The mounting brackets for the ITS Cameras are to be included in the cost of the item "Camera Mounting Assembly".
2. All plates and shapes for mounting bracket shall be AASHTO M270 Grade 50W.
3. All bolted Navigation Light or ITS Camera support connections shall be ¾" ∅ bolts in 15/16" ∅ holes.
4. Cost of all connection plates attached to the parapet to be included in the Navigation Light pay item, see Electrical Plans or in the ITS Camera pay item, see ITS Plans.

WSP USA Inc.
30 N. LASALLE STREET
SUITE 4200
CHICAGO, IL 60602
TEL: (312) 782-8150
FAX: (312) 782-1684

USER NAME = USSJ696614	DESIGNED - KB	REVISED -	
	CHECKED - LAS	REVISED -	
PLOT SCALE = 0:2 ':' / in.	DRAWN - GM	REVISED -	
PLOT DATE = 11/5/2025	CHECKED - PJL	REVISED -	

STATE OF ILLINOIS
DEPARTMENT OF TRANSPORTATION

NAVIGATION LIGHT SUPPORT DETAILS - UNIT 2 WB & EB
STRUCTURE NUMBER 099-8309 WB AND 099-8325 EB

SHEET S-221 OF S-333 SHEETS

F.A.I RTE.	SECTION	COUNTY	TOTAL SHEETS	SHEET NO.
I-80	FAI 80 21 STRUCTURE 2	WILL	1230	802
		CONTRACT NO. 62R23		
	ILLINOIS	FED. AID PROJECT		

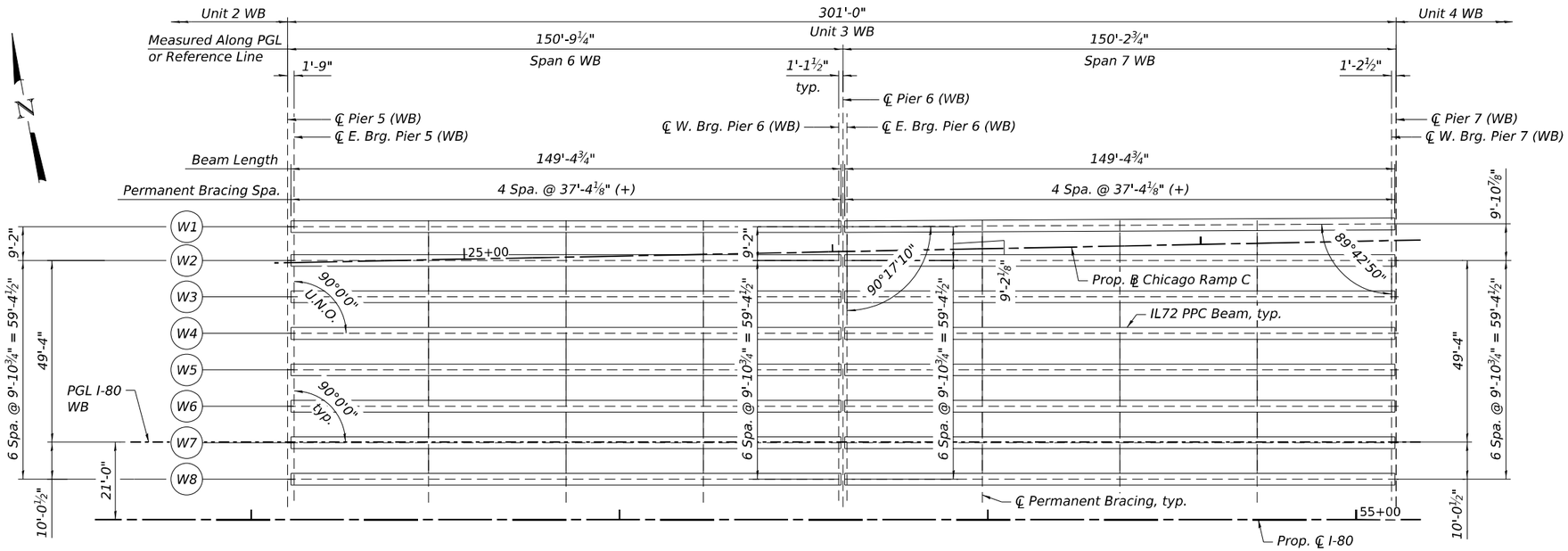

FRAMING PLAN - UNIT 3 WB

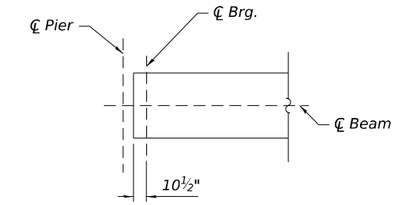

BEAM END EXTENSIONS - PIERS 5 & 7

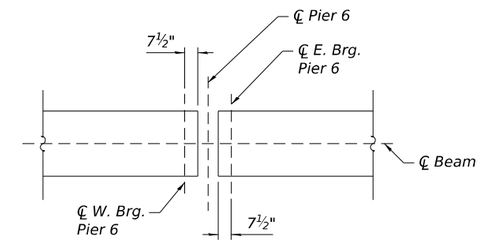

BEAM END EXTENSIONS - PIER 6

NOTES:

1. All beam spacing is measured along ℄ bearing.
2. See sheet S-223 for beam details.
3. See sheet S-237 for permanent bracing details.
4. See sheets S-157, S-159, and S-161 for continuity diaphragm details.
5. Moments and reactions shown on this sheet correspond to beams W1 and W3.

UNIT 3 WB EXTERIOR BEAM MOMENT TABLE		0.5 Sp. 6	Pier 6	0.5 Sp. 7
I	(in^4)	738,236	-	738,236
I'	(in^4)	1,389,622	1,389,622	1,400,371
S_b	(in^3)	22,856	-	22,856
S_b'	(in^3)	29,988	29,988	30,070
S_t	(in^3)	18,595	-	18,595
S_t'	(in^3)	54,153	54,153	55,068
DC1	(k/')	2.203	-	2.203
M_{DC1}	('k)	6,023	-	6,023
DC2	(k/')	0.362	0.367	0.371
M_{DC2}	('k)	508	-999	528
DW	(k/')	0.304	0.309	0.313
M_{DW}	('k)	445	-853	440
LLDF		0.690	0.690	0.710
M_{LL+IM}	('k)	2,717	-2,815	2,792

UNIT 3 WB INTERIOR BEAM MOMENT TABLE		0.5 Sp. 6	Pier 6	0.5 Sp. 7
I	(in^4)	738,236	-	738,236
I'	(in^4)	1,507,990	1,507,990	1,507,990
S_b	(in^3)	22,856	-	22,856
S_b'	(in^3)	30,851	30,851	30,851
S_t	(in^3)	18,595	-	18,595
S_t'	(in^3)	65,224	65,224	65,224
DC1	(k/')	2.234	-	2.234
M_{DC1}	('k)	6,109	-	6,109
DC2	(k/')	0.362	0.367	0.371
M_{DC2}	('k)	508	-999	528
DW	(k/')	0.495	0.495	0.495
M_{DW}	('k)	672	-1,349	690
LLDF		0.770	0.770	0.770
M_{LL+IM}	('k)	3,030	-3,141	3,030

UNIT 3 WB EXTERIOR BEAM REACTION TABLE		Pier 5	Pier 6 Span 6	Pier 6 Span 7	Pier 7
	LLDF	0.670	0.670	0.670	0.710
	OCF	-	-	-	-
	R_{DC1} (k)	165.6	171.3	171.3	165.9
*	R_{DC2} (k)	20.4	34.5	34.5	21.0
*	R_{DW} (k)	17.7	29.5	29.5	17.6
*	R_{LL} (k)	72.8	75.5	75.5	77.0
*	R_{IM} (k)	14.7	12.9	12.9	15.6
**	R_{Total} (Strength I)(Impact) (k)	432.7	479.0	479.0	443.2
**	R_{Total} (Strength I)(No Impact) (k)	405.7	455.2	455.2	414.6

UNIT 3 WB INTERIOR BEAM REACTION TABLE		Pier 5	Pier 6 Span 6	Pier 6 Span 7	Pier 7
	LLDF	0.920	0.920	0.920	0.950
	OCF	-	-	-	-
	R_{DC1} (k)	172.2	182.8	182.8	172.2
*	R_{DC2} (k)	20.4	34.5	34.5	21.0
*	R_{DW} (k)	28.0	46.6	46.6	27.9
*	R_{LL} (k)	99.9	103.7	103.7	103.1
*	R_{IM} (k)	20.2	17.8	17.8	20.8
**	R_{Total} (Strength I)(Impact) (k)	517.5	581.7	581.7	525.2
**	R_{Total} (Strength I)(No Impact) (k)	480.5	549.0	549.0	486.9

*At continuous piers, reactions from composite loads are assumed to be equally distributed to each bearing line

**Limit states for reaction shown include a load modifier factor of 1.05 relating to operational clarification for an essential bridge

I: Non-composite moment of inertia of beam section ($in.^4$).
I': Composite moment of inertia of beam section ($in.^4$).
S_b: Non-composite section modulus for the bottom fiber of the prestressed beam ($in.^3$).
S_b': Composite section modulus for the bottom fiber of the prestressed beam ($in.^3$).
S_t: Non-composite section modulus for the top fiber of the prestressed beam ($in.^3$).
S_t': Composite section modulus for the top fiber of the prestressed beam ($in.^3$).
DC1: Un-factored non-composite dead load (kips/ft.).
M_{DC1}: Un-factored moment due to non-composite dead load (kip-ft.).
DC2: Un-factored long-term composite (superimposed excluding future wearing surface) dead load (kips/ft.).
M_{DC2}: Un-factored moment due to long-term composite (superimposed excluding future wearing surface) dead load (kip-ft.).
DW: Un-factored long-term composite (superimposed future wearing surface only) dead load (kips/ft.).
M_{DW}: Un-factored moment due to long-term composite (superimposed future wearing surface only) dead load (kip-ft.).
LLDF: Live Load Distribution Factor for moment and shear computed according to Article 4.6.2.2 and further IDOT provisions.
M_{LL+IM}: Un-factored live load moment plus dynamic load allowance (impact) (kip-ft.).
OCF: Obtuse Correction Factor computed according to Article 4.6.2.2.3c or as further simplified by IDOT provisions.
R_{DC1}: Un-factored reaction due to non-composite dead load (kip).
R_{DC2}: Un-factored reaction due to long-term composite (superimposed excluding future wearing surface) dead load (kip).
R_{DW}: Un-factored reaction due to long-term composite (superimposed future wearing surface only) dead load (kip).
R_{LL}: Un-factored live load reaction (kip).
R_{IM}: Un-factored dynamic load allowance (impact) (kip).
R_{Total} (Strength I)(Impact): Total factored reaction including dynamic load allowance (impact) (kip).
R_{Total} (Strength I)(No Impact): Total factored reaction not including dynamic load allowance (impact) (kip).

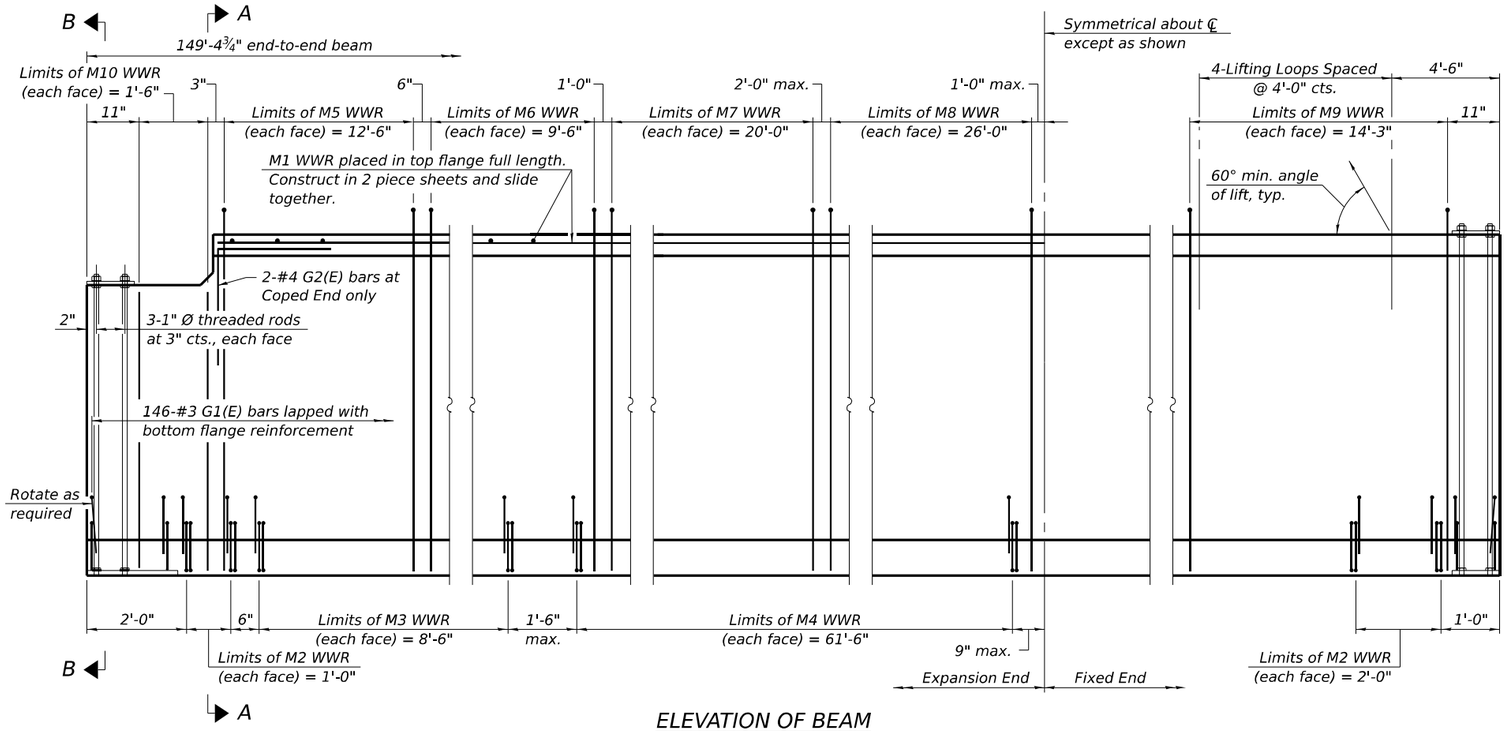

ELEVATION OF BEAM

(Showing reinforcement & dimensions)

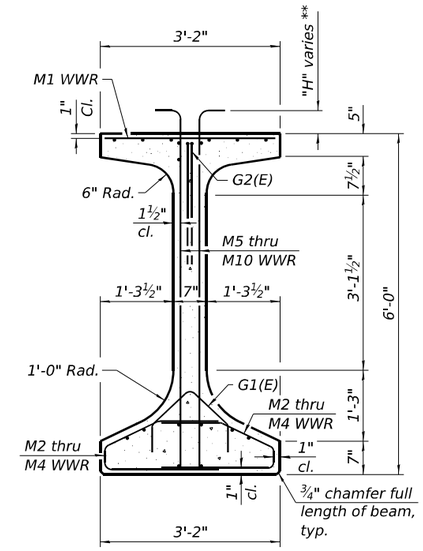

SECTION A-A

** See sheet S-236 for table of "H" dimensions.

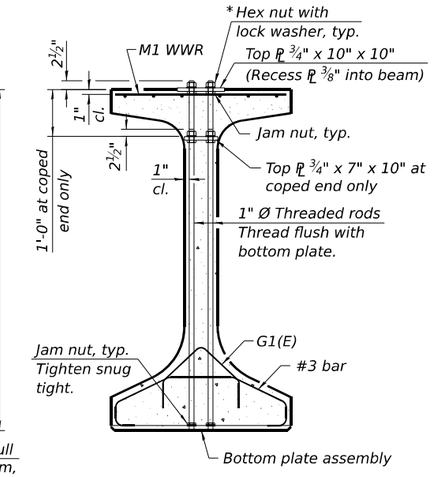

SECTION B-B

* Only tighten sufficiently to compress lock washers

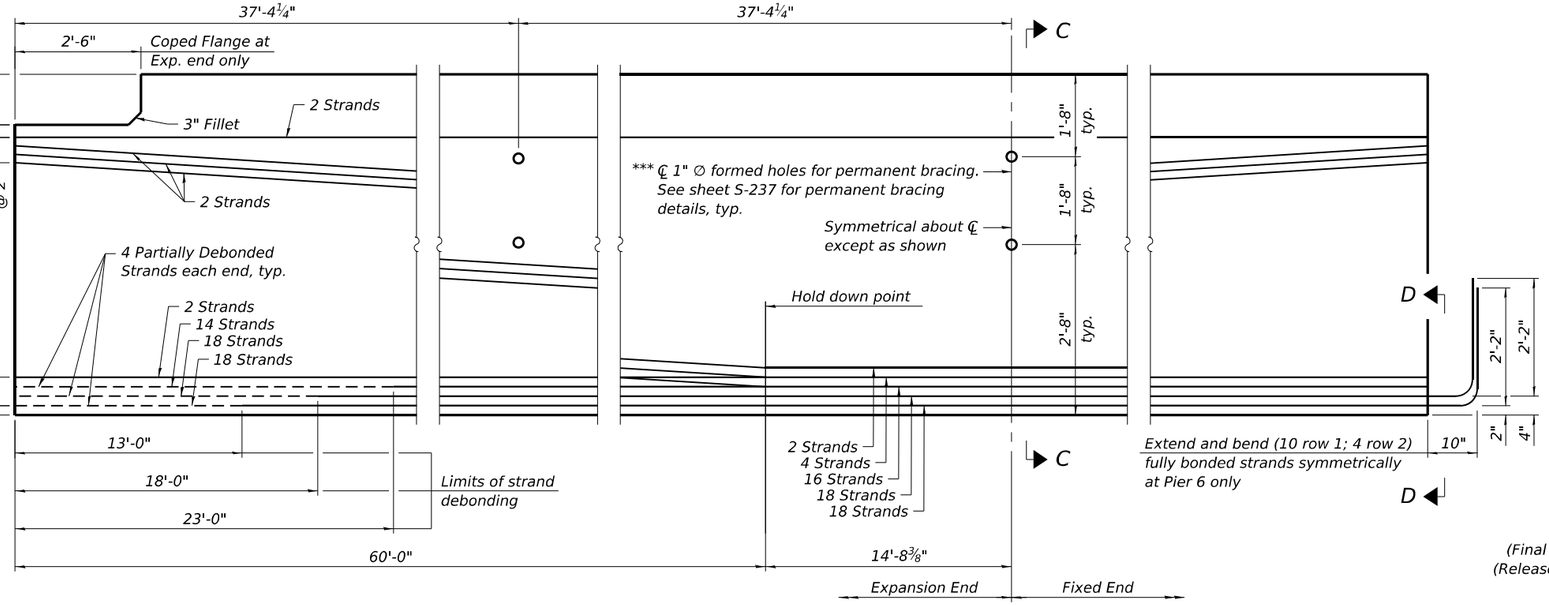

*** Fabricator shall locate to miss strands within permissible tolerances

ELEVATION OF BEAM

(Showing prestressing steel)

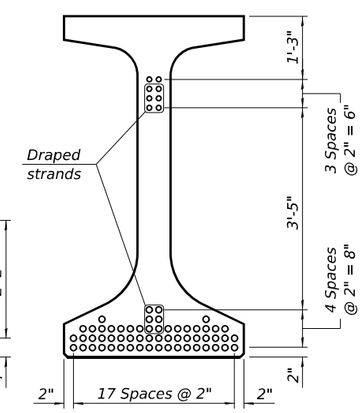

SECTION C-C

(60 - 0.6" Ø 270 ksi strands)
(Final Concrete Compr. Strength, fc = 8,500 psi)
(Release Concrete Compr. Strength, fci = 6,500 psi)

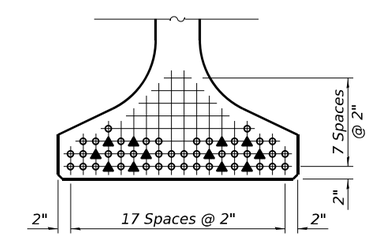

VIEW D-D

○ Fully bonded strand

▲ Partially debonded strand

NOTES:

1. See sheets S-235 and S-236 for additional details and Bill of Material.

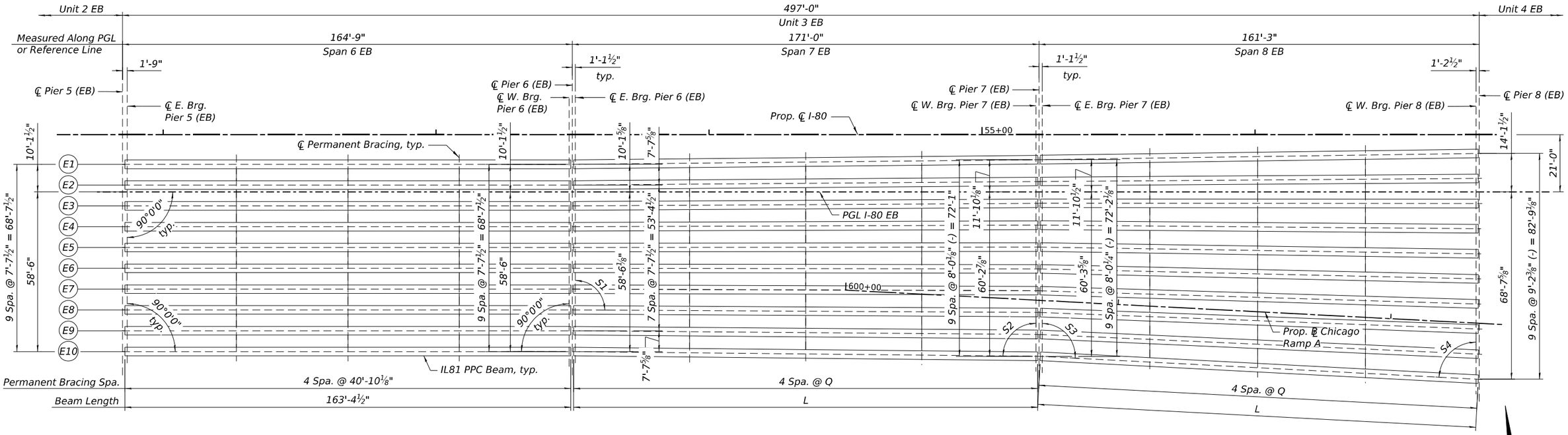

FRAMING PLAN - UNIT 3 EB

NOTES:

1. All beam spacing is measured along ℄ bearing.
2. See sheet S-222 for moment and reaction table variable definitions.
3. See sheets S-225 thru S-227 for beam details and dimensions "L" and "Q".
4. See sheet S-240 for permanent bracing details.
5. See sheets S-158, S-160, S-162, and S-164 for continuity diaphragm details.
6. Moments and reactions shown on this sheet correspond to beams E9 and E10.

UNIT 3 EB EXTERIOR BEAM MOMENT TABLE		0.5 Sp. 6	Pier 6	0.5 Sp. 7	Pier 7	0.5 Sp. 8
I	(in^4)	999,193	-	999,193	-	999,193
I'	(in^4)	1,751,786	1,751,786	1,759,957	1,767,736	1,790,379
S_b	(in^3)	27,223	-	27,223	-	27,223
S_b'	(in^3)	34,799	34,799	34,858	34,915	35,078
S_t	(in^3)	22,229	-	22,229	-	22,229
S_t'	(in^3)	57,136	57,136	57,685	58,207	59,759
$DC1$	($k/'$)	2.206	-	2.207	-	2.207
M_{DC1}	('k)	7,225	-	7,855	-	6,984
$DC2$	($k/'$)	0.357	0.373	0.389	0.394	0.399
M_{DC2}	('k)	690	-1,003	355	-1,058	752
DW	($k/'$)	0.266	0.269	0.271	0.281	0.290
M_{DW}	('k)	527	-724	228	-749	557
$LLDF$		0.600	0.610	0.610	0.640	0.670
M_{LL+IM}	('k)	2,730	-2,727	2,364	-2,817	2,985

UNIT 3 EB INTERIOR BEAM MOMENT TABLE		0.5 Sp. 6	Pier 6	0.5 Sp. 7	Pier 7	0.5 Sp. 8
I	(in^4)	999,193	-	999,193	-	999,193
I'	(in^4)	1,807,550	1,807,550	1,810,515	1,835,576	1,877,491
S_b	(in^3)	27,223	-	27,223	-	27,223
S_b'	(in^3)	35,194	35,194	35,217	35,388	35,667
S_t	(in^3)	22,229	-	22,229	-	22,229
S_t'	(in^3)	60,983	60,983	61,187	63,013	66,202
$DC1$	($k/'$)	2.110	-	2.112	-	2.114
M_{DC1}	('k)	6,912	-	7,519	-	6,687
$DC2$	($k/'$)	0.357	0.373	0.389	0.394	0.399
M_{DC2}	('k)	690	-1,003	355	-1,058	752
DW	($k/'$)	0.381	0.386	0.391	0.411	0.430
M_{DW}	('k)	754	-1,037	326	-1,102	828
$LLDF$		0.640	0.640	0.650	0.680	0.710
M_{LL+IM}	('k)	2,912	-2,861	2,519	-2,993	3,206

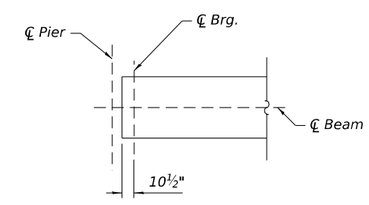

BEAM END EXTENSIONS - PIERS 5 & 8

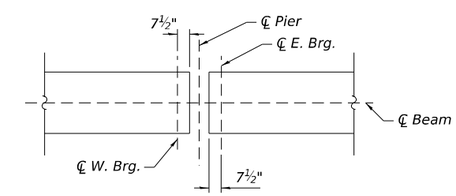

BEAM END EXTENSIONS - PIERS 6 & 7

UNIT 3 EB EXTERIOR BEAM REACTION TABLE		Pier 5	Pier 6 Span 6	Pier 6 Span 7	Pier 7 Span 7	Pier 7 Span 8	Pier 8
	$LLDF$	0.590	0.590	0.590	0.610	0.610	0.670
	OCF	-	-	-	-	-	-
	R_{DC1} (k)	180.9	186.1	193.7	194.1	183.5	178.3
*	R_{DC2} (k)	23.1	34.4	34.4	36.3	36.3	25.4
*	R_{DW} (k)	17.4	24.8	24.8	25.8	25.8	18.6
*	R_{LL} (k)	67.5	69.0	69.0	70.8	70.8	76.3
*	R_{IM} (k)	13.0	11.5	11.5	11.9	11.9	14.8
**	R_{Total} (Strength I)(Impact) (k)	443.1	476.2	486.4	494.9	481.0	463.6
**	R_{Total} (Strength I)(No Impact) (k)	419.2	455.0	455.0	473.1	459.2	436.5

UNIT 3 EB INTERIOR BEAM REACTION TABLE		Pier 5	Pier 6 Span 6	Pier 6 Span 7	Pier 7 Span 7	Pier 7 Span 8	Pier 8
	$LLDF$	0.790	0.790	0.790	0.820	0.820	0.900
	OCF	-	-	-	-	-	-
	R_{DC1} (k)	175.5	185.9	193.3	194.1	183.9	173.5
*	R_{DC2} (k)	23.1	34.4	34.4	36.3	36.3	25.4
*	R_{DW} (k)	24.9	35.5	35.5	37.8	37.8	27.6
*	R_{LL} (k)	90.4	92.3	92.3	95.2	95.2	102.2
*	R_{IM} (k)	17.4	15.4	15.4	15.4	15.4	19.8
**	R_{Total} (Strength I)(Impact) (k)	498.0	542.9	552.7	566.2	552.8	528.8
**	R_{Total} (Strength I)(No Impact) (k)	465.9	514.6	524.3	536.9	523.5	492.4

*At continuous piers, reactions from composite loads are assumed to be equally distributed to each bearing line

**Limit states for reaction shown include a load modifier factor of 1.05 relating to operational clarification for an essential bridge

BEAM SKEWS TABLE				
Beam	S1	S2	S3	S4
E1	89°25'13"	90°34'47"	89°11'12"	90°48'47"
E2	89°32'48"	90°27'12"	89°36'39"	90°23'21"
E3	89°40'37"	90°19'23"	90°2'5"	89°57'55"
E4	89°48'26"	90°11'34"	90°27'32"	89°32'28"
E5	89°56'15"	90°3'45"	90°52'58"	89°7'2"
E6	90°4'4"	89°55'56"	91°18'24"	88°41'36"
E7	90°11'53"	89°48'7"	91°43'49"	88°16'11"
E8	90°19'42"	89°40'18"	92°9'14"	87°50'47"
E9	90°27'31"	89°32'29"	92°34'37"	87°25'23"
E10	90°35'6"	89°24'54"	93°0'0"	87°0'0"

WSP USA Inc.
30 N. LASALLE STREET
SUITE 4200
CHICAGO, IL 60602
TEL: (312) 782-8150
FAX: (312) 782-1684

USER NAME = USSJ696614	DESIGNED - SJJ	REVISED -
	CHECKED - PSK	REVISED -
PLOT SCALE = 36:8.0000 ':" / in.	DRAWN - SJJ	REVISED -
PLOT DATE = 11/5/2025	CHECKED - PSK	REVISED -

STATE OF ILLINOIS
DEPARTMENT OF TRANSPORTATION

FRAMING PLAN - UNIT 3 EB
STRUCTURE NUMBER 099-8309 WB AND 099-8325 EB

SHEET S-224 OF S-333 SHEETS

F.A.I RTE.	SECTION	COUNTY	TOTAL SHEETS	SHEET NO.
I-80	FAI 80 21 STRUCTURE 2	WILL	1230	805
		CONTRACT NO. 62R23		
	ILLINOIS	FED. AID PROJECT		

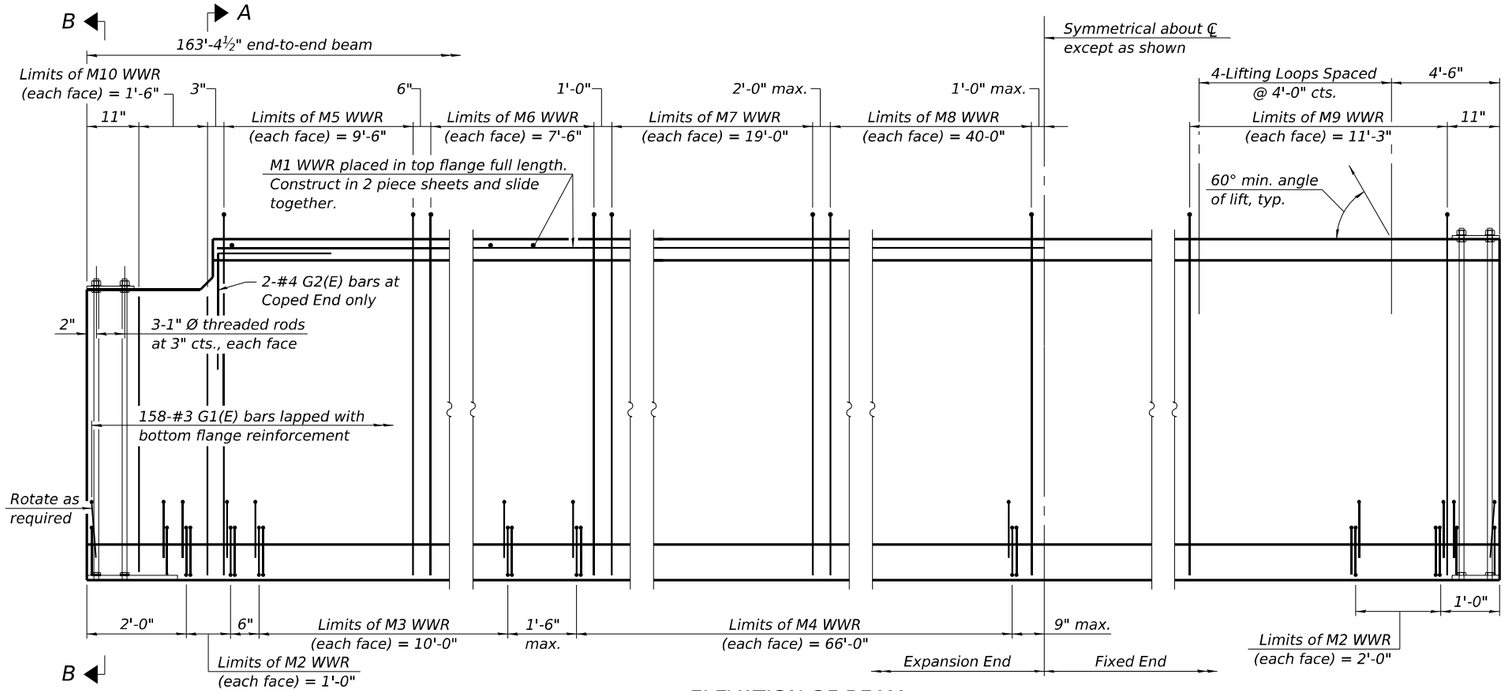

ELEVATION OF BEAM

(Showing reinforcement & dimensions)

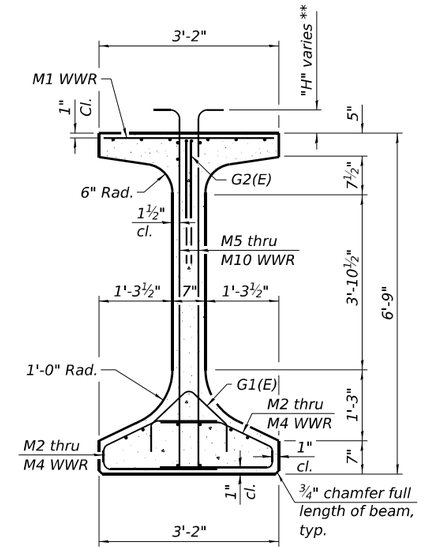

SECTION A-A

** See sheet S-239 for table of "H" dimensions.

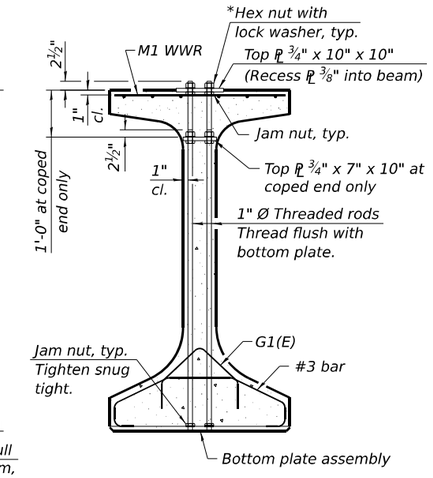

SECTION B-B

* Only tighten sufficiently to compress lock washers

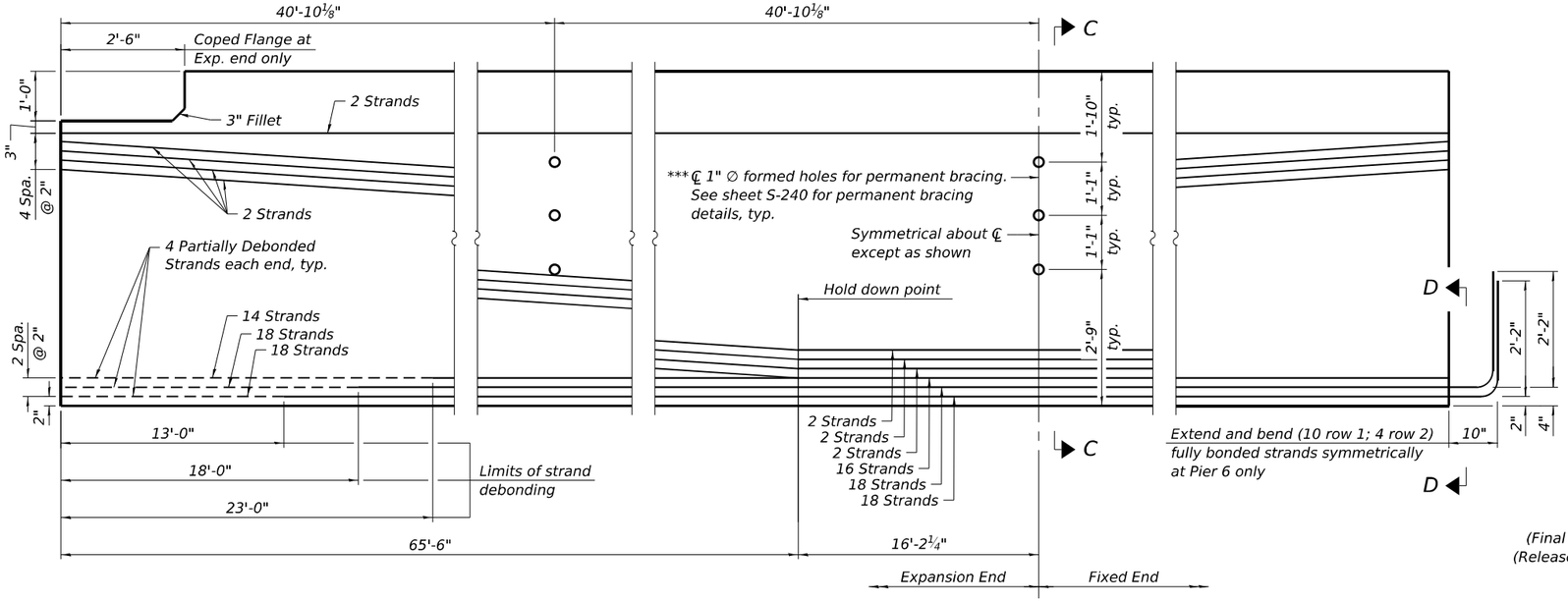

ELEVATION OF BEAM

(Showing prestressing steel)

*** Fabricator shall locate to miss strands within permissible tolerances

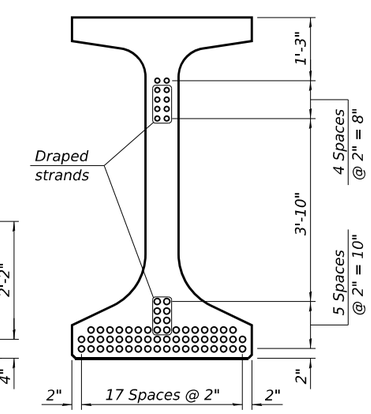

SECTION C-C

(60 - 0.6" Ø 270 ksi strands)
(Final Concrete Compr. Strength, fc = 8,500 psi)
(Release Concrete Compr. Strength, fci = 6,500 psi)

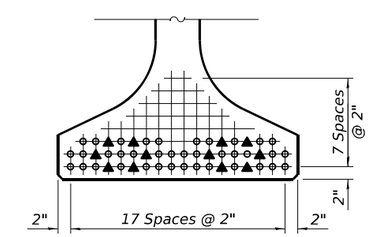

VIEW D-D

○ Fully bonded strand

▲ Partially debonded strand

NOTES:

1. See sheets S-238 and S-239 for additional details and Bill of Material.

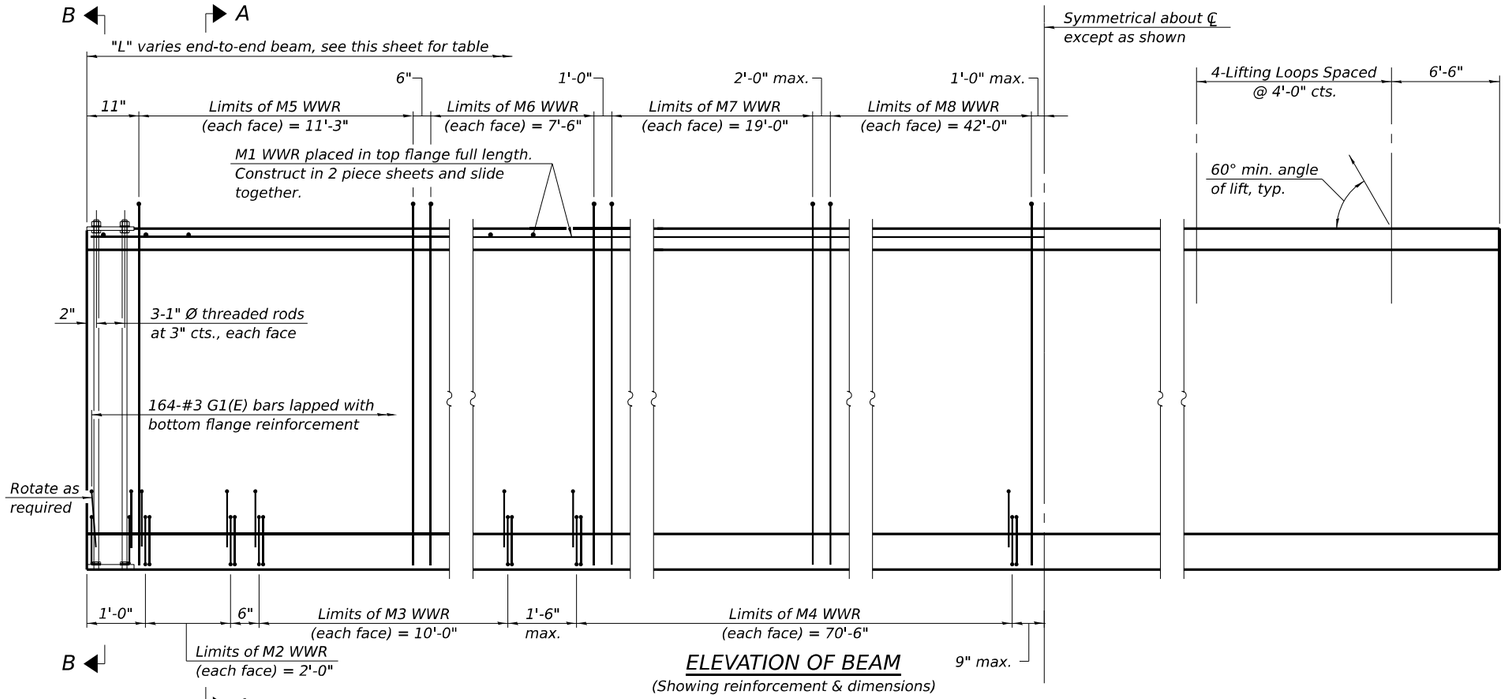

ELEVATION OF BEAM

(Showing reinforcement & dimensions)

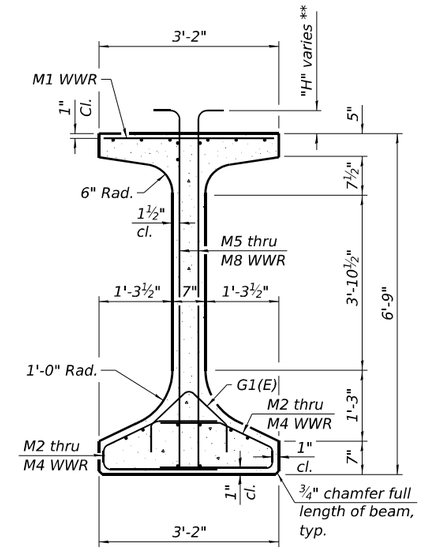

SECTION A-A

** See sheet S-239 for table of "H" dimensions.

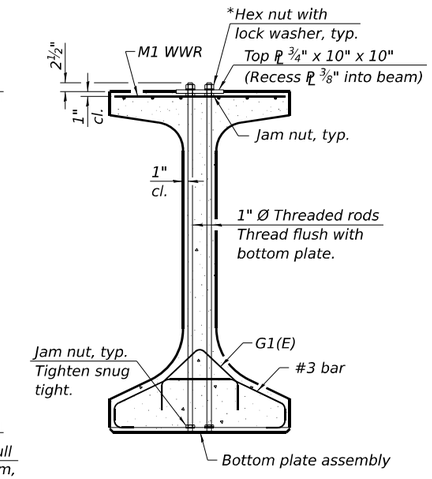

SECTION B-B

* Only tighten sufficiently to compress lock washers

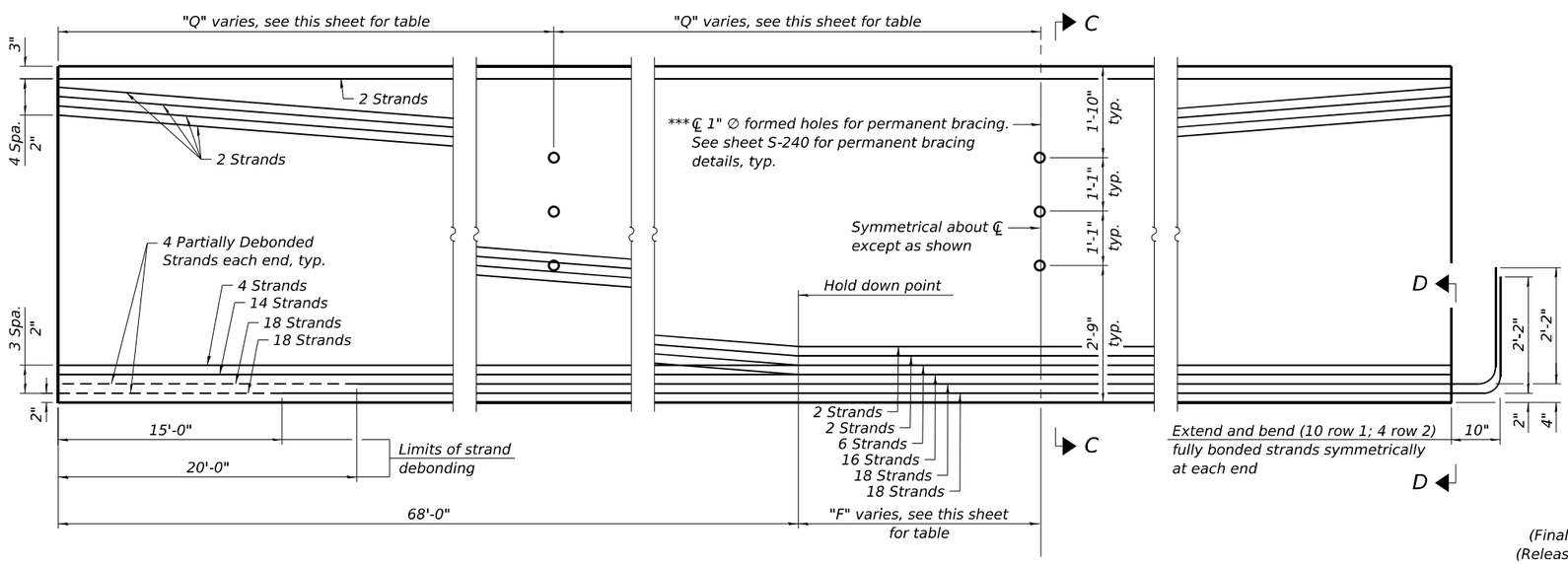

ELEVATION OF BEAM

(Showing prestressing steel)

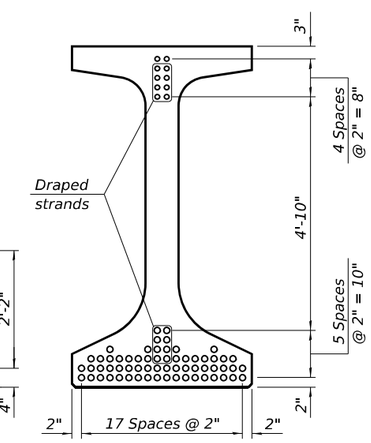

SECTION C-C

(64 - 0.6" Ø 270 ksi strands)
(Final Concrete Compr. Strength, fc = 8,500 psi)
(Release Concrete Compr. Strength, fci = 6,500 psi)

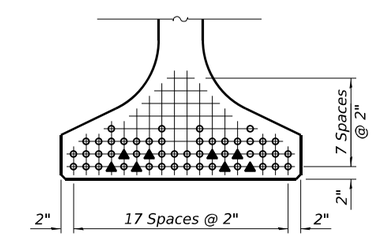

VIEW D-D

○ Fully bonded strand

▲ Partially debonded strand

*** Fabricator shall locate to miss strands within permissible tolerances

SPAN 7 EB BEAM INFORMATION TABLE

Beam	E1	E2	E3	E4	E5	E6	E7	E8	E9	E10
L	170'-0⅛"	170'-0⅛"	170'-0"	170'-0"	170'-0"	170'-0"	170'-0"	170'-0"	170'-0⅛"	170'-0⅛"
F	17'-0"	17'-0"	17'-0"	17'-0"	17'-0"	17'-0"	17'-0"	17'-0"	17'-0"	17'-0"
Q	42'-6"	42'-6"	42'-6"	42'-6"	42'-6"	42'-6"	42'-6"	42'-6"	42'-6"	42'-6"

NOTES:

1. See sheets S-238 and S-239 for additional details and Bill of Material.

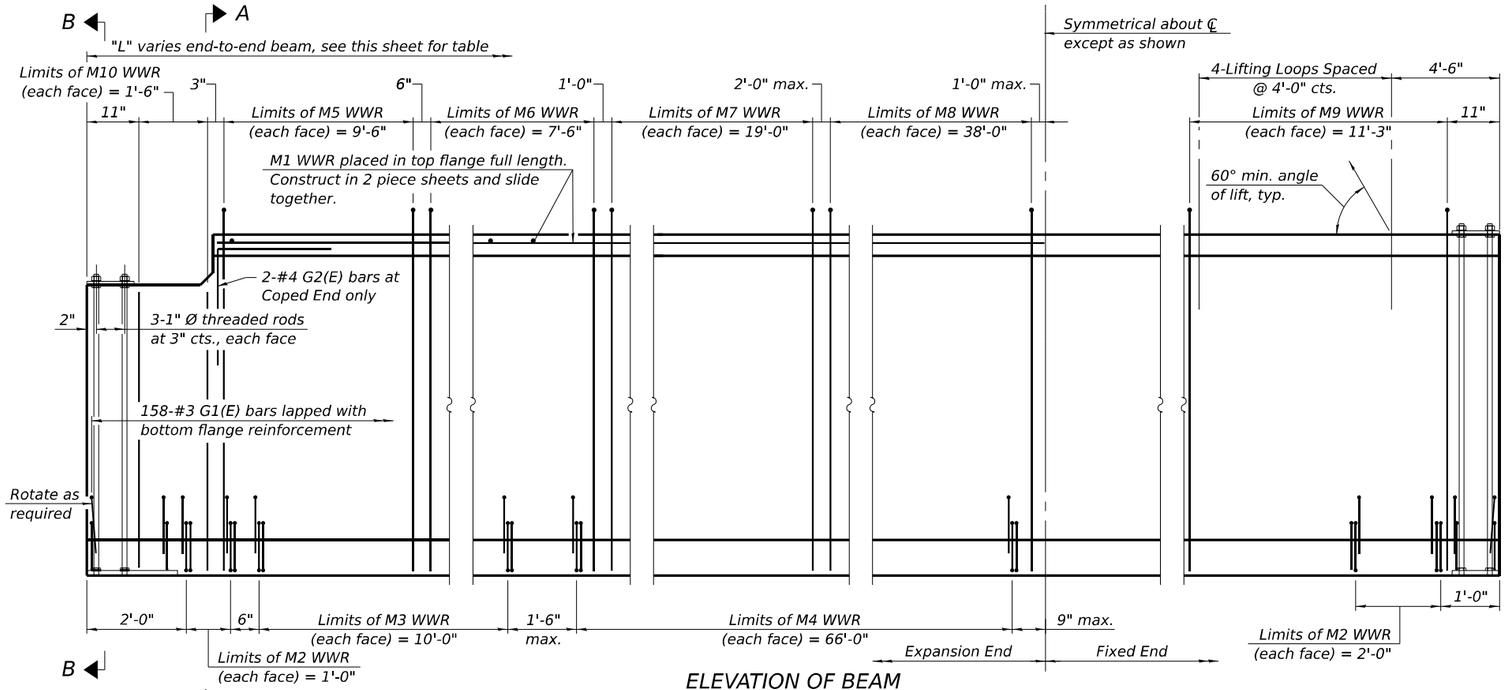

ELEVATION OF BEAM

(Showing reinforcement & dimensions)

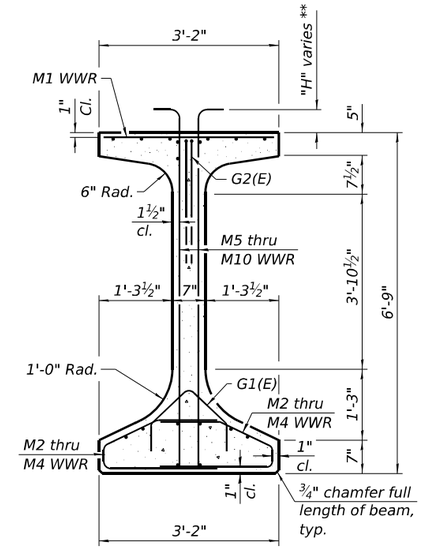

SECTION A-A

** See sheet S-239 for table of "H" dimensions.

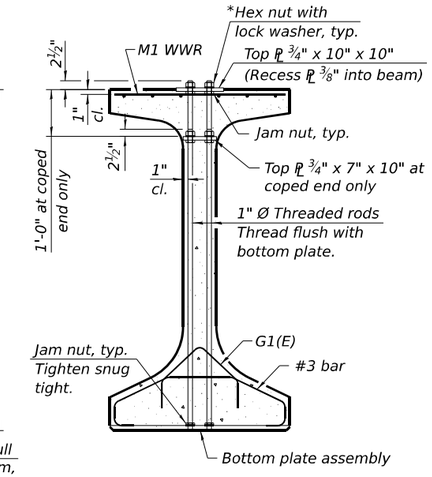

SECTION B-B

* Only tighten sufficiently to compress lock washers

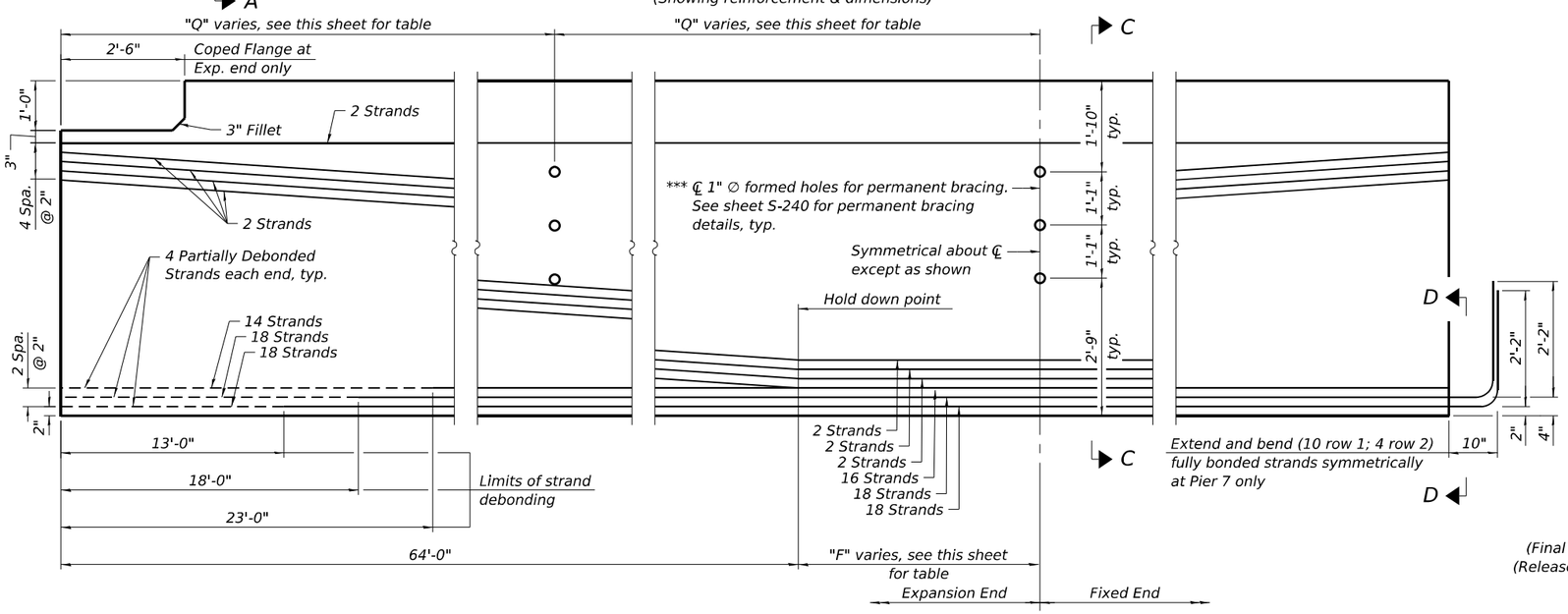

ELEVATION OF BEAM

(Showing prestressing steel)

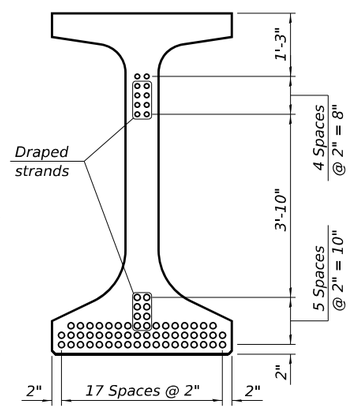

SECTION C-C

(60 - 0.6" Ø 270 ksi strands)
(Final Concrete Compr. Strength, fc = 8,500 psi)
(Release Concrete Compr. Strength, fci = 6,500 psi)

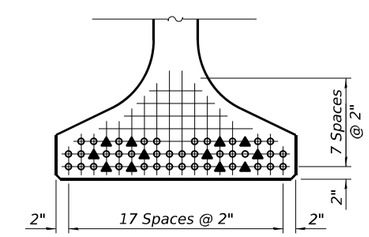

VIEW D-D

○ Fully bonded strand

▲ Partially debonded strand

***Fabricator shall locate to miss strands within permissible tolerances

SPAN 8 EB BEAM INFORMATION TABLE

Beam	E1	E2	E3	E4	E5	E6	E7	E8	E9	E10
L	160'-5¼"	160'-5"	160'-5"	160'-5"	160'-5¼"	160'-5½"	160'-5⅞"	160'-6⅜"	160'-6⅞"	160'-7⅝"
F	16'-2⅝"	16'-2½"	16'-2½"	16'-2½"	16'-2⅝"	16'-2¾"	16'-3"	16'-3¼"	16'-3½"	16'-3⅞"
Q	40'-1¼"	40'-1¼"	40'-1¼"	40'-1¼"	40'-1⅜"	40'-1⅜"	40'-1½"	40'-1⅝"	40'-1¾"	40'-1⅞"

NOTES:

1. See sheets S-238 and S-239 for additional details and Bill of Material.

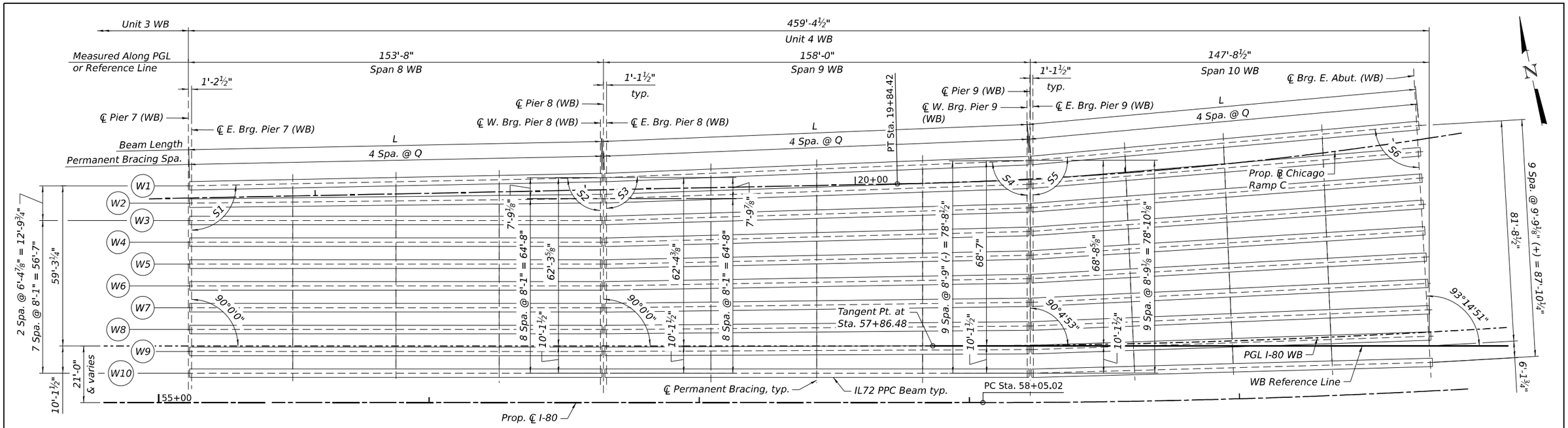

FRAMING PLAN - UNIT 4 WB

NOTES:

1. All beam spacing is measured along ℄ bearing.
2. See sheet S-222 for moment and reaction table variable definitions.
3. See sheets S-229 thru S-231 for beam details and dimensions "L" and "Q".
4. See sheet S-237 for permanent bracing.
5. See sheets S-161, S-163, S-165 and S-167 for continuity diaphragm details.
6. Moments and reactions shown on this sheet correspond to beams W1 and W2.

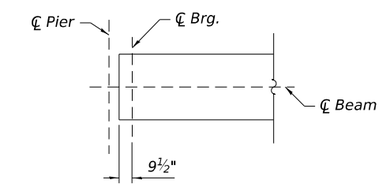

BEAM END EXTENSIONS - PIER 7

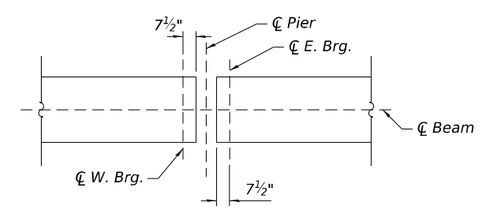

BEAM END EXTENSIONS - PIERS 8 & 9

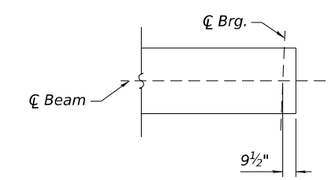

BEAM END EXTENSIONS - E. ABUT.

UNIT 4 WB EXTERIOR BEAM MOMENT TABLE		0.5 Sp. 8	Pier 8	0.5 Sp. 9	Pier 9	0.5 Sp. 10
I	(in^4)	738,236	-	738,236	-	738,236
I'	(in^4)	1,326,704	1,347,964	1,363,874	1,376,694	1,392,625
S_b	(in^3)	22,856	-	22,856	-	22,856
S_b'	(in^3)	29,489	29,665	29,785	29,889	30,013
S_t	(in^3)	18,595	-	18,595	-	18,595
S_t'	(in^3)	49,119	50,752	52,036	53,072	54,399
DC1	(k/')	2.168	-	2.248	-	2.211
M_{DC1}	('k)	6,211	-	6,820	-	5,641
DC2	(k/')	0.391	0.399	0.406	0.406	0.406
M_{DC2}	('k)	664	-945	323	-873	602
DW	(k/')	0.252	0.267	0.281	0.294	0.306
M_{DW}	('k)	423	-617	222	-644	462
LLDF		0.560	0.630	0.630	0.680	0.710
M_{LL+IM}	('k)	2,299	-2,529	2,173	-2,606	2,709

UNIT 4 WB INTERIOR BEAM MOMENT TABLE		0.5 Sp. 8	Pier 8	0.5 Sp. 9	Pier 9	0.5 Sp. 10
I	(in^4)	738,236	-	738,236	-	738,236
I'	(in^4)	1,386,001	1,405,885	1,428,240	1,449,515	1,475,979
S_b	(in^3)	22,856	-	22,856	-	22,856
S_b'	(in^3)	29,961	30,111	30,279	30,433	30,625
S_t	(in^3)	18,595	-	18,595	-	18,595
S_t'	(in^3)	53,846	55,547	57,521	59,479	62,005
DC1	(k/')	2.101	-	2.102	-	2.105
M_{DC1}	('k)	6,016	-	6,375	-	5,406
DC2	(k/')	0.391	0.399	0.406	0.406	0.406
M_{DC2}	('k)	664	-944	321	-876	607
DW	(k/')	0.359	0.389	0.418	0.441	0.463
M_{DW}	('k)	575	-947	414	-1,032	676
LLDF		0.610	0.680	0.680	0.720	0.750
M_{LL+IM}	('k)	2,540	-2,730	2345	-2,765	2,873

UNIT 4 WB EXTERIOR BEAM REACTION TABLE		Pier 7	Pier 8 Span 8	Pier 8 Span 9	Pier 9 Span 9	Pier 9 Span 10	E. Abut.
	LLDF	0.530	0.610	0.610	0.680	0.680	0.730
	OCF	-	-	-	1.01	1.01	1.02
	R_{DC1} (k)	166.1	171.4	182.4	186.1	166.1	160.8
*	R_{DC2} (k)	23.7	34.5	34.5	33.6	33.6	22.9
*	R_{DW} (k)	15.2	22.8	22.8	24.6	24.6	17.4
*	R_{LL} (k)	58.6	68.2	68.2	74.5	74.5	79.0
*	R_{IM} (k)	11.6	11.7	11.7	12.9	12.9	15.9
**	R_{Total} (Strength I)(Impact) (k)	402.1	453.1	467.5	487.6	461.4	443.0
**	R_{Total} (Strength I)(No Impact) (k)	380.8	431.5	446.0	463.9	437.6	413.6

UNIT 4 WB INTERIOR BEAM REACTION TABLE		Pier 7	Pier 8 Span 8	Pier 8 Span 9	Pier 9 Span 9	Pier 9 Span 10	E. Abut.
	LLDF	0.700	0.820	0.820	0.880	0.880	0.960
	OCF	-	-	-	1.01	1.01	1.02
	R_{DC1} (k)	162.8	174.2	178.8	180.0	167.1	156.5
*	R_{DC2} (k)	23.7	34.5	34.5	33.7	33.7	23.0
*	R_{DW} (k)	21.4	35.2	35.2	39.0	39.0	26.0
*	R_{LL} (k)	77.4	91.7	91.7	96.5	96.5	104.0
*	R_{IM} (k)	15.4	15.8	15.8	16.7	16.7	21.0
**	R_{Total} (Strength I)(Impact) (k)	449.0	526.7	532.8	549.9	532.9	506.1
**	R_{Total} (Strength I)(No Impact) (k)	420.7	497.8	503.8	519.1	502.2	467.6

*At continuous piers, reactions from composite loads are assumed to be equally distributed to each bearing line

**Limit states for reaction shown include a load modifier factor of 1.05 relating to operational classification for an essential bridge

BEAM SKEWS TABLE						
Beam	S1	S2	S3	S4	S5	S6
W1	91°8'45"	88°51'15"	92°17'17"	87°47'36"	95°5'28"	88°4'30"
W2	90°38'6"	89°21'54"	91°57'4"	88°7'49"	94°40'43"	88°29'15"
W3	90°0'0"	90°0'0"	91°42'26"	88°22'27"	94°16'8"	88°53'50"
W4	90°0'0"	90°0'0"	91°27'48"	88°37'5"	93°51'42"	89°18'16"
W5	90°0'0"	90°0'0"	91°13'10"	88°51'43"	93°27'25"	89°42'23"
W6	90°0'0"	90°0'0"	90°58'32"	89°6'21"	93°3'18"	90°6'39"
W7	90°0'0"	90°0'0"	90°43'54"	89°20'59"	92°39'21"	90°30'37"
W8	90°0'0"	90°0'0"	90°29'16"	89°35'37"	92°15'34"	90°54'24"
W9	90°0'0"	90°0'0"	90°14'38"	89°50'15"	91°51'56"	91°18'2"
W10	90°0'0"	90°0'0"	90°0'0"	90°4'53"	91°28'28"	91°41'30"

WSP USA Inc.
30 N. LASALLE STREET
SUITE 4200
CHICAGO, IL 60602
TEL: (312) 782-8150
FAX: (312) 782-1684

USER NAME = USSJ696614	DESIGNED - SJJ	REVISED -	
	CHECKED - PSK	REVISED -	
PLOT SCALE = 36:8.0000 ':" / in.	DRAWN - SJJ	REVISED -	
PLOT DATE = 11/5/2025	CHECKED - PSK	REVISED -	

STATE OF ILLINOIS
DEPARTMENT OF TRANSPORTATION

FRAMING PLAN - UNIT 4 WB
STRUCTURE NUMBER 099-8309 WB AND 099-8325 EB

SHEET S-228 OF S-333 SHEETS

F.A.I RTE.	SECTION	COUNTY	TOTAL SHEETS	SHEET NO.
I-80	FAI 80 21 STRUCTURE 2	WILL	1230	809
		CONTRACT NO. 62R23		
	ILLINOIS	FED. AID PROJECT		

MODEL: Sheet
FILE NAME: pw://transystems-pw.bentley.com:transyscorp-pw1-hosted/Documents/Projects_2018/CH401/401180022/03-WSP/CAD/62R23-RB-1/Sheets/Structural/0998309-62R23-S607-BM401.dgn

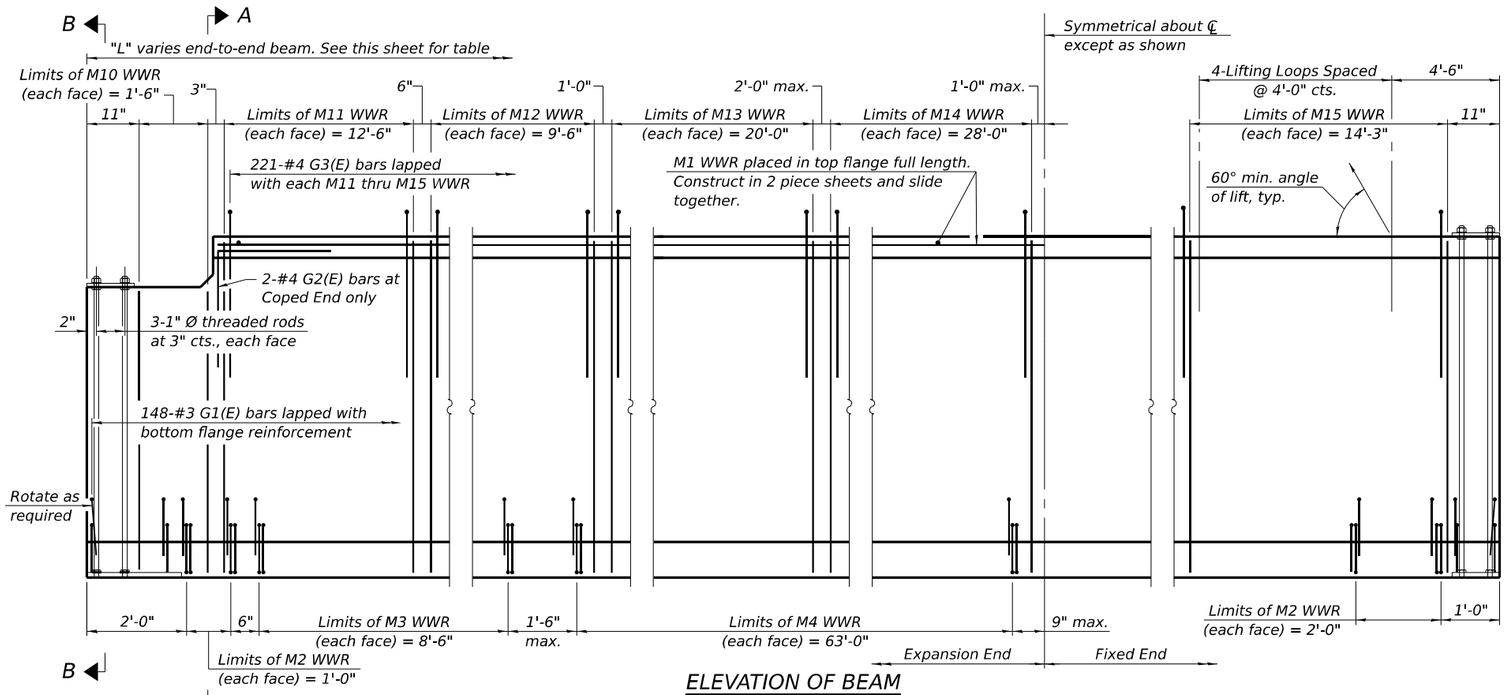

ELEVATION OF BEAM

(Showing reinforcement & dimensions)

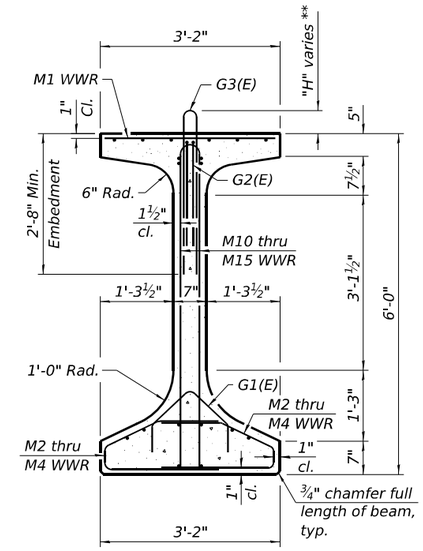

SECTION A-A

** See sheet S-236 for table of "H" dimensions.

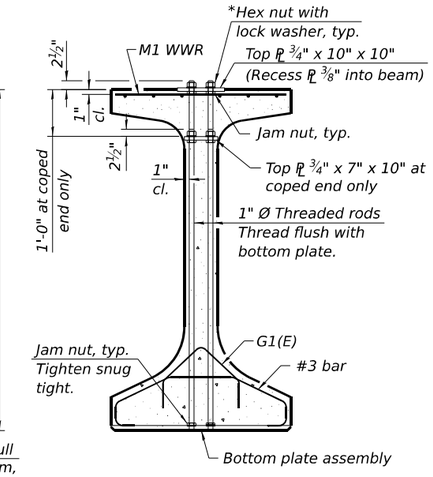

SECTION B-B

* Only tighten sufficiently to compress lock washers

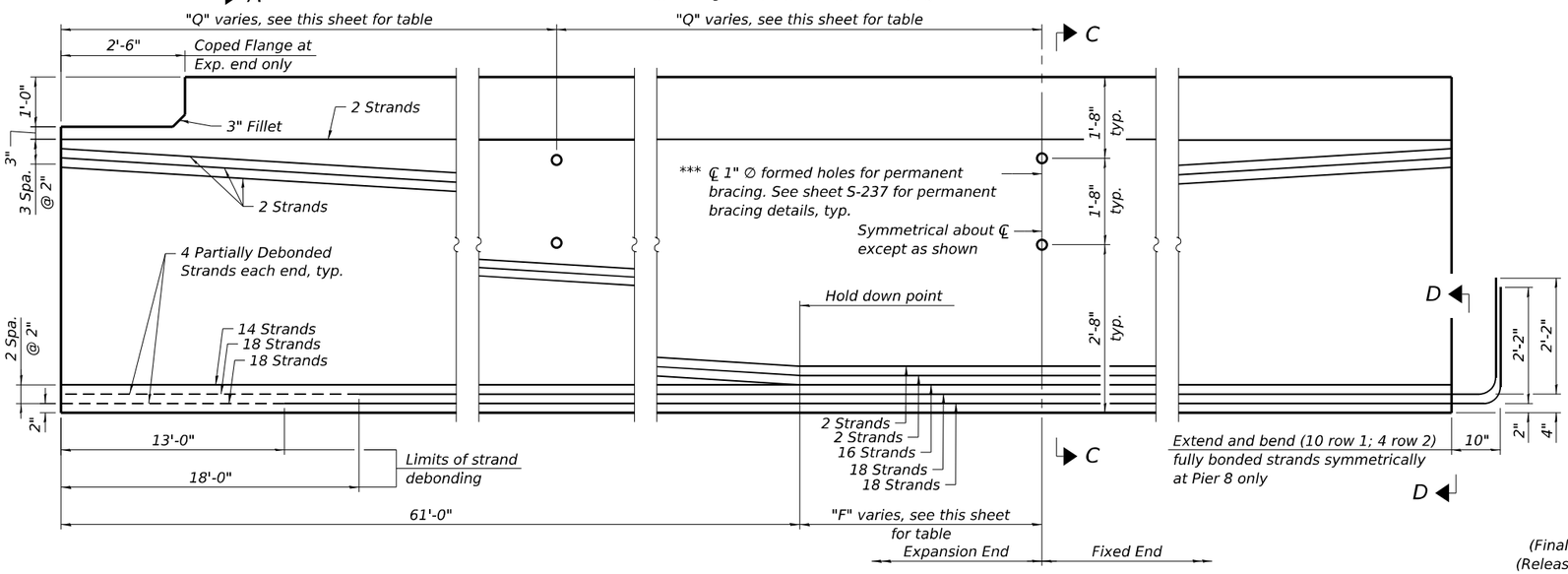

ELEVATION OF BEAM

(Showing prestressing steel)

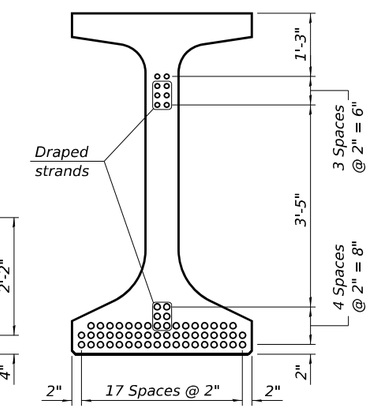

SECTION C-C

(58 - 0.6" Ø 270 ksi strands)
(Final Concrete Compr. Strength, fc = 8,500 psi)
(Release Concrete Compr. Strength, fci = 6,500 psi)

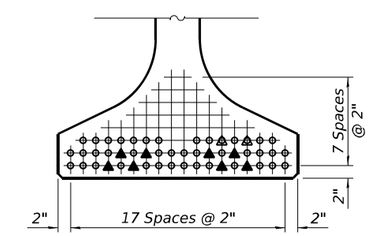

VIEW D-D

○ Fully bonded strand

▲ Partially debonded strand

*** Fabricator shall locate to miss strands

SPAN 8 WB BEAM INFORMATION TABLE

Beam	W1	W2	W3	W4	W5	W6	W7	W8	W9	W10
L	152'-9⅜"	152'-9⅛"	152'-9"	152'-9"	152'-9"	152'-9"	152'-9"	152'-9"	152'-9"	152'-9"
F	15'-4¾"	15'-4⅝"	15'-4½"	15'-4½"	15'-4½"	15'-4½"	15'-4½"	15'-4½"	15'-4½"	15'-4½"
Q	38'-2⅜"	38'-2¼"	38'-2¼"	38'-2¼"	38'-2¼"	38'-2¼"	38'-2¼"	38'-2¼"	38'-2¼"	38'-2¼"

NOTES:

1. See sheets S-235 and S-236 for additional details and Bill of Material.

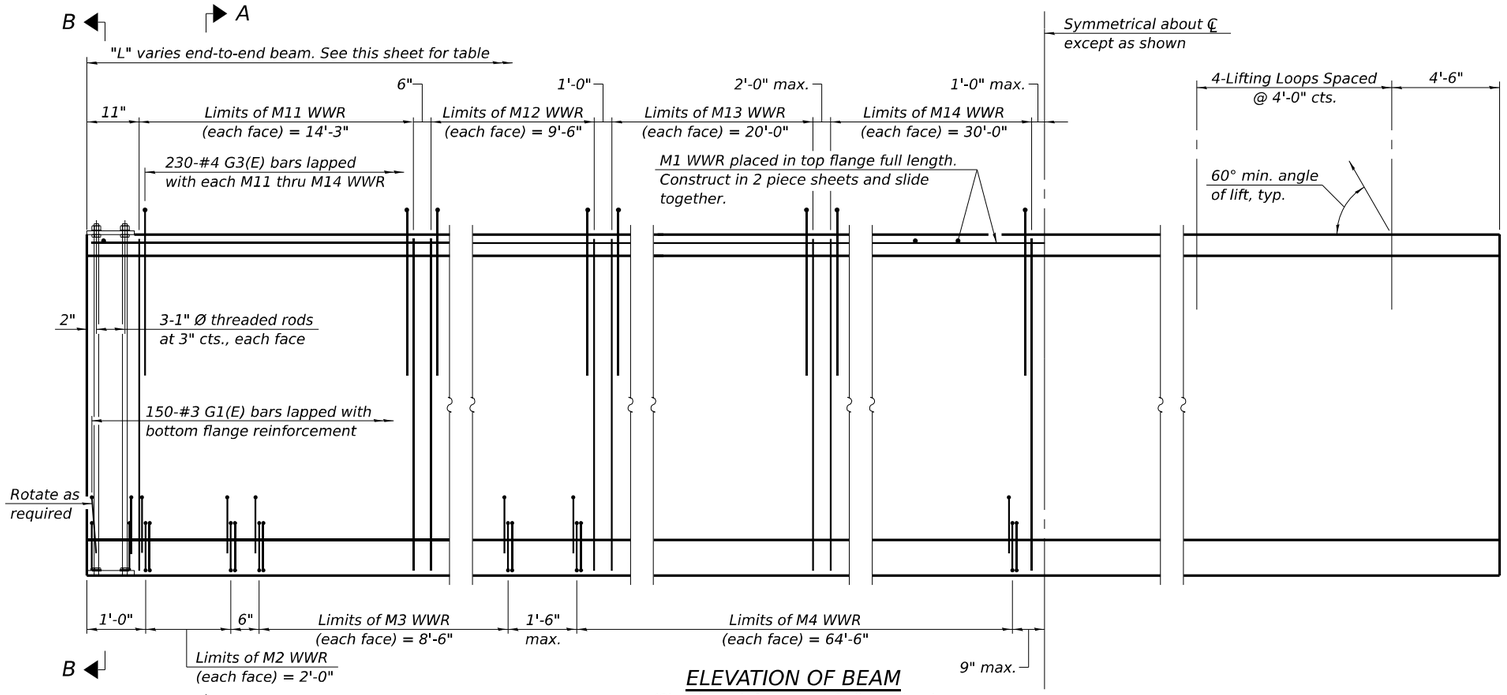

ELEVATION OF BEAM
(Showing reinforcement & dimensions)

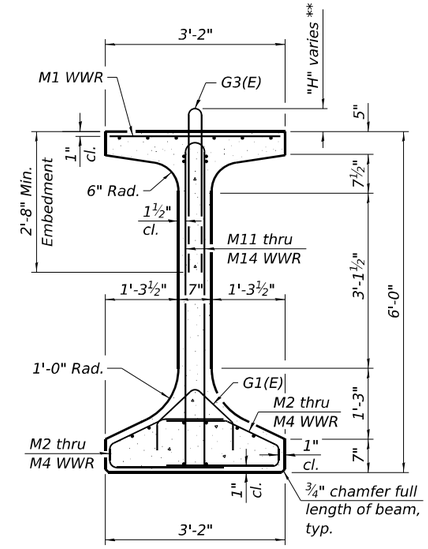

SECTION A-A
** See sheet S-236 for table of "H" dimensions.

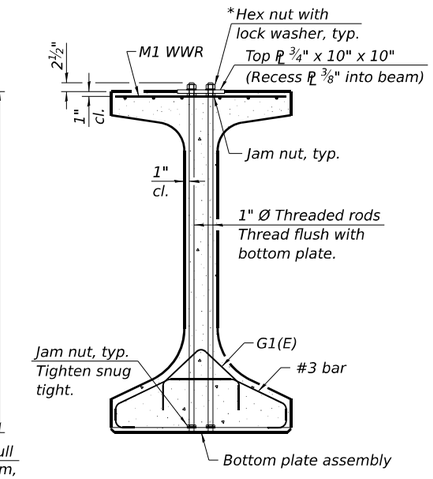

SECTION B-B
* Only tighten sufficiently to compress lock washers

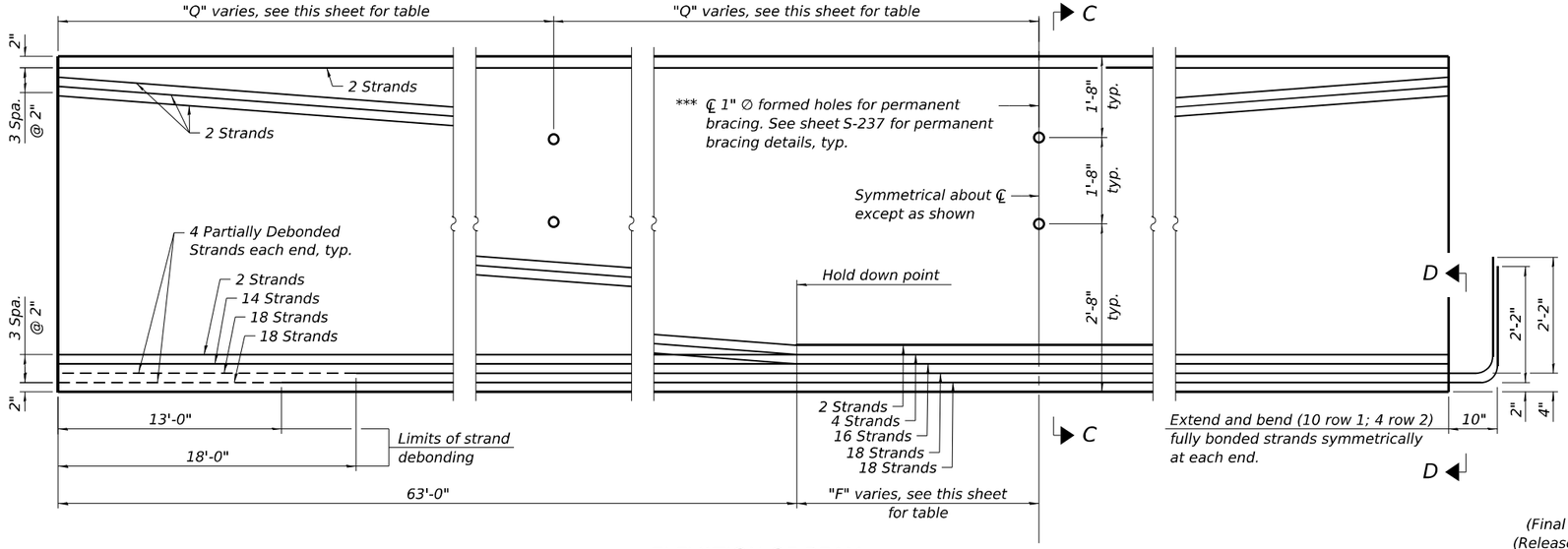

ELEVATION OF BEAM
(Showing prestressing steel)

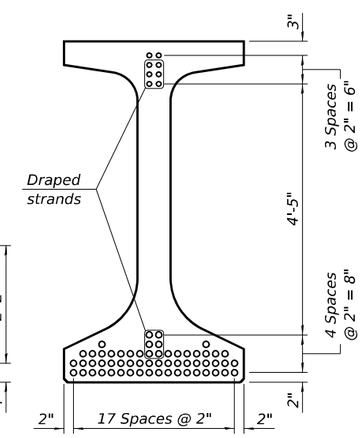

SECTION C-C
(60 - 0.6" Ø 270 ksi strands)
(Final Concrete Compr. Strength, fc = 8,500 psi)
(Release Concrete Compr. Strength, fci = 6,500 psi)

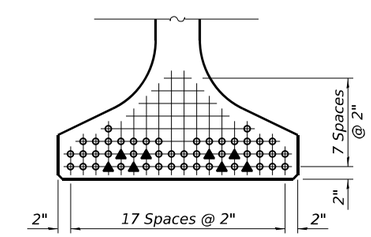

VIEW D-D
○ Fully bonded strand

▲ Partially debonded strand

*** Fabricator shall locate to miss strands

SPAN 9 WB BEAM INFORMATION TABLE

Beam	W1	W2	W3	W4	W5	W6	W7	W8	W9	W10
L	157'-0⅜"	157'-0⅛"	157'-0"	156'-11⅞"	156'-11⅞"	156'-11⅞"	156'-11⅞"	157'-0"	157'-0"	157'-0⅛"
F	15'-6⅛"	15'-6"	15'-6"	15'-6"	15'-5⅞"	15'-5⅞"	15'-6"	15'-6"	15'-6"	15'-6⅛"
Q	39'-3⅛"	39'-3"	39'-3"	39'-3"	39'-3"	39'-3"	39'-3"	39'-3"	39'-3"	39'-3"

NOTES:
1. See sheets S-235 and S-236 for additional details and Bill of Material.

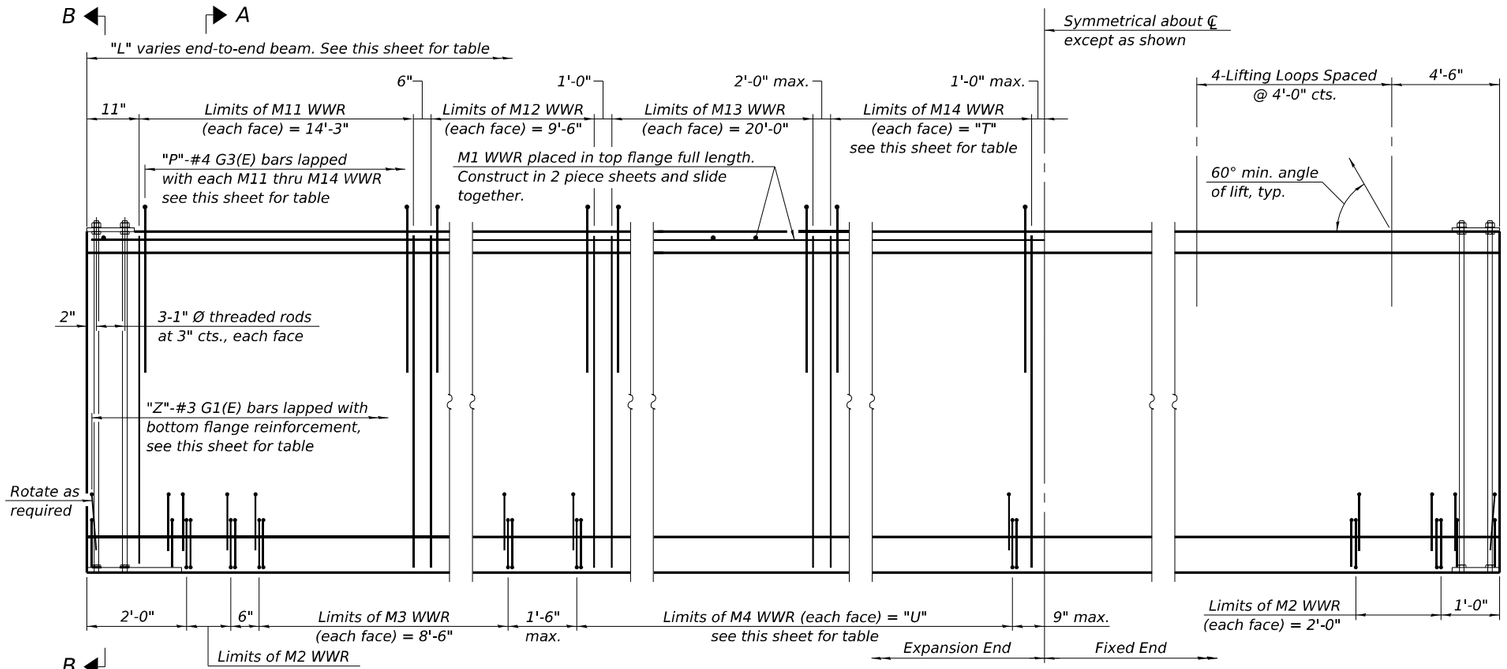

ELEVATION OF BEAM

(Showing reinforcement & dimensions)

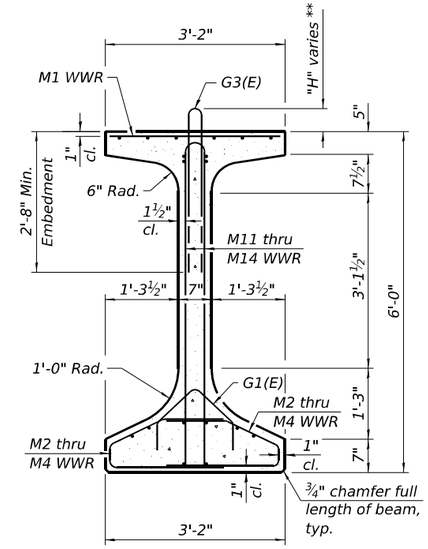

SECTION A-A

** See sheet S-236 for table of "H" dimensions.

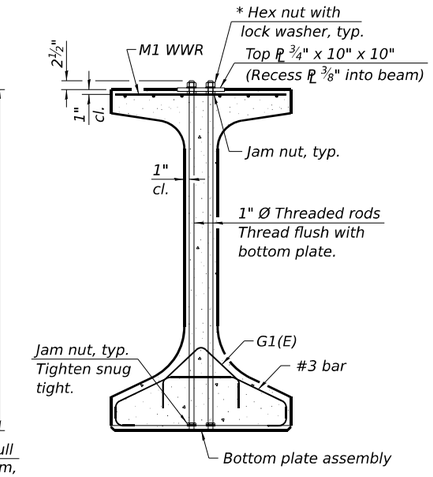

SECTION B-B

* Only tighten sufficiently to compress lock washers

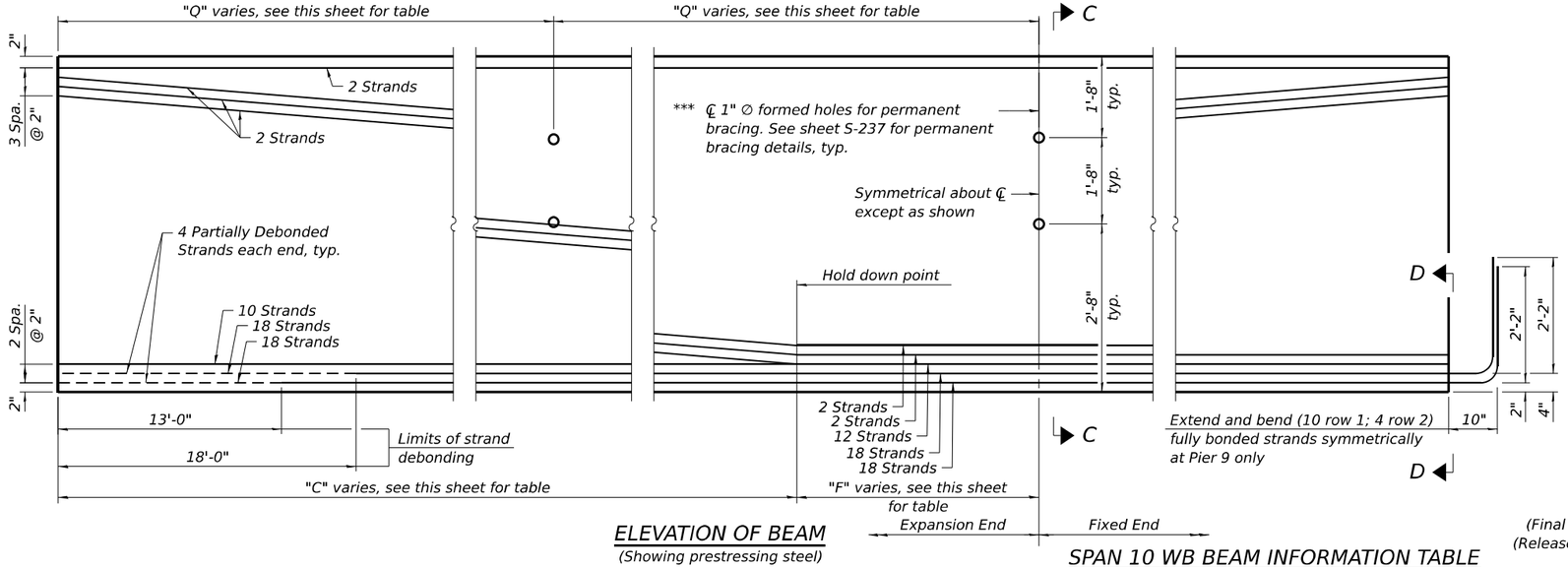

ELEVATION OF BEAM

(Showing prestressing steel)

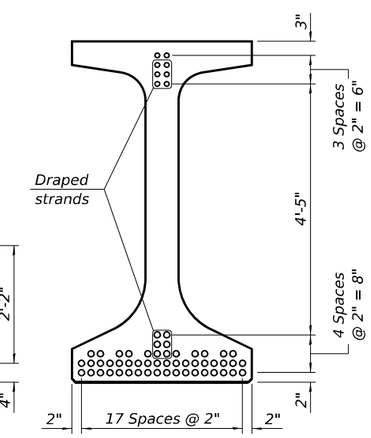

SECTION C-C

(54 - 0.6" Ø 270 ksi strands)
(Final Concrete Compr. Strength, fc = 8,500 psi)
(Release Concrete Compr. Strength, fci = 6,500 psi)

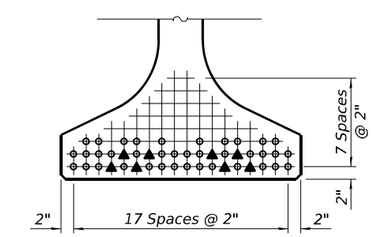

VIEW D-D

○ Fully bonded strand

▲ Partially debonded strand

*** Fabricator shall locate to miss strands

SPAN 10 WB BEAM INFORMATION TABLE

Beam	W1	W2	W3	W4	W5	W6	W7	W8	W9	W10
L	144'-0⅝"	144'-6"	144'-11½"	145'-5⅛"	145'-10⅞"	146'-4⅝"	146'-10½"	147'-4½"	147'- 10½"	148'-4⅜"
C	57'-6"	58'-0"	58'-0"	58'-0"	58'-6"	58'-6"	59'-0"	59'-0"	59'-0"	59'-6"
F	14'-6¼"	14'-3"	14'-5¾"	14'-8⅝"	14'-5⅜"	14'-8⅜"	14'-5¼"	14'-8¼"	14'-11¼"	14'-8⅜"
P	224	224	224	224	224	226	226	226	226	226
Q	36'-0⅛"	36'-1½"	36'-2⅞"	36'-4¼"	36'-5¾"	36'-7⅛"	36'-8⅝"	36'-10⅛"	36'-11⅝"	37'-1⅛"
T	24'-0"	24'-0"	24'-0"	24'-0"	24'-0"	26'-0"	26'-0"	26'-0"	26'-0"	26'-0"
U	58'-6"	58'-6"	58'-6"	58'-6"	60'-0"	60'-0"	60'-0"	60'-0"	60'-0"	60'-0"
Z	142	142	142	142	144	144	144	144	144	144

NOTES:

1. See sheets S-235 and S-236 for additional details and Bill of Material.

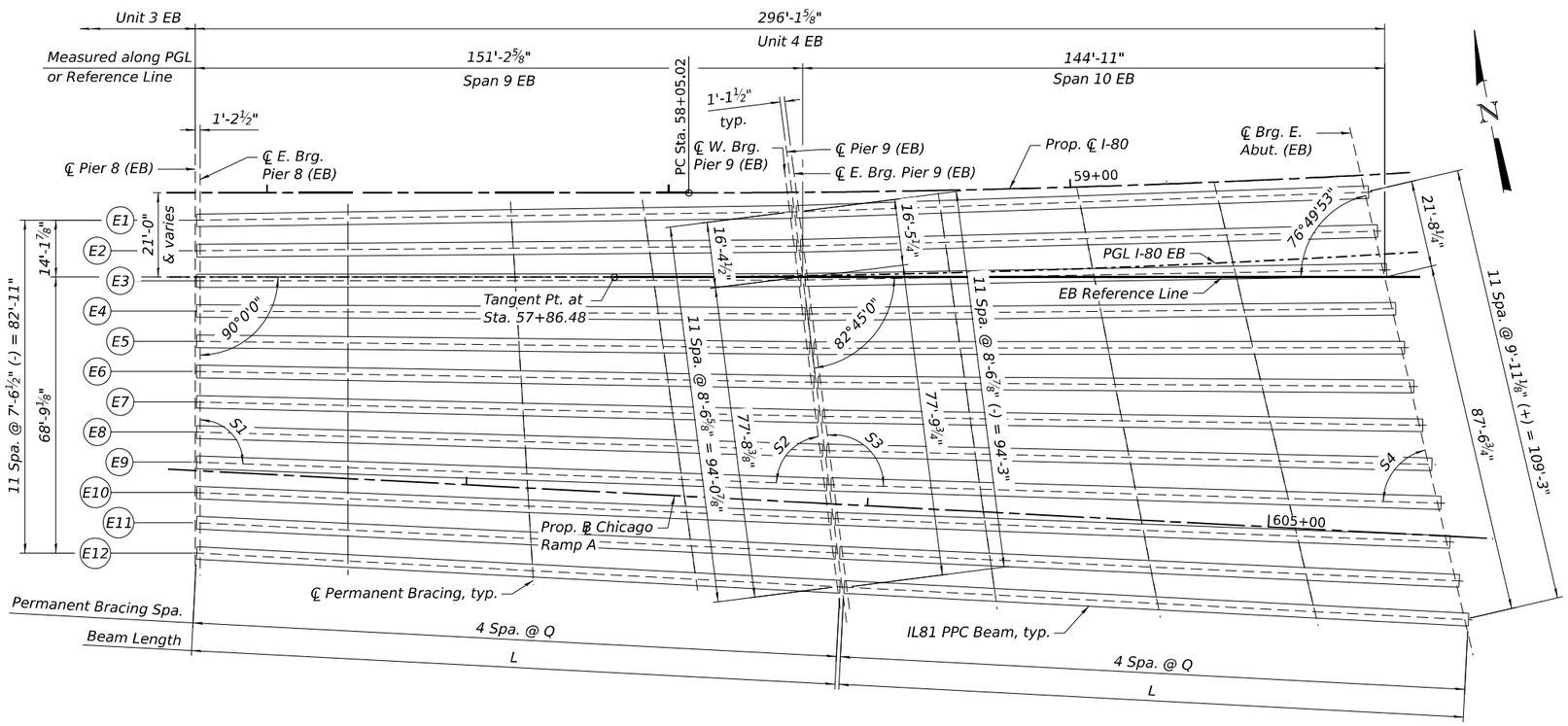

FRAMING PLAN - UNIT 4 EB

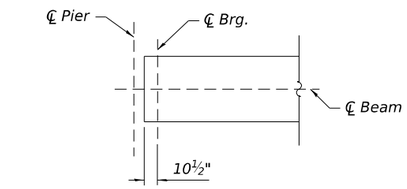

BEAM END EXTENSIONS - PIER 8

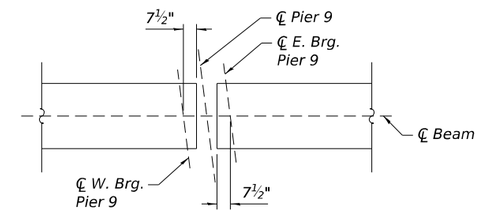

BEAM END EXTENSIONS - PIER 9

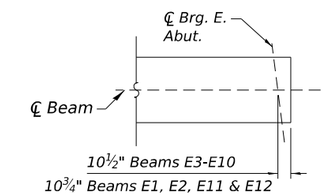

BEAM END EXTENSIONS - E. ABUT.

UNIT 4 EB EXTERIOR BEAM MOMENT TABLE		0.5 Sp. 9	Pier 9	0.5 Sp. 10
I	(in⁴)	991,193	-	991,193
I'	(in⁴)	1,768,865	1,783,437	1,804,451
S_b	(in³)	27,223	-	27,223
S_b'	(in³)	34,923	35,024	35,174
S_t	(in³)	22,229	-	22,229
S_t'	(in³)	58,282	59,290	60,756
DC1	(k/')	2.238	-	2.238
M_{DC1}	('k)	7,063	-	6,657
DC2	(k/')	0.399	0.399	0.399
M_{DC2}	('k)	672	-1,205	581
DW	(k/')	0.275	0.288	0.300
M_{DW}	('k)	444	-868	459
LLDF		0.620	0.670	0.690
M_{LL+IM}	('k)	2,683	-2,929	2,863

UNIT 4 EB INTERIOR BEAM MOMENT TABLE		0.5 Sp. 9	Pier 9	0.5 Sp. 10
I	(in⁴)	991,193	-	991,193
I'	(in⁴)	1,851,339	1,866,281	1,904,286
S_b	(in³)	27,223	-	27,223
S_b'	(in³)	35,493	35,596	35,849
S_t	(in³)	22,229	-	22,229
S_t'	(in³)	64,193	65,323	68,303
DC1	(k/')	2.152	-	2.154
M_{DC1}	('k)	6,698	-	6,304
DC2	(k/')	0.399	0.399	0.399
M_{DC2}	('k)	663	-1,187	571
DW	(k/')	0.399	0.425	0.451
M_{DW}	('k)	625	-1,264	690
LLDF		0.660	0.710	0.740
M_{LL+IM}	('k)	2,827	-2,903	3,036

BEAM SKEWS TABLE				
Beam	S1	S2	S3	S4
E1	89°11'13"	83°33'47"	95°17'32"	78°47'21"
E2	89°33'31"	83°11'29"	95°46'49"	78°18'4"
E3	89°55'31"	82°49'29"	96°15'38"	77°49'15"
E4	90°17'12"	82°27'48"	96°43'59"	77°20'54"
E5	90°38'34"	82°6'26"	97°11'53"	76°53'1"
E6	90°59'39"	81°45'21"	97°39'19"	76°25'34"
E7	91°20'25"	81°24'35"	98°6'20"	75°58'33"
E8	91°40'54"	81°4'6"	98°32'54"	75°31'59"
E9	92°1'6"	80°43'54"	98°59'3"	75°5'50"
E10	92°21'0"	80°24'0"	99°24'47"	74°40'7"
E11	92°40'38"	80°4'22"	99°50'5"	74°14'48"
E12	93°0'0"	79°45'0"	100°15'0"	73°49'53"

UNIT 4 EB EXTERIOR BEAM REACTION TABLE		Pier 8	Pier 9 Span 9	Pier 9 Span 10	E Abut.
	LLDF	0.590	0.680	0.680	0.770
	OCF	-	1.04	1.06	1.06
	R_{DC1} (k)	179.9	186.3	181.2	175.4
*	R_{DC2} (k)	24.4	39.5	39.5	22.9
*	R_{DW} (k)	16.6	28.4	28.4	17.5
*	R_{LL} (k)	66.0	79.0	79.0	84.9
*	R_{IM} (k)	13.9	13.9	13.9	16.9
**	R_{Total} (Strength I)(Impact) (k)	439.4	510.5	503.8	474.8
**	R_{Total} (Strength I)(No Impact) (k)	415.5	486.2	479.2	443.8

UNIT 4 EB INTERIOR BEAM REACTION TABLE		Pier 8	Pier 9 Span 9	Pier 9 Span 10	E Abut.
	LLDF	0.780	0.880	0.880	0.980
	OCF	-	1.04	1.06	1.06
	R_{DC1} (k)	174.3	186.6	181.5	170.4
*	R_{DC2} (k)	24.3	39.2	39.2	22.7
*	R_{DW} (k)	23.8	41.7	41.7	26.3
*	R_{LL} (k)	87.0	101.8	102.9	107.7
*	R_{IM} (k)	17.9	17.2	17.2	21.5
**	R_{Total} (Strength I)(Impact) (k)	489.5	580.5	576.3	532.3
**	R_{Total} (Strength I)(No Impact) (k)	458.0	549.0	544.4	492.8

*At continuous piers, reactions from composite loads are assumed to be equally distributed to each bearing line
**Limit states for reaction shown include a load modifier factor of 1.05 relating to operational classification for an essential bridge

NOTES:

1. All beam spacing is measured along ℄ bearing.
2. See sheet S-222 for moment and reaction table variable definitions.
3. See sheets S-233 and S-234 for beam details and dimensions "L" and "Q".
4. See sheet S-240 for permanent bracing details.
5. See sheets S-164, S-166, and S-168 for continuity diaphragm details.
6. Moments and reactions shown on this sheet correspond to beams E11 and E12.

WSP USA Inc.
30 N. LASALLE STREET
SUITE 4200
CHICAGO, IL 60602
TEL: (312) 782-8150
FAX: (312) 782-1684

USER NAME = USSJ696614	DESIGNED - SJJ	REVISED -	
	CHECKED - PSK	REVISED -	
PLOT SCALE = 36:8.0000 ':' / in.	DRAWN - SJJ	REVISED -	
PLOT DATE = 11/5/2025	CHECKED - PSK	REVISED -	

STATE OF ILLINOIS
DEPARTMENT OF TRANSPORTATION

FRAMING PLAN - UNIT 4 EB
STRUCTURE NUMBER 099-8309 WB AND 099-8325 EB

SHEET S-232 OF S-333 SHEETS

F.A.I RTE.	SECTION	COUNTY	TOTAL SHEETS	SHEET NO.
I-80	FAI 80 21 STRUCTURE 2	WILL	1230	813
		CONTRACT NO. 62R23		
	ILLINOIS	FED. AID PROJECT		

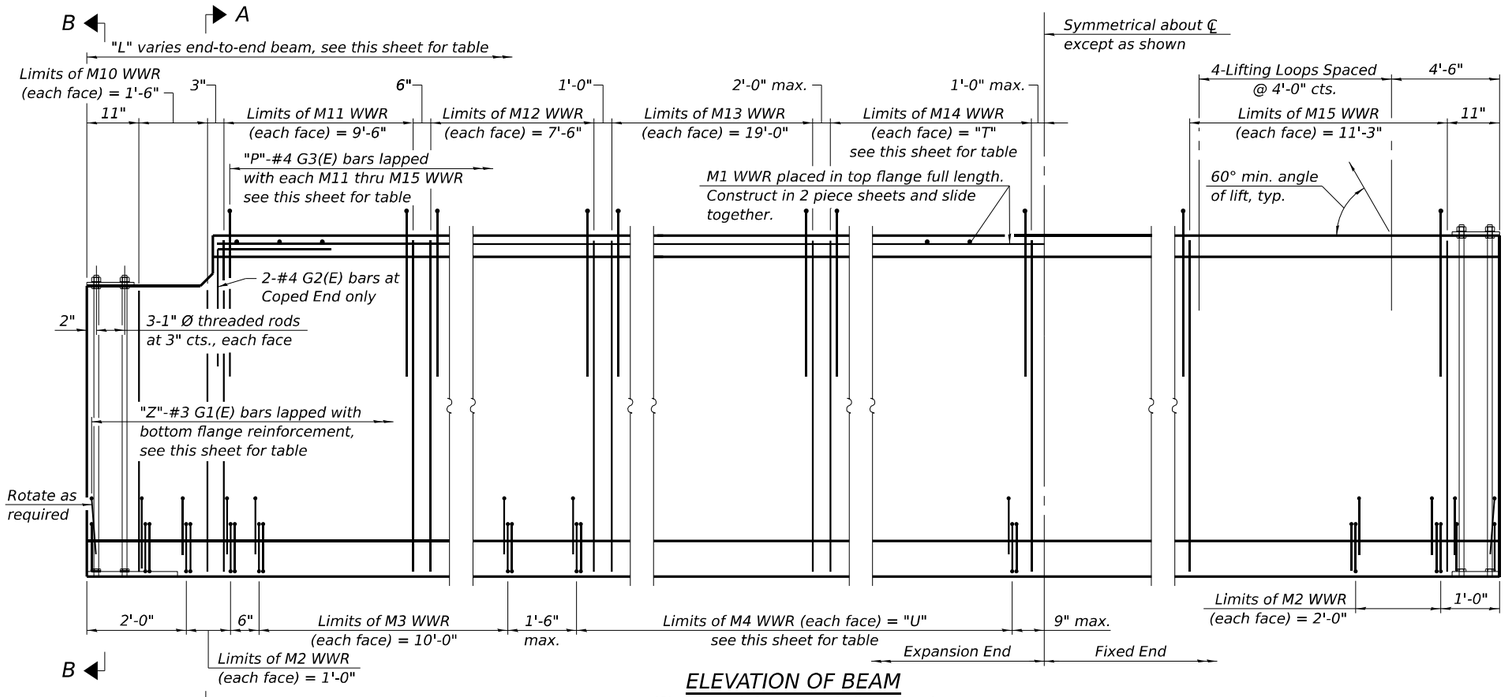

ELEVATION OF BEAM

(Showing reinforcement & dimensions)

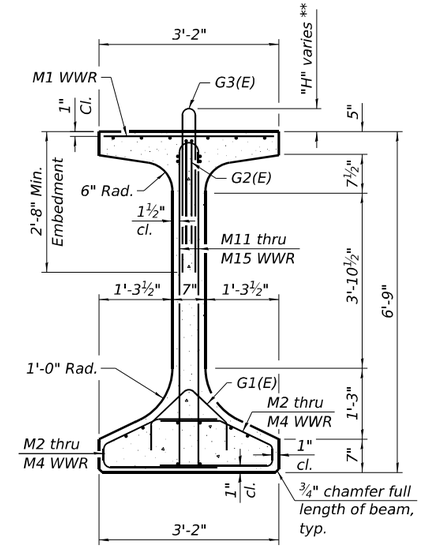

SECTION A-A

** See sheet S-239 for table of "H" dimensions.

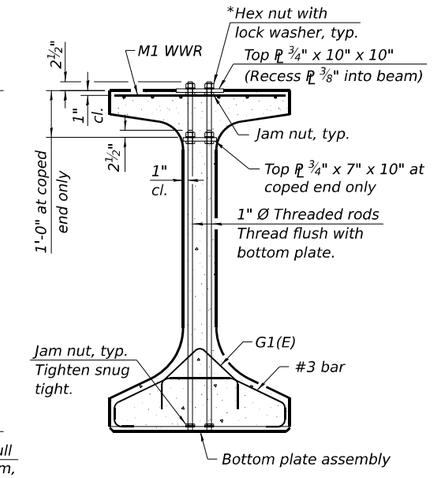

SECTION B-B

* Only tighten sufficiently to compress lock washers

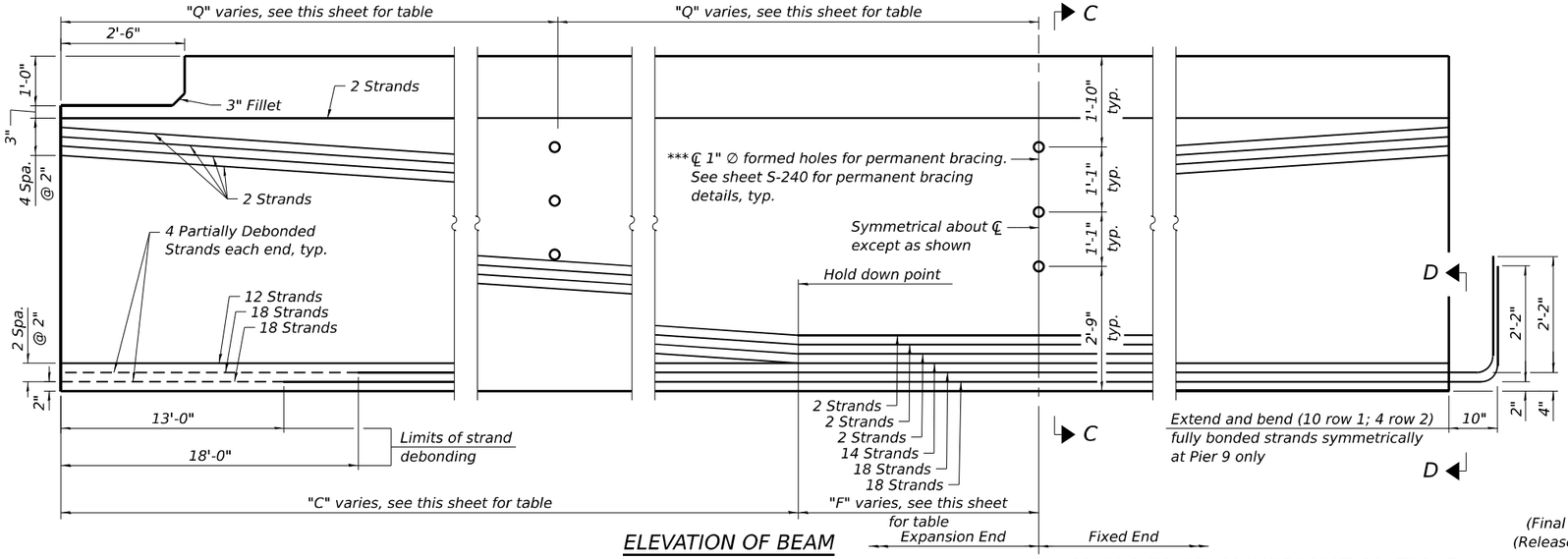

ELEVATION OF BEAM

(Showing prestressing steel)

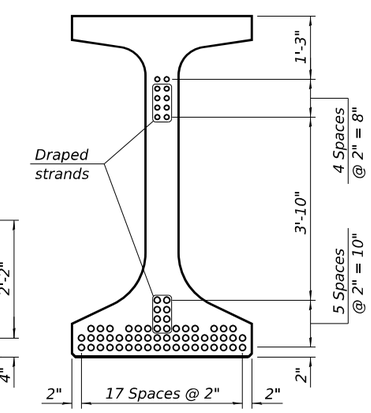

SECTION C-C

(58 - 0.6" Ø 270 ksi strands)
(Final Concrete Compr. Strength, fc = 8,500 psi)
(Release Concrete Compr. Strength, fci = 6,500 psi)

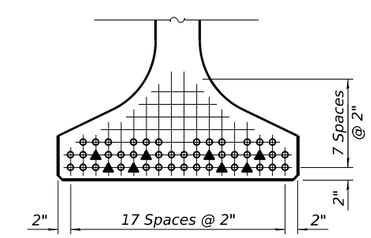

VIEW D-D

○ Fully bonded strand

▲ Partially debonded strand

SPAN 9 EB BEAM INFORMATION TABLE

Beam	E1	E2	E3	E4	E5	E6	E7	E8	E9	E10	E11	E12
L	148'-3⅞"	149'-4¾"	150'-5⅝"	151'-6⅝"	152'-7⅝"	153'-8¾"	154'-10"	155'-11¼"	157'-0½"	158'-1⅞"	159'-3⅜"	160'-4⅞"
C	59'-6"	60'-0"	60'-0"	60'-6"	61'-0"	61'-6"	62'-0"	62'-6"	63'-0"	63'-6"	63'-6"	64'-0"
F	14'-8"	14'-8⅜"	15'-2⅞"	15'-3⅜"	15'-3⅞"	15'-4⅜"	15'-5"	15'-5⅝"	15'-6¼"	15'-7"	16'-1⅝"	16'-2½"
P	191	191	193	193	193	193	195	195	195	195	197	197
Q	37'-1"	37'-4¼"	37'-7⅜"	37'-10⅝"	38'-1⅞"	38'-5¼"	38'-8½"	38'-11⅞"	39'-3⅛"	39'-6½"	39'-9⅞"	40'-1¼"
T	32'-0"	32'-0"	34'-0"	34'-0"	34'-0"	34'-0"	36'-0"	36'-0"	36'-0"	36'-0"	38'-0"	38'-0"
U	58'-6"	60'-0"	60'-0"	61'-6"	61'-6"	61'-6"	63'-0"	63'-0"	63'-0"	64'-6"	64'-6"	64'-6"
Z	148	150	150	152	152	152	154	154	154	156	156	156

***Fabricator shall locate to miss strands within permissible tolerances

NOTES:

1. See sheets S-238 and S-239 for additional details and Bill of Material.

WSP USA Inc.
30 N. LASALLE STREET
SUITE 4200
CHICAGO, IL 60602
TEL: (312) 782-8150
FAX: (312) 782-1684

USER NAME = USSJ696614	DESIGNED - SJJ	REVISED -	
	CHECKED - PSK	REVISED -	
PLOT SCALE = 0:2.0000 ':" / in.	DRAWN - SJJ	REVISED -	
PLOT DATE = 11/5/2025	CHECKED - PSK	REVISED -	

STATE OF ILLINOIS
DEPARTMENT OF TRANSPORTATION

IL81 BEAM - UNIT 4 EB - SPAN 9
STRUCTURE NUMBER 099-8309 WB AND 099-8325 EB

SHEET S-233 OF S-333 SHEETS

F.A.I RTE.	SECTION	COUNTY	TOTAL SHEETS	SHEET NO.
I-80	FAI 80 21 STRUCTURE 2	WILL	1230	814
		CONTRACT NO. 62R23		
		ILLINOIS	FED. AID PROJECT	

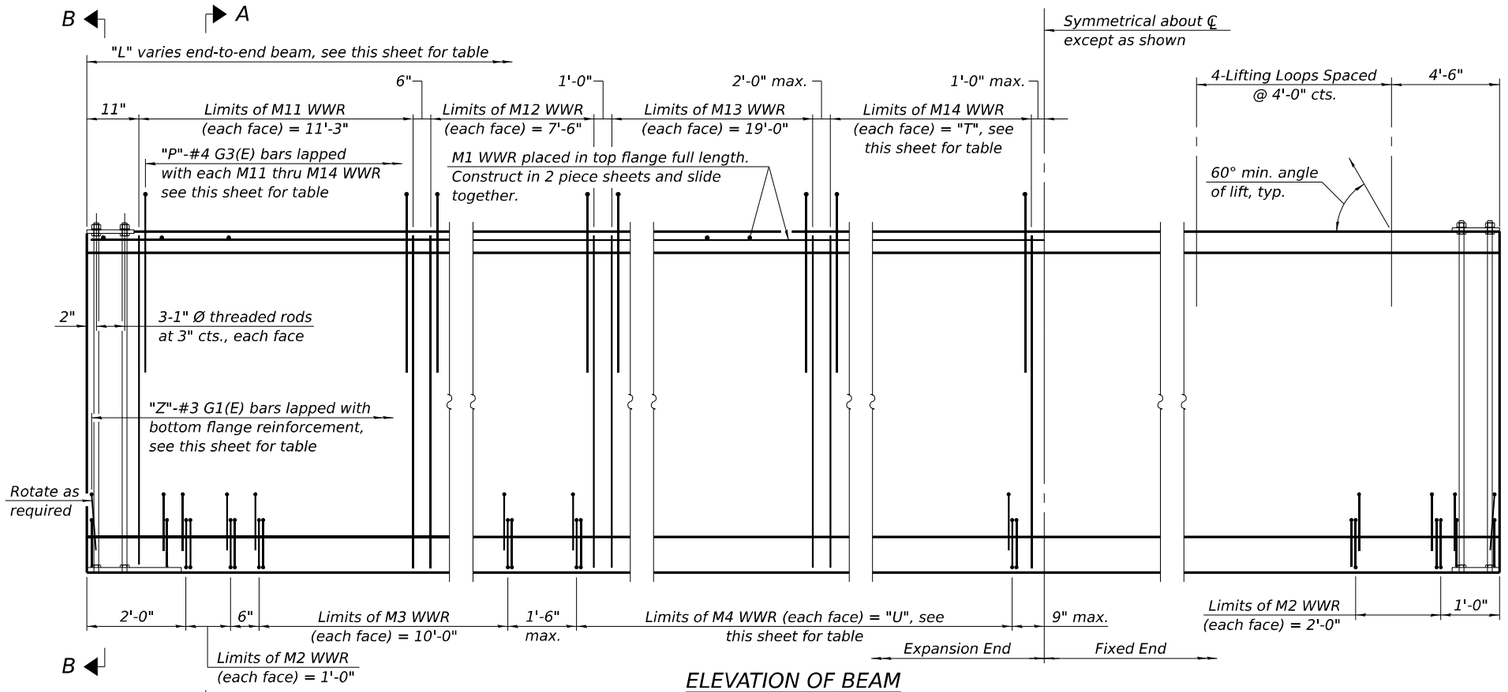

ELEVATION OF BEAM

(Showing reinforcement & dimensions)

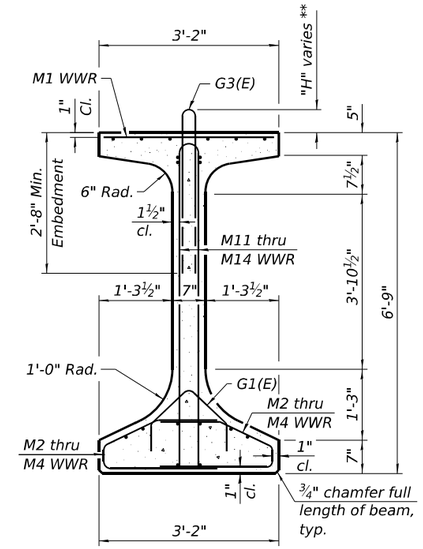

SECTION A-A

** See sheet S-239 for table of "H" dimensions.

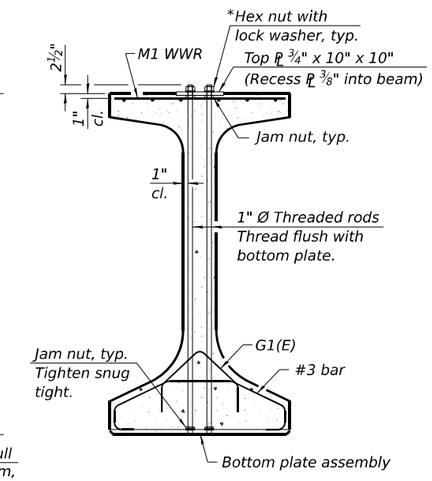

SECTION B-B

* Only tighten sufficiently to compress lock washers

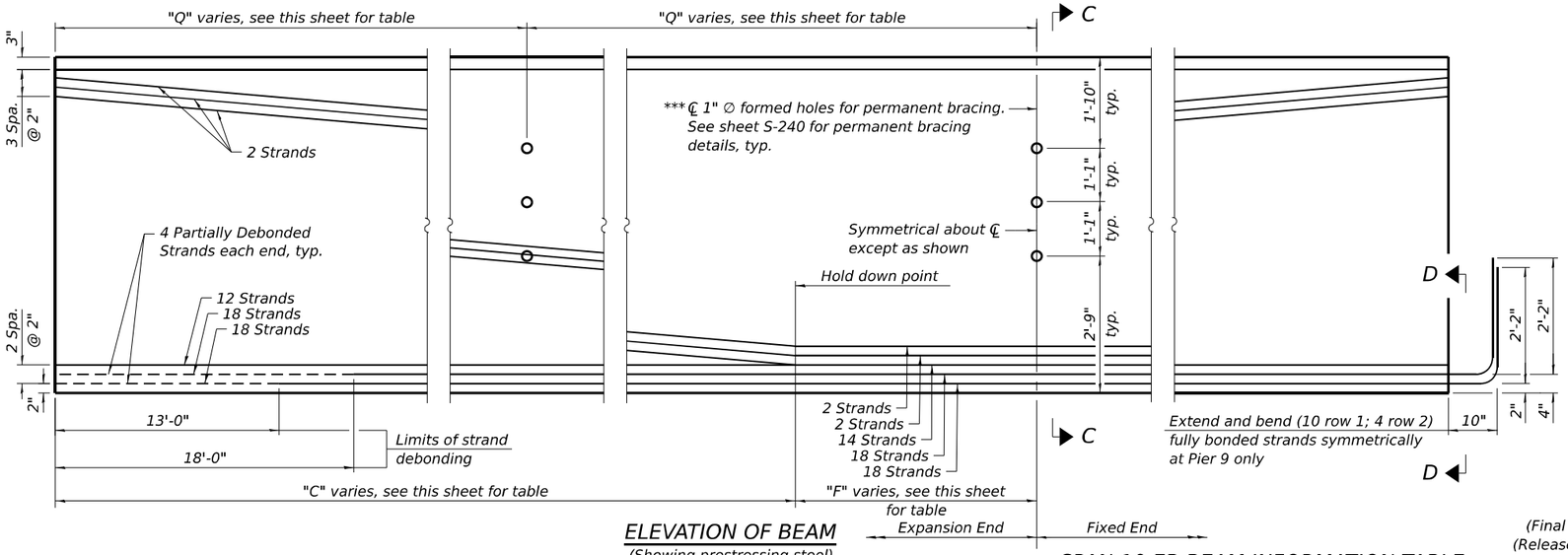

ELEVATION OF BEAM

(Showing prestressing steel)

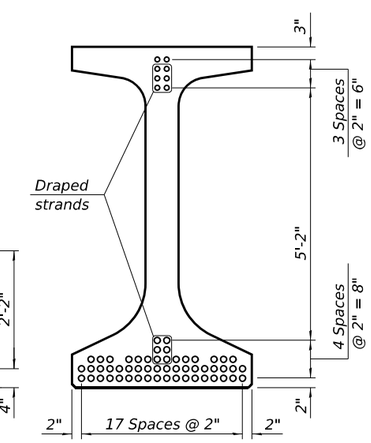

SECTION C-C

(56 - 0.6" Ø 270 ksi strands)
(Final Concrete Compr. Strength, fc = 8,500 psi)
(Release Concrete Compr. Strength, fci = 6,500 psi)

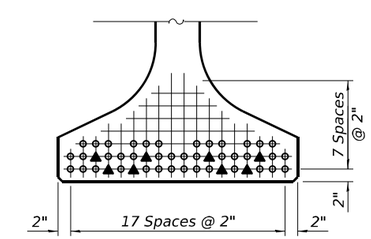

VIEW D-D

○ Fully bonded strand

▲ Partially debonded strand

***Fabricator shall locate to miss strands within permissible tolerances

SPAN 10 EB BEAM INFORMATION TABLE

Beam	E1	E2	E3	E4	E5	E6	E7	E8	E9	E10	E11	E12
L	142'-6¼"	143'-8"	144'-9½"	145'-11½"	147'-1⅝"	148'-3⅞"	149'-6¼"	150'-8⅝"	151'-11¼"	153'-1⅞"	154'-4⅞"	155'-7⅝"
C	57'-0"	57'-6"	58'-0"	58'-6"	59'-0"	59'-6"	60'-0"	60'-6"	61'-0"	61'-6"	62'-0"	62'-6"
F	14'-3⅛"	14'-4"	14'-4¾"	14'-5¾"	14'-6⅞"	14'-8"	14'-9⅛"	14'-10⅜"	14'-11⅝"	15'-1"	15'-2½"	15'-3⅞"
P	196	196	196	196	198	198	198	200	200	200	202	202
Q	35'-7½"	35'-11"	36'-2⅜"	36'-5⅞"	36'-9⅜"	37'-1"	37'-4⅝"	37'-8⅛"	37'-11⅞"	38'-3½"	38'-7¼"	38'-10⅞"
T	30'-0"	30'-0"	30'-0"	30'-0"	32'-0"	32'-0"	32'-0"	34'-0"	34'-0"	34'-0"	36'-0"	36'-0"
U	57'-0"	57'-0"	57'-0"	58'-6"	58'-6"	58'-6"	60'-0"	60'-0"	61'-6"	61'-6"	61'-6"	63'-0"
Z	146	146	146	148	148	148	150	150	152	152	152	154

NOTES:

1. See sheets S-238 and S-239 for additional details and Bill of Material.

WSP USA Inc.
30 N. LASALLE STREET
SUITE 4200
CHICAGO, IL 60602
TEL: (312) 782-8150
FAX: (312) 782-1684

USER NAME = USSJ696614	DESIGNED - SJJ	REVISED -	
	CHECKED - PSK	REVISED -	
PLOT SCALE = 0:2.0000 ':' / in.	DRAWN - SJJ	REVISED -	
PLOT DATE = 11/5/2025	CHECKED - PSK	REVISED -	

STATE OF ILLINOIS
DEPARTMENT OF TRANSPORTATION

IL81 BEAM - UNIT 4 EB - SPAN 10
STRUCTURE NUMBER 099-8309 WB AND 099-8325 EB

SHEET S-234 OF S-333 SHEETS

F.A.I RTE.	SECTION	COUNTY	TOTAL SHEETS	SHEET NO.
I-80	FAI 80 21 STRUCTURE 2	WILL	1230	815
		CONTRACT NO. 62R23		
		ILLINOIS FED. AID PROJECT		

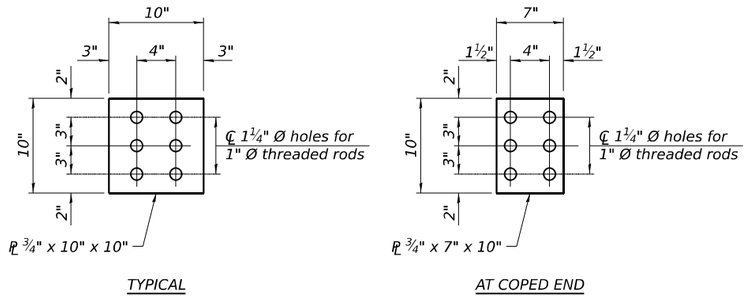

TYPICAL

AT COPED END

PLAN - TOP PLATE

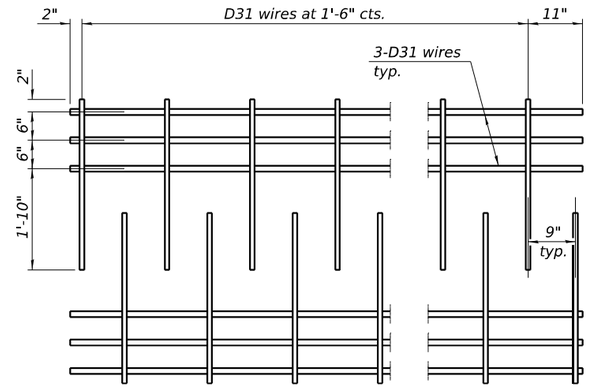

M1 WWR DETAIL

When multiple sheets of M1 WWR are required along the beam length, #5(E) bars (5'-0" long) shall be used to splice the longitudinal D31 wires together (Min. Lap 2'-4").

NOTES

Inserts for ¾" Ø threaded dowel rods, when specified, are to be two strut, ferrule type for interior beams and single ferrule, flared loop type for exterior beams.

Prestressing steel shall be uncoated high strength, low relaxation 7-wire strand, Grade 270. The nominal diameter for beam strands shall be 0.6" and the nominal cross-sectional area shall be 0.217 sq. in. The nominal diameter for lifting loops shall be ½" and the nominal cross sectional area shall be 0.153 sq. in.

The beams shall have a final concrete compressive strength, f'c, of 8500 psi and a release concrete compressive strength, f'ci, of 6500 psi.

A minimum 2½" Ø lifting pin shall be used to engage the lifting loops during handling.

Bend the extended strands inward on the fascia beams to maintain 1½" clearance inside the pier diaphragm.

The top and bottom plates shall be AASHTO M270 Grade 50.

The top plates and bottom plate assemblies shall be galvanized according to AASHTO M111. The threaded rods, nuts and washers shall be galvanized according to AASHTO M232.

Threaded rods shall be ASTM F 1554 Grade 55.

Welded Wire Reinforcement (WWR) shall conform to ASTM A884 with a Class A, Type 1 epoxy coating or ASTM A1060, Table 3 galvanized coating.

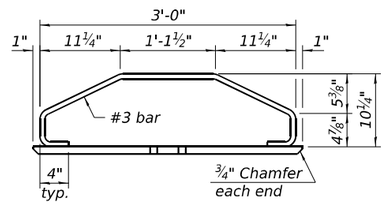

SECTION E-E

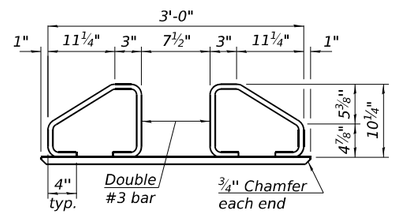

SECTION F-F

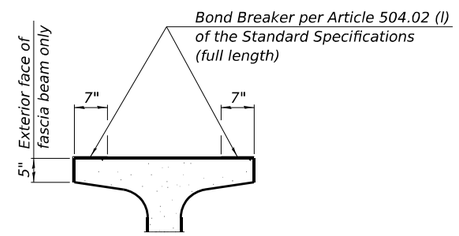

SECTION THRU TOP FLANGE

(Showing limits of bond breaker)

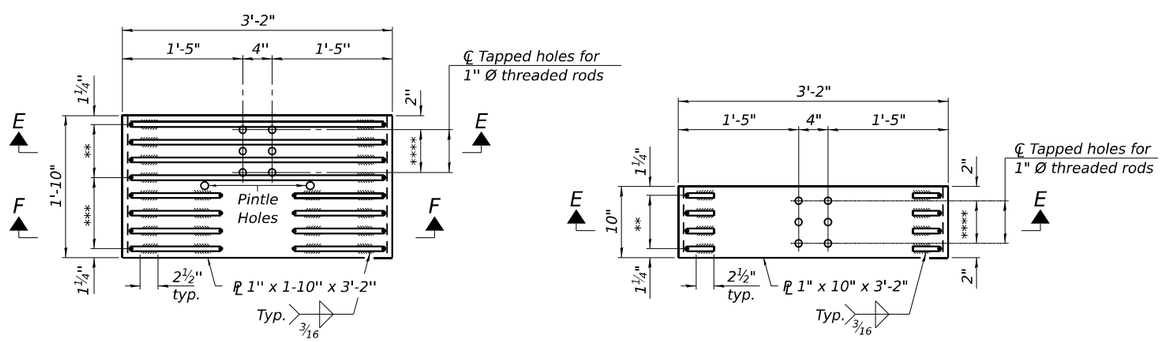

EXPANSION END

FIXED END

PLAN - BOTTOM PLATE ASSEMBLY

** 3 Spaces at 2½" = 7½"
*** 4 Spaces at 3" = 12"
**** 2 Spaces at 3" = 6"

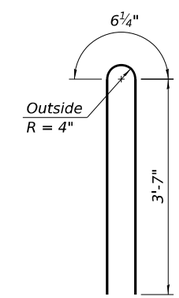

BAR G3(E)

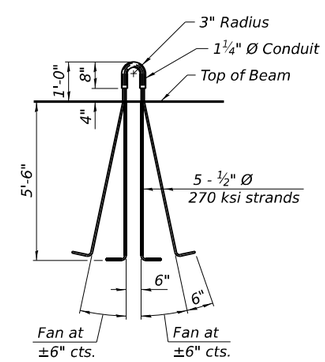

LIFTING LOOP DETAIL

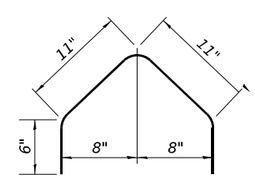

BAR G1(E)

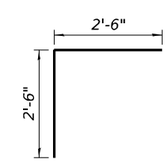

BAR G2(E)

BILL OF MATERIAL - UNIT 3 WB

Item	Unit	Total
Furnishing and Erecting Precast Prestressed Concrete Beams, IL72	Ft.	2,391

BILL OF MATERIAL - UNIT 4 WB

Item	Unit	Total
Furnishing and Erecting Precast Prestressed Concrete Beams, IL72	Ft.	4,560

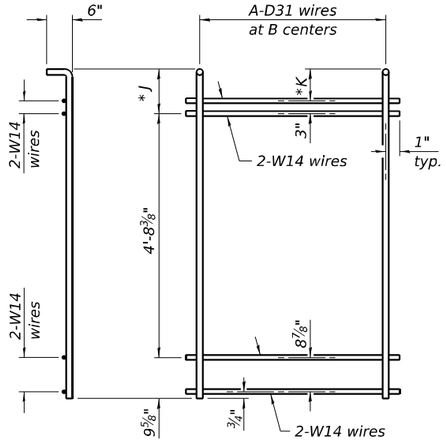

M5 THRU M9 WWR DETAIL - UNIT 3 WB

(See Table of Dimensions)

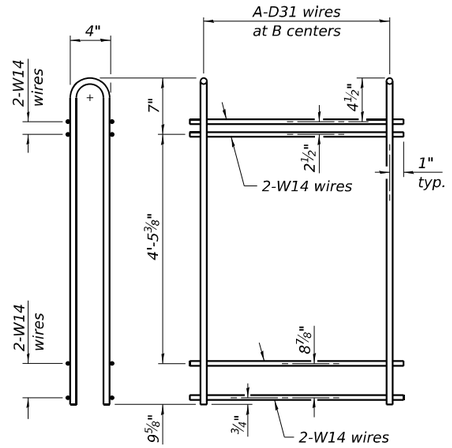

M11 THRU M15 WWR DETAIL - UNIT 4 WB

(See Table of Dimensions)

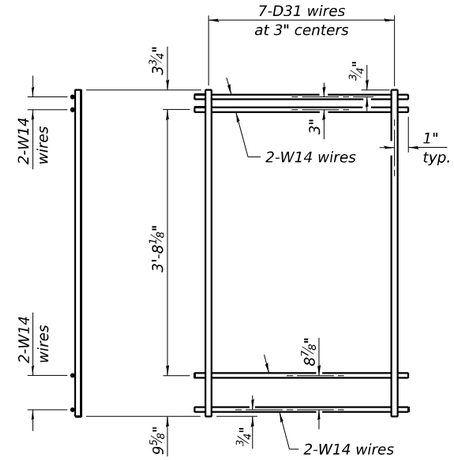

M10 WWR DETAIL - UNITS 3 & 4 WB

UNIT 3 WB - SPANS 6 & 7

WWR	A	B
M2	5	3"
M3	18	6"
M4	42	1'-6"
M5	51	3"
M6	20	6"
M7	21	1'-0"
M8	14	2'-0"
M9	58	3"

UNIT 4 WB - SPAN 8

WWR	A	B
M2	5	3"
M3	18	6"
M4	43	1'-6"
M11	51	3"
M12	20	6"
M13	21	1'-0"
M14	15	2'-0"
M15	58	3"

UNIT 4 WB - SPAN 9

WWR	A	B
M2	5	3"
M3	18	6"
M4	44	1'-6"
M11	58	3"
M12	20	6"
M13	21	1'-0"
M14	16	2'-0"

UNIT 4 WB - SPAN 10

WWR	A	B
M2	5	3"
M3	18	6"
M4	X	1'-6"
M11	58	3"
M12	20	6"
M13	21	1'-0"
M14	Y	2'-0"

(See Additional Details
Table for "X" and "Y")

UNIT 4 WB - SPAN 10 ADDITIONAL DETAILS

BEAM	X	Y
W1	40	13
W2	40	13
W3	40	13
W4	40	13
W5	41	13
W6	41	14
W7	41	14
W8	41	14
W9	41	14
W10	41	14

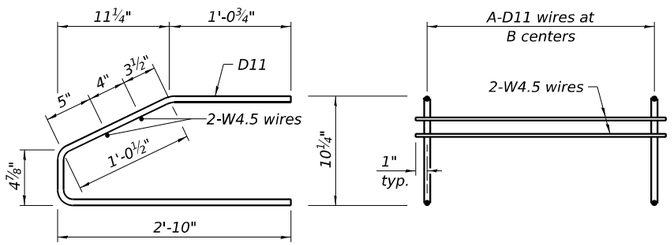

M2 THRU M4 WWR DETAIL - UNITS 3 & 4 WB

(See Table of Dimensions)

* The values of "J" and "K" vary along the length of the beam. See "H" Dimensions Table on this sheet.

TABLE OF DIMENSIONS

(The WWR designs assume grade 60. If necessary, this permits the fabricator to directly substitute grade 60 rebar as detailed in the Manual for Fabrication of Precast Prestressed Concrete Products.)

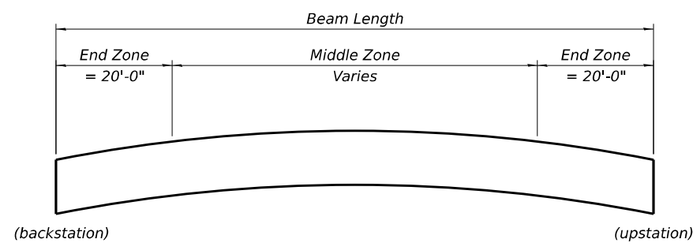

BEAM DIAGRAM FOR G3(E) BAR "H" DIMENSION TABLE

(See Table of Dimensions)

"H" DIMENSION TABLE - UNIT 3 WB

BEAM	SPANS 6 & 7 WB					
	M5, M6 & M9 WWR			M7 & M8 WWR		
	H	J	K	H	J	K
W1	10"	1'-3"	1'-0"	8 1/2"	1'-1 1/2"	10 1/2"
W2 thru W8	7"	1'-0"	9"	5 1/2"	10 1/2"	7 1/2"

For location of "H" dimension, see
Section A-A on sheet S-223

"H" DIMENSIONS TABLE - UNIT 4 WB

BEAM	SPAN 8 WB		SPAN 9 WB		SPAN 10 WB	
	End Zone	Middle Zone	End Zone	Middle Zone	End Zone	Middle Zone
W1	10"	8"	11"	11"	11"	9"
W2	7 1/2"	5 1/2"	8"	8"	8"	6 1/2"
W3	7 1/2"	5 1/2"	8"	8"	8"	6 1/2"
W4	7 1/2"	5 1/2"	8"	8"	7 1/2"	6 1/2"
W5	7 1/2"	5 1/2"	8"	8"	7 1/2"	6 1/2"
W6	7 1/2"	5 1/2"	8"	8"	7 1/2"	6 1/2"
W7	7"	5 1/2"	7"	7"	7"	5 1/2"
W8	7"	5 1/2"	7"	7"	7"	5 1/2"
W9	7"	5 1/2"	7"	6"	7"	5 1/2"
W10	7"	5 1/2"	7"	6"	7"	5 1/2"

For location of "H" dimension, see Section A-A on sheets S-229 thru S-231

NOTES:

1. Welded Wire Reinforcement (WWR) shall conform to ASTM A884 with a Class A, Type 1 epoxy coating or ASTM A1060, Table 3 galvanized coating.

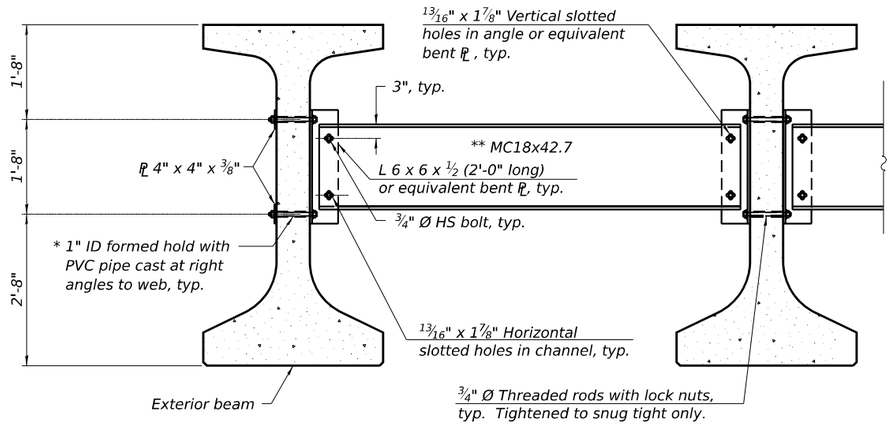

Notes:

All material for bracing shall be hot dip galvanized according to AASHTO M111 unless otherwise noted.

Two hardened washers are required for each set of oversized holes.

All holes shall be 15/16" Ø unless otherwise noted.

5/16" x 3" x 3" plate washers are required over all slotted holes.

All bolts, threaded rods, and hardware shall be galvanized according to AASHTO M232.

Threaded rods shall be ASTM F 1554 Grade 55.

Bracing shall be installed as beams are erected and tightened as soon as possible during erection.

Permanent bracing shall not be paid for separately, but shall be included in the cost of Furnishing and Erecting Precast Prestressed Concrete Beams, IL72.

* Fabricator shall locate to miss strands within permissible tolerances.

** Alternate MC18x45.8 channels are permitted to facilitate material acquisition.

PERMANENT BRACING DETAILS FOR IL72 BEAMS

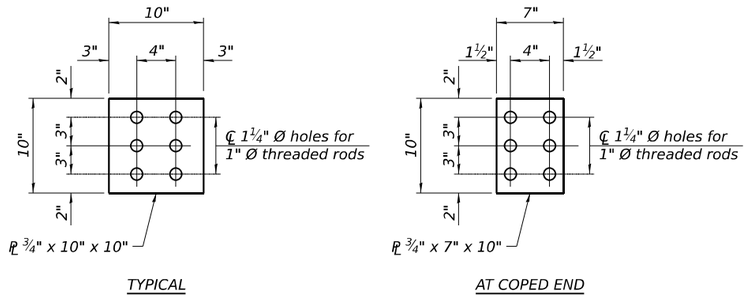

TYPICAL

AT COPED END

PLAN - TOP PLATE

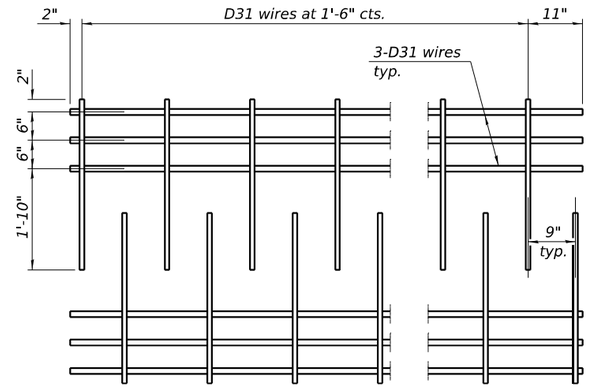

M1 WWR DETAIL

When multiple sheets of M1 WWR are required along the beam length, #5(E) bars (5'-0" long) shall be used to splice the longitudinal D31 wires together (Min. Lap 2'-4").

NOTES

Inserts for ¾" Ø threaded dowel rods, when specified, are to be two strut, ferrule type for interior beams and single ferrule, flared loop type for exterior beams.

Prestressing steel shall be uncoated high strength, low relaxation 7-wire strand, Grade 270. The nominal diameter for beam strands shall be 0.6" and the nominal cross-sectional area shall be 0.217 sq. in. The nominal diameter for lifting loops shall be ½" and the nominal cross sectional area shall be 0.153 sq. in.

The beams shall have a final concrete compressive strength, f'c, of 8500 psi and a release concrete compressive strength, f'ci, of 6500 psi.

A minimum 2½" Ø lifting pin shall be used to engage the lifting loops during handling.

Bend the extended strands inward on the fascia beams to maintain 1½" clearance inside the pier diaphragm.

The top and bottom plates shall be AASHTO M270 Grade 50.

The top plates and bottom plate assemblies shall be galvanized according to AASHTO M111. The threaded rods, nuts and washers shall be galvanized according to AASHTO M232.

Threaded rods shall be ASTM F 1554 Grade 55.

Welded Wire Reinforcement (WWR) shall conform to ASTM A884 with a Class A, Type 1 epoxy coating or ASTM A1060, Table 3 galvanized coating.

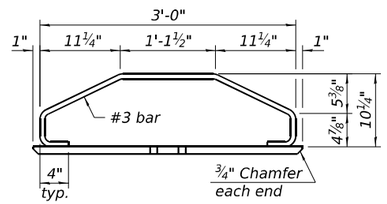

SECTION E-E

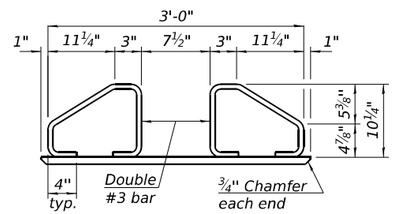

SECTION F-F

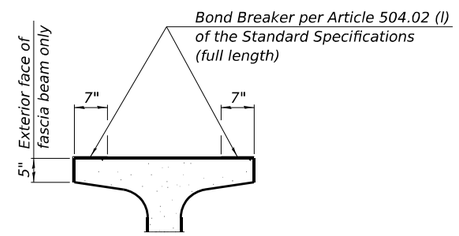

SECTION THRU TOP FLANGE

(Showing limits of bond breaker)

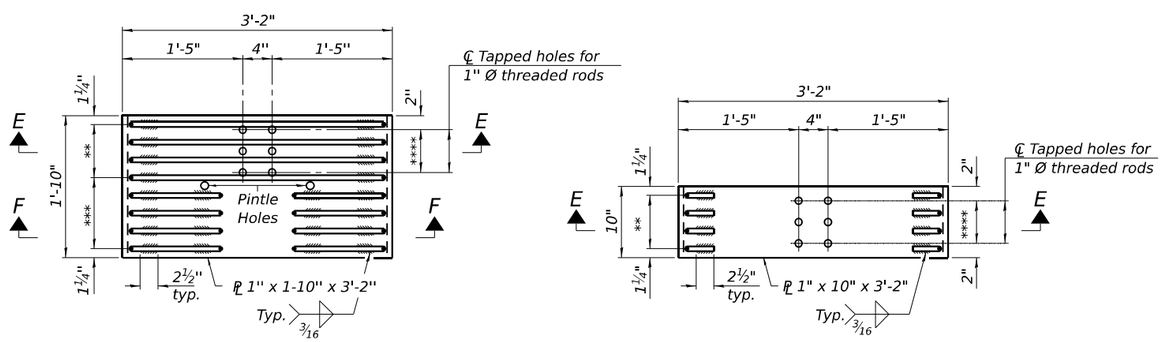

EXPANSION END

FIXED END

PLAN - BOTTOM PLATE ASSEMBLY

** 3 Spaces at 2½" = 7½"
*** 4 Spaces at 3" = 12"
**** 2 Spaces at 3" = 6"

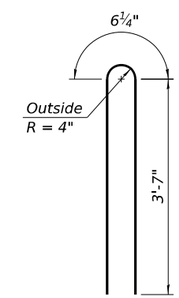

BAR G3(E)

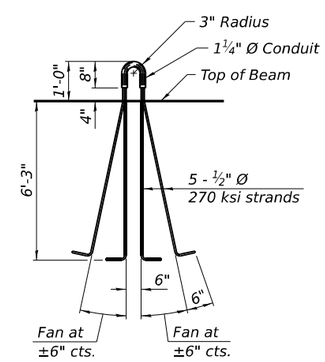

LIFTING LOOP DETAIL

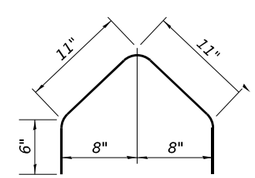

BAR G1(E)

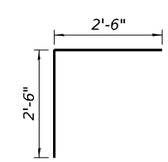

BAR G2(E)

BILL OF MATERIAL - UNIT 3 EB

Item	Unit	Total
Furnishing and Erecting Precast Prestressed Concrete Beams, IL81	Ft.	4,939

BILL OF MATERIAL - UNIT 4 EB

Item	Unit	Total
Furnishing and Erecting Precast Prestressed Concrete Beams, IL81	Ft.	3,640

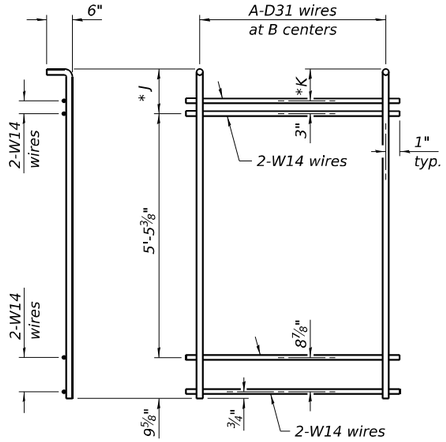

M5 THRU M9 WWR DETAIL - UNIT 3 EB

(See Table of Dimensions)

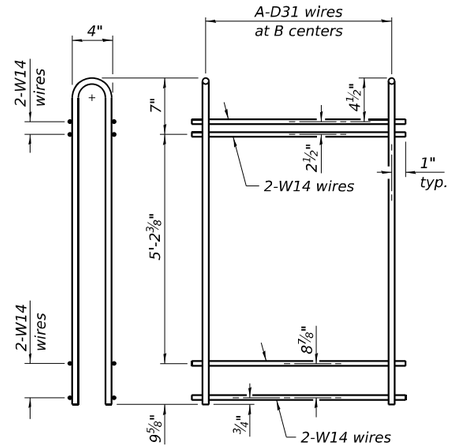

M11 THRU M15 WWR DETAIL - UNIT 4 EB

(See Table of Dimensions)

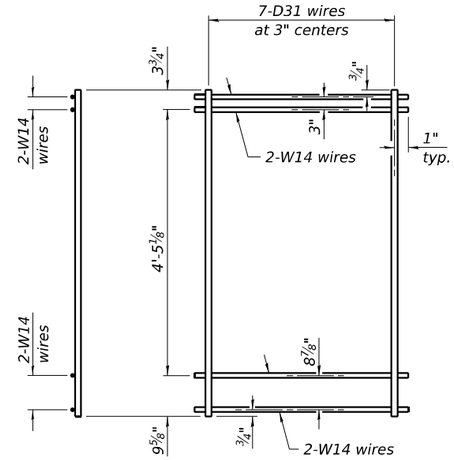

M10 WWR DETAIL - UNITS 3 & 4 EB

* The values of "J" and "K" vary along the length of the beam. See "H" Dimensions Table on this sheet.

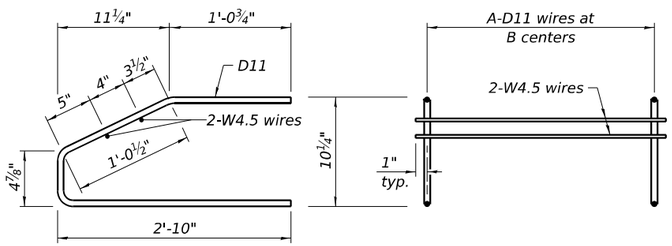

M2 THRU M4 WWR DETAIL - UNITS 3 & 4 EB

(See Table of Dimensions)

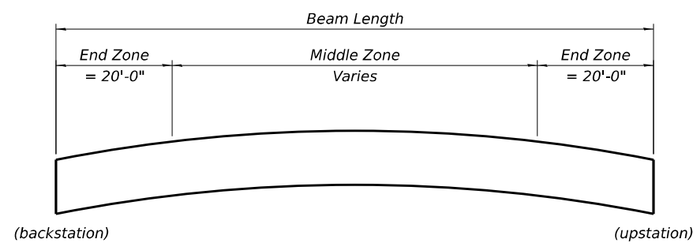

BEAM DIAGRAM FOR G3(E) BAR "H" DIMENSION TABLE

(See Table of Dimensions)

UNIT 3 EB - SPAN 6

WWR	A	B
M2	5	3"
M3	21	6"
M4	45	1'-6"
M5	39	3"
M6	16	6"
M7	20	1'-0"
M8	21	2'-0"
M9	46	3"

UNIT 3 EB - SPAN 7

WWR	A	B
M2	5	3"
M3	21	6"
M4	48	1'-6"
M5	46	3"
M6	16	6"
M7	20	1'-0"
M8	22	2'-0"

UNIT 3 EB - SPAN 8

WWR	A	B
M2	5	3"
M3	21	6"
M4	45	1'-6"
M5	39	3"
M6	16	6"
M7	20	1'-0"
M8	20	2'-0"
M9	46	3"

UNIT 4 EB - SPAN 9

WWR	A	B
M2	5	3"
M3	21	6"
M4	X	1'-6"
M11	39	3"
M12	16	6"
M13	20	1'-0"
M14	Y	2'-0"
M15	46	3"

(See Additional Details Table for "X" and "Y")

UNIT 4 EB - SPAN 10

WWR	A	B
M2	5	3"
M3	21	6"
M4	X	1'-6"
M11	46	3"
M12	16	6"
M13	20	1'-0"
M14	Y	2'-0"

(See Additional Details Table for "X" and "Y")

UNIT 4 EB - SPANS 9 & 10 ADDITIONAL DETAILS

BEAM	SPAN 9 (EB)		SPAN 10 (EB)	
	X	Y	X	Y
E1	40	17	39	16
E2	41	17	39	16
E3	41	18	39	16
E4	42	18	40	16
E5	42	18	40	17
E6	42	18	40	17
E7	43	19	41	17
E8	43	19	41	18
E9	43	19	42	18
E10	44	19	42	18
E11	44	20	42	19
E12	44	20	43	19

TABLE OF DIMENSIONS

(The WWR designs assume grade 60. If necessary, this permits the fabricator to directly substitute grade 60 rebar as detailed in the Manual for Fabrication of Precast Prestressed Concrete Products.)

"H" DIMENSION TABLES - UNIT 3 EB

BEAM	SPAN 6 EB					
	M5, M6 & M9 WWR			M7 & M8 WWR		
	H	J	K	H	J	K
E1 thru E9	6½"	11½"	8½"	5½"	10½"	7½"
E10	9½"	1'-2½"	11½"	8½"	1'-1½"	10½"

BEAM	SPAN 7 EB					
	M5, M6 & M9 WWR			M7 & M8 WWR		
	H	J	K	H	J	K
E1 thru E9	7"	1'-0"	9"	5½"	10½"	7½"
E10	10"	1'-3"	1'-0"	8½"	1'-1½"	10½"

BEAM	SPAN 8 EB					
	M5, M6 & M9 WWR			M7 & M8 WWR		
	H	J	K	H	J	K
E1 thru E9	7"	1'-0"	9"	5½"	10½"	7½"
E10	10"	1'-3"	1'-0"	8½"	1'-1½"	10½"

For location of "H" dimension, see Section A-A on sheets S-225 thru S-227

"H" DIMENSIONS TABLE FOR G3 (E) BAR - UNIT 4 EB

BEAM	SPAN 9 EB			SPAN 10 EB		
	End Zone Pier 8 EB	Middle Zone	End Zone Pier 9 EB	End Zone Pier 9 EB	Middle Zone	End Zone E. Abut. EB
E1	7"	6½"	8½"	8½"	6½"	8½"
E2	7"	6½"	8½"	8½"	6½"	8½"
E3	7"	6"	8½"	7½"	6½"	8½"
E4	7"	5½"	7½"	7½"	6½"	7½"
E5	7"	5½"	7½"	7½"	5½"	7½"
E6	7"	5½"	7½"	7½"	5½"	7½"
E7	7"	5½"	7"	7"	5½"	6½"
E8	7"	5½"	7"	7"	5½"	6½"
E9	7"	5½"	7"	7"	5½"	6½"
E10	7"	5½"	7"	7"	5½"	6½"
E11	7"	5½"	7"	7"	5½"	6½"
E12	9"	8"	9"	9"	8"	9"

For location of "H" dimension, see Section A-A on sheets S-234 and S-235

NOTES:

1. Welded Wire Reinforcement (WWR) shall conform to ASTM A884 with a Class A, Type 1 epoxy coating or ASTM A1060, Table 3 galvanized coating.

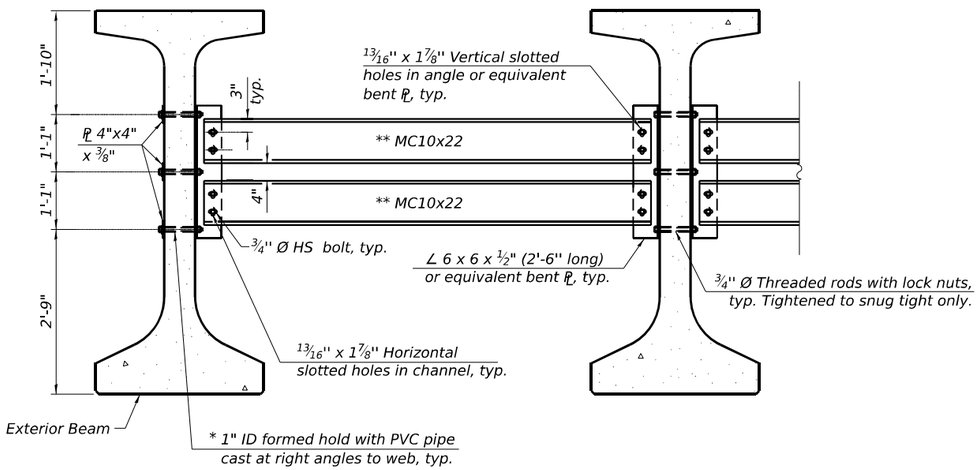

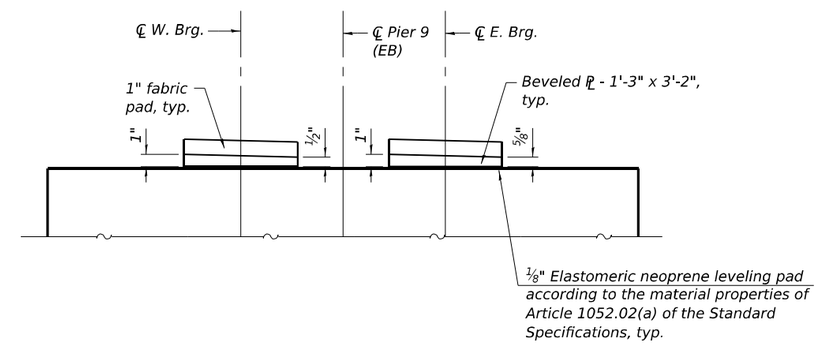

Notes:
All material for bracing shall be hot dip galvanized according to AASHTO M111 unless otherwise noted.
Two hardened washers are required for each set of oversized holes.
All holes shall be 15/16" Ø unless otherwise noted.
5/16" x 3" x 3" plate washers are required over all slotted holes.
All bolts, threaded rods, and hardware shall be galvanized according to AASHTO M232.
Threaded rods shall be ASTM F 1554 Grade 55.
Bracing shall be installed as beams are erected and tightened as soon as possible during erection.
Permanent bracing shall not be paid for separately, but shall be included in the cost of Furnishing and Erecting Precast Prestressed Concrete Beams, IL81.

PERMANENT BRACING DETAILS FOR IL81 BEAMS

* Fabricator shall locate to miss strands within permissible tolerances.

** Alternate MC18x45.8 channels are permitted to facilitate material acquisition.

Notes:
All material for beveled plate shall be hot dip galvanized according to AASHTO M111 unless otherwise noted.
Permanent bracing shall not be paid for separately, but shall be included in the cost of Furnishing and Erecting Precast Prestressed Concrete Beams, IL81.

BEVELED STEEL BEARING PLATE AT PIER 9

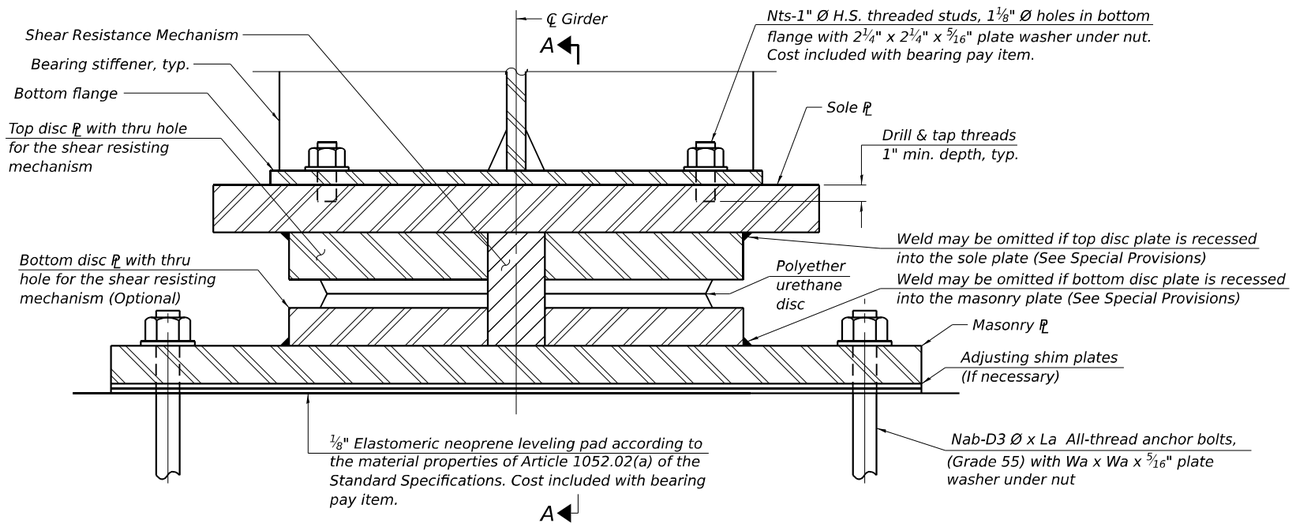

SECTION THRU BEARING

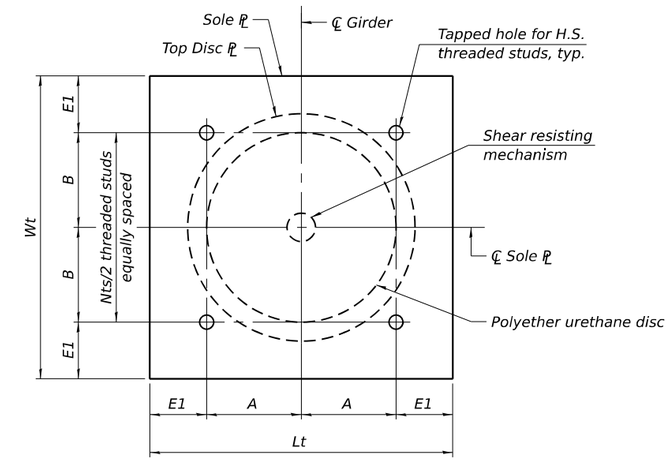

SOLE PLATE AND TOP DISC PLATE PLAN

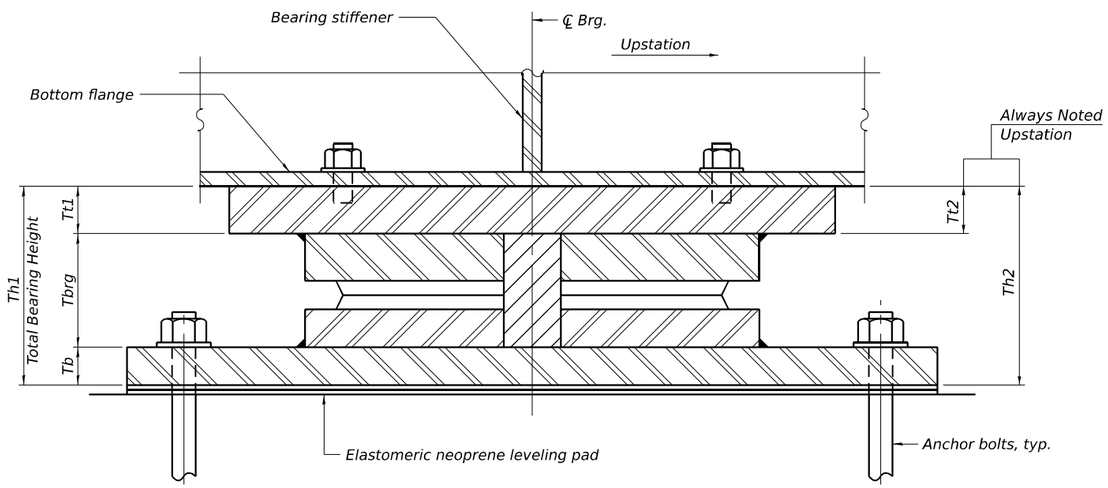

SECTION A-A

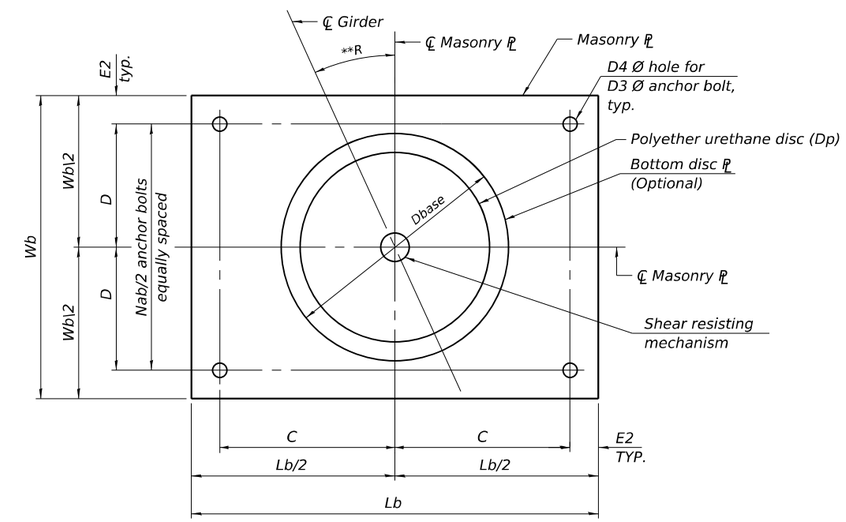

MASONRY PLATE AND BOTTOM DISC PLATE PLAN

**R = 0° for Pier 4, see table on this sheet for angles at other locations

MASONRY PLATE ROTATION - PIER 1 ONLY

Westbound		Eastbound	
Location	Rotation Angle R	Location	Rotation Angle R
Girder W1	20° 26' 34"	Girder E1	23° 30' 00"
Girder W2	20° 48' 57"	Girder E2	23° 30' 00"
Girder W3	21° 10' 47"	Girder E3	23° 30' 00"
Girder W4	21° 32' 06"	Girder E4	23° 30' 00"
Girder W5	21° 52' 55"	Girder E5	23° 30' 00"
Girder W6	22° 13' 15"	Girder E6	23° 30' 00"
Girder W7	22° 33' 06"	Girder E7	23° 30' 00"
Girder W8	22° 52' 31"	Girder E8	23° 30' 00"
Girder W9	23° 11' 28"		
Girder W10	23° 30' 00"		

NOTES:

1. Two ⅛ in. adjusting shims shall be provided for each bearing in addition to all other plates or shims and placed as shown on bearing details. Shim plates not included in total bearing height. Cost included with bearing pay item.
2. Total bearing height is estimated based on manufacturer data. Actual bearing height may differ from contract plans. The Contractor shall be responsible for verifying bearing heights and adjusting seat elevations, if required, prior to placing pier or abutment concrete.
3. See sheet S-244 for Fixed Bearing Dimensions Table and Design Data.

BILL OF MATERIAL

	Item	Unit	Total
*	Erecting High Load Multi-Rotational Bearings, Disc, Fixed- 900K	Each	18
*	Erecting High Load Multi-Rotational Bearings, Disc, Fixed- 1500K	Each	16
	Anchor Bolts, 1 1/2"	Each	168

* The value specified in the pay item name is an approximate vertical load capacity that is used for letting and bidding purposes only. Exact bearing capacity will vary subject to final design.

WSP USA Inc.
30 N. LASALLE STREET
SUITE 4200
CHICAGO, IL 60602
TEL: (312) 782-8150
FAX: (312) 782-1684

USER NAME = USSJ696614	DESIGNED - TB	REVISED -	
	CHECKED - PJL	REVISED -	
PLOT SCALE = 0.167 ' / in.	DRAWN - GM	REVISED -	
PLOT DATE = 11/5/2025	CHECKED - PJL	REVISED -	

STATE OF ILLINOIS
DEPARTMENT OF TRANSPORTATION

FIXED HLMR DISC BEARING DETAILS
STRUCTURE NUMBER 099-8309 WB AND 099-8325 EB

SHEET S-241 OF S-333 SHEETS

F.A.I RTE.	SECTION	COUNTY	TOTAL SHEETS	SHEET NO.
I-80	FAI 80 21 STRUCTURE 2	WILL	1230	822
		CONTRACT NO. 62R23		
	ILLINOIS	FED. AID PROJECT		

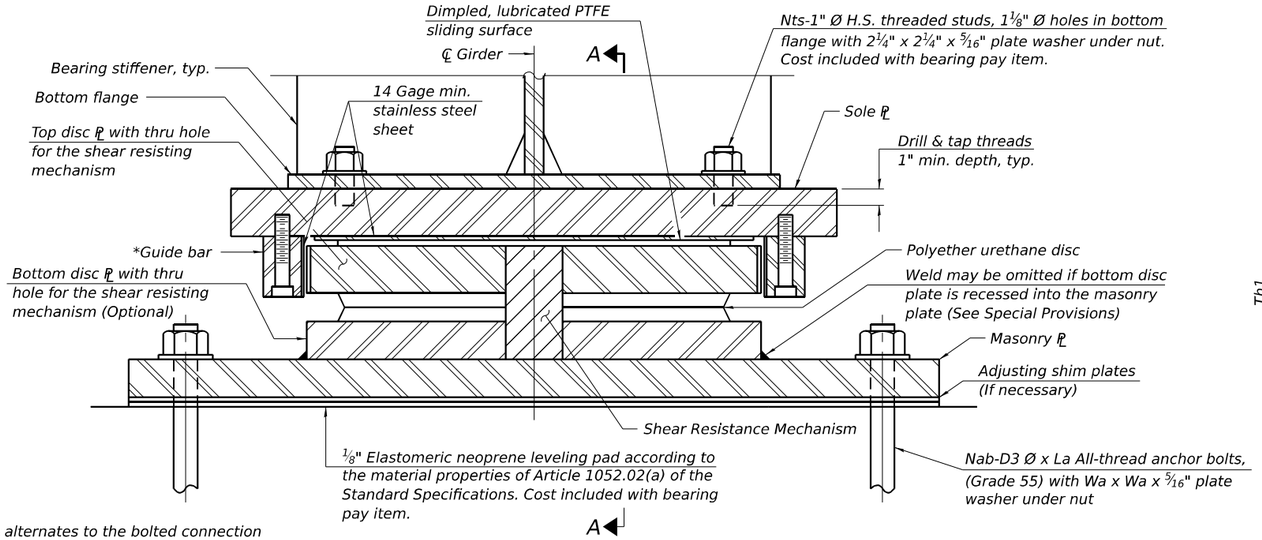

*As alternates to the bolted connection shown, the guide bars may be connected to the sole plate by groove welds or the guide bars and sole plate may be fabricated as a single piece.

SECTION THRU BEARING

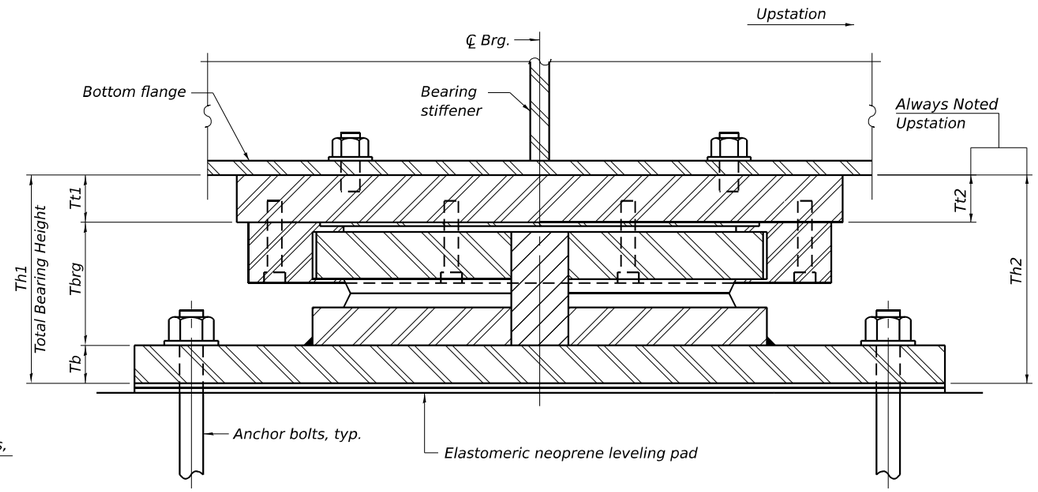

SECTION A-A

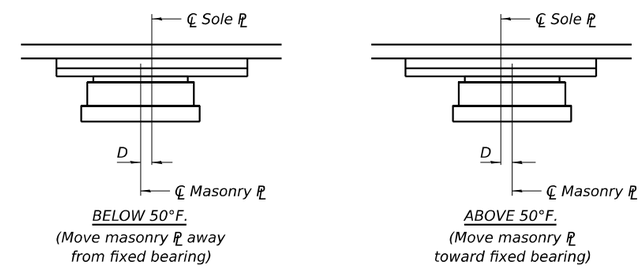

BELOW 50°F.
(Move masonry PL away from fixed bearing)

ABOVE 50°F.
(Move masonry PL toward fixed bearing)

SETTING ANCHOR BOLTS AT EXPANSION BEARING

D=⅛'' per each 100' of expansion for every 15° temp. change from the normal temp. of 50° F.

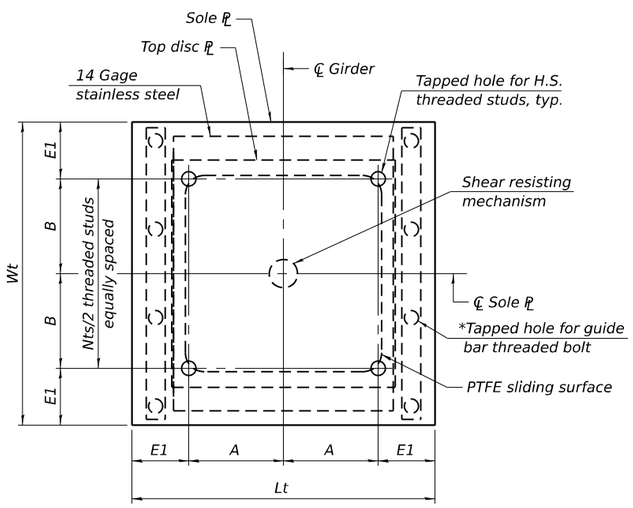

SOLE PLATE AND TOP DISC PLATE PLAN

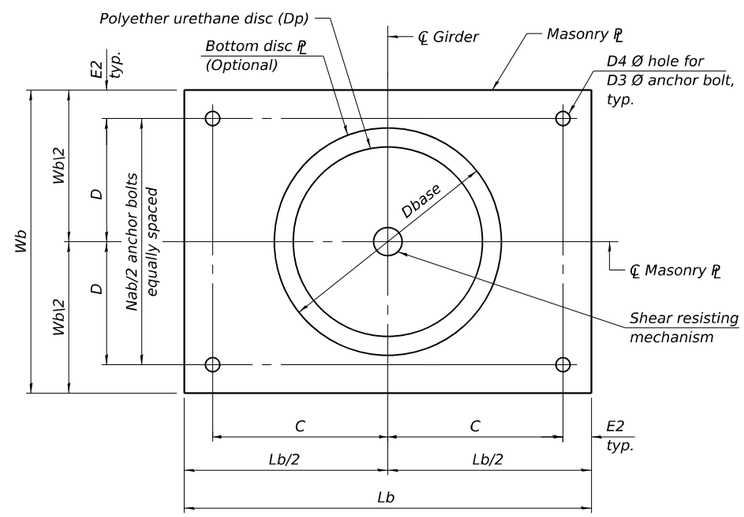

MASONRY PLATE AND BOTTOM DISC PLATE PLAN

BILL OF MATERIAL

	Item	Unit	Total
**	Erecting High Load Multi-Rotational Bearings, Disc, Guided Expansion-300K	Each	34
**	Erecting High Load Multi-Rotational Bearings, Disc, Guided Expansion-500K	Each	32
**	Erecting High Load Multi-Rotational Bearings, Disc, Guided Expansion-1500K	Each	16
	Anchor Bolts, 1"	Each	264
	Anchor Bolts, 1 1/2"	Each	96

** The value specified in the pay item name is an approximate vertical load capacity that is used for letting and bidding purposes only. Exact bearing capacity will vary subject to final design.

NOTES:

1. Two ⅛ in. adjusting shims shall be provided for each bearing in addition to all other plates or shims and placed as shown on bearing details. Shim plates not included in total bearing height. Cost included with bearing pay item.
2. Total bearing height is estimated based on manufacturer data. Actual bearing height may differ from contract plans. The Contractor shall be responsible for verifying bearing heights and adjusting seat elevations, if required, prior to placing pier or abutment concrete.
3. See sheet S-244 for Guided Expansion Bearing Dimensions Table and Design Data.

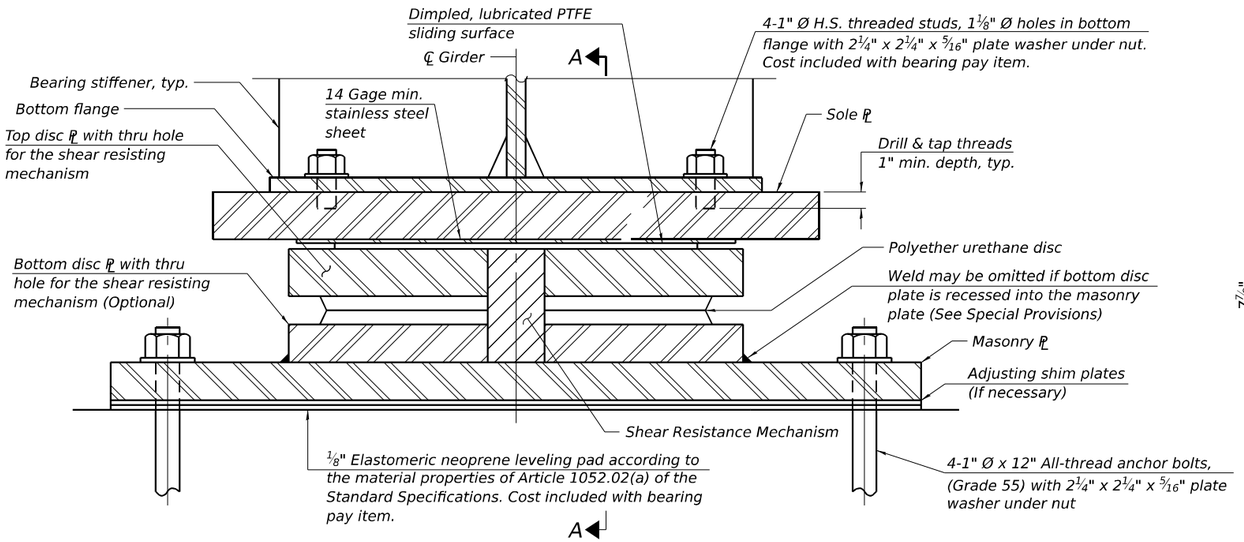

SECTION THRU BEARING

(Girder W1 & W10 at W. Abut. WB)

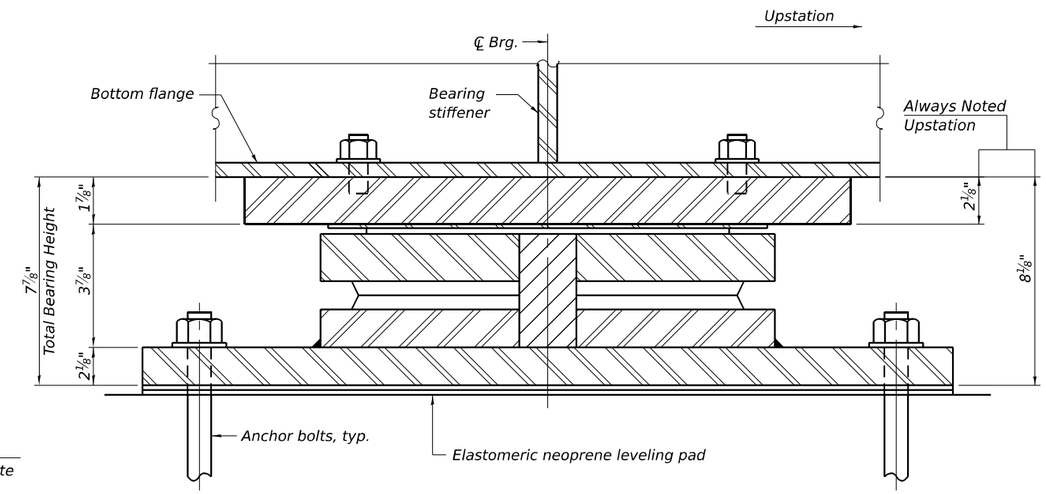

SECTION A-A

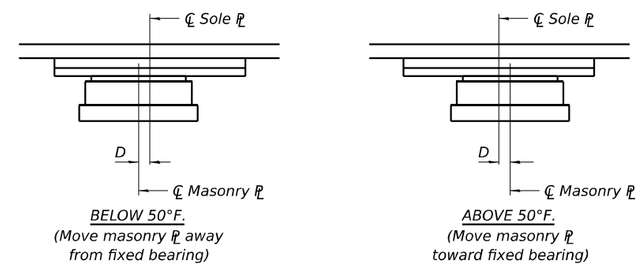

BELOW 50°F.
(Move masonry PL away from fixed bearing)

ABOVE 50°F.
(Move masonry PL toward fixed bearing)

SETTING ANCHOR BOLTS AT EXPANSION BEARING

D=⅛" per each 100' of expansion for every 15° temp. change from the normal temp. of 50° F.

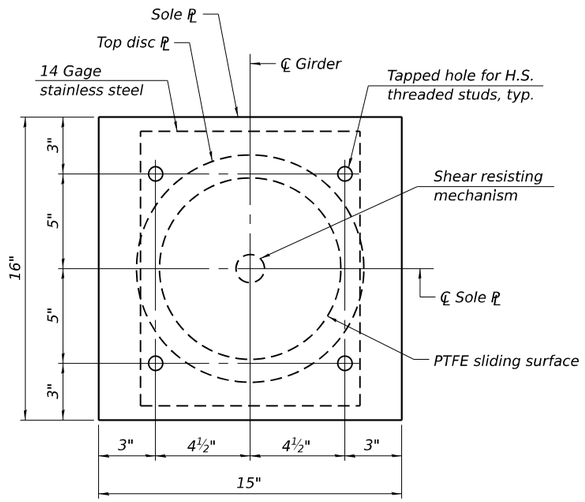

SOLE PLATE AND TOP DISC PLATE PLAN

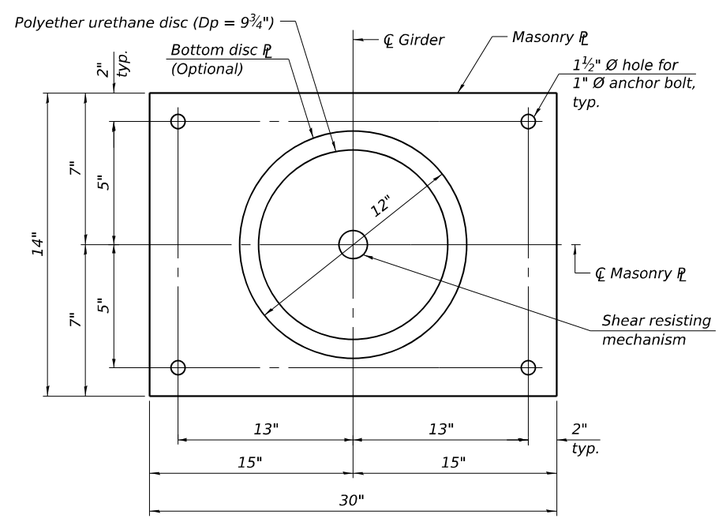

MASONRY PLATE AND BOTTOM DISC PLATE PLAN

BILL OF MATERIAL

	Item	Unit	Total
*	Erecting High Load Multi-Rotational Bearings, Disc, Non-Guided Expansion-300k	Each	2
	Anchor Bolts, 1 Inch	Each	8

* The value specified in the pay item name is an approximate vertical load capacity that is used for letting and bidding purposes only. Exact bearing capacity will vary subject to final design.

NOTES:

1. Two ⅛ in. adjusting shims shall be provided for each bearing in addition to all other plates or shims and placed as shown on bearing details. Shim plates not included in total bearing height. Cost included with bearing pay item.
2. Total bearing height is estimated based on manufacturer data. Actual bearing height may differ from contract plans. The Contractor shall be responsible for verifying bearing heights and adjusting seat elevations, if required, prior to placing pier or abutment concrete.
3. See sheet S-244 for Design Data.

HLMR-D-NGE 5/15/2023

DESIGN DATA - FIXED

	Unit	Pier 1 WB	Pier 1 EB	Pier 4
Unfactored Vertical Dead Load Reaction (RDC)	kips	385	424	862
Unfactored Vertical Wearing Surface Reaction (RDW)	kips	97	109	163
Unfactored Vertical Live Load without Impact Reaction (RLL)	kips	243	263	286
Maximum Strength or Extreme Event Lateral Reaction (Hu)	kips	96	107	205
Maximum Strength Limit State Rotation (Θu according to Article 14.4.2.2)	rad	0.0159	0.0127	0.0151
Service I Factored Lateral Reaction	kips	14	14	120
Service I Rotation	rad	0.0089	0.0058	0.0065
Service I Factored Vertical Reaction	kips	724	796	1312
Strength I Factored Vertical Reaction	kips	1104	1212	1915

DESIGN DATA - GUIDED EXPANSION

	Unit	W. Abut. WB Girders W2-W9	W. Abut. EB	W. Brg. Pier 2 WB	W. Brg. Pier 2 EB	E. Brg. Pier 2 WB	E. Brg. Pier 2 EB	Pier 3	Pier 5 WB	Pier 5 EB
Unfactored Vertical Dead Load Reaction (RDC)	kips	103	102	100	116	202	200	862	200	200
Unfactored Vertical Wearing Surface Reaction (RDW)	kips	29	28	26	32	46	45	163	45	45
Unfactored Vertical Live Load without Impact Reaction (RLL)	kips	118	119	103	122	145	127	286	127	127
Maximum Strength or Extreme Event Lateral Reaction (Hu)	kips	26	26	25	30	50	49	205	49	49
Maximum Strength Limit State Rotation (Θu according to Article 14.4.2.2)	rad	0.0130	0.0136	0.0201	0.0219	0.0155	0.0155	0.0161	0.0155	0.0155
Unfactored Design Thermal Movement from 50° F (ΔT)	in.	2.00	2.13	4.13	3.75	7.88	7.88	4.63	6.50	7.38
Service I Factored Lateral Reaction	kips	2	2	2	2	6	6	12	6	6
Service I Rotation	rad	0.0049	0.0052	0.0116	0.0131	0.0062	0.0062	0.0074	0.0062	0.0062
Strength I Factored Longitudinal Movement	in.	2.38	2.50	5.00	4.50	9.38	9.38	5.50	7.75	8.88
Service I Factored Vertical Reaction	kips	251	249	228	270	393	371	1312	371	371
Strength I Factored Vertical Reaction	kips	399	397	360	427	603	565	1915	565	565

DESIGN DATA - NON-GUIDED EXPANSION

	Unit	W. Abut. WB Girders W1 & W10
Unfactored Vertical Dead Load Reaction (RDC)	kips	98
Unfactored Vertical Wearing Surface Reaction (RDW)	kips	29
Unfactored Vertical Live Load without Impact Reaction (RLL)	kips	119
Maximum Strength or Extreme Event Lateral Reaction (Hu)	kips	25
Maximum Strength Limit State Rotation (Θu according to Article 14.4.2.2)	rad	0.0133
Unfactored Design Thermal Movement from 50° F (ΔT)	in.	2.00
Transverse Movement	in.	0.29
Service I Factored Lateral Reaction	kips	2
Service I Rotation	rad	0.0050
Strength I Factored Longitudinal Movement	in.	2.38
Service I Factored Vertical Reaction	kips	245
Strength I Factored Vertical Reaction	kips	392

FIXED BEARING DIMENSIONS TABLE

Location	Quantity	Bearing Dimensions						Sole Plate							Masonry Plate						Anchor Bolts						Threaded Studs
		Size	Dp (IN)	Dbase (IN)	Tbrg (IN)	Th1 (IN)	Th2 (IN)	Lt (IN)	Wt (IN)	Tt1 (IN)	Tt2 (IN)	E1 (IN)	A (IN)	B (IN)	Lb (IN)	Wb (IN)	Tb (IN)	E2 (IN)	C (IN)	D (IN)	Grade	Nab	D3 (IN)	D4 (IN)	La (IN)	Wa (IN)	Nts
Pier 1 WB	10	900K	16 3/4	18 1/4	5	11 3/4	12	21 1/4	22 1/4	3 1/8	3 3/8	3	7 5/8	8 1/8	45 1/4	20 1/4	3 5/8	2	20 5/8	8 1/8	F1554 Gr. 55	4	1 1/2	2	18	3	6
Pier 1 EB	8	900K	16 3/4	18 1/4	5	12 1/8	12 1/2	21 1/4	22 1/4	3 1/4	3 5/8	3	7 5/8	8 1/8	45 1/4	20 1/4	3 7/8	2	20 5/8	8 1/8	F1554 Gr. 55	4	1 1/2	2	18	3	6
Pier 4 WB & EB	16	1500K	21 1/2	24 1/2	6 7/16	13 11/16	13 3/16	27 1/2	28 1/2	4 5/8	4 1/8	3	10 3/4	11 1/4	40	26 1/2	2 5/8	2	18	11 1/4	F1554 Gr. 55	6	1 1/2	2	18	3	10

GUIDED EXPANSION BEARING DIMENSIONS TABLE

Location	Quantity	Bearing Dimensions						Sole Plate							Masonry Plate						Anchor Bolts						Threaded Studs
		Size	Dp (IN)	Dbase (IN)	Tbrg (IN)	Th1 (IN)	Th2 (IN)	Lt (IN)	Wt (IN)	Tt1 (IN)	Tt2 (IN)	E1 (IN)	A (IN)	B (IN)	Lb (IN)	Wb (IN)	Tb (IN)	E2 (IN)	C (IN)	D (IN)	Grade	Nab	D3 (IN)	D4 (IN)	La (IN)	Wa (IN)	Nts
W. Abut. WB Girders W2-W9	8	300K	9 3/4	10 3/4	3 7/8	8	8 1/4	16 3/8	17 3/8	1 5/8	1 7/8	3	5 3/16	5 11/16	30	12 3/4	2 1/2	2	13	4 3/8	F1554 Gr. 55	4	1	1 1/2	12	2 1/4	4
W. Abut. EB	8	300K	9 3/4	10 3/4	3 7/8	8	8 3/8	16 3/8	17 3/8	1 5/8	2	3	5 3/16	5 11/16	30	12 3/4	2 1/2	2	13	4 3/8	F1554 Gr. 55	4	1	1 1/2	12	2 1/4	4
W. Brg. Pier 2 WB	10	300K	9 3/4	10 3/4	3 7/8	7 7/8	8	16 3/8	17 3/8	1 5/8	1 3/4	3	5 3/16	5 11/16	30	12 3/4	2 3/8	2	13	4 3/8	F1554 Gr. 55	4	1	1 1/2	12	2 1/4	4
W. Brg. Pier 2 EB	8	300K	9 3/4	10 3/4	3 7/8	8 3/8	8 1/2	16 3/8	17 3/8	1 3/4	1 7/8	3	5 3/16	5 11/16	32	12 3/4	2 3/4	2	14	4 3/8	F1554 Gr. 55	4	1	1 1/2	12	2 1/4	4
E. Brg. Pier 2 WB	8	500K	12 1/2	13 1/2	4 7/8	9 7/8	10	19 1/8	20 1/8	2 1/8	2 1/4	3	6 9/16	7 1/16	36	15 1/2	2 7/8	2	16	5 3/4	F1554 Gr. 55	4	1	1 1/2	12	2 1/4	4
E. Brg. Pier 2 EB	8	500K	12 1/2	13 1/2	4 7/8	9 3/4	9 7/8	19 1/8	20 1/8	2	2 1/8	3	6 9/16	7 1/16	36	15 1/2	2 7/8	2	16	5 3/4	F1554 Gr. 55	4	1	1 1/2	12	2 1/4	4
Pier 3 WB & EB	16	1500K	21 1/2	24 1/2	6 9/16	13 1/16	13 1/16	30 1/8	31 1/8	3 7/8	3 7/8	3	12 1/16	12 9/16	40	26 1/2	2 5/8	2	18	11 1/4	F1554 Gr. 55	6	1 1/2	2	18	3	10
W. Brg. Pier 5 WB	8	500K	12 1/2	13 1/2	4 7/8	10 1/4	9 3/4	19 1/8	20 1/8	2 1/2	2	3	6 9/16	7 1/16	36	15 1/2	2 7/8	2	16	5 3/4	F1554 Gr. 55	4	1	1 1/2	12	2 1/4	4
W. Brg. Pier 5 EB	8	500K	12 1/2	13 1/2	4 7/8	10 1/4	9 3/4	19 1/8	20 1/8	2 1/2	2	3	6 9/16	7 1/16	36	15 1/2	2 7/8	2	16	5 3/4	F1554 Gr. 55	4	1	1 1/2	12	2 1/4	4

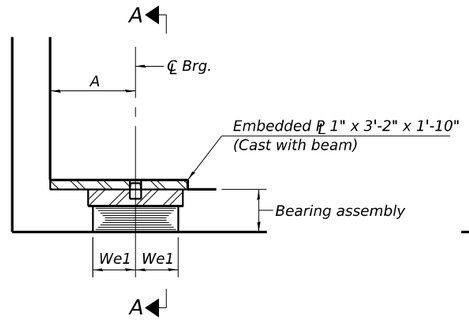

ELEVATION AT UNIT BREAK

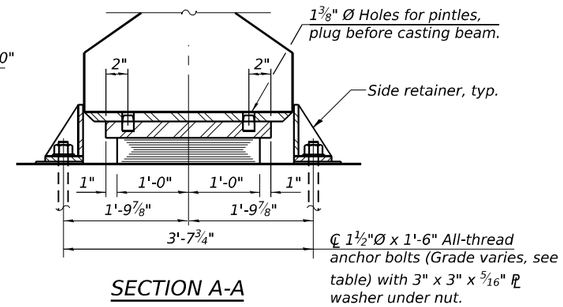

SECTION A-A

TYPE I ELASTOMERIC EXP. BRG.

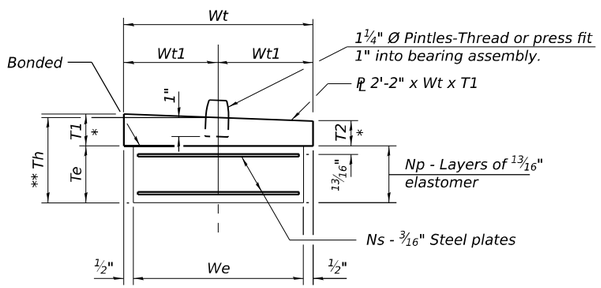

BEARING ASSEMBLY

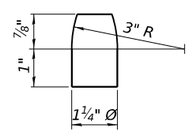

PINTLE

* T2 always oriented upstation from T1
** Measured at ℄ Brg.

TYPE I ELASTOMERIC BEARING DIMENSIONS TABLE

	Bearing Location	No. Req'd	Th	Elastomer					Top Plate					Side Retainer		Anchor Bolts
				We	We1	Te	Np	Ns	A	Wt	Wt1	T1	T2	W	Hr	Grade
	WB - Unit 3 - Pier 5	8	9 7/16"	1'-8"	10"	6 13/16"	7	6	10½"	1'-9"	10½"	2⅞"	2⅜"	1'-9"	12"	F1554 Gr. 55
	WB - Unit 3 - Pier 7	8	9⅝"	1'-8"	10"	6 13/16"	7	6	10½"	1'-9"	10½"	3¼"	2⅜"	1'-9"	12"	F1554 Gr. 55
	WB - Unit 4 - Pier 7	10	8⅛"	1'-6"	9"	5 7/16"	6	5	9½"	1'-7"	9½"	3"	2⅜"	1'-7"	10½"	F1554 Gr. 55
	WB - Unit 4 - E. Abut.	10	8 5/16"	1'-6"	9"	5 7/16"	6	5	9½"	1'-7"	9½"	3¼"	2½"	1'-7"	10½"	F1554 Gr. 55
	EB - Unit 3 - Pier 5	10	9½"	1'-8"	10"	6 13/16"	7	6	10½"	1'-9"	10½"	3"	2⅜"	1'-9"	12"	F1554 Gr. 105
	EB - Unit 3 - Pier 8	10	9 9/16"	1'-8"	10"	6 13/16"	7	6	10½"	1'-9"	10½"	3⅛"	2⅜"	1'-9"	12"	F1554 Gr. 105
	EB - Unit 4 - Pier 8	12	7 7/16"	1'-8"	10"	4 13/16"	5	4	10½"	1'-9"	10½"	2⅞"	2⅜"	1'-9"	10"	F1554 Gr. 55
***	EB - Unit 4 - E. Abut.	8	7 9/16"	1'-8"	10"	4 13/16"	5	4	10½"	1'-9"	10½"	2⅞"	2⅜"	1'-9"	10"	F1554 Gr. 55

*** Type I elastomeric bearings are only used for Beams E3-E10. For details of bearings for Beams E1, E2, E11, and E12 see sheet S-246.

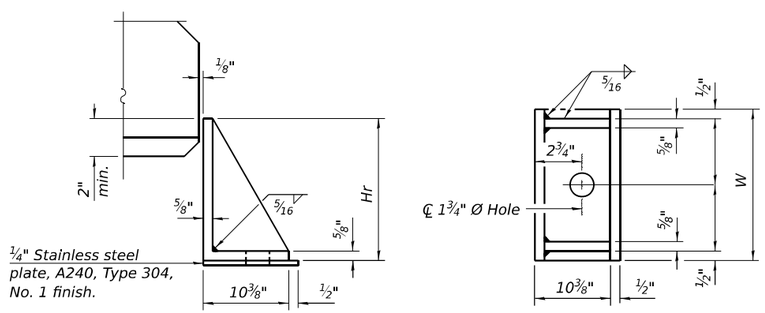

SIDE RETAINER

Equivalent rolled angle with stiffeners will be allowed in lieu of welded plates.

NOTES:

1. Side retainers and stainless steel plates shall be included in the cost of Elastomeric Bearing Assembly, Type I.
2. See sheets S-235 and S-238 for additional details of embedded plate.
3. Anchor bolts and side retainers at all supports shall be installed as each member is erected unless an equivalent temporary means of lateral restraint is used.
4. All (embedded and separate) bearings plates, side retainers, anchor bolts, nuts, washers and pintles shall be galvanized according to AASHTO M111 or M232 as applicable.

BILL OF MATERIAL - WB

Item	Unit	Total
Elastomeric Bearing Assembly, Type I	Each	36
Anchor Bolts, 1½"	Each	72

BILL OF MATERIAL - EB

Item	Unit	Total
Elastomeric Bearing Assembly, Type I	Each	40
Anchor Bolts, 1½"	Each	80

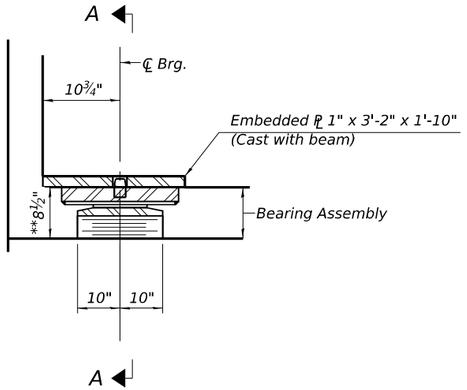

ELEVATION AT UNIT BREAK

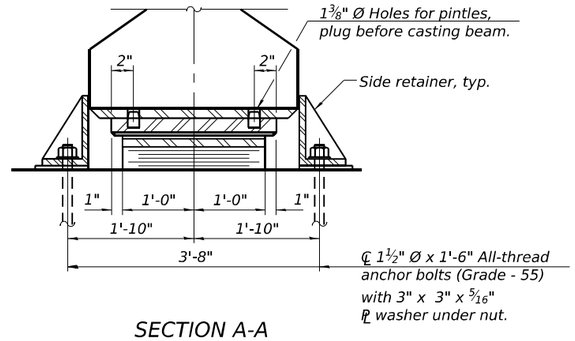

SECTION A-A

TYPE II ELASTOMERIC EXP. BRG.

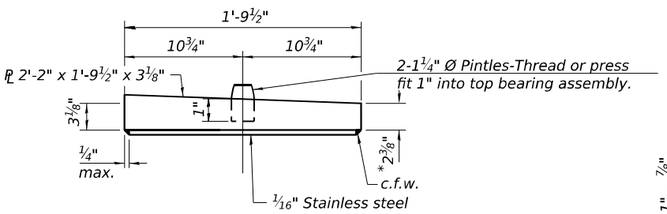

TOP BEARING ASSEMBLY

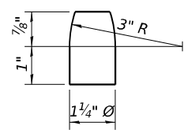

PINTLE

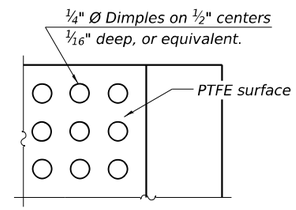

PLAN-PTFE SURFACE

* This end oriented upstation
** Measured at ℄ of Brg.
*** ⅛" PTFE dimpled, unlubricated.

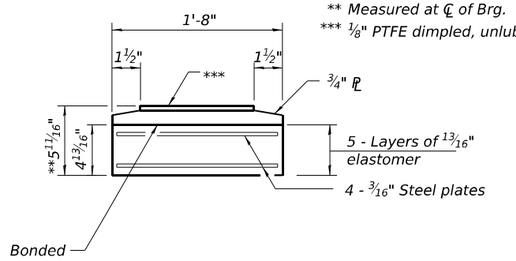

BOTTOM BEARING ASSEMBLY

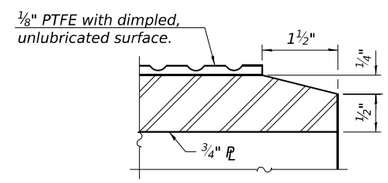

SECTION THRU PTFE

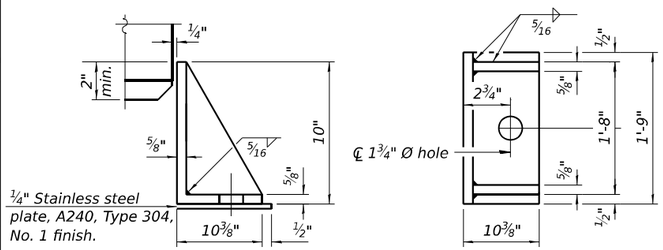

SIDE RETAINER

Equivalent rolled angle with stiffeners will be allowed in lieu of welded plates.

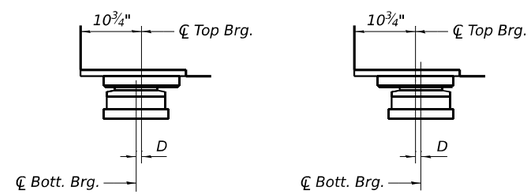

BELOW 50°F. ABOVE 50°F.

D=⅛" per each 100' of expansion for every 15° temp. change from the normal temp. of 50°F. The neutral point may be assumed at Pier 9 for Unit 4 EB.

EXPANSION BEARING ORIENTATION

The above diagrams are for informational purposes only to show the amount of expected offset "D" for the current temperature in the field.

NOTES:

1. Type II Elastomeric Bearing Assembly only applies to E1, E2, E11, and E12 for Unit 4 EB East Abutment.
2. Side retainers and stainless steel plates shall be included in the cost of Elastomeric Bearing Assembly, Type II.
3. The ⅛" PTFE sheet shall be bonded directly to the top steel plate with a two-component, medium viscosity epoxy resin, conforming to the requirements of the Federal Specification MMM-A-134, Type I. The bond agent shall be applied on the full area of the contact surfaces.
4. Bonding of ⅛" PTFE sheet during vulcanizing process will be permitted provided the process and method of adjusting assembly height is approved by the Engineer.
5. See sheet S-238 for additional details of embedded plate.
6. Anchor bolts and side retainers at all supports shall be installed as each member is erected unless an equivalent temporary means of lateral restraint is used.
7. All (embedded and separate) bearings plates, side retainers, anchor bolts, nuts, washers and pintles shall be galvanized according to AASHTO M111 or M232 as applicable.

BILL OF MATERIAL

Item	Unit	Total
Elastomeric Bearing Assembly, Type II	Each	4
Anchor Bolts, 1½"	Each	8

NOTES:

1. For Elevations and Sections, see Sheet S-251.
2. For Drainage Penetration details, see Sheet S-251.
3. For Section B-B, see Sheet S-253.
4. For additional notes, and Bill of Material, see Sheet S-255.
5. Concrete Sealer shall be applied to exposed surfaces of abutment backwall, seats, and front face above grade.

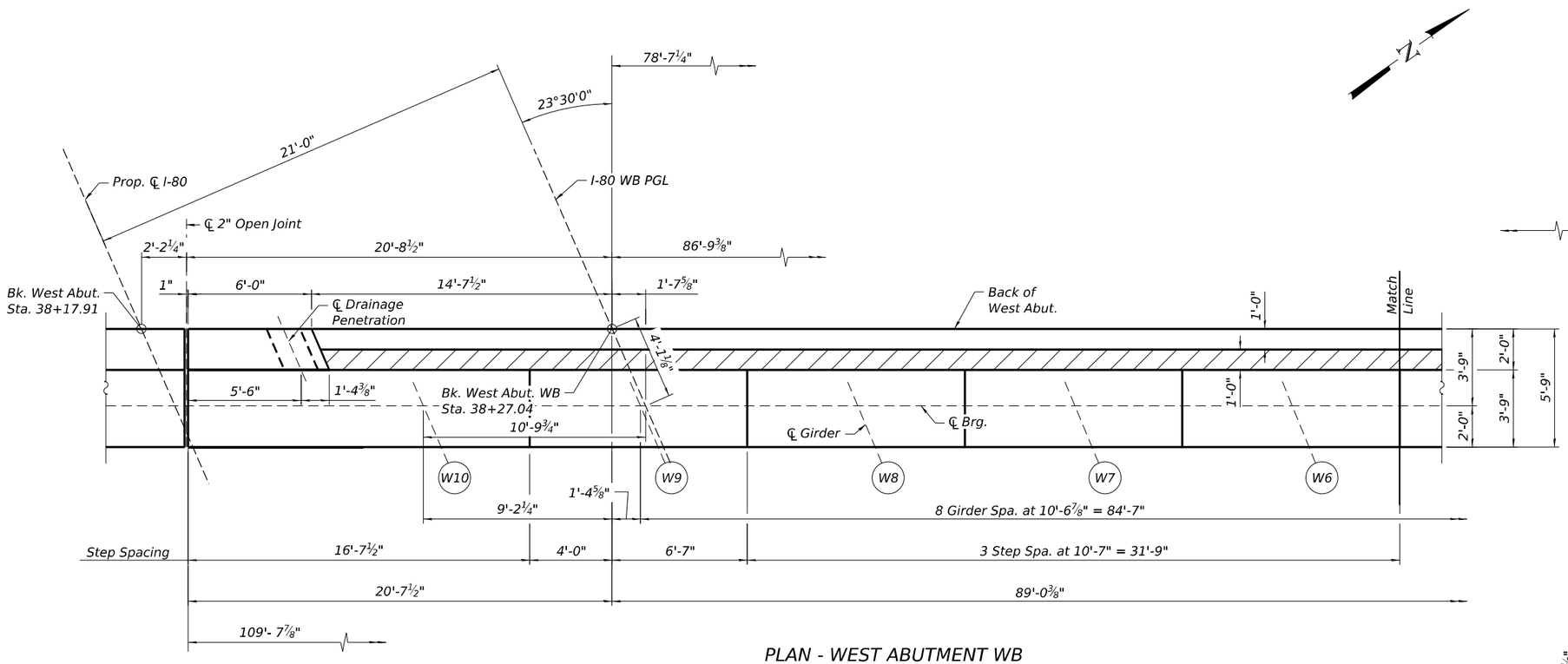

PLAN - WEST ABUTMENT WB

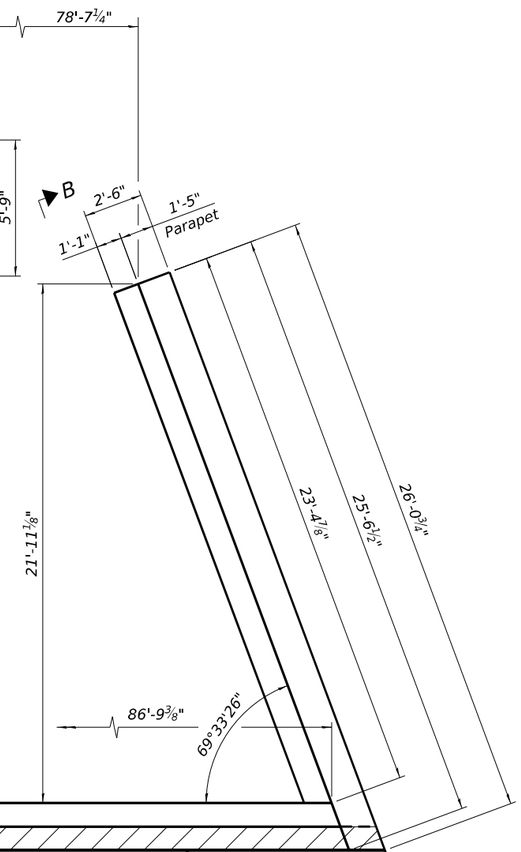

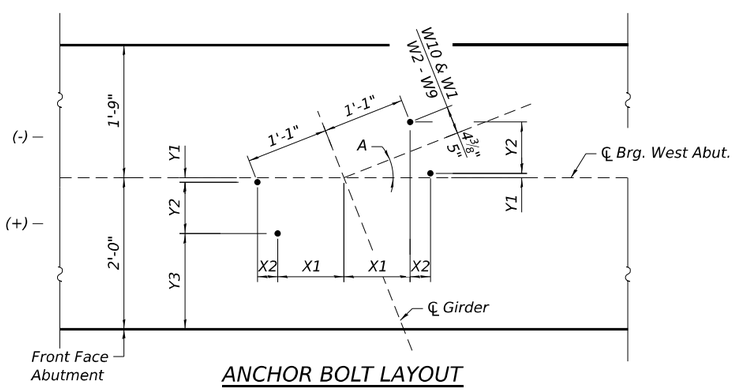

ANCHOR BOLT LAYOUT

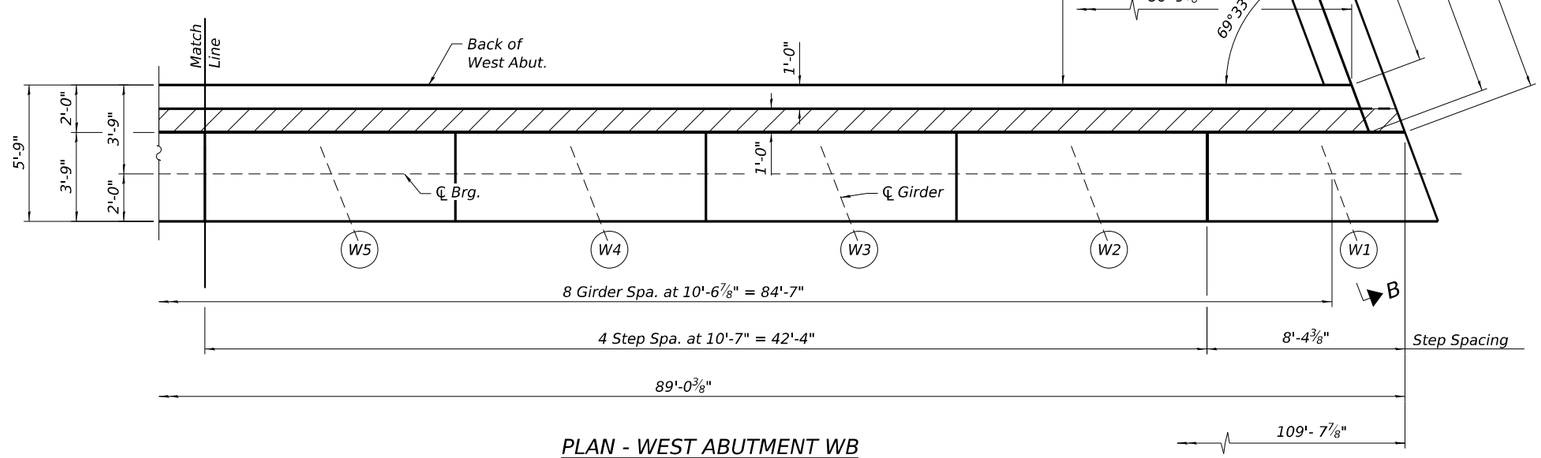

PLAN - WEST ABUTMENT WB

ANCHOR BOLT DIMENSIONS

Girder	angle "A"	X1	X2	Y1	Y2	Y3
W10	23°30'0"	9 15/16"	4"	5/8"	9 3/16"	1'-2 3/16"
W9	23°11'28"	10¼"	3 7/16"	1⅛"	8 1/16"	1'-2 13/16"
W8	23°11'28"	10¼"	3⅜"	1"	8 1/16"	1'-2 15/16"
W7	22°52'31"	10 5/16"	3⅜"	15/16"	8 1/16"	1'-3"
W6	22°33'06"	10⅜"	3 5/16"	⅞"	8⅛"	1'-3"
W5	21°13'15"	10 7/16"	3¼"	13/16"	8⅛"	1'-3 1/16"
W4	21°52'55"	10½"	3 3/16"	11/16"	8⅛"	1'-3 3/16"
W3	21°32'06"	10 9/16"	3 3/16"	⅝"	8 3/16"	1'-3 3/16"
W2	20°48'57"	10⅝"	3⅛"	½"	8 3/16"	1'-3 5/16"
W1	20°26'34"	10 7/16"	3½"	-⅛"	9¼"	1'-2¾"

WSP USA Inc.
30 N. LASALLE STREET
SUITE 4200
CHICAGO, IL 60602
TEL: (312) 782-8150
FAX: (312) 782-1684

USER NAME = USSJ696614	DESIGNED - KA	REVISED -	
	CHECKED - LAS	REVISED -	
PLOT SCALE = 8:0 ':" / in.	DRAWN - KA	REVISED -	
PLOT DATE = 11/5/2025	CHECKED - LAS	REVISED -	

STATE OF ILLINOIS
DEPARTMENT OF TRANSPORTATION

WEST ABUTMENT PLAN WB
STRUCTURE NUMBER 099-8309 WB AND 099-8325 EB

SHEET S-247 OF S-333 SHEETS

F.A.I RTE.	SECTION	COUNTY	TOTAL SHEETS	SHEET NO.
I-80	FAI 80 21 STRUCTURE 2	WILL	1230	828
		CONTRACT NO. 62R23		
		ILLINOIS	FED. AID PROJECT	

MODEL: Default
FILE NAME: pw://transystems-pw.bentley.com:transyscorp-pw1-hosted/Documents/Projects_2018/CH401/401180022/03-WSP/CAD/62R23-RB-1/Sheets/Structural/0998309-62R23-S750-ABW01.dgn

NOTES:

1. For Elevations and Sections, see Sheet S-252.
2. For Drainage Penetration details, see Sheet S-252.
3. For Section A-A, see Sheet S-254.
4. For additional notes, and Bill of Material, see Sheet S-255.
5. Concrete Sealer shall be applied to exposed surfaces of abutment backwall, seats, and front face above grade.

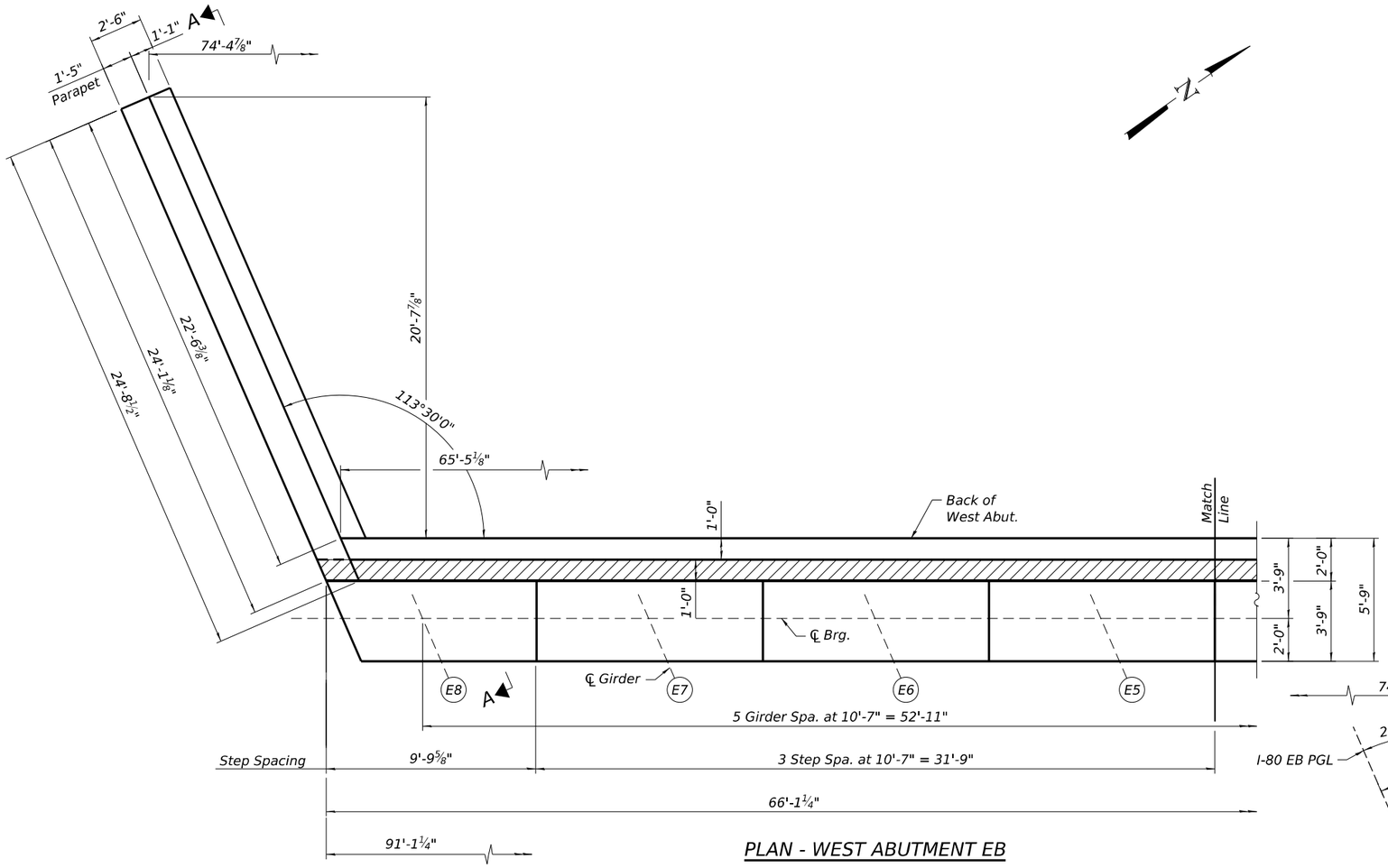

PLAN - WEST ABUTMENT EB

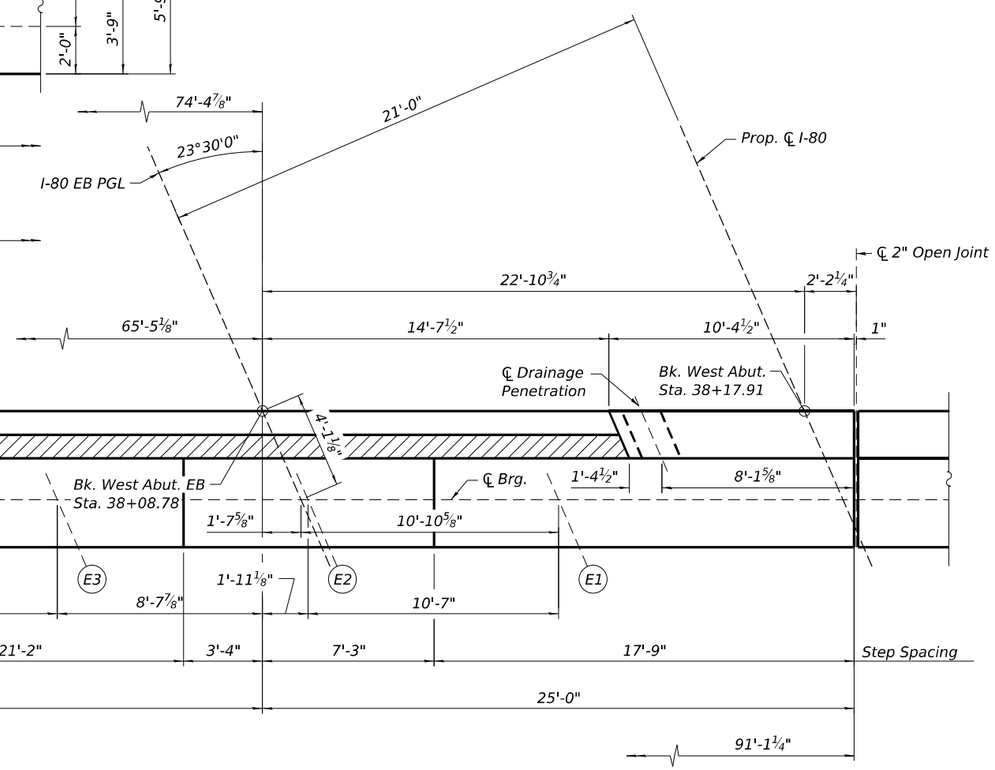

PLAN - WEST ABUTMENT EB

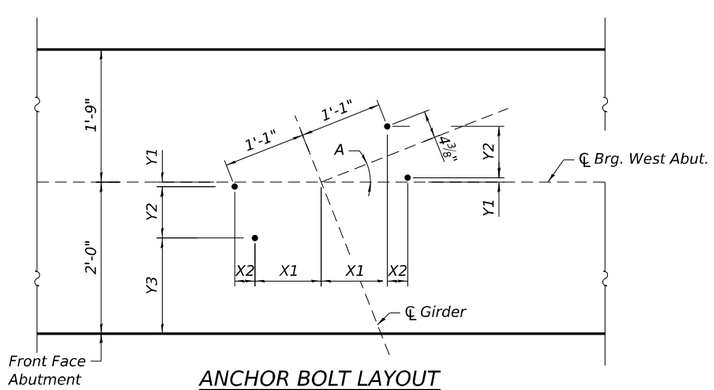

ANCHOR BOLT LAYOUT

ANCHOR BOLT DIMENSIONS

Girder	angle "A"	X1	X2	Y1	Y2	Y3
E8 - E1	23°30'0"	10 3/16"	3½"	1 3/16"	8"	1'-2 13/16"

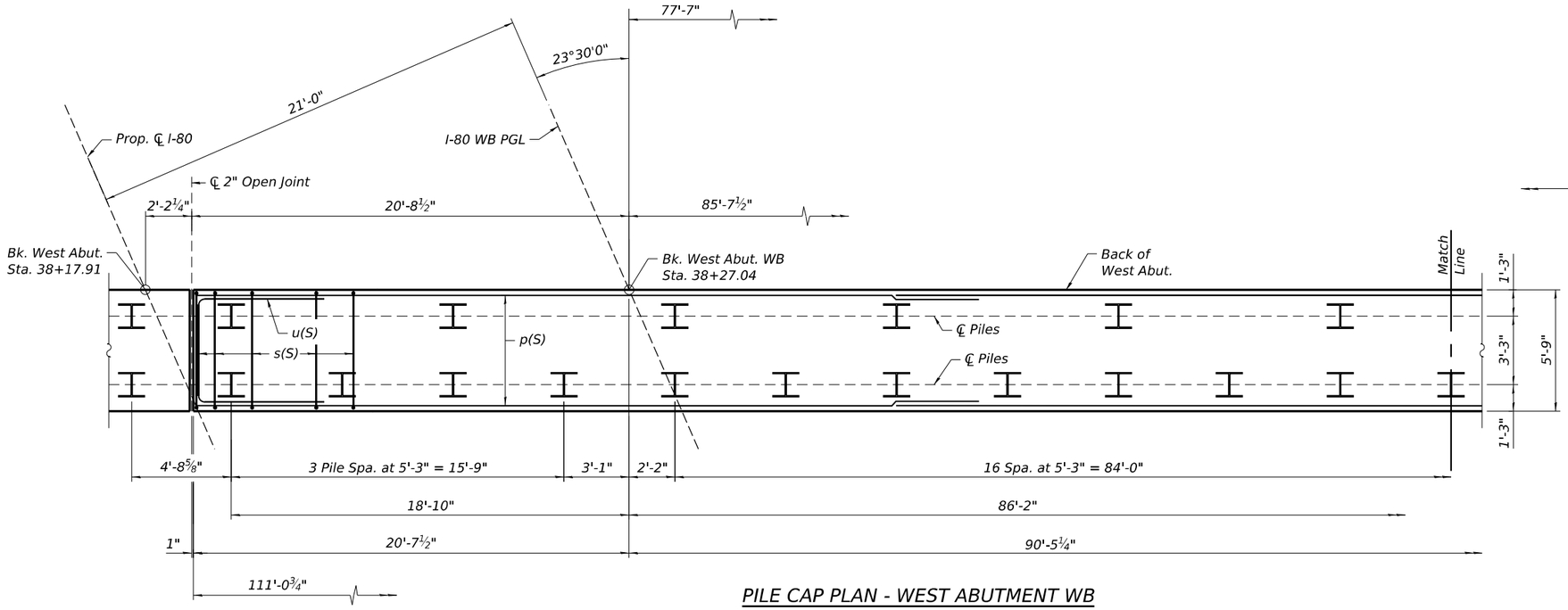

PILE CAP PLAN - WEST ABUTMENT WB

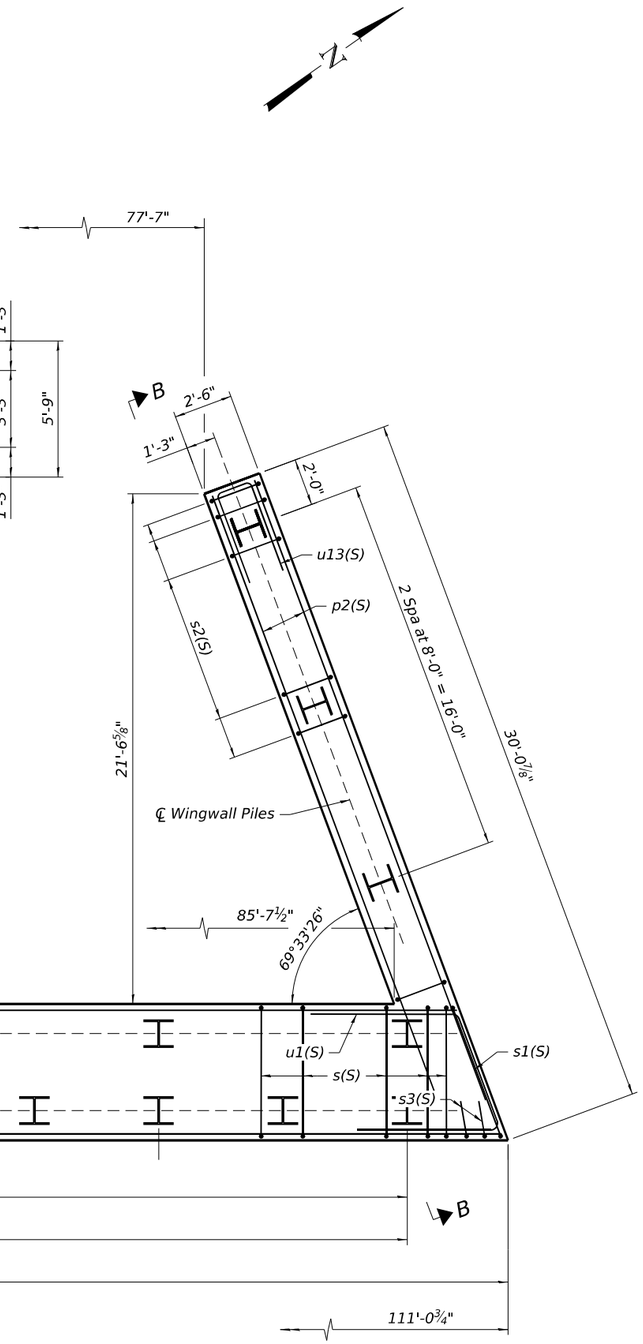

PILE CAP PLAN - WEST ABUTMENT WB

NOTES:

1. For Elevations and Sections, see Sheet S-251.
2. For Drainage Penetration details, see Sheet S-251.
3. For Section B-B, see Sheet S-253.
4. For additional notes, and Bill of Material, see Sheet S-255.

PILE DATA

Type: HP14 x 89 with Pile Shoes
Nominal Required Bearing: 705 kip
Factored Resistance Available: 270 kip
Est. Length: 48ft
No. Production Piles: 34
No. Test Piles: 1

MODEL: Default
FILE NAME: pw://transystems-pw.bentley.com:transyscorp-pw1-hosted/Documents/Projects_2018/CH401/401180022/03-WSP/CAD/62R23-RB-1/Sheets/Structural/0998309-62R23-S752-ABW03.dgn

WSP USA Inc. 30 N. LASALLE STREET SUITE 4200 CHICAGO, IL 60602 TEL: (312) 782-8150 FAX: (312) 782-1684	USER NAME = USSJ696614	DESIGNED - KA	REVISED -	STATE OF ILLINOIS DEPARTMENT OF TRANSPORTATION	WEST ABUTMENT FOUNDATION PLAN WB STRUCTURE NUMBER 099-8309 WB AND 099-8325 EB
		CHECKED - LAS	REVISED -		
	PLOT SCALE = 8:0 ':" / in.	DRAWN - KA	REVISED -		
	PLOT DATE = 11/5/2025	CHECKED - LAS	REVISED -		SHEET S-249 OF S-333 SHEETS

F.A.I RTE.	SECTION	COUNTY	TOTAL SHEETS	SHEET NO.
I-80	FAI 80 21 STRUCTURE 2	WILL	1230	830
		CONTRACT NO. 62R23		
	ILLINOIS	FED. AID PROJECT		

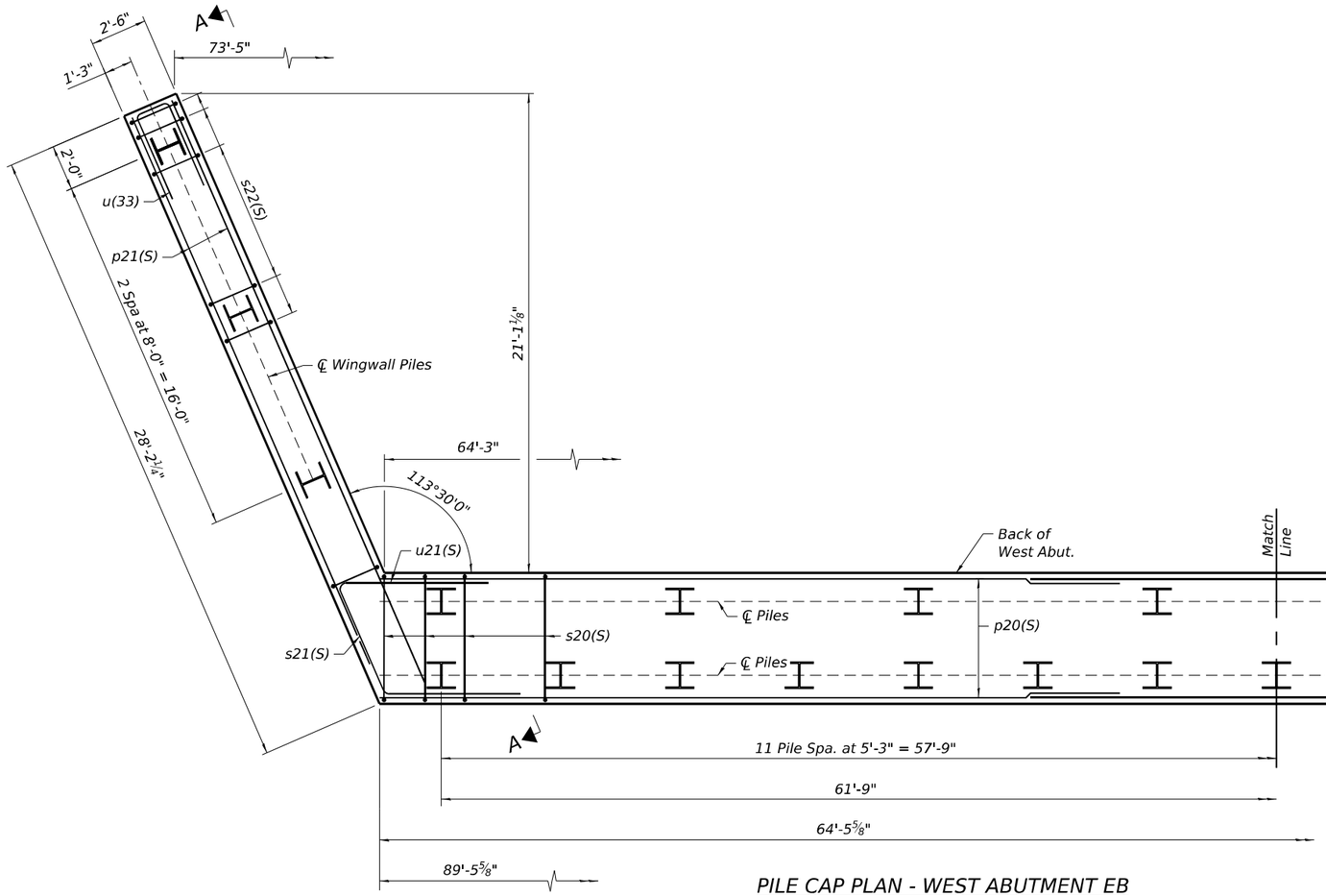

PILE CAP PLAN - WEST ABUTMENT EB

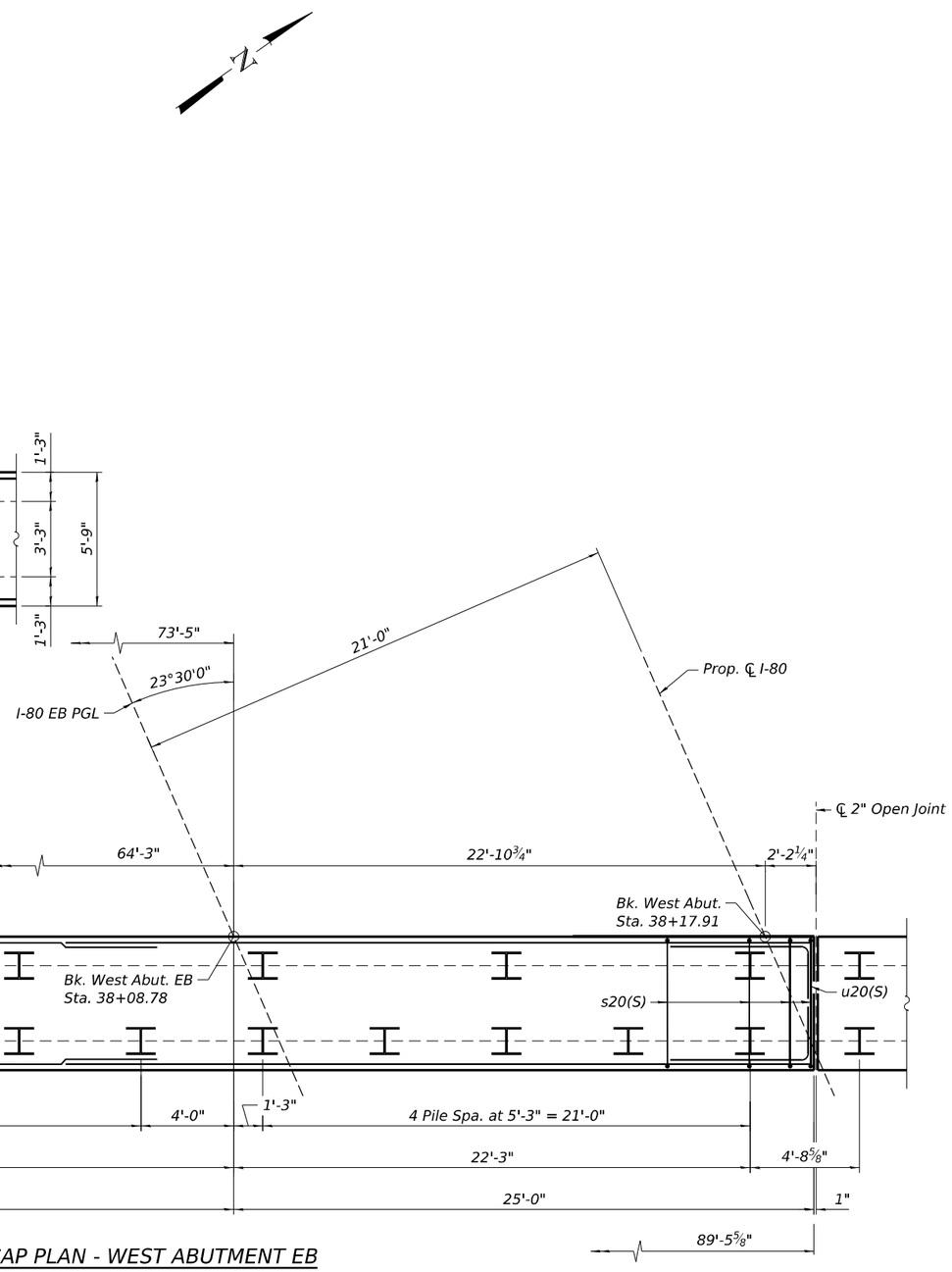

PILE CAP PLAN - WEST ABUTMENT EB

NOTES:

1. For Elevations and Sections, see Sheet S-252.
2. For Drainage Penetration details, see Sheet S-252.
3. For Section A-A, see Sheet S-254.
4. For additional notes, and Bill of Material, see Sheet S-255.

PILE DATA

Type: HP14 x 89 with Pile Shoes
Nominal Required Bearing: 689 kip
Factored Resistance Available: 266 kip
Est. Length: 45ft
No. Production Piles: 28
No. Test Piles: 1

MODEL: Default
FILE NAME: pw://transystems-pw.bentley.com:transyscorp-pw1-hosted/Documents/Projects_2018/CH401/401180022/03-WSP/CAD/62R23-RB-1/Sheets/Structural/0998309-62R23-S753-ABW04.dgn

WSP USA Inc.
30 N. LASALLE STREET
SUITE 4200
CHICAGO, IL 60602
TEL: (312) 782-8150
FAX: (312) 782-1684

USER NAME = USSJ696614	DESIGNED - KA	REVISED -	
	CHECKED - LAS	REVISED -	
PLOT SCALE = 8:0 ':" / in.	DRAWN - KA	REVISED -	
PLOT DATE = 11/5/2025	CHECKED - LAS	REVISED -	

STATE OF ILLINOIS
DEPARTMENT OF TRANSPORTATION

WEST ABUTMENT FOUNDATION PLAN EB
STRUCTURE NUMBER 099-8309 WB AND 099-8325 EB

SHEET S-250 OF S-333 SHEETS

F.A.I RTE.	SECTION	COUNTY	TOTAL SHEETS	SHEET NO.
I-80	FAI 80 21 STRUCTURE 2	WILL	1230	831
		CONTRACT NO. 62R23		
	ILLINOIS	FED. AID PROJECT		

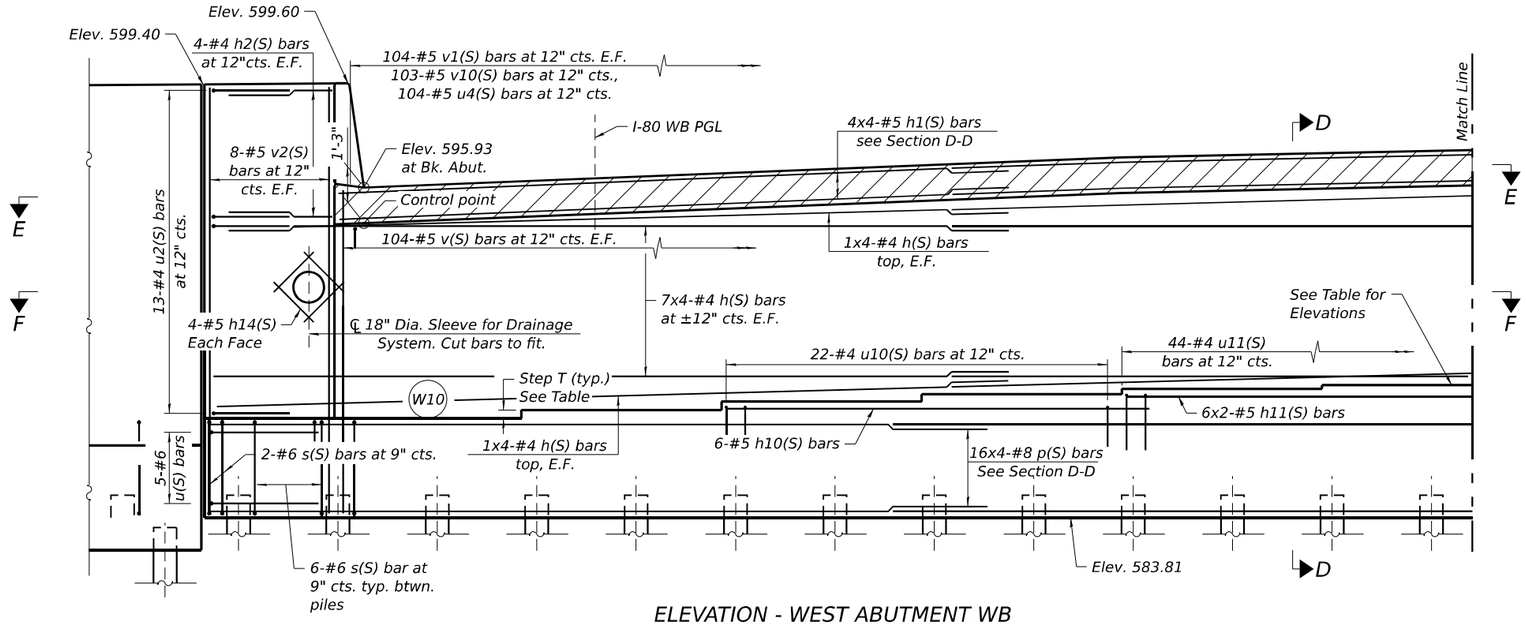

ELEVATION - WEST ABUTMENT WB

(LOOKING WEST)

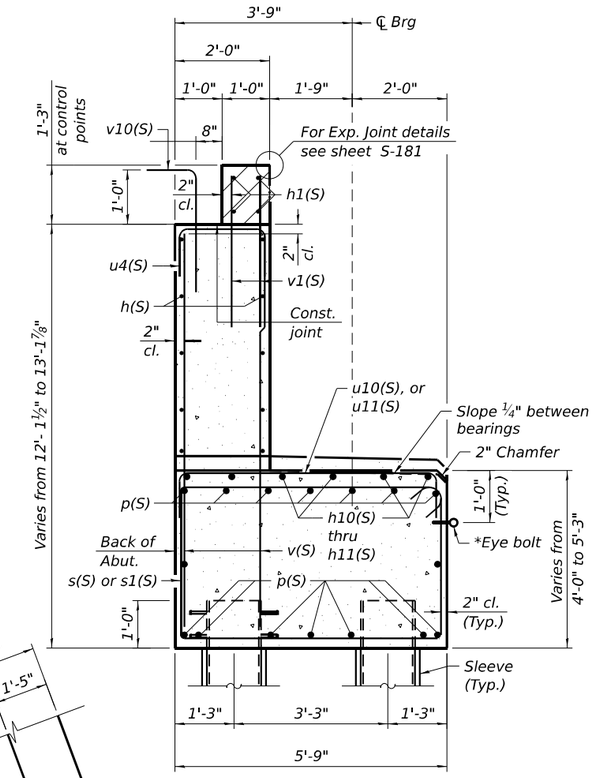

SECTION D-D

(At Rt. ∠'s)

*Stainless Steel Eye Bolt with Shoulder to Match Dia. of Ferrule Loop Insert spaced at 6'-0" max center. See sheet S-255 for details. Cost included with Concrete Structures

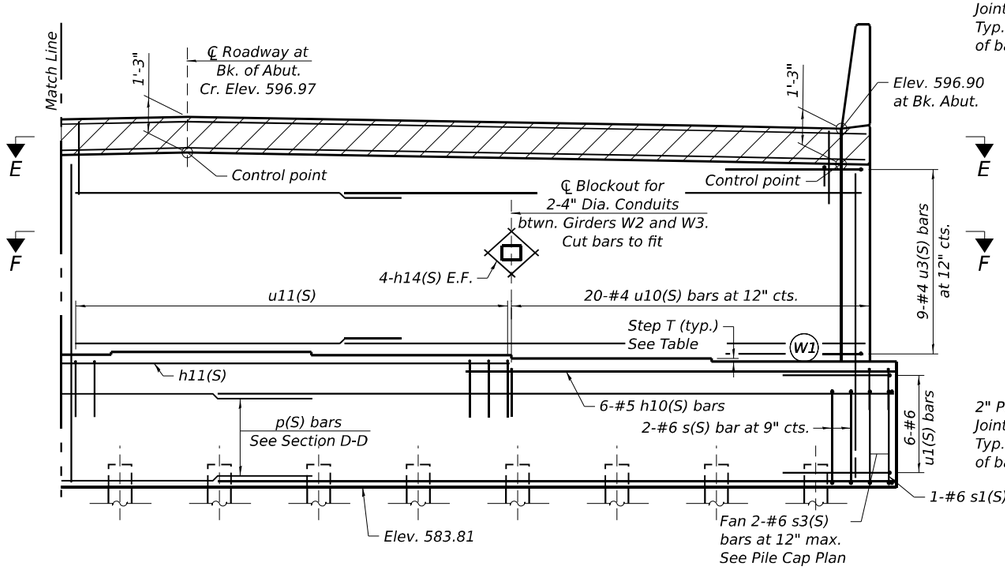

ELEVATION - WEST ABUTMENT WB

(LOOKING WEST)

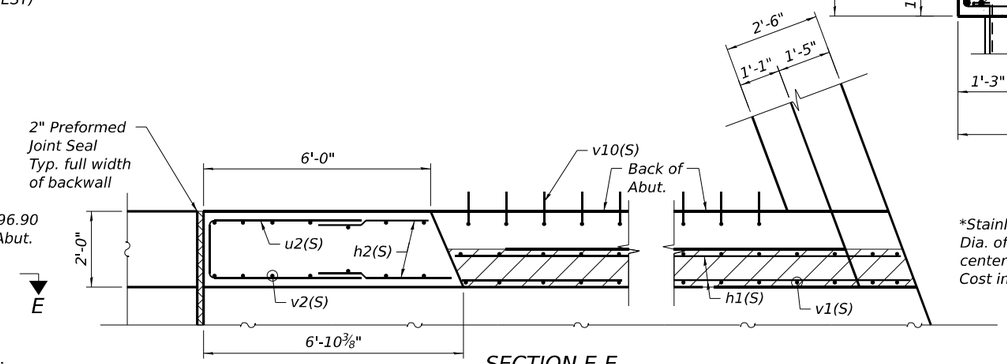

SECTION E-E

MIN. BAR LAP

#4 bar - 2'-11"
#5 bar - 3'-7"
#8 bar - 8'-2"

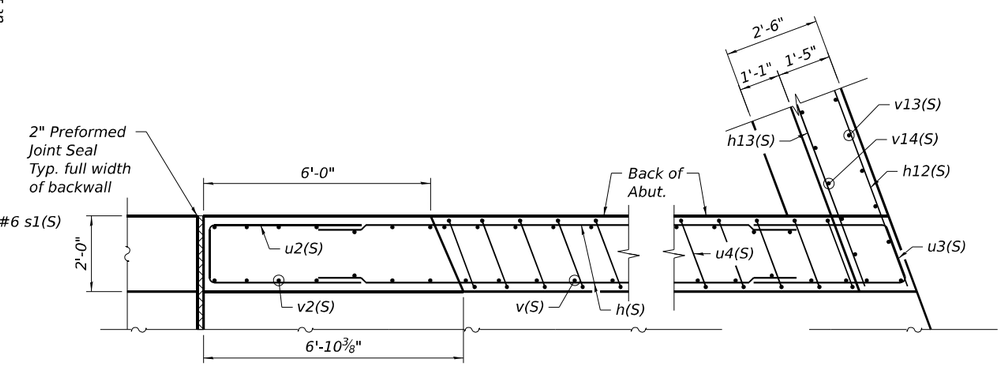

SECTION F-F

BEARING SEAT ELEVATIONS

BEAM	BRG. SEAT ELEVATION	T (Inch)
W10	587.81	
W9	588.09	3½"
W8	588.39	3½"
W7	588.65	3⅛"
W6	588.84	2¼"
W5	588.97	1½"
W4	589.06	1¼"
W3	588.95	1⅜"
W2	588.83	1⅜"
W1	588.72	1⅜"

NOTES:

1. For Pile Cap Plan, see Sheet S-249.
2. For additional notes, and Bill of Material, see Sheet S-255.

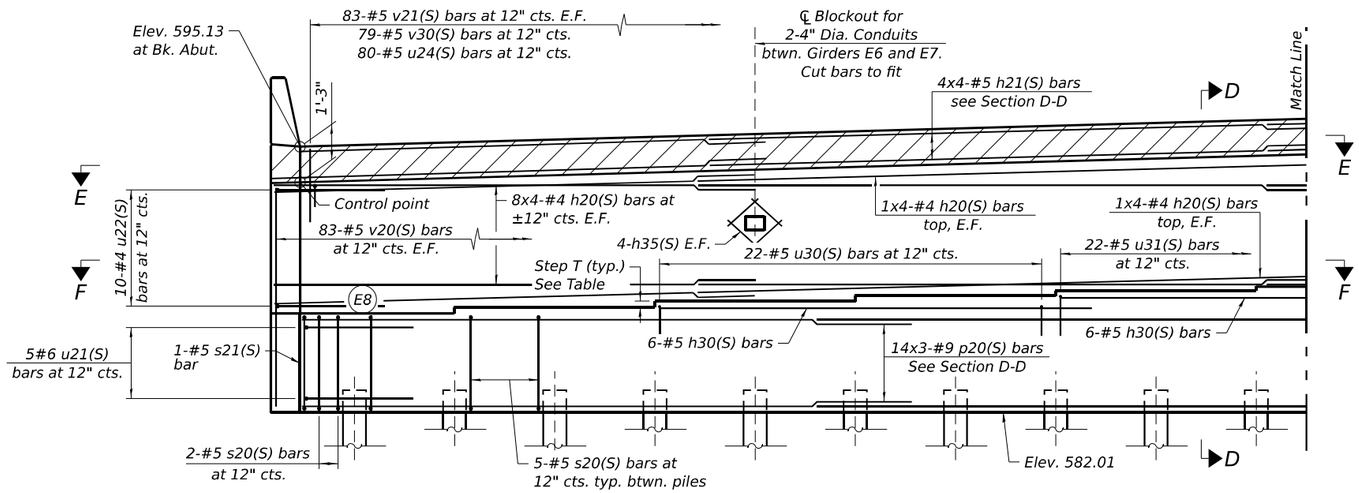

ELEVATION - WEST ABUTMENT EB

(LOOKING WEST)

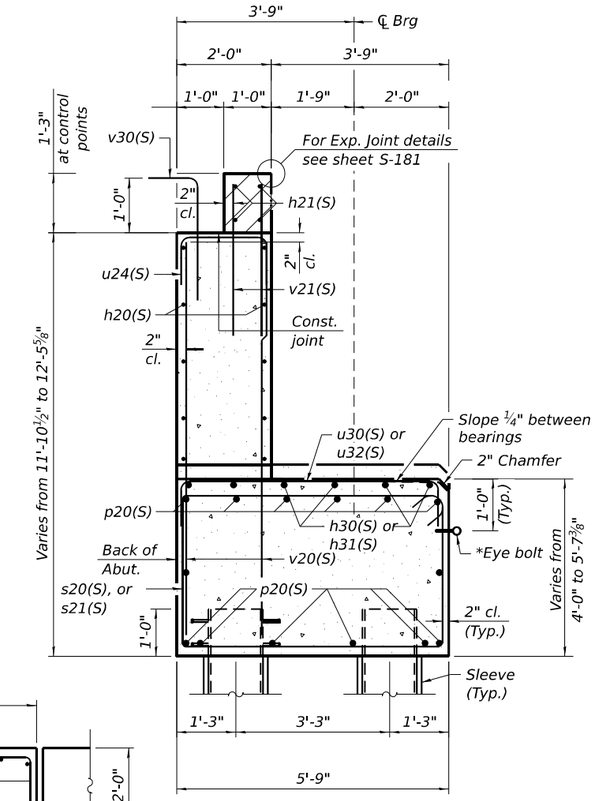

SECTION D-D

(At Rt. ∠'s)

*Stainless Steel Eye Bolt with Shoulder to Match Dia. of Ferrule Loop Insert spaced at 6'-0" max center. See sheet S-255 for details.
Cost included with Concrete Structures

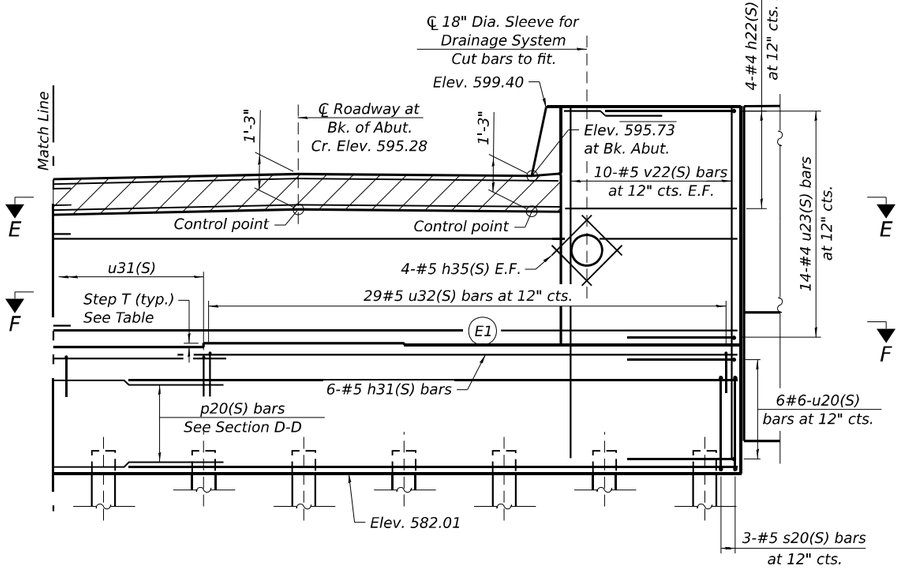

ELEVATION - WEST ABUTMENT EB

(LOOKING WEST)

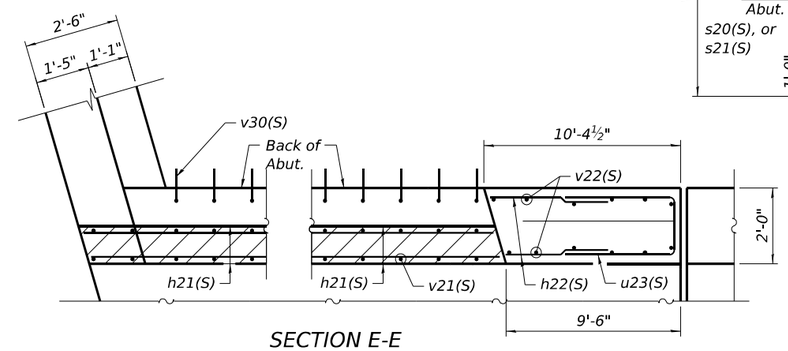

SECTION E-E

MIN. BAR LAP

#4 bar - 2'-11"
#5 bar - 3'-7"
#9 bar - 10'-4"

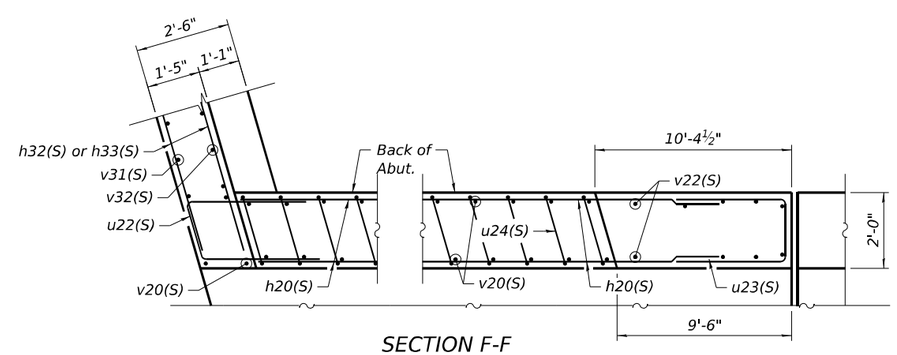

SECTION F-F

BEARING SEAT ELEVATIONS

BEAM	BRG. SEAT ELEVATION	T (Inch)
E8	586.01	
		3⅞"
E7	586.33	
		3⅞"
E6	586.65	
		3½"
E5	586.95	
		3⅛"
E4	587.20	
		2¾"
E3	587.43	
		2⅜"
E2	587.62	
		1⅛"
E1	587.54	

NOTES:

1. For Pile Cap Plan, see Sheet S-250.
2. For additional notes, and Bill of Material, see Sheet S-255.

MODEL: Default
FILE NAME: pw://transystems-pw.bentley.com:transyscorp-pw1-hosted/Documents/Projects_2018/CH401/401180022/03-WSP/CAD/62R23-RB-1/Sheets/Structural/0998309-62R23-S255-ABW06.dgn

WSP USA Inc.
30 N. LASALLE STREET
SUITE 4200
CHICAGO, IL 60602
TEL: (312) 782-8150
FAX: (312) 782-1684

USER NAME = USSJ696614	DESIGNED - KA	REVISED -	
	CHECKED - LAS	REVISED -	
PLOT SCALE = 8:0 ':" / in.	DRAWN - KA	REVISED -	
PLOT DATE = 11/5/2025	CHECKED - LAS	REVISED -	

STATE OF ILLINOIS
DEPARTMENT OF TRANSPORTATION

WEST ABUTMENT ELEVATION EB
STRUCTURE NUMBER 099-8309 WB AND 099-8325 EB

SHEET S-252 OF S-333 SHEETS

F.A.I RTE.	SECTION	COUNTY	TOTAL SHEETS	SHEET NO.
I-80	FAI 80 21 STRUCTURE 2	WILL	1230	833
		CONTRACT NO. 62R23		
		ILLINOIS	FED. AID PROJECT	

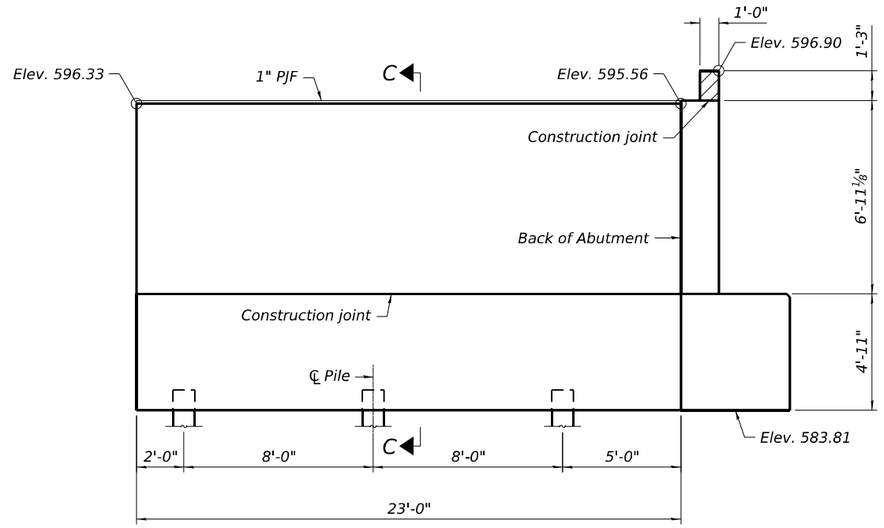

SECTION B-B

(WB North Wingwall)
(Showing dimensions)

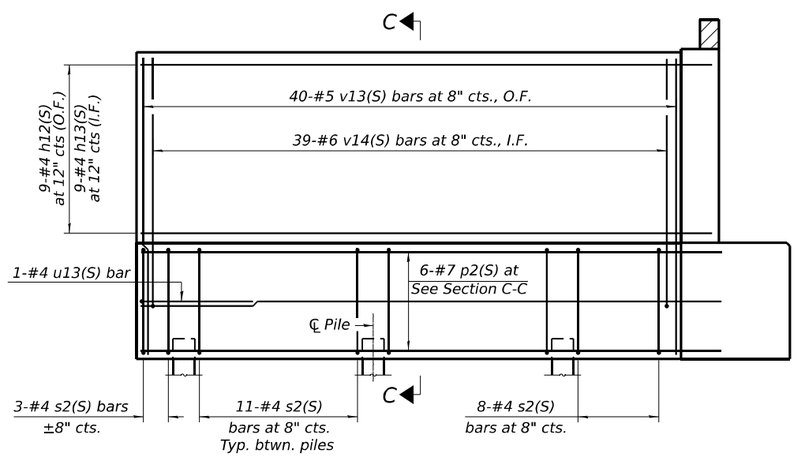

SECTION B-B

(WB North Wingwall)
(Showing reinforcement)

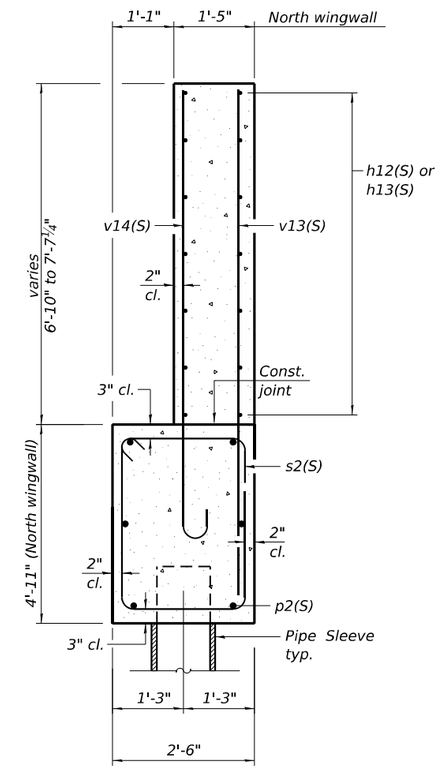

SECTION C-C

(At Rt. ∠'s)

NOTES:

1. For additional notes, and Bill of Material, see Sheet S-255.
2. For section B-B, See Sheet S-249

MODEL: Sheet
FILE NAME: pw://transystems-pw.bentley.com:transyscorp-pw1-hosted/Documents/Projects_2018/CH401/401180022/03-WSP/CAD/62R23-IB-1/Sheets/Structural/0998309-62R23-S756-ABW07.dgn

WSP USA Inc.
30 N. LASALLE STREET
SUITE 4200
CHICAGO, IL 60602
TEL: (312) 782-8150
FAX: (312) 782-1684

USER NAME = USSJ696614	DESIGNED - KA	REVISED -	
	CHECKED - LAS	REVISED -	
PLOT SCALE = 8:0.0000 ':" / in.	DRAWN - PP	REVISED -	
PLOT DATE = 11/5/2025	CHECKED - LAS	REVISED -	

STATE OF ILLINOIS
DEPARTMENT OF TRANSPORTATION

WEST ABUTMENT WINGWALLS 1
STRUCTURE NUMBER 099-8309 WB AND 099-8325 EB

SHEET S-253 OF S-333 SHEETS

F.A.I RTE.	SECTION	COUNTY	TOTAL SHEETS	SHEET NO.
I-80	FAI 80 21 STRUCTURE 2	WILL	1230	834
		CONTRACT NO. 62R23		
		ILLINOIS	FED. AID PROJECT	

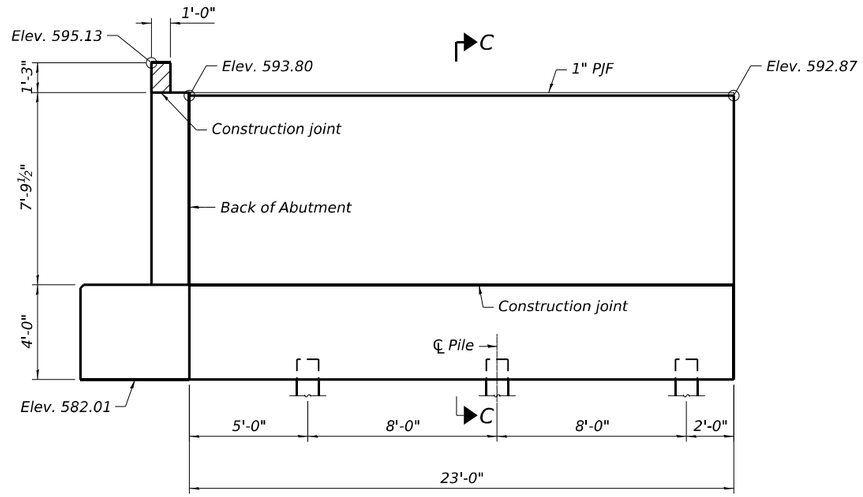

SECTION A-A
(EB South Wingwall)
(Showing dimensions)

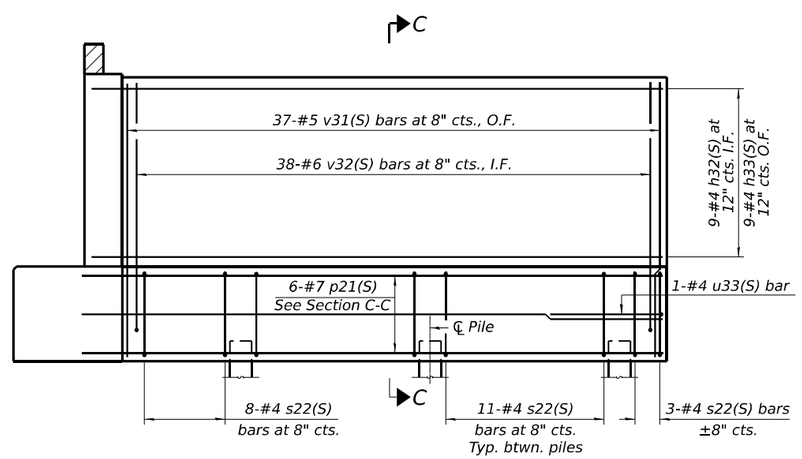

SECTION A-A
(EB South Wingwall)
(Showing reinforcement)

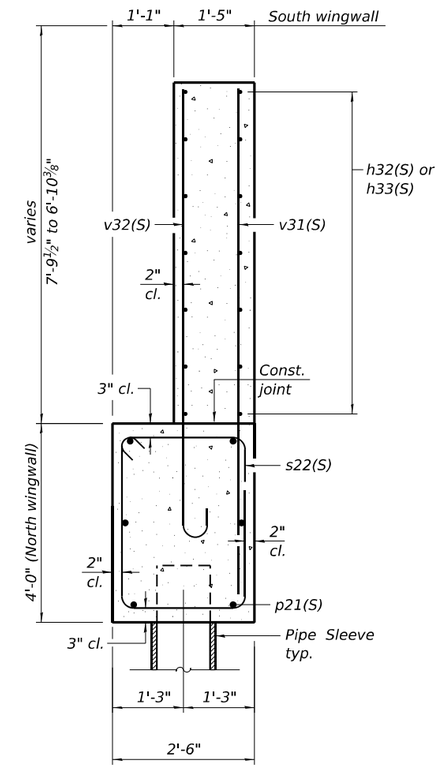

SECTION C-C
(At Rt. ∠'s)

NOTES:

1. For additional notes, and Bill of Material, see Sheet S-255.
2. For Section A-A, See Sheet S-250

MODEL: Sheet
FILE NAME: pw://transystems-pw.bentley.com:transyscorp-pw1-hosted/Documents/Projects_2018/CH401401180022/03-WSP/CAD/62R23-RB-1/Sheets/Structural/0998309-62R23-S757-ABW08.dgn

WSP USA Inc.
30 N. LASALLE STREET
SUITE 4200
CHICAGO, IL 60602
TEL: (312) 782-8150
FAX: (312) 782-1684

USER NAME = USSJ696614	DESIGNED - KA	REVISED -	
	CHECKED - LAS	REVISED -	
PLOT SCALE = 8:0.0000 ':" / in.	DRAWN - KA	REVISED -	
PLOT DATE = 11/5/2025	CHECKED - LAS	REVISED -	

STATE OF ILLINOIS
DEPARTMENT OF TRANSPORTATION

WEST ABUTMENT WINGWALLS 2
STRUCTURE NUMBER 099-8309 WB AND 099-8325 EB

SHEET S-254 OF S-333 SHEETS

F.A.I RTE.	SECTION	COUNTY	TOTAL SHEETS	SHEET NO.
I-80	FAI 80 21 STRUCTURE 2	WILL	1230	835
		CONTRACT NO. 62R23		
	ILLINOIS	FED. AID PROJECT		

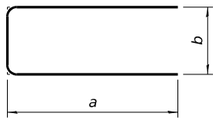

BARS u(S), u2(S), u13(S), u20(S), u23(S), and u33(S)

DIMENSION TABLE

BAR	a	b
u(S)	4'-4"	5'-3"
u2(S)	4'-2"	1'-8"
u13(S)	2'-2"	2'-1"
u20(S)	4'-4"	5'-3"
u23(S)	4'-2"	1'-8"
u33(S)	2'-2"	2'-1"

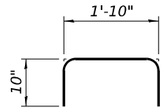

BAR u4(S) & u24(S)

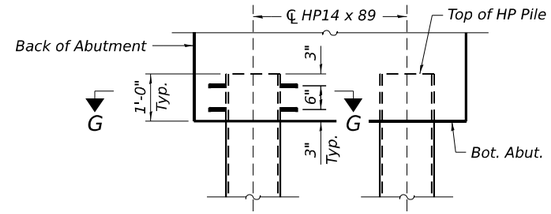

PILE STUD CONNECTOR DETAIL

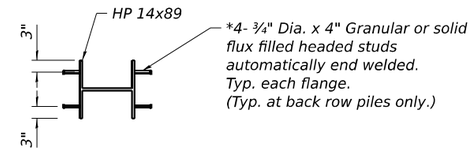

SECTION G-G

*Cost included with furnishing piles.

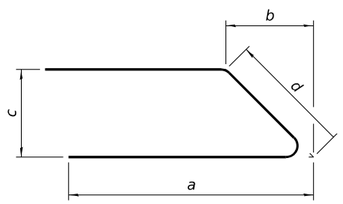

BARS u1(S), u3(S), and u21(S), u22(S)

DIMENSION TABLE

BAR	a	b	c	d
u1(S)	4'-4"	2'-0"	5'-3"	5'-7"
u3(S)	4'-2"	9"	1'-8"	1'-10"
u21(S)	4'-4"	2'-6"	5'-3"	5'-10"
u22(S)	4'-2"	9"	1'-8"	1'-10"

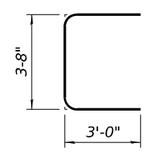

BAR s3(S)

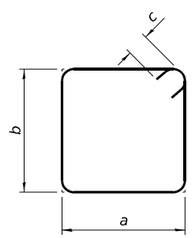

BARS s(S),s1(S), s2(S) s20(S), s21(S), and s22(S)

DIMENSION TABLE

BAR	a	b	c
s(S)	5'-5"	3'-8"	8"
s1(S)	5'-9"	3'-8"	8'
s2(S)	2'-2"	4'-5"	4½"
s20(S)	5'-5"	3'-8"	5½"
s21(S)	5'-11"	3'-8"	5½"
s22(S)	2'-2"	3'-8"	4½"

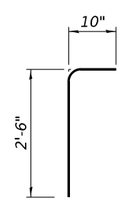

BARS v10(S) & v30(S)

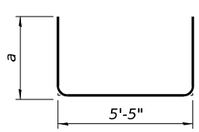

BAR u10, u11(S), u30(S), u31(S), u32(S)

DIMENSION TABLE

BAR	a
u10(S)	1'-3"
u11(S)	1'-9"
u30(S)	1'-3"
u31(S)	1'-10"
u32(S)	2'-4"

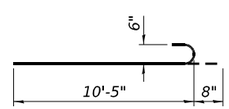

BAR v14(S) and v32(S)

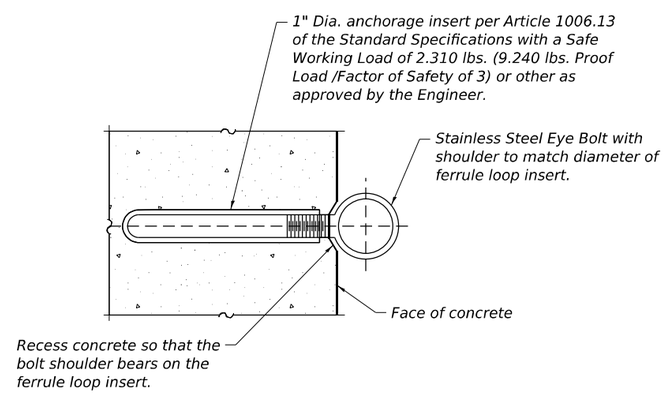

EYE BOLT DETAIL

(Cost included with Concrete Structures)

WEST ABUTMENT - WB BILL OF MATERIAL

Bar	No.	Size	Length	Shape
h(S)	72	#4	29'-10"	
h1(S)	16	#5	30'-4"	
h2(S)	8	#4	5'-9"	
h10(S)	12	#5	24'-0"	
h11(S)	12	#5	22'-10"	
h12(S)	9	#4	25'-8"	
h13(S)	9	#4	25'-2"	
h14(S)	16	#5	4'-0"	
p(S)	64	#8	33'-10"	
p2(S)	6	#7	29'-9"	
s(S)	124	#6	19'-6"	
s1(S)	1	#6	20'-2"	
s2(S)	33	#4	13'-11"	
s3(S)	2	#6	9'-8"	
u(S)	5	#6	13'-11"	
u1(S)	6	#6	14'-3"	
u2(S)	13	#4	10'-0"	
u3(S)	9	#4	10'-2"	
u4(S)	104	#5	3'-6"	
u10(S)	42	#4	7'-11"	
u11(S)	44	#4	8'-11"	
u13(S)	1	#4	6'-5"	
v(S)	208	#5	11'-9"	
v1(S)	208	#5	2'-6"	
v2(S)	16	#5	15'-1"	
v10(S)	103	#5	3'-4"	
v13(S)	40	#5	11'-4"	
v14(S)	39	#6	11'-1"	
Concrete Structures			Cu. Yd.	216.3
Concrete Superstructure			Cu. Yd.	4.8
Reinforcement Bars, Stainless Steel			Pound	17,670
Furnishing Steel Piles HP14x89			Foot	1,632
Driving Piles			Foot	1,632
Test Pile Steel HP14x89			Each	1
Pile Shoes			Each	35
Concrete Sealer			Sq. Ft.	1,398

WEST ABUTMENT - EB BILL OF MATERIAL

Bar	No.	Size	Length	Shape
h20(S)	80	#4	25'-1"	
h21(S)	16	#5	23'-0"	
h22(S)	8	#4	9'-2"	
h30(S)	12	#5	24'-0"	
h31(S)	6	#5	31'-2"	
h32(S)	9	#4	24'-4"	
h33(S)	9	#4	23'-9"	
h35(S)	16	#5	4'-0"	
p20(S)	42	#9	36'-8"	
p21(S)	6	#7	27'-10"	
s20(S)	85	#5	19'-1"	
s21(S)	1	#5	20'-1"	
s22(S)	33	#4	12'-5"	
u20(S)	6	#6	13'-11"	
u21(S)	5	#6	14'-6"	
u22(S)	10	#4	10'-2"	
u23(S)	14	#4	10'-0"	
u24(S)	80	#5	3'-6"	
u30(S)	22	#4	7'-11"	
u31(S)	22	#4	9'-1"	
u32(S)	29	#4	10'-1"	
u33(S)	1	#4	6'-5"	
v20(S)	166	#5	11'-6"	
v21(S)	166	#5	2'-6"	
v22(S)	20	#5	16'-11"	
v30(S)	79	#5	3'-4"	
v31(S)	37	#5	11'-4"	
v32(S)	38	#6	11'-1"	
Concrete Structures			Cu. Yd.	164.3
Concrete Superstructure			Cu. Yd.	3.8
Reinforcement Bars, Stainless Steel			Pound	15,450
Furnishing Steel Piles HP14x89			Foot	1,260
Driving Piles			Foot	1,260
Test Pile Steel HP14x89			Each	1
Pile Shoes			Each	29
Concrete Sealer			Sq. Ft.	1,212

NOTES:

1. Hatched area to be poured separately after superstructure falsework has been removed and after approach slab side formwork has been removed.
2. Quantity of concrete in wingwall parapet and hatched area included with Concrete Superstructure.
3. Space reinforcement in cap to miss anchor bolts.
4. Pour steps monolithically with cap.
5. For details of piles see sheet S-316.
6. The top of back wall and approach slab seat shall have a constant slope determined from the control points shown.
7. Concrete Sealer shall be applied to the bearing seats and front faces of the hatched block, back wall, and abutment cap.

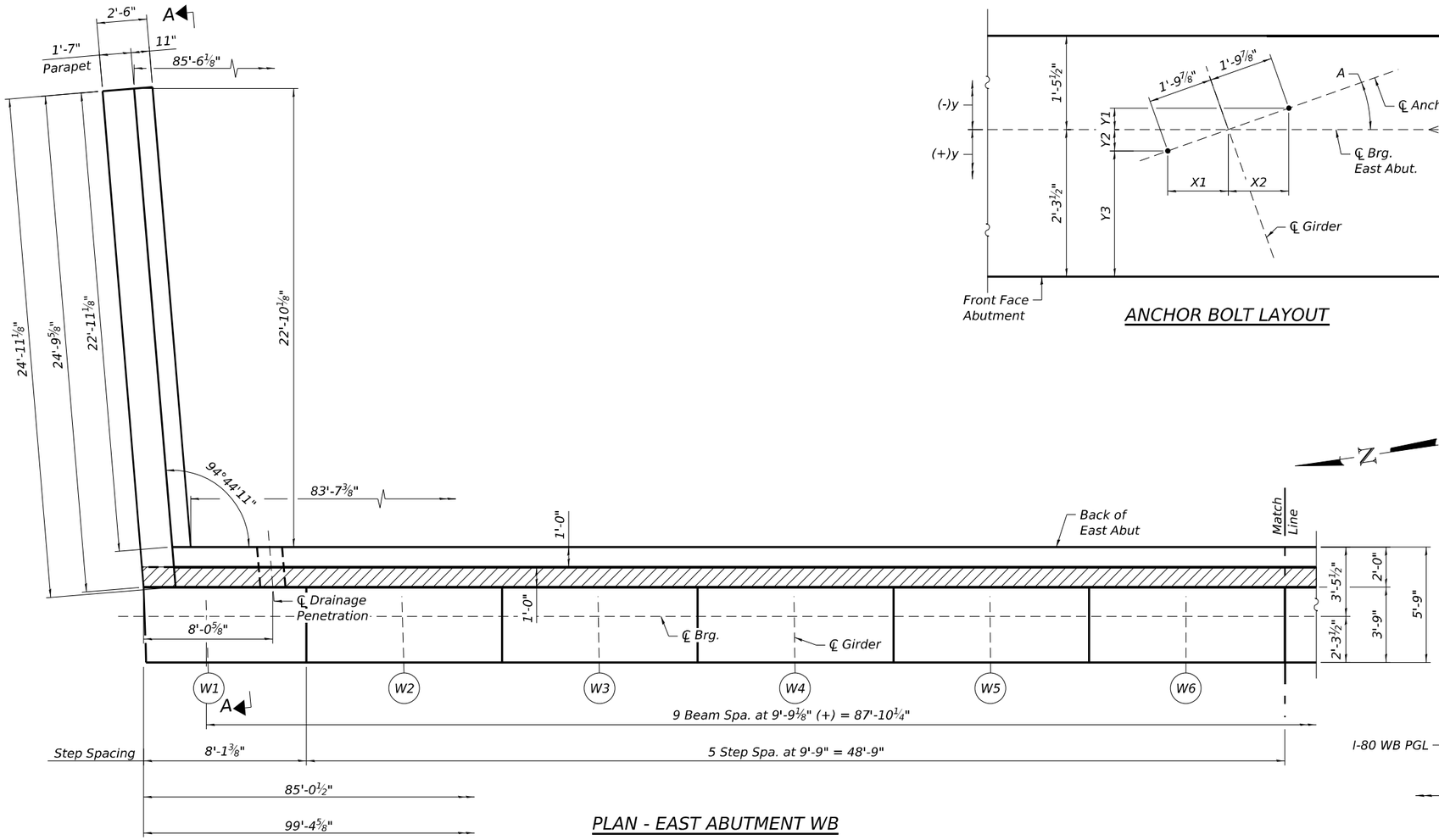

PLAN - EAST ABUTMENT WB

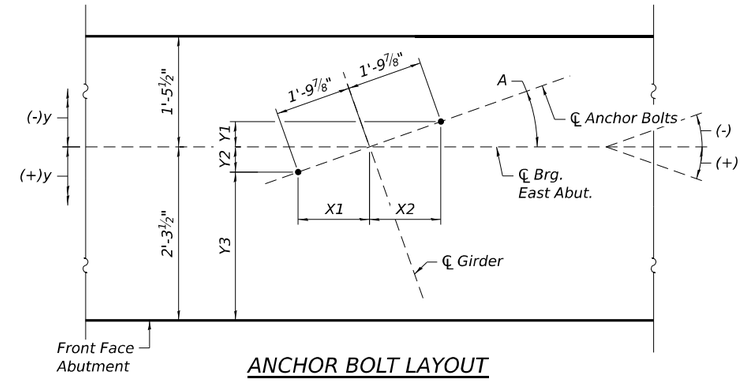

ANCHOR BOLT LAYOUT

ANCHOR BOLT DIMENSIONS

Girder	angle "A"	X1	X2	Y1	Y2	Y3
W1	(-) 1°55'30"	1'-9⅞"	1'-9⅞"	¾"	¾"	2'-2¾"
W2	(-) 1°30'45"	1'-9⅞"	1'-9⅞"	9/16"	9/16"	2'-2 15/16"
W3	(-) 1°06'10"	1'-9⅞"	1'-9⅞"	7/16"	7/16"	2'-3 1/16"
W4	(-) 0°41'44"	1'-9⅞"	1'-9⅞"	¼"	¼"	2'-3¼"
W5	(-) 0°17'27"	1'-9⅞"	1'-9⅞"	⅛"	⅛"	2'-3⅜"
W6	(+) 0°06'39"	1'-9⅞"	1'-9⅞"	(-) 1/16"	(-) 1/16"	2'-3 9/16"
W7	(+) 0°30'37"	1'-9⅞"	1'-9⅞"	(-) 3/16"	(-) 3/16"	2'-3 11/16"
W8	(+) 0°54'24"	1'-9⅞"	1'-9⅞"	(-)⅜"	(-)⅜"	2'-3⅞"
W9	(+) 1°18'02"	1'-9⅞"	1'-9⅞"	(-)½"	(-)½"	2'-4"
W10	(+) 1°41'30"	1'-9⅞"	1'-9⅞"	(-)⅝"	(-)⅝"	2'-4⅛"

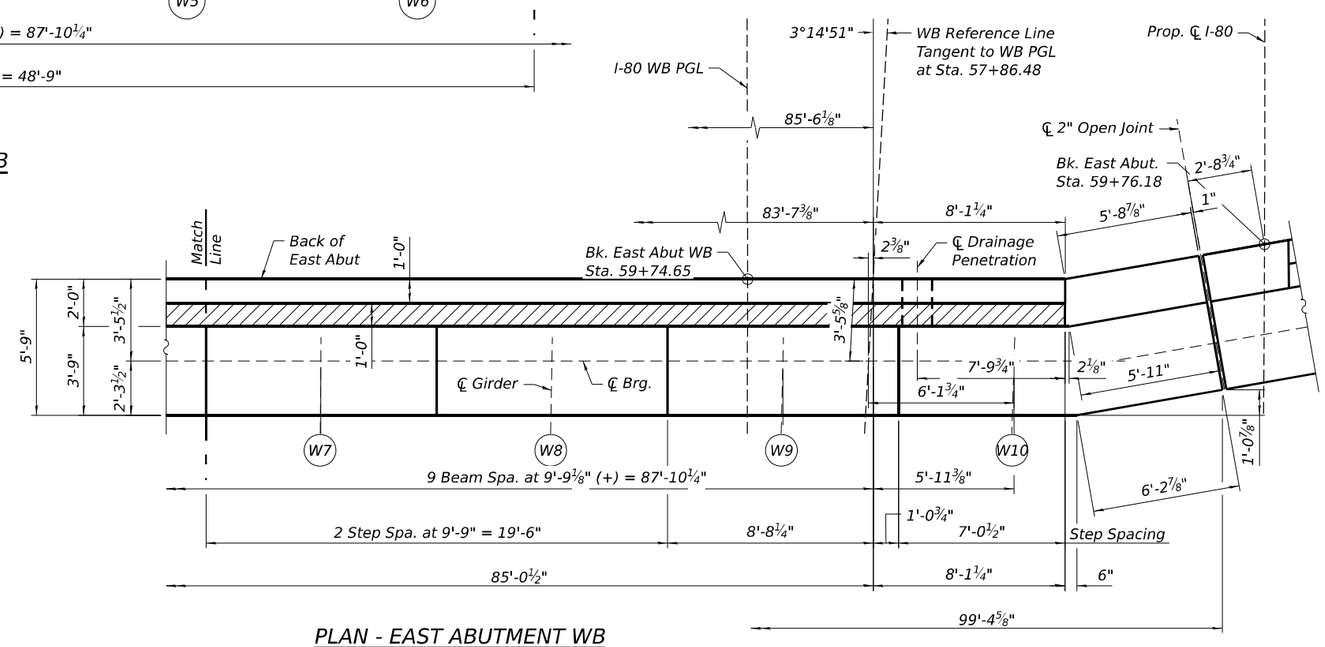

PLAN - EAST ABUTMENT WB

NOTES:

1. For Elevations and Sections, see Sheet S-260.
2. For Drainage Penetration details, see Sheet S-260.
3. For Section A-A, see Sheet S-262.
4. For additional notes, and Bill of Material, see Sheet S-264.
5. Concrete Sealer shall be applied to exposed surfaces of abutment backwall, seats, and front face above grade.

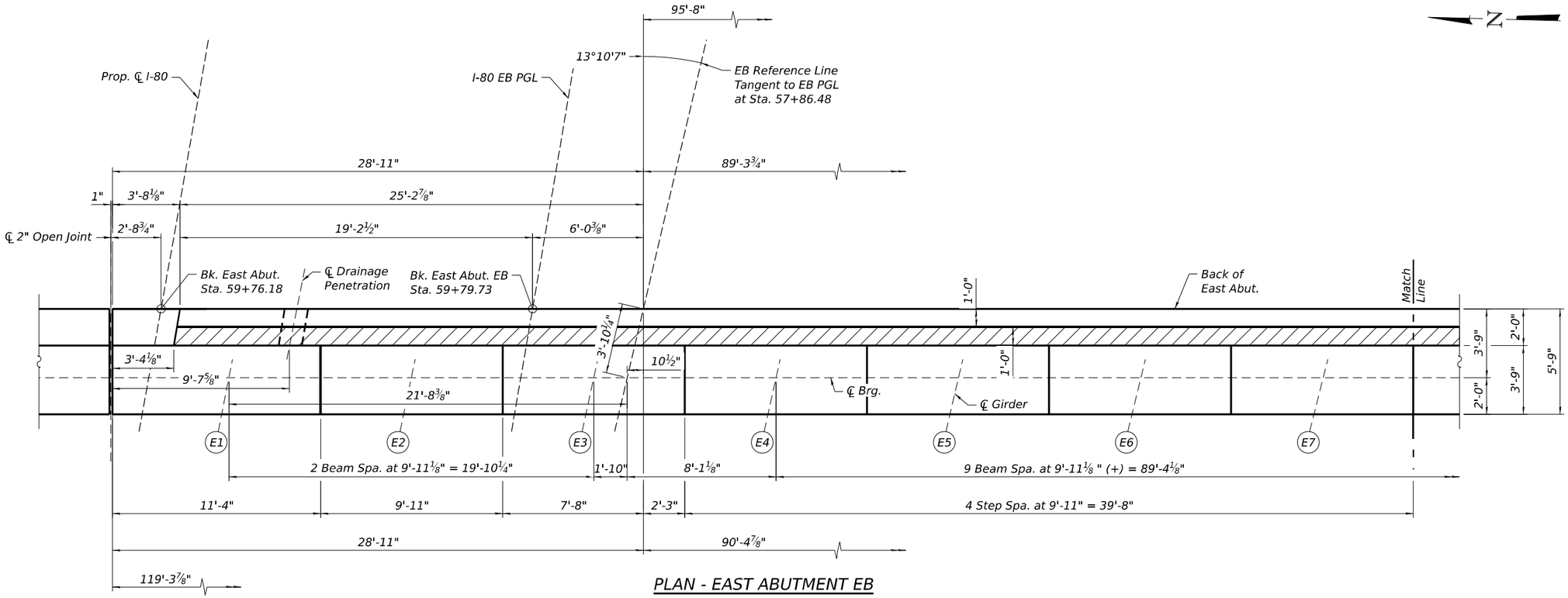

PLAN - EAST ABUTMENT EB

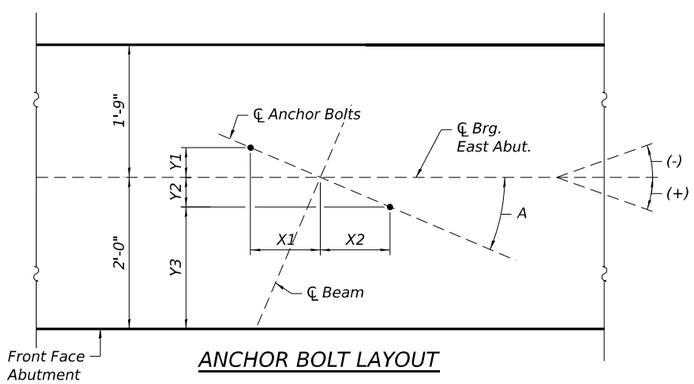

ANCHOR BOLT LAYOUT

ANCHOR BOLT DIMENSIONS

Girder	angle "A"	X1	X2	Y1	Y2	Y3
E1	(+) 11°12'39"	1'-9 9/16"	1'-9 9/16"	4¼"	4¼"	1'-7¾"
E2	(+) 11°41'56"	1'-9 9/16"	1'-9 9/16"	4 7/16"	4 7/16"	1'-7 9/16"
E3	(+) 12°10'45"	1'-9⅜"	1'-9⅜"	4⅝"	4⅝"	1'-7⅜"
E4	(+) 12°39'06"	1'-9⅜"	1'-9⅜"	4 13/16"	4 13/16"	1'-7 3/16"
E5	(+) 13°06'59"	1'-9 5/16"	1'-9 5/16"	4 15/16"	4 15/16"	1'-7 1/16"
E6	(+) 13°34'26"	1'-9¼"	1'-9¼"	5⅛"	5⅛"	1'-6⅞"
E7	(+) 14°11'21"	1'-9 3/16"	1'-9 3/16"	5⅜"	5⅜"	1'-6⅝"
E8	(+) 14°28'01"	1'-9 3/16"	1'-9 3/16"	5 7/16"	5 7/16"	1'-6 9/16"
E9	(+) 14°54'10"	1'-9⅛"	1'-9⅛"	5⅝"	5⅝"	1'-6⅜"
E10	(+) 15°19'53"	1'-9⅛"	1'-9⅛"	5 13/16"	5 13/16"	1'-6 3/16"
E11	(+) 15°45'12"	1'-9 3/16"	1'-9 3/16"	6"	6"	1'-6"
E12	(+) 16°10'07"	1'-9⅛"	1'-9⅛"	6⅛"	6⅛"	1'-5⅞"

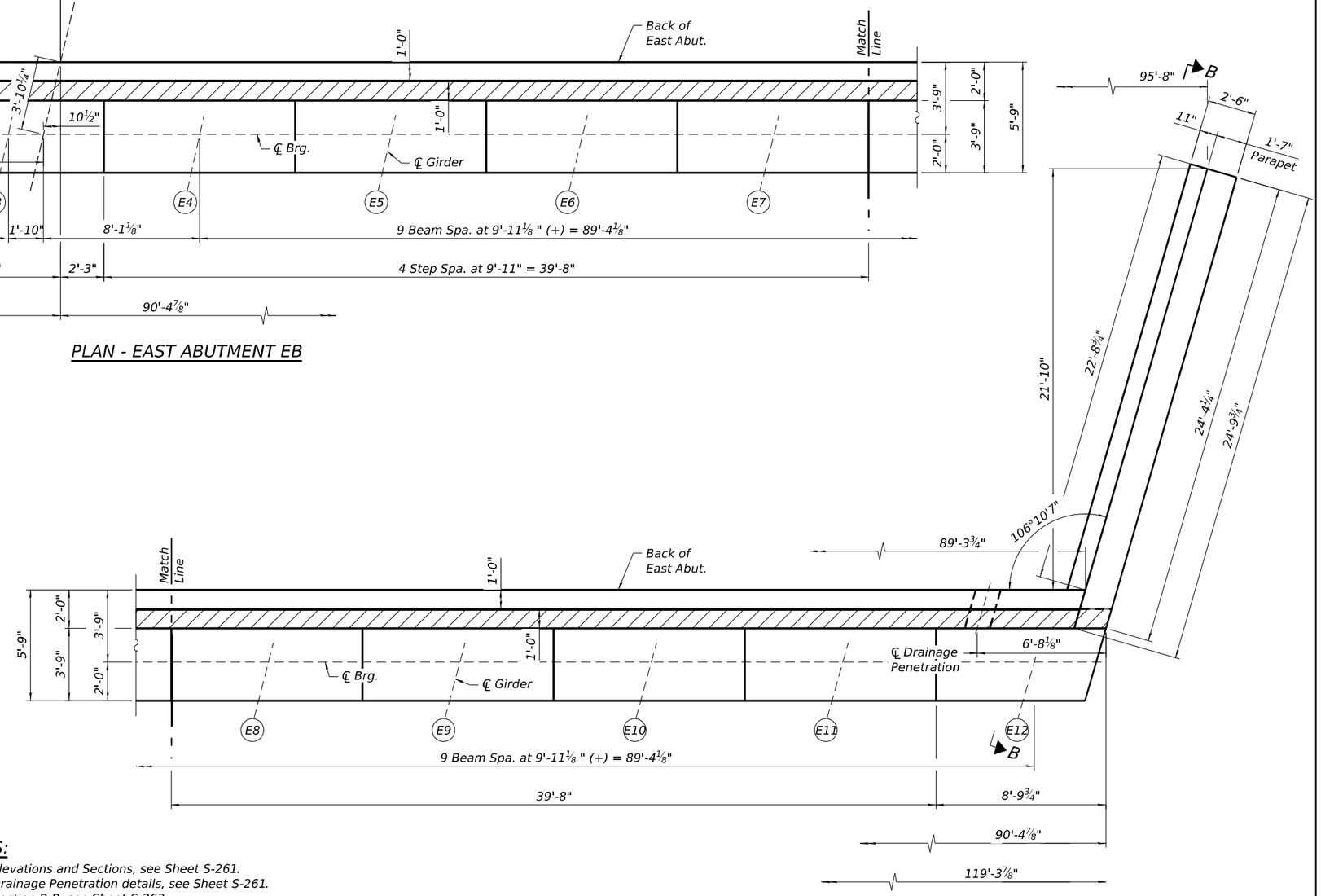

PLAN - EAST ABUTMENT EB

NOTES:

1. For Elevations and Sections, see Sheet S-261.
2. For Drainage Penetration details, see Sheet S-261.
3. For Section B-B, see Sheet S-263.
4. For additional notes, and Bill of Material, see Sheet S-264.
5. Concrete Sealer shall be applied to exposed surfaces of abutment backwall, seats, and front face above grade.

WSP USA Inc.
30 N. LASALLE STREET
SUITE 4200
CHICAGO, IL 60602
TEL: (312) 782-8150
FAX: (312) 782-1684

USER NAME = USSJ696614	DESIGNED - KA	REVISED -	
	CHECKED - LAS	REVISED -	
PLOT SCALE = 8:0 ':" / in.	DRAWN - KA	REVISED -	
PLOT DATE = 11/5/2025	CHECKED - LAS	REVISED -	

STATE OF ILLINOIS
DEPARTMENT OF TRANSPORTATION

EAST ABUTMENT PLAN EB
STRUCTURE NUMBER 099-8309 WB AND 099-8325 EB

SHEET S-257 OF S-333 SHEETS

F.A.I RTE.	SECTION	COUNTY	TOTAL SHEETS	SHEET NO.
I-80	FAI 80 21 STRUCTURE 2	WILL	1230	838
		CONTRACT NO. 62R23		
		ILLINOIS	FED. AID PROJECT	

MODEL: Default
FILE NAME: pw://transystems-pw.bentley.com:transyscorp-pw1-hosted/Documents/Projects_2018/CH401/401180022/03-WSP/CAD/62R23-RB-1/Sheets/Structural/0998309-62R23-S760-ABE02.dgn

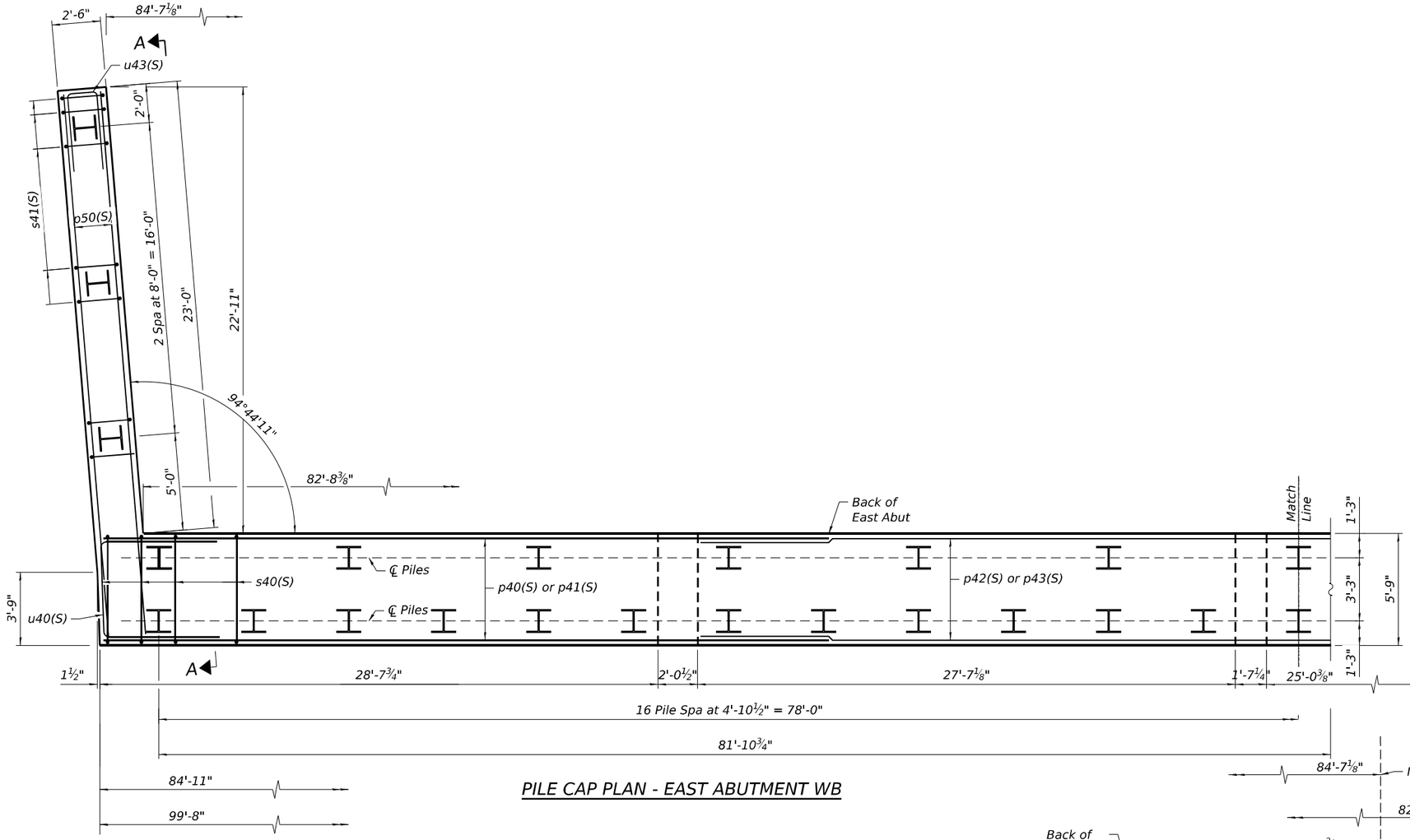

PILE CAP PLAN - EAST ABUTMENT WB

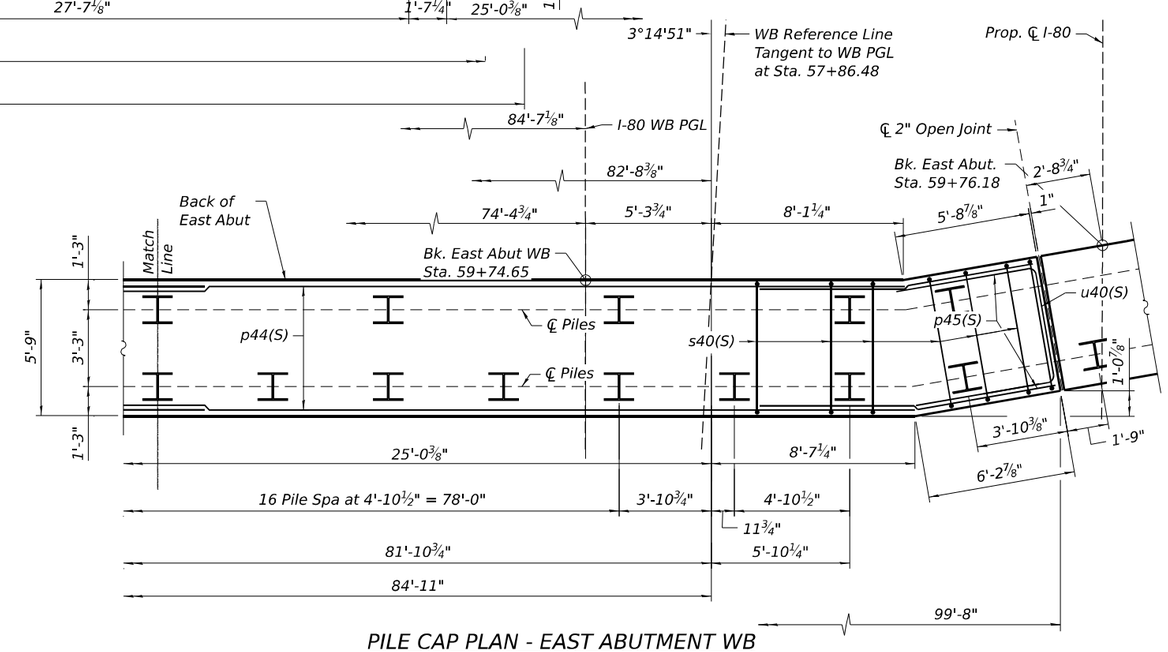

PILE CAP PLAN - EAST ABUTMENT WB

NOTES:

1. For Elevations and Sections, see Sheet S-260.
2. For Drainage Penetration details, see Sheet S-260.
3. For Section A-A, see Sheet S-262.
4. For additional notes, and Bill of Material, see Sheet S-264.

PILE DATA

Type: HP 14x89 with Pile Shoes
Nominal Required Bearing: 705kip
Factored Resistance Available: 324kip
Est. Length: 48ft
No. Production Piles: 33
No. Test Piles: 1

MODEL: Sheet
FILE NAME: pw://transystems-pw.bentley.com:transyscorp-pw1-hosted/Documents/Projects_2018/CH401/401180022/03-WSP/CAD/62R23-RB-1/Sheets/Structural/0998309-62R23-S761-ABE03.dgn

WSP USA Inc.
30 N. LASALLE STREET
SUITE 4200
CHICAGO, IL 60602
TEL: (312) 782-8150
FAX: (312) 782-1684

USER NAME = USSJ696614	DESIGNED - KA	REVISED -	
	CHECKED - LAS	REVISED -	
PLOT SCALE = 8:0.0000 ':" / in.	DRAWN - KA	REVISED -	
PLOT DATE = 11/5/2025	CHECKED - LAS	REVISED -	

STATE OF ILLINOIS
DEPARTMENT OF TRANSPORTATION

EAST ABUTMENT FOUNDATION PLAN WB
STRUCTURE NUMBER 099-8309 WB AND 099-8325 EB

SHEET S-258 OF S-333 SHEETS

F.A.I RTE.	SECTION	COUNTY	TOTAL SHEETS	SHEET NO.
I-80	FAI 80 21 STRUCTURE 2	WILL	1230	839
		CONTRACT NO. 62R23		
		ILLINOIS	FED. AID PROJECT	

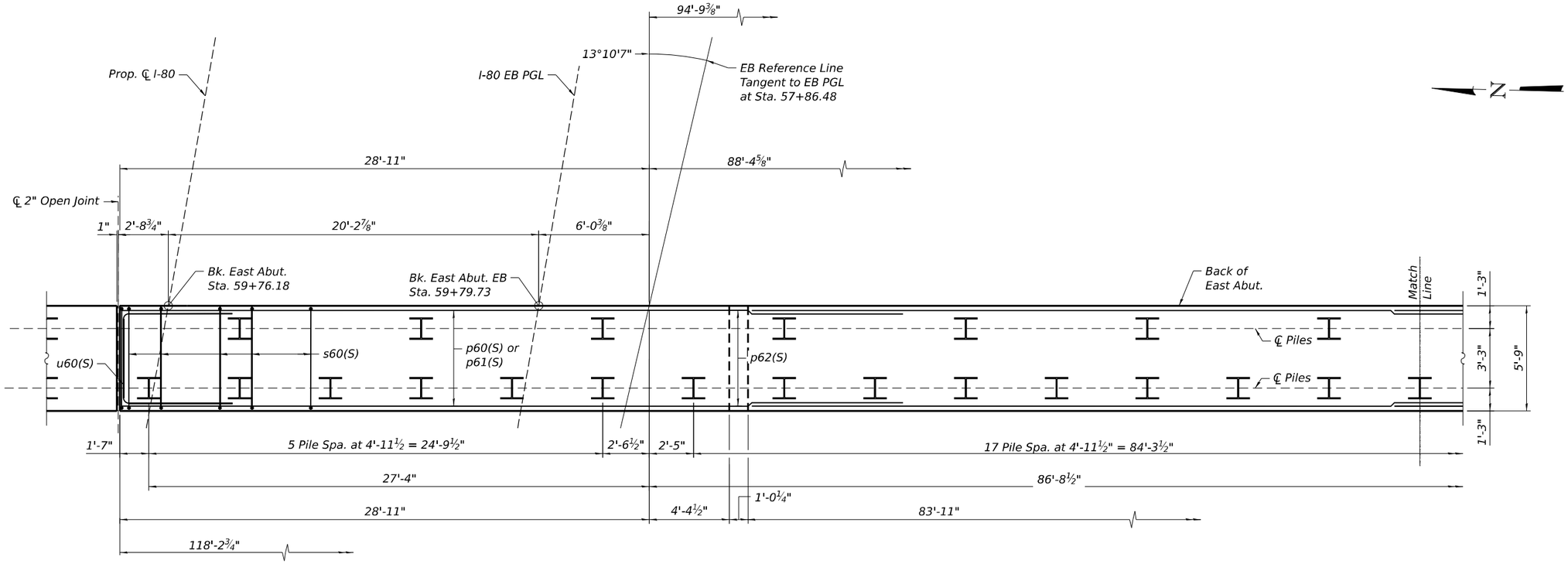

PILE CAP PLAN - EAST ABUTMENT EB

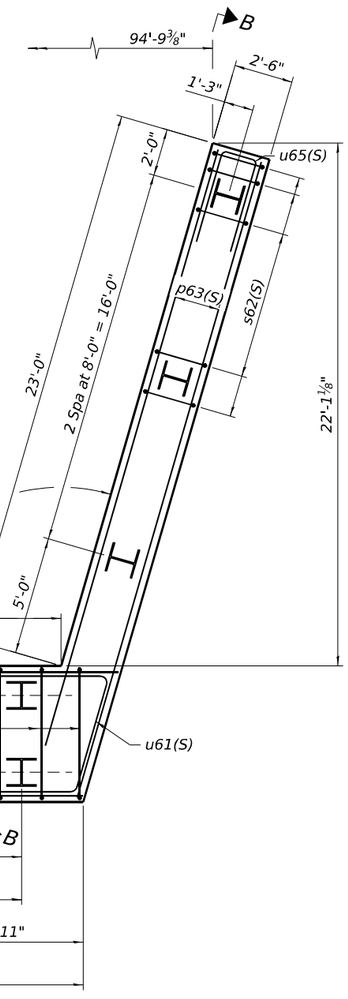

PILE CAP PLAN - EAST ABUTMENT EB

NOTES:

1. For Elevations and Sections, see Sheet S-261.
2. For Drainage Penetration details, see Sheet S-261.
3. For Section B-B, see Sheet S-263.
4. For additional notes, and Bill of Material, see Sheet S-264.

PILE DATA

Type: HP 14x89 with Pile Shoes
Nominal Required Bearing: 705 kip
Factored Resistance Available: 321 kip
Est. Length: 48ft
No. Production Piles: 38
No. Test Piles: 1

MODEL: Sheet
FILE NAME: pw://transystems-pw.bentley.com:transyscorp-pw1-hosted/Documents/Projects_2018/CH401/401180022/03-WSP/CAD/62R23-RB-1/Sheets/Structural/0998309-62R23-S762-48E04.dgn

WSP USA Inc.
30 N. LASALLE STREET
SUITE 4200
CHICAGO, IL 60602
TEL: (312) 782-8150
FAX: (312) 782-1684

USER NAME = USSJ696614	DESIGNED - KA	REVISED -	
	CHECKED - LAS	REVISED -	
PLOT SCALE = 8:0.0000 ':" / in.	DRAWN - KA	REVISED -	
PLOT DATE = 11/5/2025	CHECKED - LAS	REVISED -	

STATE OF ILLINOIS
DEPARTMENT OF TRANSPORTATION

EAST ABUTMENT FOUNDATION PLAN EB
STRUCTURE NUMBER 099-8309 WB AND 099-8325 EB

SHEET S-259 OF S-333 SHEETS

F.A.I RTE.	SECTION	COUNTY	TOTAL SHEETS	SHEET NO.
I-80	FAI 80 21 STRUCTURE 2	WILL	1230	840
		CONTRACT NO. 62R23		
	ILLINOIS	FED. AID PROJECT		

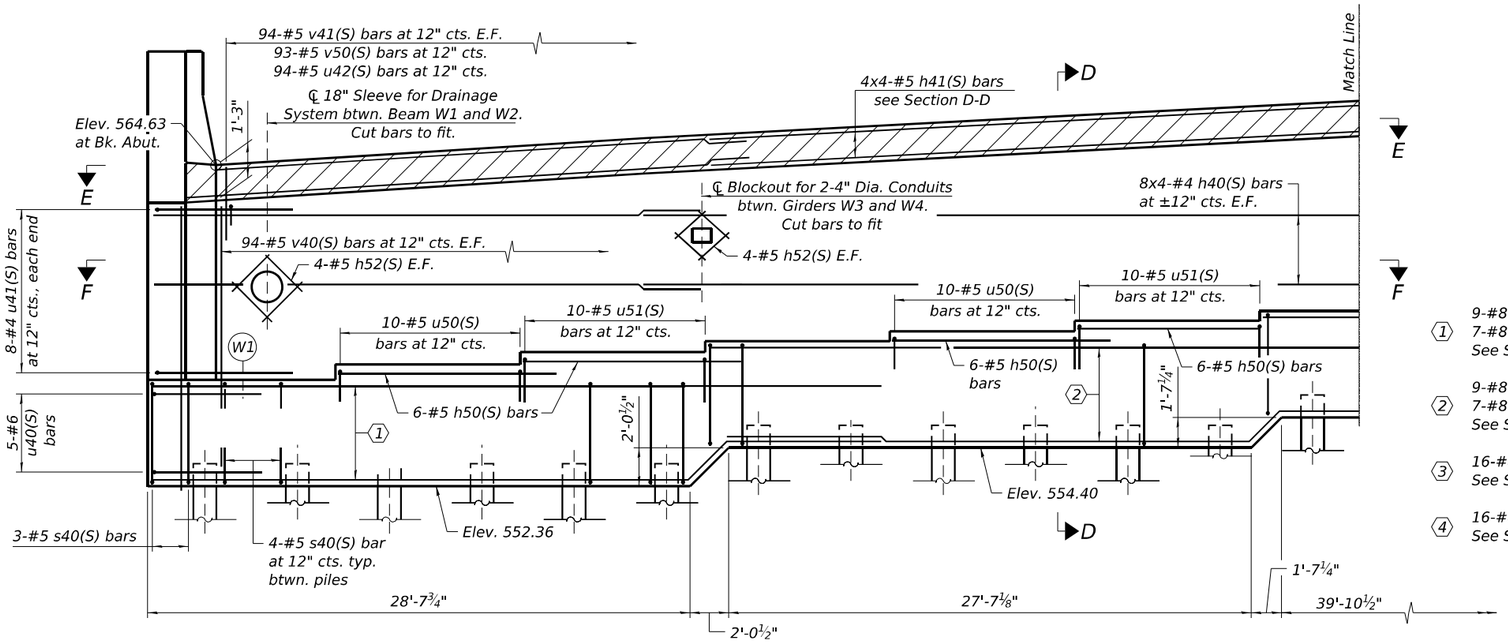

1. 9-#8 p40(S) bars top, 7-#8 p41(S) bars bot. See Section D-D
2. 9-#8 p42(S) bars top, 7-#8 p43(S) bars bot. See Section D-D
3. 16-#8 p44(S) bars See Section D-D
4. 16-#8 p45(S) bars See Section D-D

DEVELOPED ELEVATION - EAST ABUTMENT WB

(LOOKING EAST)

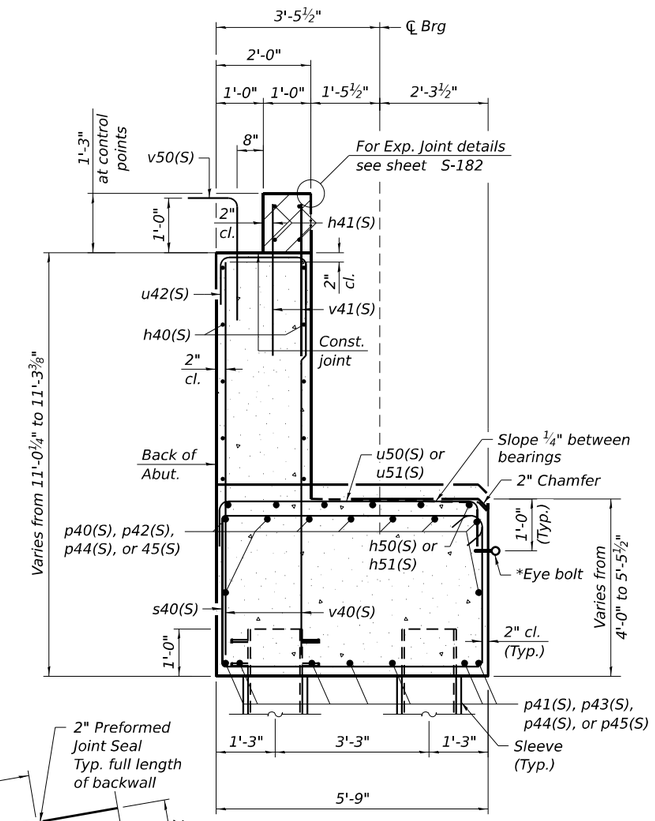

SECTION D-D

(At Rt. ∠'s)

*Stainless Steel Eye Bolt with Shoulder to Match Dia. of Ferrule Loop Insert spaced at 6'-0" max center. See sheet S-264 for details. Cost included with Concrete Structures

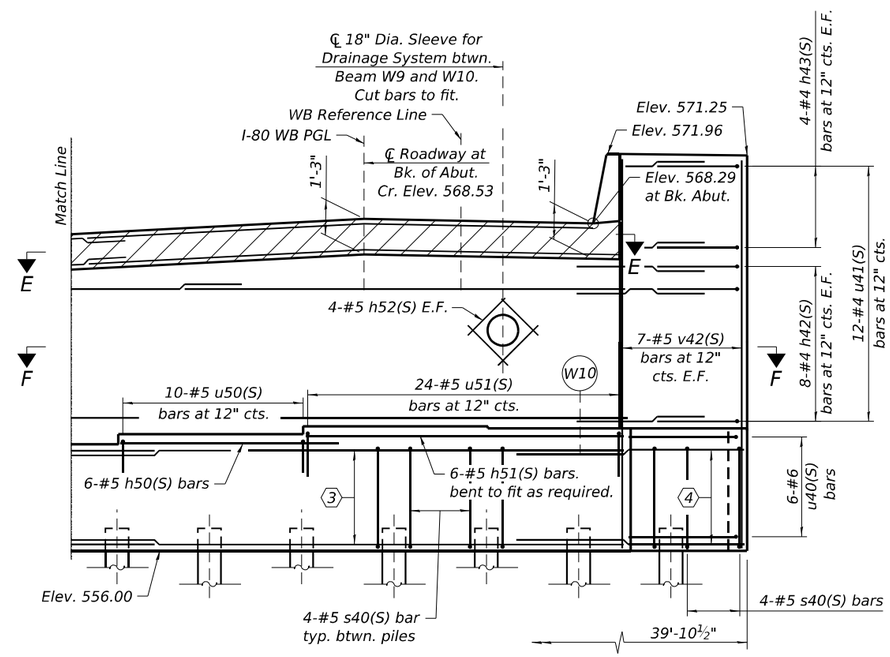

DEVELOPED ELEVATION - EAST ABUTMENT WB

(LOOKING EAST)

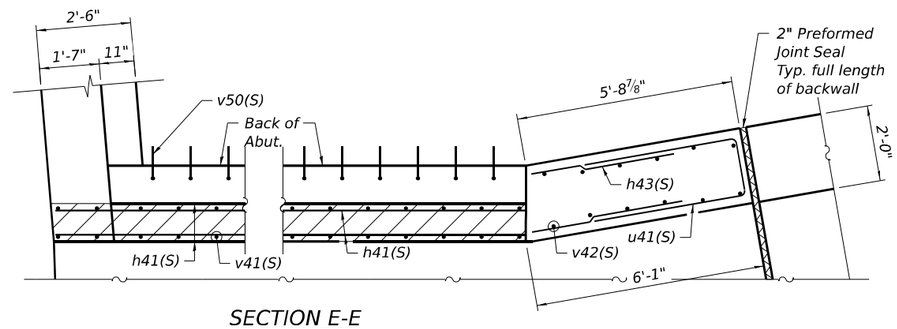

SECTION E-E

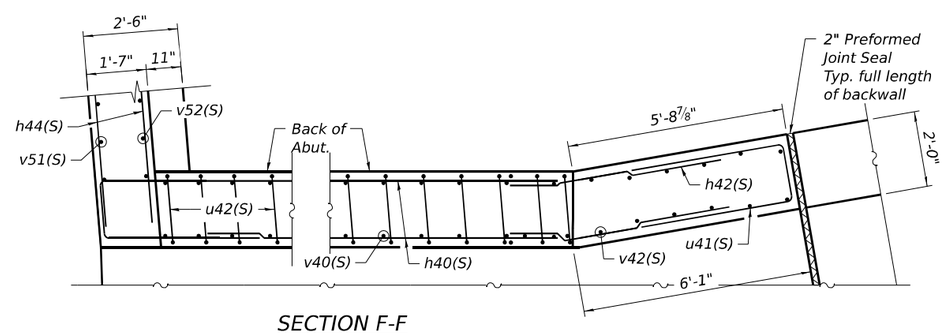

SECTION F-F

NOTES:

1. For Pile Cap Plan, see Sheet S-258.
2. For additional notes, and Bill of Material, see Sheet S-264.

MIN. BAR LAP

#4 bar - 2'-11"
#5 bar - 3'-7"
#8 bar - 8'-2"

BEARING SEAT ELEVATIONS

BEAM	BRG. SEAT ELEVATION	T (Inch)
W1	556.36	
W2	557.18	9⅞"
W3	557.82	7⅝"
W4	558.40	7"
W5	558.92	6¼"
W6	559.47	6⅝"
W7	560.00	6⅜"
W8	560.53	6⅜"
W9	560.96	5⅛"
W10	560.84	1½"

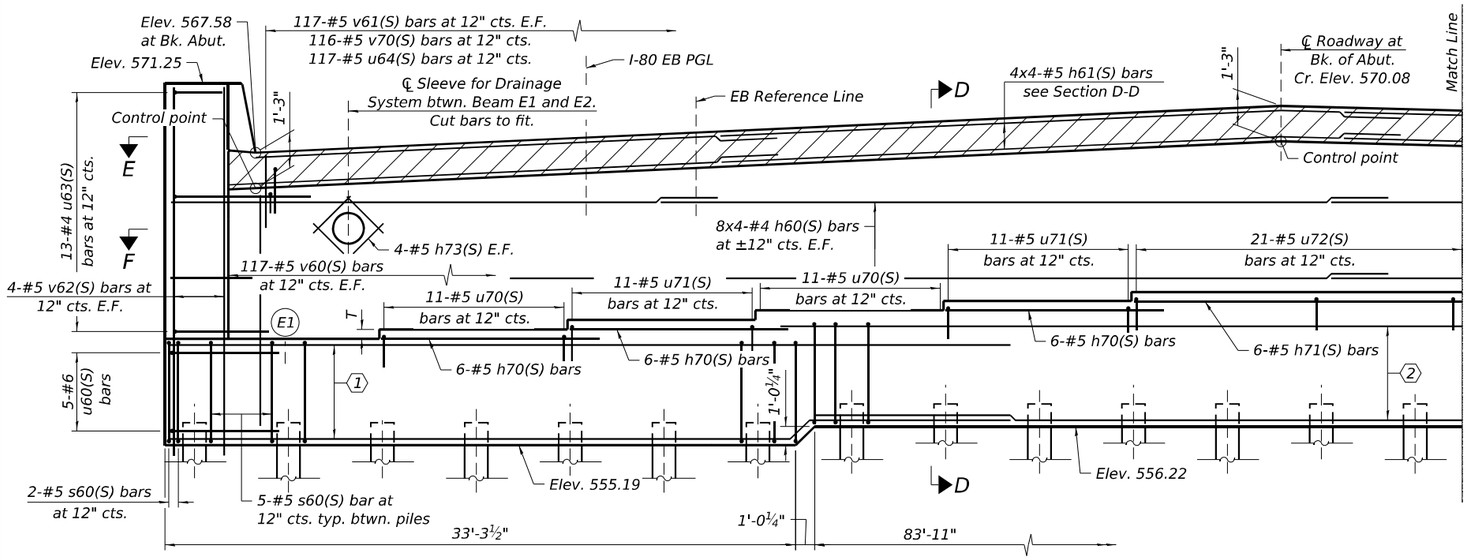

ELEVATION - EAST ABUTMENT EB
(LOOKING EAST)

1 8-#9 p60(S) bars top, 6-#9 p61(S) bars bot. See Section D-D

2 14x3-#9 p62(S) bars See Section D-D

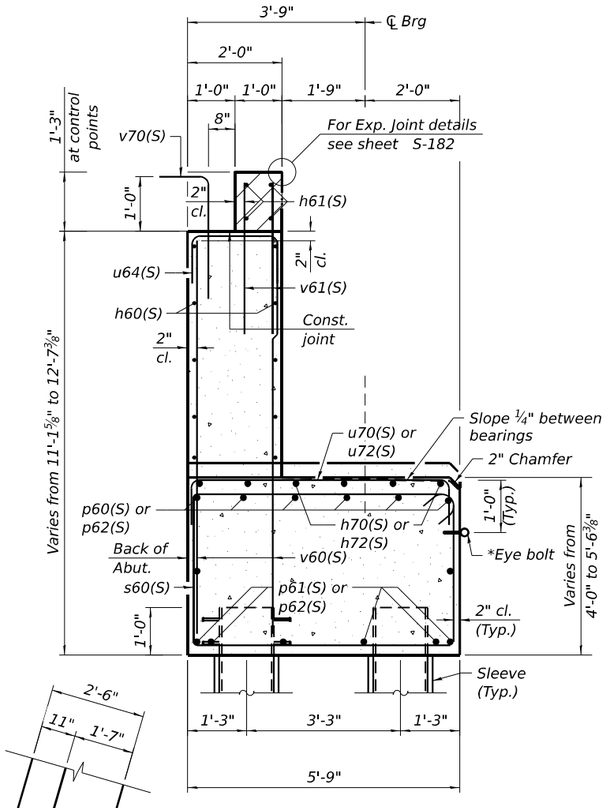

MIN. BAR LAP
#4 bar - 2'-11"
#5 bar - 3'-7"
#9 bar - 10'-4"

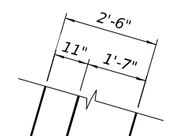

SECTION D-D
(At Rt. ∠'s)

*Stainless Steel Eye Bolt with Shoulder to Match Dia. of Ferrule Loop Insert spaced at 6'-0" max center. See sheet S-264 for details. Cost included with Concrete Structures

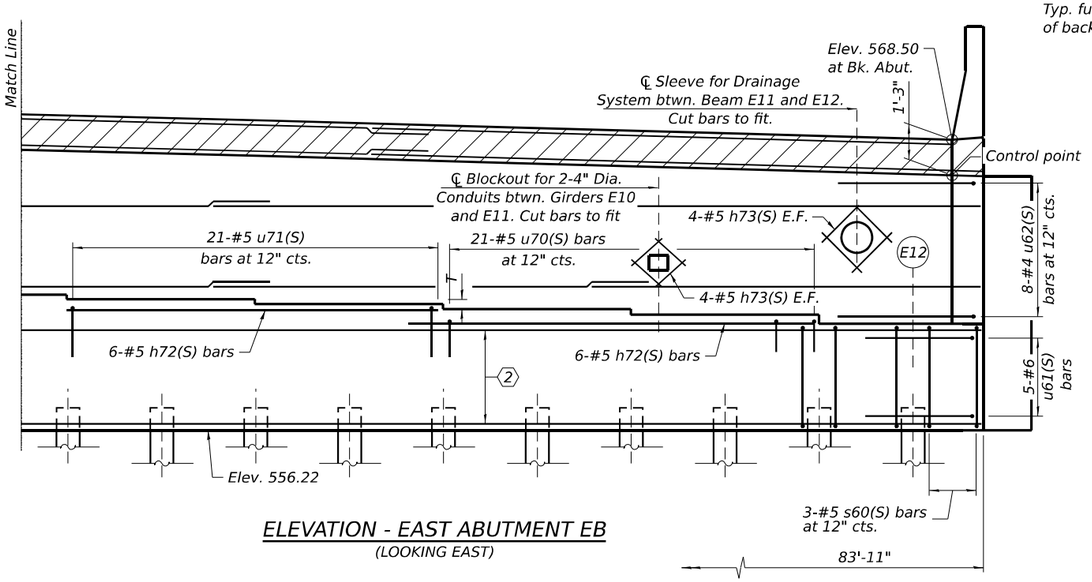

ELEVATION - EAST ABUTMENT EB
(LOOKING EAST)

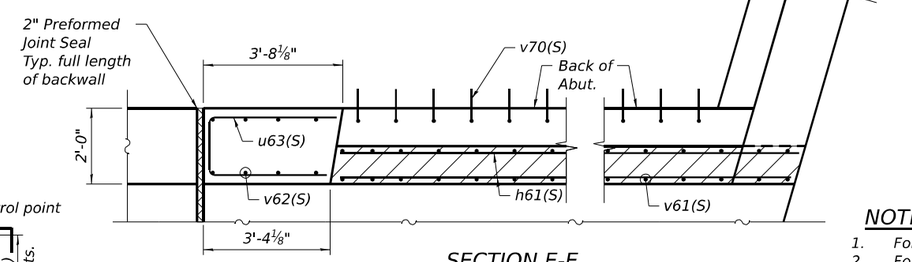

SECTION E-E

NOTES:
1. For Pile Cap Plan, see Sheet S-259.
2. For additional notes, and Bill of Material, see Sheet S-264.

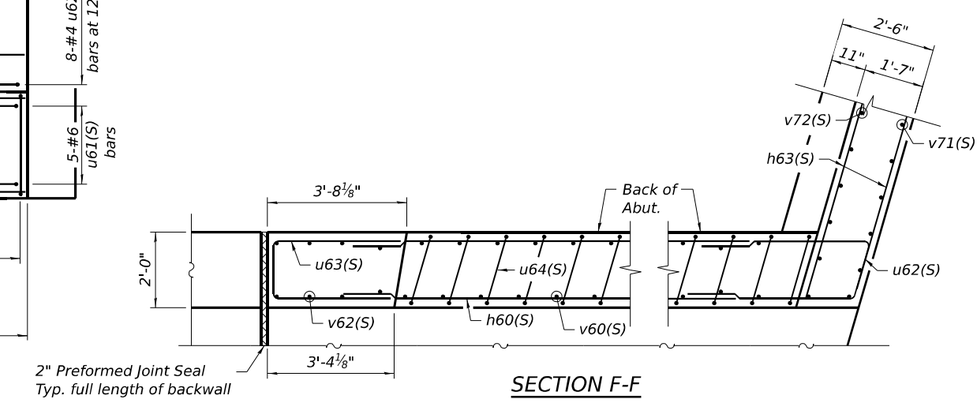

SECTION F-F

BEARING SEAT ELEVATIONS

BEAM	BRG. SEAT ELEVATION	T (Inch)
E1	559.19	
E2	559.69	6"
E3	560.20	6⅛"
E4	560.68	5¾"
E5	561.19	6⅛"
E6	561.70	6⅛"
E7	561.70	0"
E8	561.52	2⅛"
E9	561.27	3"
E10	561.00	3¼"
E11	560.70	3⅝"
E12	560.22	5¾"

WSP USA Inc.
30 N. LASALLE STREET
SUITE 4200
CHICAGO, IL 60602
TEL: (312) 782-8150
FAX: (312) 782-1684

USER NAME = USSJ696614	DESIGNED - KA	REVISED -	
	CHECKED - LAS	REVISED -	
PLOT SCALE = 8:0.0000 ':" / in.	DRAWN - KA	REVISED -	
PLOT DATE = 11/5/2025	CHECKED - LAS	REVISED -	

STATE OF ILLINOIS
DEPARTMENT OF TRANSPORTATION

EAST ABUTMENT ELEVATION EB
STRUCTURE NUMBER 099-8309 WB AND 099-8325 EB

SHEET S-261 OF S-333 SHEETS

F.A.I RTE.	SECTION	COUNTY	TOTAL SHEETS	SHEET NO.
I-80	FAI 80 21 STRUCTURE 2	WILL	1230	842

CONTRACT NO. 62R23

ILLINOIS | FED. AID PROJECT

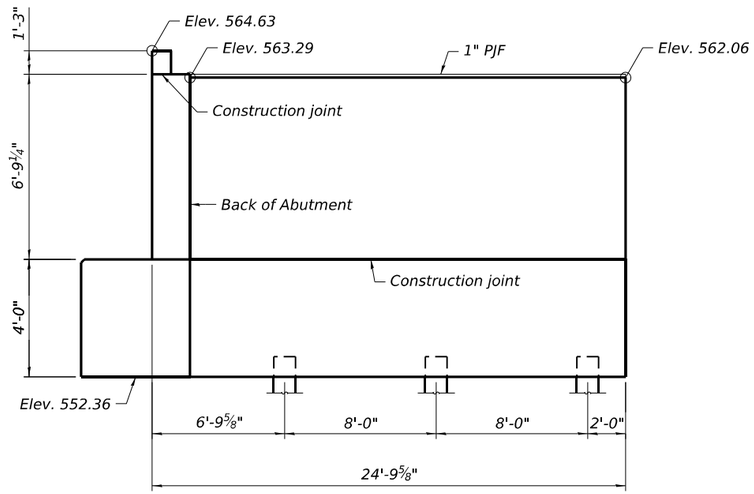

SECTION A-A
(WB North Wingwall)
(Showing Dimensions)

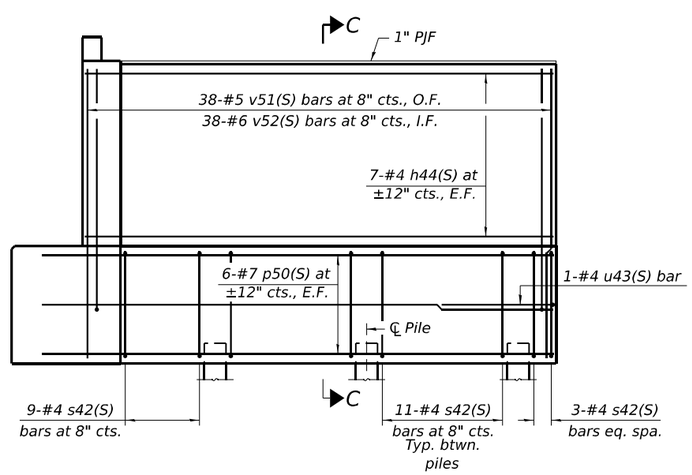

SECTION A-A
(WB North Wingwall)
(Showing Reinforcement)

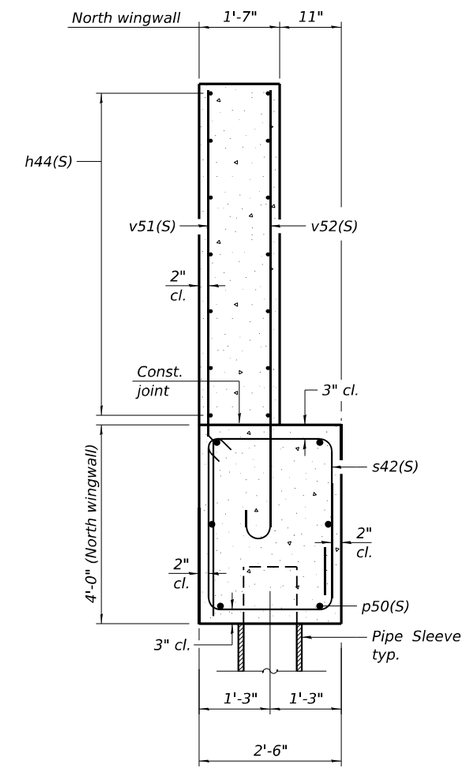

SECTION C-C
(At Rt. ∠'s)

NOTES:
1. For additional notes, and Bill of Material, see Sheet S-264.
2. For Section A-A, See Sheet S-258

MODEL: Sheet
FILE NAME: pw://transystems-pw.bentley.com:transyscorp-pw1-hosted/Documents/Projects_2018/CH401/401180022/03-WSP/CAD/62R23-RB-1/Sheets/Structural/0998309-62R23-S765-ABE07.dgn

WSP USA Inc.
30 N. LASALLE STREET
SUITE 4200
CHICAGO, IL 60602
TEL: (312) 782-8150
FAX: (312) 782-1684

USER NAME = USSJ696614	DESIGNED - KA	REVISED -	
	CHECKED - LAS	REVISED -	
PLOT SCALE = 8:0.0000 ':" / in.	DRAWN - KA	REVISED -	
PLOT DATE = 11/5/2025	CHECKED - LAS	REVISED -	

STATE OF ILLINOIS
DEPARTMENT OF TRANSPORTATION

EAST ABUTMENT WINGWALLS 1
STRUCTURE NUMBER 099-8309 WB AND 099-8325 EB

SHEET S-262 OF S-333 SHEETS

F.A.I RTE.	SECTION	COUNTY	TOTAL SHEETS	SHEET NO.
I-80	FAI 80 21 STRUCTURE 2	WILL	1230	843
		CONTRACT NO. 62R23		
		ILLINOIS	FED. AID PROJECT	

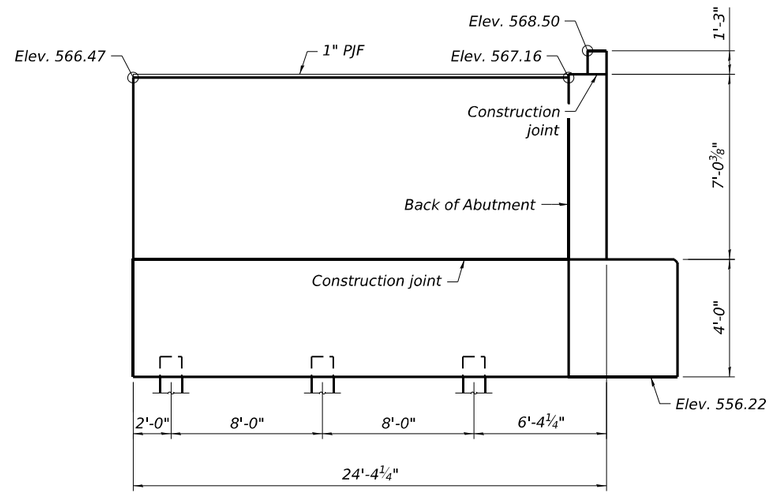

SECTION B-B
(EB South Wingwall)
(Showing Dimensions)

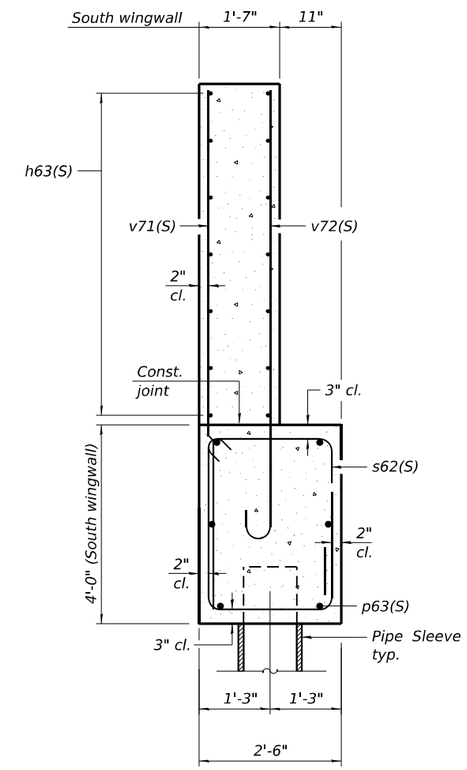

SECTION C-C
(At Rt. ∠'s)

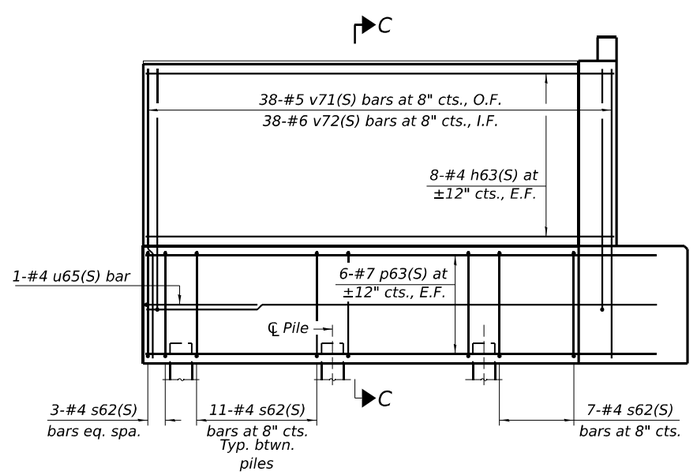

SECTION B-B
(EB South Wingwall)
(Showing Reinforcement)

NOTES:
1. For additional notes, and Bill of Material, see Sheet S-264.
2. For Section B-B, See Sheet S-259

MODEL: Sheet
FILE NAME: pw://transystems-pw.bentley.com:transyscorp-pw1-hosted/Documents/Projects_2018/CH401/401180022/03-WSP/CAD/62R23-RB-1/Sheets/Structural/0998309-62R23-S766-ABE08.dgn

WSP USA Inc.
30 N. LASALLE STREET
SUITE 4200
CHICAGO, IL 60602
TEL: (312) 782-8150
FAX: (312) 782-1684

USER NAME = USSJ696614	DESIGNED - KA	REVISED -	
	CHECKED - LAS	REVISED -	
PLOT SCALE = 8:0.0000 ':" / in.	DRAWN - KA	REVISED -	
PLOT DATE = 11/5/2025	CHECKED - LAS	REVISED -	

STATE OF ILLINOIS
DEPARTMENT OF TRANSPORTATION

EAST ABUTMENT WINGWALLS 2
STRUCTURE NUMBER 099-8309 WB AND 099-8325 EB

SHEET S-263 OF S-333 SHEETS

F.A.I RTE.	SECTION	COUNTY	TOTAL SHEETS	SHEET NO.
I-80	FAI 80 21 STRUCTURE 2	WILL	1230	844
		CONTRACT NO. 62R23		
		ILLINOIS	FED. AID PROJECT	

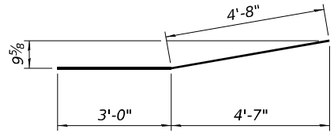

BAR h42(S)

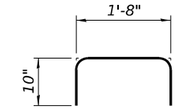

BARS u42(S) & u64(S)

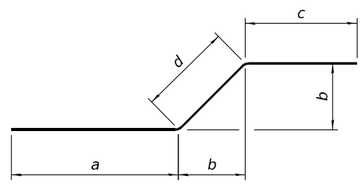

BARS p41(S), p43(S), and p61(S)

DIMENSION TABLE

BAR	a	b	c	d
p41(S)	28'-5"	2'-0½"	8'-2"	2'-11"
p43(S)	27'-7"	1'-7½"	8'-2"	2'-4"
p61(S)	33'-1"	1'-0"	10'-4"	1'-5"

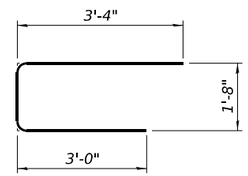

BAR u63(S)

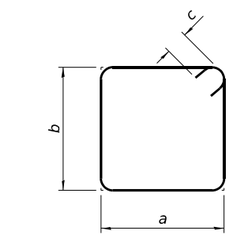

BARS s40(S), s42(S), s60(S), and s62(S)

DIMENSION TABLE

BAR	a	b	c
s40(S)	5'-5"	3'-8"	5½"
s42(S)	2'-2"	3'-6"	4½"
s60(S)	5'-5"	3'-8"	5½"
s62(S)	2'-2"	3'-6"	4½"

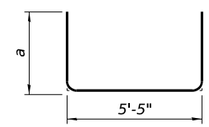

BARS u50(S), u51(S), u70(S), u71(S), and u72(S)

DIMENSION TABLE

BAR	a
u50(S)	1'-3"
u51(S)	2'-0"
u70(S)	1'-3"
u71(S)	1'-10"
u72(S)	2'-3"

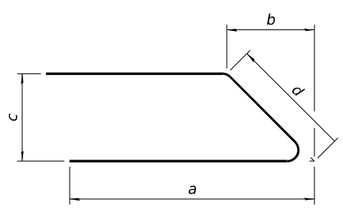

BARS u61(S) and u62(S)

DIMENSION TABLE

BAR	a	b	c	d
u61(S)	4'-4"	1"7"	5'-3"	5'-6"
u62(S)	4'-2"	6"	1'-8"	1'-9"

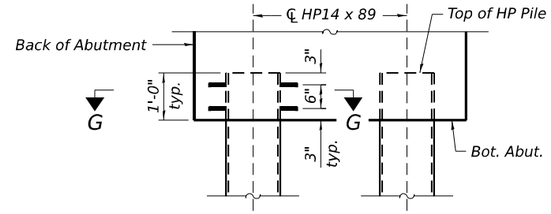

PILE STUD CONNECTOR DETAIL

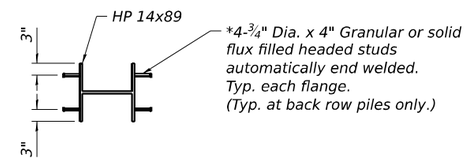

SECTION G-G

*Cost included with furnishing piles.

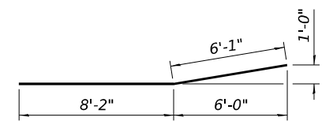

BAR p45(S)

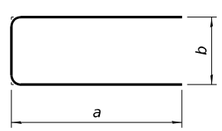

BARS u40(S), u41(S), u43(S) u60(S), and u65(S)

DIMENSION TABLE

BAR	a	b
u40(S)	4'-4"	5'-3"
u41(S)	4'-2"	1'-8"
u43(S)	2'-2"	2'-1"
u60(S)	4'-4"	5'-3"
u65(S)	2'-2"	2'-1"

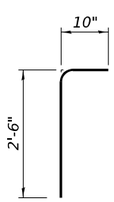

BAR v50(S) & v70(S)

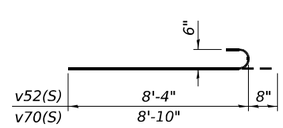

BAR v52(S) & v72(S)

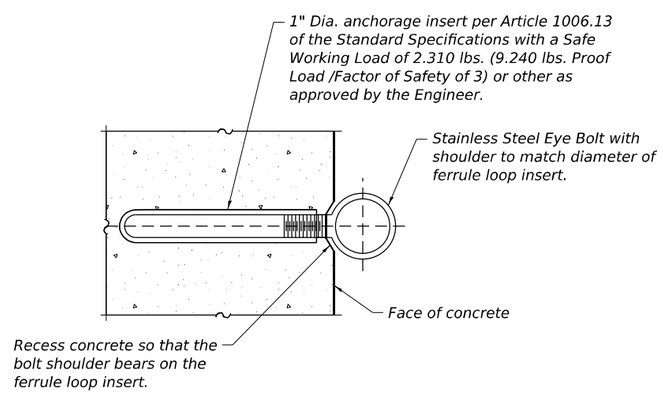

EYE BOLT DETAIL

(Cost included with Concrete Structures)

EAST ABUTMENT - WB BILL OF MATERIAL

Bar	No.	Size	Length	Shape
h40(S)	64	#4	25'-6"	
h41(S)	16	#5	25'-11"	
h42(S)	16	#4	7'-8"	
h43(S)	8	#4	4'-8"	
h44(S)	14	#4	24'-5"	
h50(S)	30	#5	11'-9"	
h51(S)	6	#5	23'-0"	
h52(S)	24	#5	4'-0"	
p40(S)	9	#8	38'-8"	
p41(S)	7	#8	39'-6"	
p42(S)	9	#8	37'-5"	
p43(S)	7	#8	38'-1"	
p44(S)	16	#8	33'-8"	
p45(S)	16	#8	14'-3"	
p50(S)	6	#7	28'-4"	
s40(S)	83	#5	19'-1"	
s42(S)	34	#4	12'-1"	
u40(S)	11	#6	13'-11"	
u41(S)	20	#4	10'-0"	
u42(S)	94	#5	3'-4"	
u43(S)	1	#4	6'-5"	
u50(S)	30	#5	7'-11"	
u51(S)	44	#5	9'-5"	
v40(S)	188	#5	10'-7"	
v41(S)	188	#5	2'-6"	
v42(S)	14	#5	15'-6"	
v50(S)	93	#5	3'-4"	
v51(S)	38	#5	9'-6"	
v52(S)	38	#6	9'-0"	
Concrete Structures			Cu. Yd.	184.2
Concrete Superstructure			Cu. Yd.	4.3
Reinforcement Bars, Stainless Steel			Pound	15,450
Furnishing Steel Piles HP14x89			Foot	1,584
Driving Piles			Foot	1,584
Test Pile Steel HP14x89			Each	1
Pile Shoes			Each	34
Concrete Sealer			Sq. Ft.	1,250

EAST ABUTMENT - EB BILL OF MATERIAL

Bar	No.	Size	Length	Shape
h60(S)	64	#4	32'-1"	
h61(S)	16	#5	31'-7"	
h63(S)	16	#4	24'-0"	
h70(S)	18	#5	11'-11"	
h71(S)	6	#5	19'-6"	
h72(S)	12	#5	21'-10"	
h73(S)	24	#5	4'-0"	
p60(S)	8	#9	44'-5"	
p61(S)	6	#9	44'-10"	
p62(S)	42	#9	34'-10"	
p63(S)	6	#7	28'-4"	
s60(S)	120	#5	19'-1"	
s62(S)	32	#4	12'-1"	
u60(S)	5	#6	13'-11"	
u61(S)	5	#6	14'-2"	
u62(S)	8	#4	10'-1"	
u63(S)	13	#4	8'-0"	
u64(S)	117	#5	3'-4"	
u65(S)	1	#4	6'-5"	
u70(S)	43	#5	7'-11"	
u71(S)	43	#5	9'-1"	
u72(S)	21	#5	9'-11"	
v60(S)	234	#5	10'-10"	
v61(S)	234	#5	2'-6"	
v62(S)	8	#5	15'-8"	
v70(S)	116	#5	3'-4"	
v71(S)	38	#5	9'-10"	
v72(S)	38	#6	9'-7"	
Concrete Structures			Cu. Yd.	206.7
Concrete Superstructure			Cu. Yd.	5.4
Reinforcement Bars, Stainless Steel			Pound	19,420
Furnishing Steel Piles HP14x89			Foot	1,824
Driving Piles			Foot	1,824
Test Pile Steel HP14x89			Each	1
Pile Shoes			Each	39
Concrete Sealer			Sq. Ft.	1,499

NOTES:

1. Hatched area to be poured separately after superstructure falsework has been removed and after approach slab side formwork has been removed.
2. Quantity of concrete in wingwall parapet and hatched area included with Concrete Superstructure.
3. Space reinforcement in cap to miss anchor bolts.
4. Pour steps monolithically with cap.
5. For details of piles see sheet S-316.
6. The top of back wall and approach slab seat shall have a constant slope determined from the control points shown.
7. Concrete Sealer shall be applied to the bearing seats and front faces of the hatched block, back wall, and abutment cap.

MINIMUM BAR LAP

#5 bar (Horiz.) = 3'-7"
#6 bar (Horiz.) = 4'-4"
#6 bar (Vert.) = 3'-10"
#9 bar (Horiz.) = 7'-1"
#10 bar (Vert.) = 10'-2"
#11 bar (Horiz.) = 9'-3"

* Alternate locations of laps Lt./Rt. within each row so that no two adjacent bars are lapped at the same location.

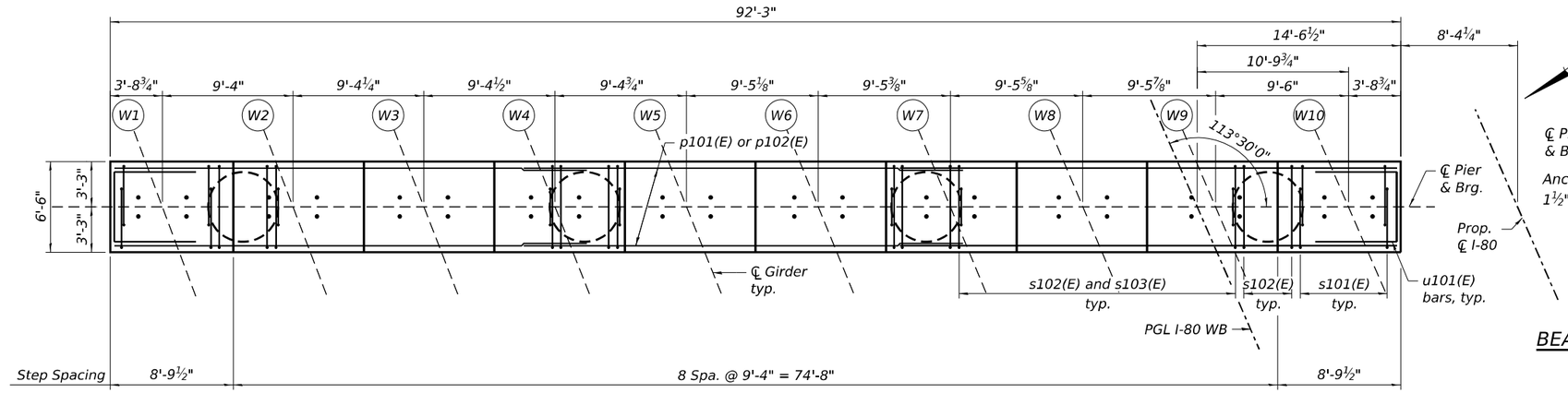

TOP PLAN

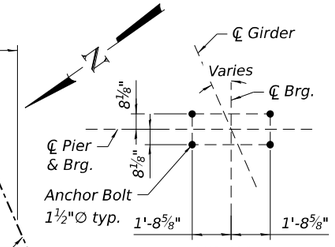

TYPICAL ANCHOR BOLT LAYOUT

BEARING SEAT ELEVATIONS

Bearings		
Girder	Elevation	Step Ht.
W1	591.40	
W2	591.51	1⅜"
W3	591.63	1⅜"
W4	591.74	1⅜"
W5	591.84	1⅛"
W6	591.90	¾"
W7	591.73	2"
W8	591.52	2⅝"
W9	591.28	2⅞"
W10	591.04	2⅞"

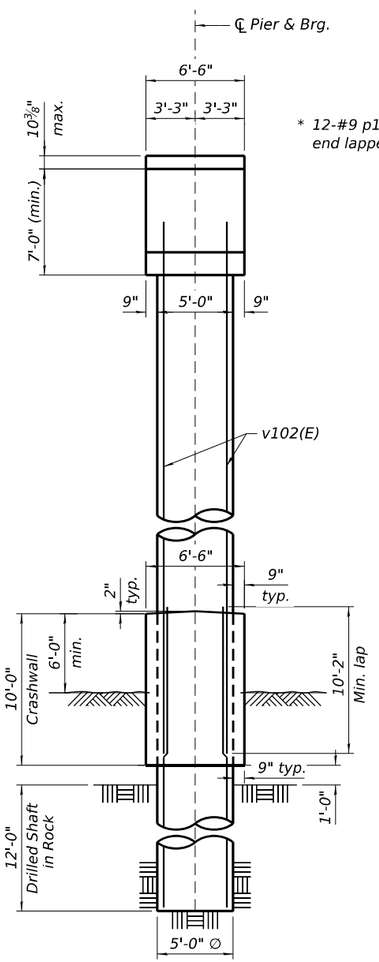

END VIEW

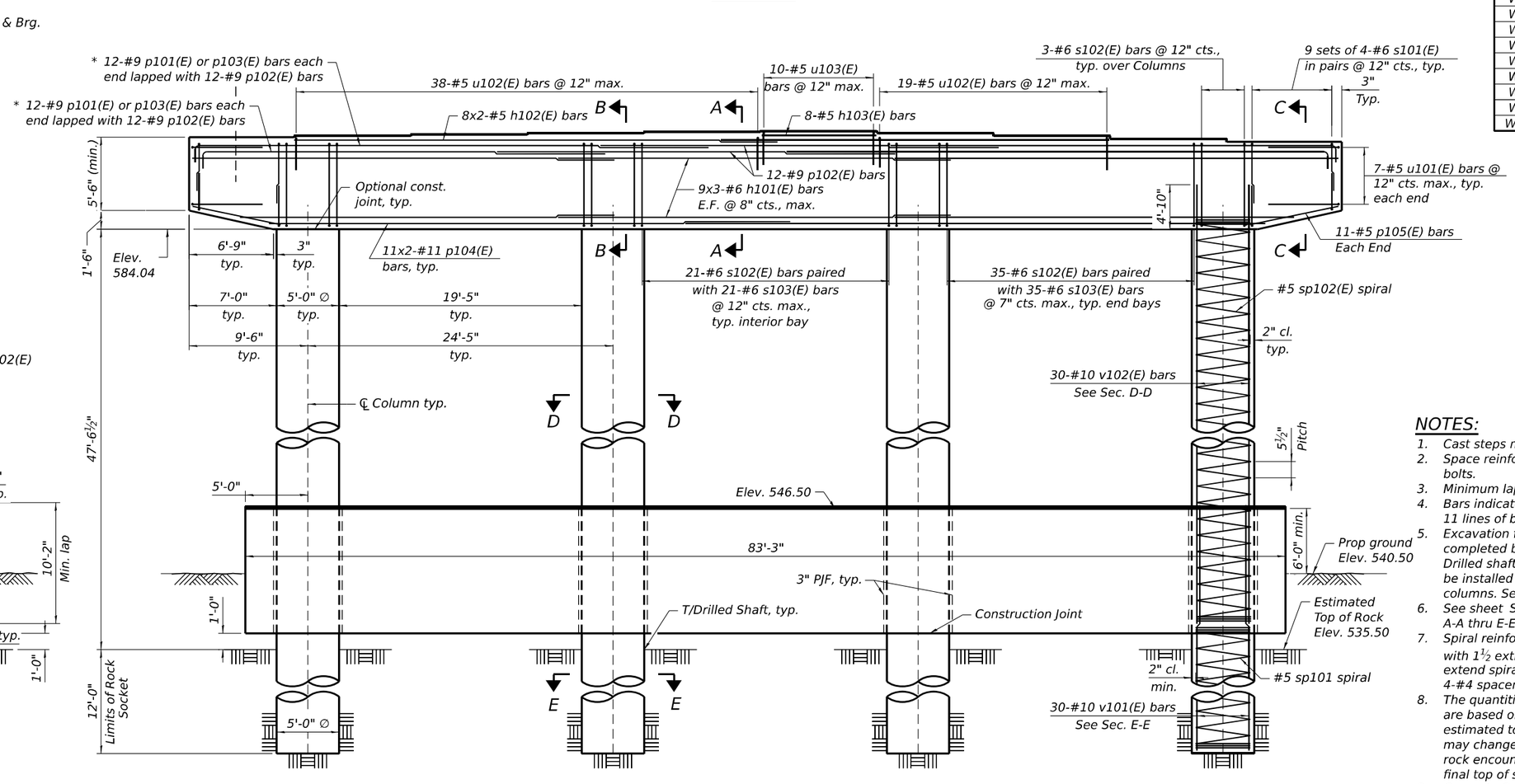

ELEVATION
(Looking East)

NOTES:

1. Cast steps monolithically with cap.
2. Space reinforcement in cap to miss anchor bolts.
3. Minimum lap for spirals = 3'-0".
4. Bars indicated thus 11x3-#5 etc. indicate 11 lines of bars with 3 segments per line.
5. Excavation for the Crashwall shall be completed before construction of the Drilled shafts and columns. Crashwall shall be installed after completion of the columns. See sheet S-269 for details.
6. See sheet S-266 for footing plan, Sections A-A thru E-E, and Bill of Material.
7. Spiral reinforcement shall be provided with 1½ extra turns at each end, and extend spiral 2" into pier cap. Provide min. 4-#4 spacers or equivalent.
8. The quantities and reinforcement detailing are based on the top of shaft and the estimated top of rock elevations shown and may change based on the actual top of rock encountered at each shaft and the final top of shaft elevation.
9. Concrete Sealer shall be applied to exposed surfaces of Pier cap, seats, columns and wall above grade.

WSP USA Inc.
30 N. LASALLE STREET
SUITE 4200
CHICAGO, IL 60602
TEL: (312) 782-8150
FAX: (312) 782-1684

USER NAME = USSJ696614	DESIGNED - FIM	REVISED -	
	CHECKED - PJL	REVISED -	
PLOT SCALE = 0:2 ':" / in.	DRAWN - GM	REVISED -	
PLOT DATE = 11/5/2025	CHECKED - FIM	REVISED -	

STATE OF ILLINOIS
DEPARTMENT OF TRANSPORTATION

PIER 1 WB
STRUCTURE NUMBER 099-8309 WB AND 099-8325 EB

SHEET S-265 OF S-333 SHEETS

F.A.I RTE.	SECTION	COUNTY	TOTAL SHEETS	SHEET NO.
I-80	FAI 80 21 STRUCTURE 2	WILL	1230	846
		CONTRACT NO. 62R23		
		ILLINOIS	FED. AID PROJECT	

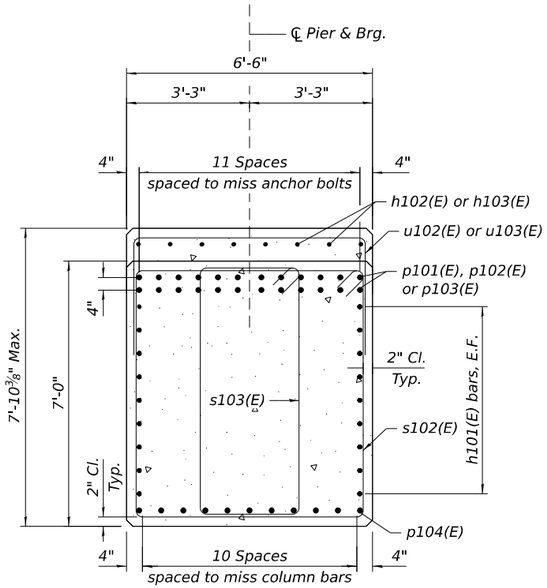

SECTION A-A

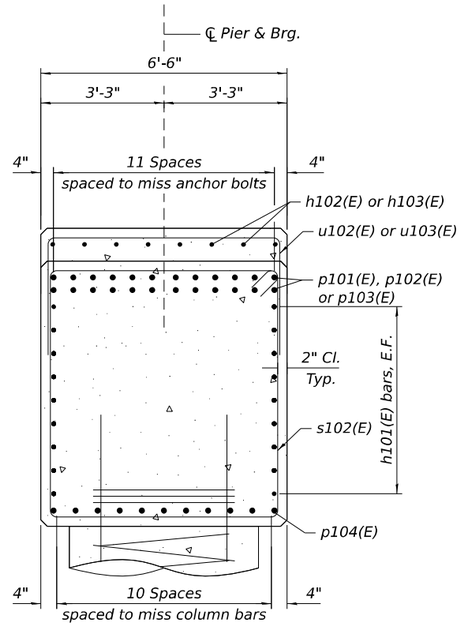

SECTION B-B

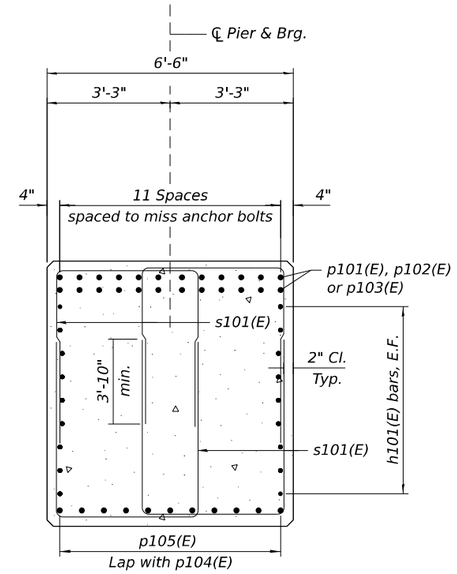

SECTION C-C

BILL OF MATERIAL - PIER 1 WB

	Bar	No.	Size	Length	Shape
	h101(E)	54	#6	33'-6"	
	h102(E)	16	#5	34'-4"	
	h103(E)	8	#5	9'-0"	
	h111(E)	52	#6	44'-0"	
	h112(E)	12	#6	18'-11"	
	h113(E)	12	#6	20'-3"	
	p101(E)	24	#9	30'-9"	
	p102(E)	24	#9	35'-8"	
	p103(E)	24	#9	42'-11"	
	p104(E)	22	#11	43'-9"	
	p105(E)	22	#5	10'-5"	
	s101(E)	72	#6	14'-4"	
	s102(E)	103	#6	27'-0"	
	s103(E)	91	#6	20'-0"	
	s111(E)	138	#7	20'-4"	
	s112(E)	32	#7	11'-9"	
**	sp101	4	#5	12'-8"	
**	sp102(E)	4	#5	47'-6"	
	u101(E)	14	#5	13'-2"	
	u102(E)	10	#5	9'-2"	
	u103(E)	57	#5	9'-10"	
	u111(E)	16	#6	11'-5"	
	u112(E)	28	#6	14'-8"	
	v101(E)	120	#10	22'-4"	
	v102(E)	120	#10	47'-4"	
	v103(E)	32	#7	9'-5"	
	Structure Excavation			Cu. Yd.	170
	Concrete Structures			Cu. Yd.	506.0
	Reinforcement Bars			Pound	1,870
	Reinforcement Bars, Epoxy Coated			Pound	81,020
	Drilled Shaft in Rock			Cu. Yd.	34.9
	Concrete Sealer			Sq. Ft.	3,866
	Crosshole Sonic Logging Access Ducts			Foot	48
	Crosshole Sonic Logging Testing			Each	4
	Thermal Integrity Profile Testing			Each	4
	Thermal Integrity Profile Data Collection			Foot	48

** Length is height of spiral.

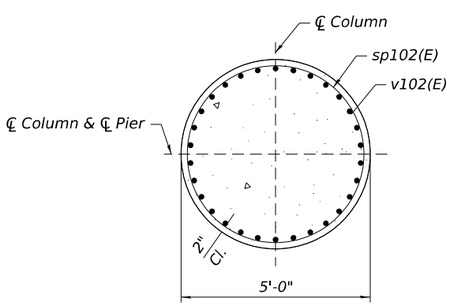

SECTION D-D

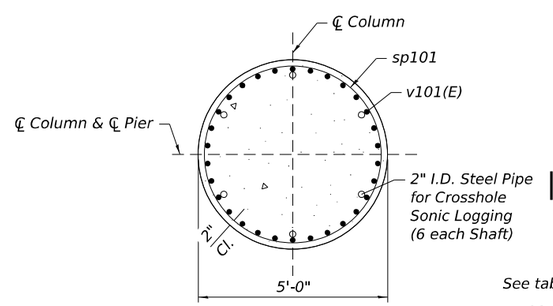

SECTION E-E

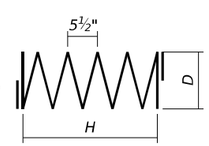

SPIRALS

See table for H and D dimensions

H & D DIMENSIONS

Bar	H	D
sp101	12'-8"	4'-8"
sp102(E)	47'-6"	4'-8"

A & B DIMENSIONS

Bar	A	B
s101(E)	5'-3"	3'-10"
u101(E)	3'-7"	6'-0"
u102(E)	1'-6"	6'-2"
u103(E)	1'-10"	6'-2"

C & D DIMENSIONS

Bar	C	D
p101(E)	29'-2"	1'-7"
p103(E)	41'-4"	1'-7"

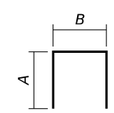

BARS s101(E), u101(E), u102(E) & u103(E)

See table for A and B dimensions

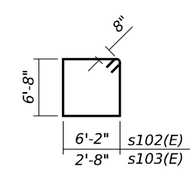

BARS s102(E) & s103(E)

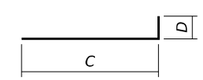

BARS p101(E) & p103(E)

See table for C and D dimensions

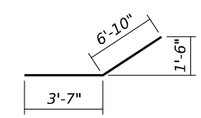

BAR p104(E)

MINIMUM BAR LAP

#5 bar (Horiz.) = 3'-7"
#6 bar (Horiz.) = 4'-4"
#6 bar (Vert.) = 3'-10"
#9 bar (Vert.) = 9'-2"
#10 bar (Horiz.) = 8'-9"

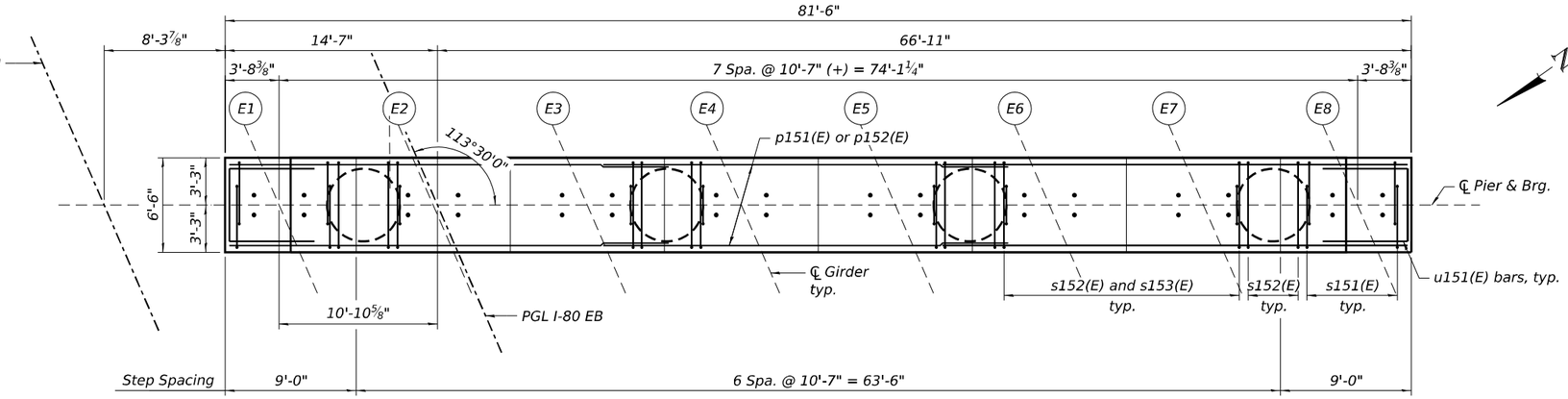

TOP PLAN

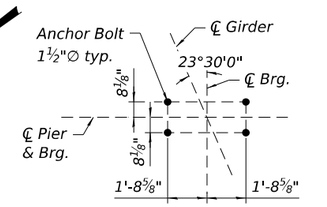

TYPICAL ANCHOR BOLT LAYOUT

BEARING SEAT ELEVATIONS

Bearings		
Girder	Elevation	Step Ht.
E1	590.79	
		1⅜"
E2	590.91	
		1⅜"
E3	591.03	
		1"
E4	591.11	
		⅞"
E5	591.04	
		2⅞"
E6	590.80	
		3¼"
E7	590.53	
		3¼"
E8	590.25	

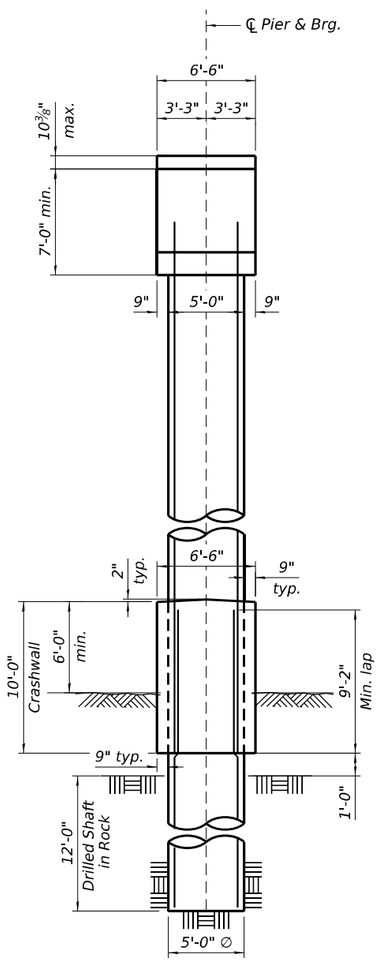

END VIEW

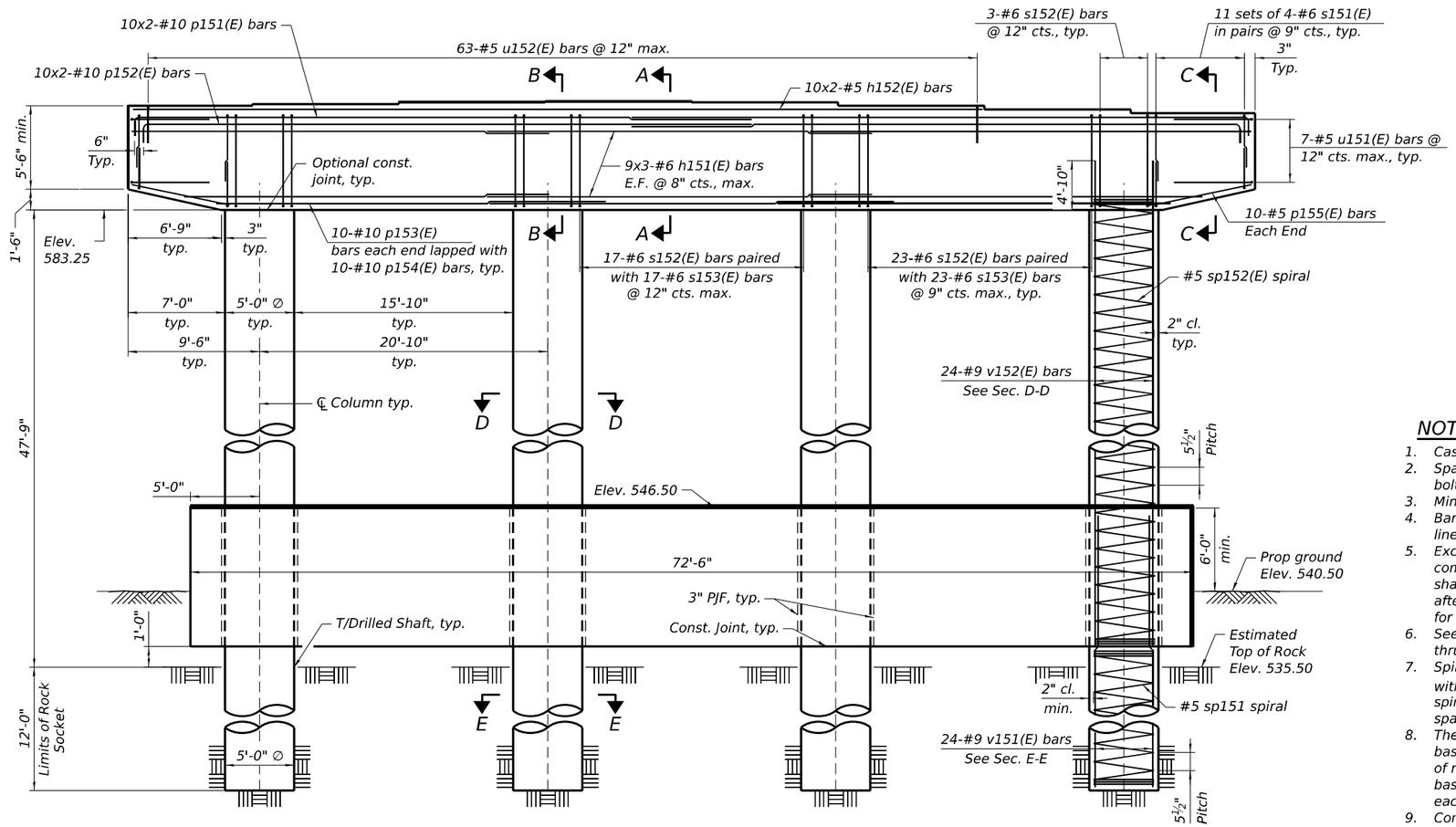

ELEVATION
(Looking East)

NOTES:

1. Cast steps monolithically with cap.
2. Space reinforcement in cap to miss anchor bolts.
3. Minimum lap for spirals = 3'-0".
4. Bars indicated thus 11x3-#5 etc. indicate 11 lines of bars with 3 segments per line.
5. Excavation for the Crashwall shall be completed before construction of the Drilled shafts and columns. Crashwall shall be installed after completion of the columns. See sheet S-269 for details.
6. See sheet S-268 for footing plan, Sections A-A thru E-E, and Bill of Material.
7. Spiral reinforcement shall be provided with 1½ extra turns at each end, and extend spiral 2" into pier cap. Provide min. 4-#4 spacers or equivalent.
8. The quantities and reinforcement detailing are based on the top of shaft and the estimated top of rock elevations shown and may change based on the actual top of rock encountered at each shaft and the final top of shaft elevation.
9. Concrete Sealer shall be applied to exposed surfaces of Pier cap, seats, columns and wall above grade.

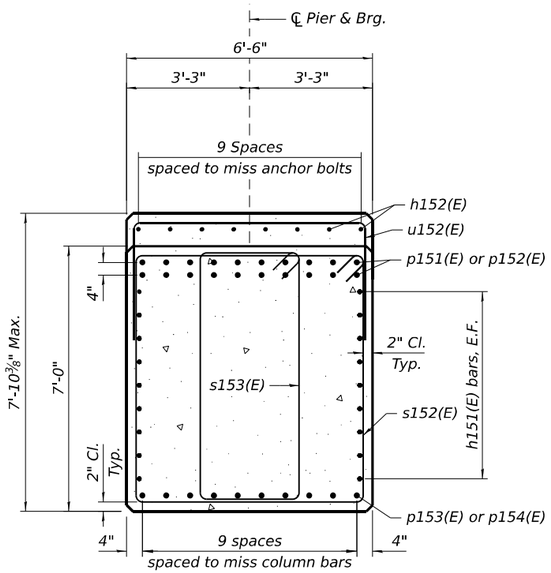

SECTION A-A

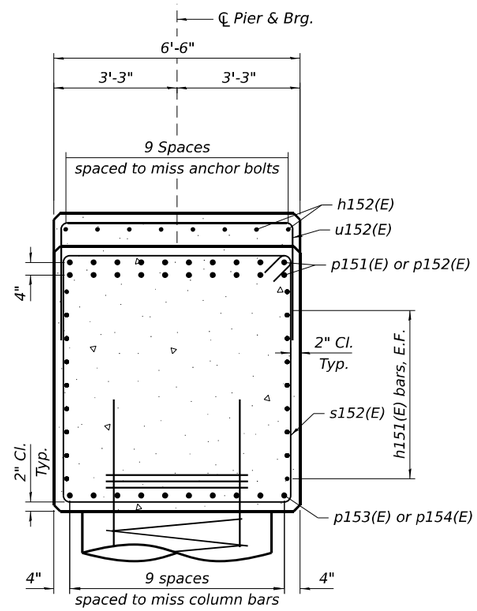

SECTION B-B

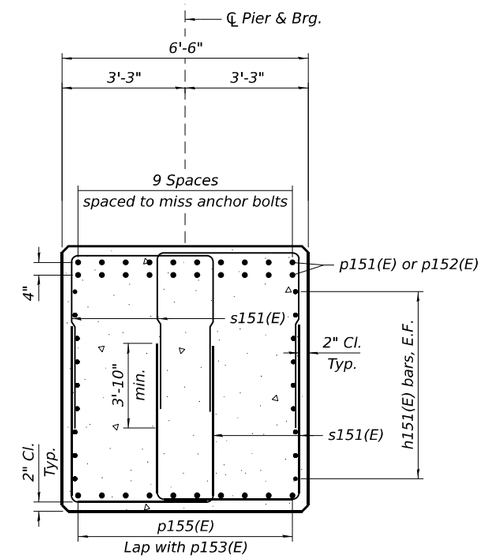

SECTION C-C

BILL OF MATERIAL - PIER 1 EB

	Bar	No.	Size	Length	Shape
	h151(E)	54	#6	30'-0"	
	h152(E)	20	#5	32'-7"	
	h161(E)	52	#6	38'-6"	
	h162(E)	12	#6	15'-3"	
	h163(E)	12	#6	16'-8"	
	p151(E)	20	#10	46'-10''	
	p152(E)	20	#10	45'-10''	
	p153(E)	20	#10	27'-5''	
	p154(E)	10	#10	28'-6''	
	p155(E)	20	#5	10'-5''	
	s151(E)	88	#6	14'-4''	
	s152(E)	75	#6	27'-0''	
	s153(E)	63	#6	20'-0''	
	s161(E)	114	#7	20'-4"	
	s162(E)	32	#7	11'-9"	
**	sp151	4	#5	13'-0''	
**	sp152(E)	4	#5	46'-11''	
	u151(E)	14	#5	13'-2''	
	u152(E)	63	#5	8'-0''	
	u161(E)	14	#6	11'-5"	
	u162(E)	22	#6	14'-8"	
	v151(E)	96	#9	22'-2''	
	v152(E)	96	#9	51'-7''	
	v153(E)	32	#7	9'-5"	
	Structure Excavation			Cu. Yd.	119
	Concrete Structures			Cu. Yd.	457.9
	Reinforcement Bars			Pound	1,920
	Reinforcement Bars, Epoxy Coated			Pound	65,390
	Drilled Shaft in Rock			Cu. Yd.	34.9
	Concrete Sealer			Sq. Ft.	3,713
	Crosshole Sonic Logging Access Ducts			Foot	48
	Crosshole Sonic Logging Testing			Each	4
	Thermal Integrity Profile Testing			Each	4
	Thermal Integrity Profile Data Collection			Foot	48

** Length is height of spiral.

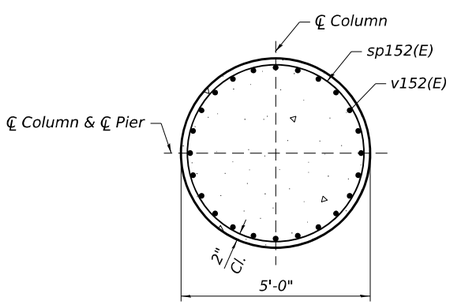

SECTION D-D

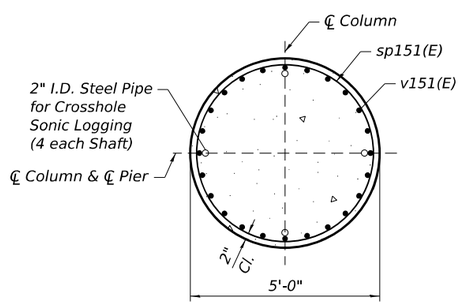

SECTION E-E

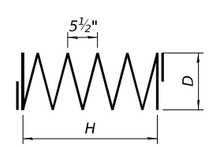

SPIRALS

See table for H and D dimensions

H & D DIMENSIONS

Bar	H	D
sp151	13'-0"	4'-8"
sp152(E)	46'-11"	4'-8"

A & B DIMENSIONS

Bar	A	B
s151(E)	5'-3"	3'-10"
u151(E)	3'-7"	6'-0"
u152(E)	11"	6'-2"

C & D DIMENSIONS

Bar	C	D
p151(E)	45'-0"	1'-10"
p152(E)	44'-0"	1'-10"

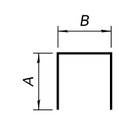

BARS s151(E), u151(E) & u152(E)

See table for A and B dimensions

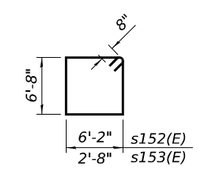

BARS s152(E) & s153(E)

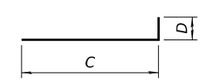

BARS p151(E) & p152(E)

See table for C and D dimensions

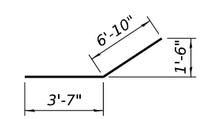

BAR p155(E)

MODEL: Default
FILE NAME: pw://transystems-pw.bentley.com:transyscorp-pw1-hosted/Documents/Projects_2018/CH401/401180022/03-WSP/CAD/62R23-RB-1/Sheets/Structural/0998309-62R23-S804-P1EB02.dgn

WSP USA Inc.
30 N. LASALLE STREET
SUITE 4200
CHICAGO, IL 60602
TEL: (312) 782-8150
FAX: (312) 782-1684

USER NAME = USSJ696614	DESIGNED - FIM	REVISED -	
	CHECKED - PJL	REVISED -	
PLOT SCALE = 0:2 ':" / in.	DRAWN - GM	REVISED -	
PLOT DATE = 11/5/2025	CHECKED - FIM	REVISED -	

STATE OF ILLINOIS
DEPARTMENT OF TRANSPORTATION

PIER 1 EB DETAILS
STRUCTURE NUMBER 099-8309 WB AND 099-8325 EB

SHEET S-268 OF S-333 SHEETS

F.A.I RTE.	SECTION	COUNTY	TOTAL SHEETS	SHEET NO.
I-80	FAI 80 21 STRUCTURE 2	WILL	1230	849
		CONTRACT NO. 62R23		
		ILLINOIS	FED. AID PROJECT	

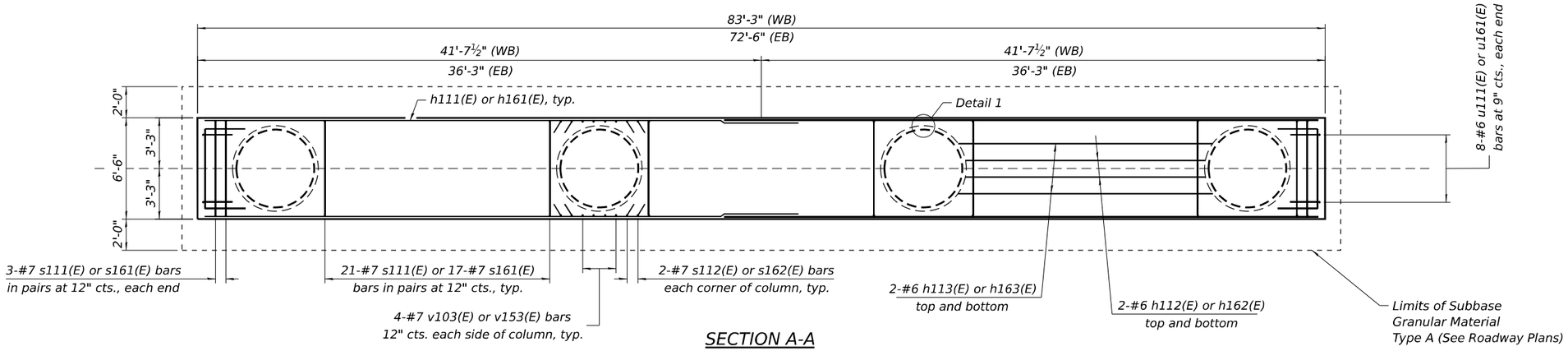

SECTION A-A

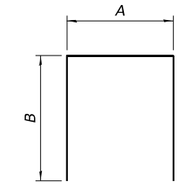

A & B DIMENSIONS

Bar	A	B
s111(E) & s161(E)	6'-2"	7'-1"
s112(E) & s162(E)	9'-5"	1'-2"
u111(E) & u161(E)	9'-5"	1'-0"
u112(E) & u162(E)	6'-0"	4'-4"

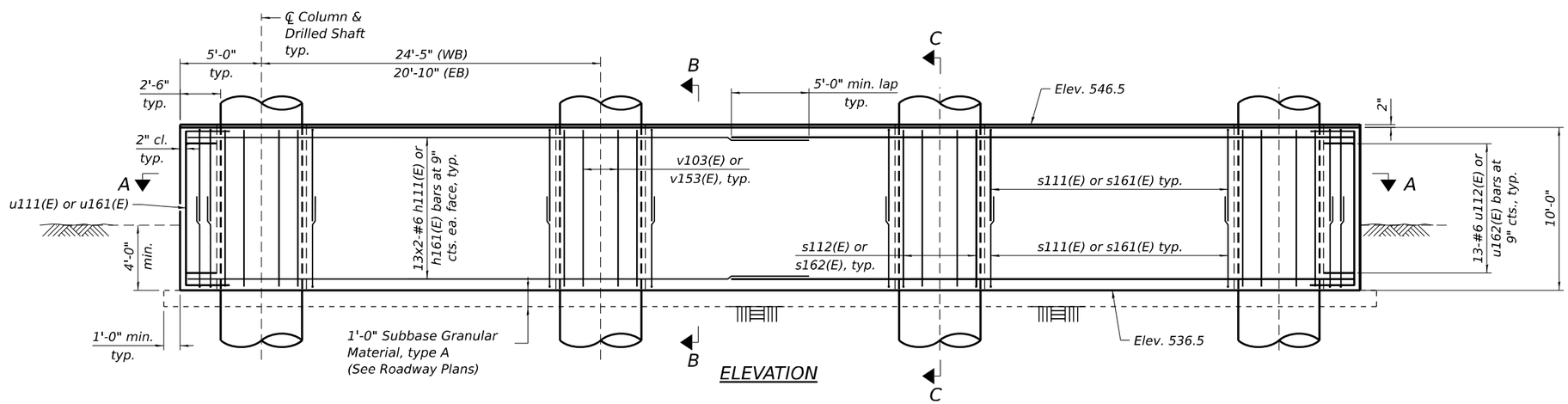

ELEVATION

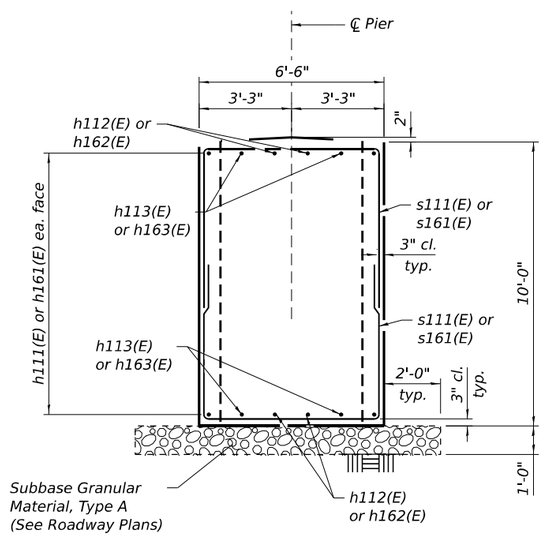

SECTION B-B

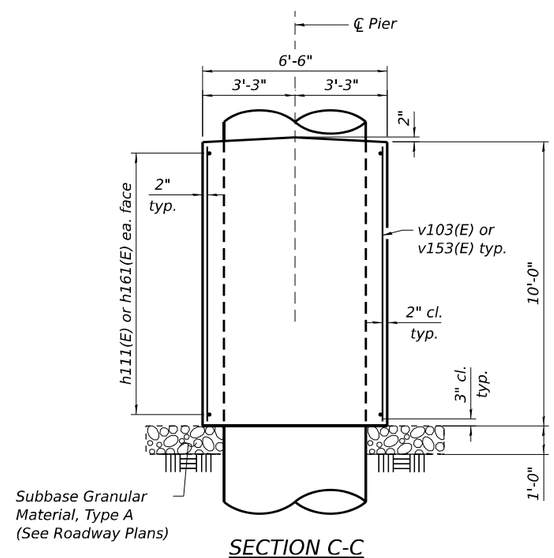

SECTION C-C

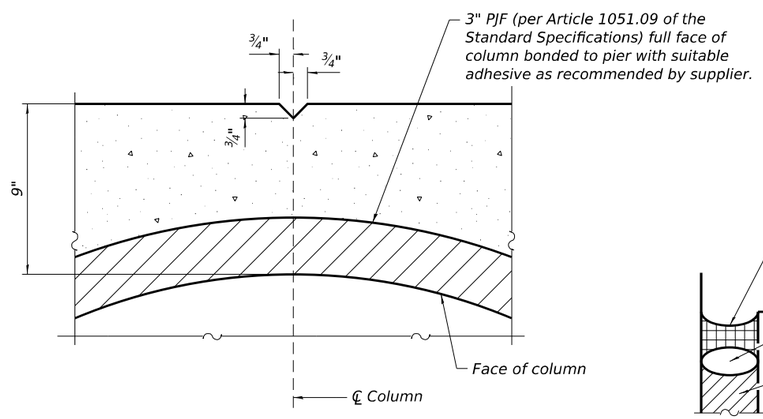

DETAIL 1

Reinforcement bars omitted for clarity

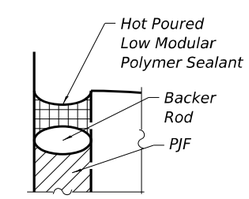

SEALANT DETAIL

Apply to top of crashwall.

MODEL: Default
FILE NAME: pw://transystems-pw.bentley.com:transyscorp-pw1-hosted/Documents/Projects_2018/C-H401/401180022/03-WSP/CAD/62R23-RB-1/Sheets/Structural/0998309-62R23-S805-PICW1.dgn

WSP USA Inc.
30 N. LASALLE STREET
SUITE 4200
CHICAGO, IL 60602
TEL: (312) 782-8150
FAX: (312) 782-1684

USER NAME = USSJ696614	DESIGNED - SJJ	REVISED -	
	CHECKED - PJL	REVISED -	
PLOT SCALE = 0:2 ':' / in.	DRAWN - SJJ	REVISED -	
PLOT DATE = 11/5/2025	CHECKED - PJL	REVISED -	

STATE OF ILLINOIS
DEPARTMENT OF TRANSPORTATION

PIER 1 CRASHWALL
STRUCTURE NUMBER 099-8309 WB AND 099-8325 EB

SHEET S-269 OF S-333 SHEETS

F.A.I RTE.	SECTION	COUNTY	TOTAL SHEETS	SHEET NO.
I-80	FAI 80 21 STRUCTURE 2	WILL	1230	850
		CONTRACT NO. 62R23		
		ILLINOIS	FED. AID PROJECT	

BEARING SEAT ELEVATIONS

West Bearings			East Bearings		
Girder	Elevation	Step Ht.	Girder	Elevation	Step Ht.
W1	594.15		W1	590.93	
		1 7/8"			2 1/4"
W2	594.31		W2	591.12	
		1 7/8"			2 1/4"
W3	594.46		W3	591.32	
		1 7/8"			1 7/8"
W4	594.62		W4	591.47	
		1 3/8"			0"
W5	594.73		W5	591.47	
		1 3/8"			1 7/8"
W6	594.85		W6	591.32	
		2 1/2"			2 1/4"
W7	594.64		W7	591.12	
		1 3/4"			2 1/4"
W8	594.49		W8	590.93	
		1 7/8"			
W9	594.34				
		1 7/8"			
W10	594.18				

* Girder Spacing
** Step Spacing

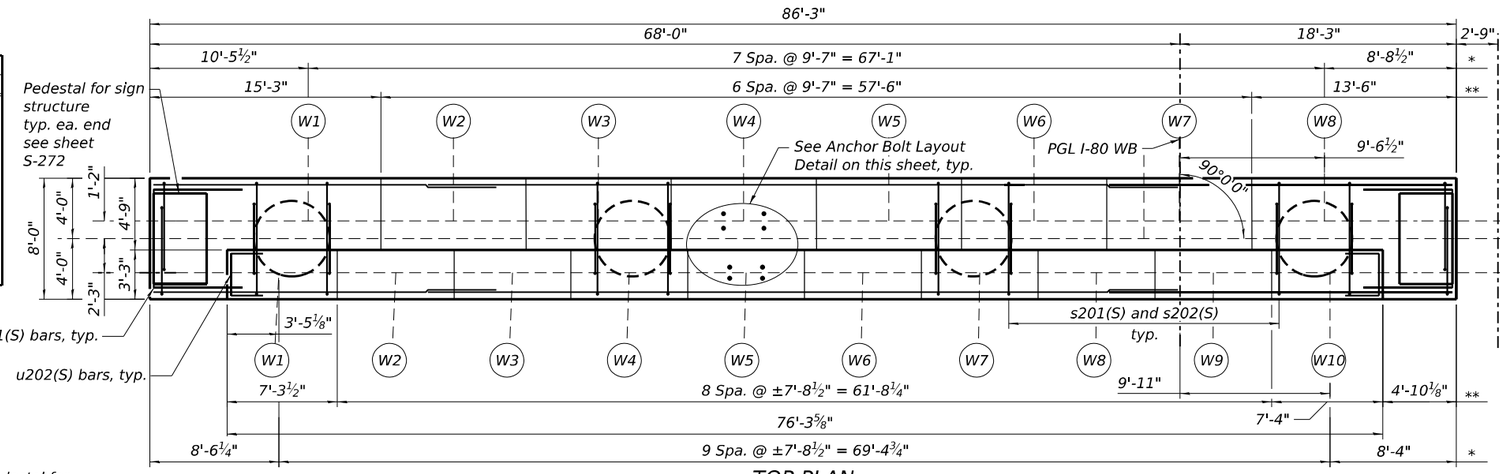

TOP PLAN
(Some bars omitted for clarity)

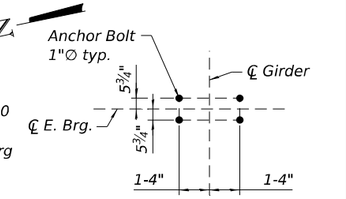

ANCHOR BOLT LAYOUT
(E. Brg.)

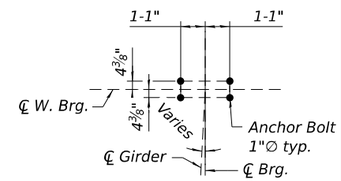

ANCHOR BOLT LAYOUT
(W. Brg.)

MINIMUM BAR LAP

#5 bar (Horiz.) = 3'-7"
#6 bar (Horiz.) = 4'-4"
#6 bar (Vert.) = 3'-10"
#7 bar (Horiz.) = 5'-0"
#8 bar (Vert.) = 5'-1"
#9 bar (Vert.) = 9'-2"

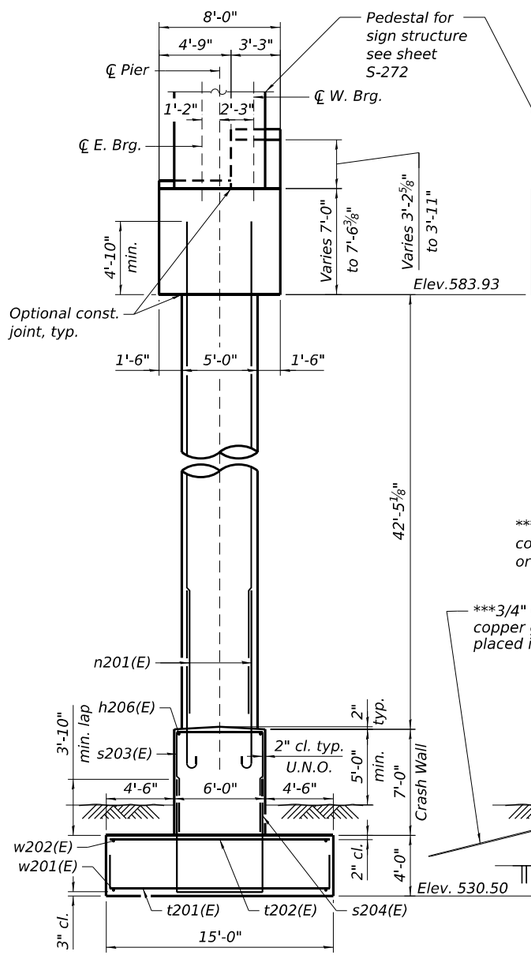

END VIEW
(The maximum applied service bearing pressure, Qmax = 12 ksf)

*** Cost of rod, cable and clamps included in the cost of Concrete Structures

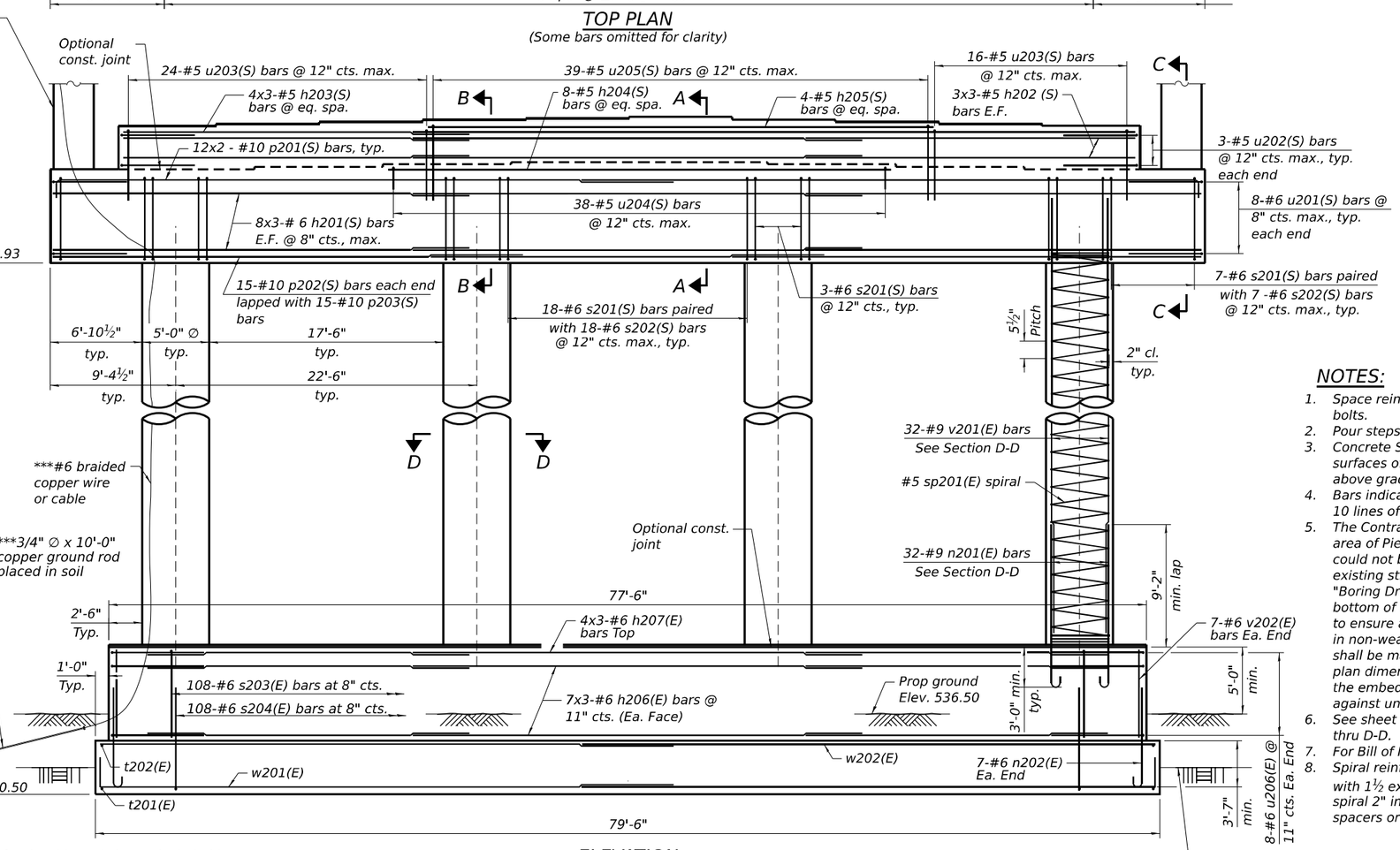

ELEVATION
(Looking East)

NOTES:

1. Space reinforcement in cap to miss anchor bolts.
2. Pour steps monolithically with cap.
3. Concrete Sealer shall be applied to exposed surfaces of Pier cap, seats, columns, and wall above grade.
4. Bars indicated thus 10 x 2 - #10 etc. indicate 10 lines of bars with 2 segments per line.
5. The Contractor shall perform soil borings in the area of Pier 2 WB footing where soil borings could not be drilled due to inaccessibility of an existing structure. See special provisions "Boring Drilling for Pier Foundations". The bottom of footing elevations shall be adjusted to ensure a minimum embedment of 36 inches in non-weathered rock. The rock excavation shall be made with near-vertical sides at the plan dimensions to allow the sides and base of the embedded portion of the footing to be cast against undisturbed rock surfaces.
6. See sheet S-271 for footing plan, Sections A-A thru D-D.
7. For Bill of Material see sheet S-272.
8. Spiral reinforcement shall be provided with 1½ extra turns at each end, and extend spiral 2" into pier cap. Provide min. 4-#4 spacers or equivalent.

WSP USA Inc.
30 N. LASALLE STREET
SUITE 4200
CHICAGO, IL 60602
TEL: (312) 782-8150
FAX: (312) 782-1684

USER NAME = USSJ696614	DESIGNED - KB	REVISED -	
	CHECKED - KA	REVISED -	
PLOT SCALE = 0:2.000 :" / in.	DRAWN - GM	REVISED -	
PLOT DATE = 11/5/2025	CHECKED - KB	REVISED -	

STATE OF ILLINOIS
DEPARTMENT OF TRANSPORTATION

PIER 2 WB
STRUCTURE NUMBER 099-8309 WB AND 099-8325 EB

SHEET S-270 OF S-333 SHEETS

F.A.I RTE.	SECTION	COUNTY	TOTAL SHEETS	SHEET NO.
I-80	FAI 80 21 STRUCTURE 2	WILL	1230	851
		CONTRACT NO. 62R23		
		ILLINOIS	FED. AID PROJECT	

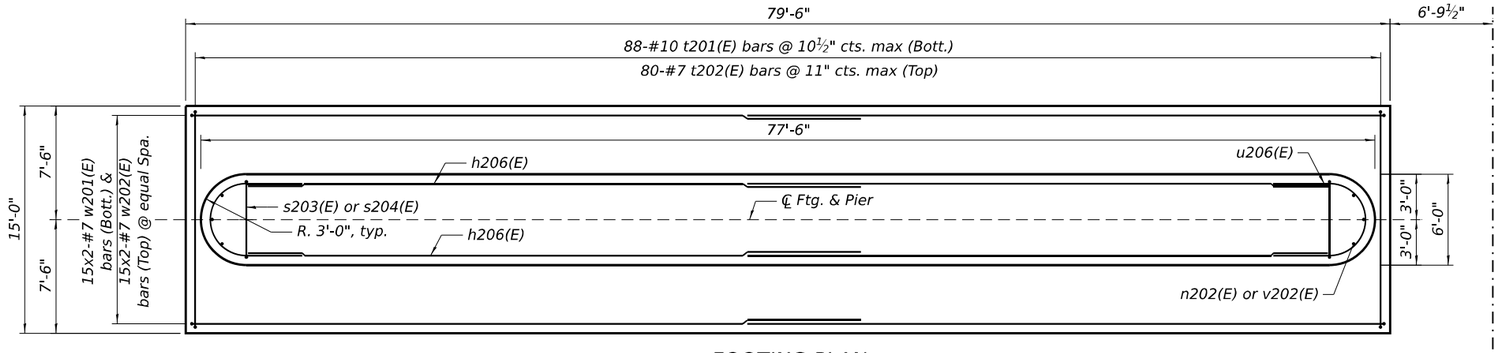

FOOTING PLAN

(Some bars omitted for clarity)

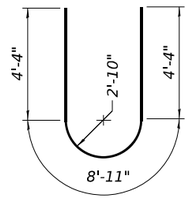

BARS u206(E)

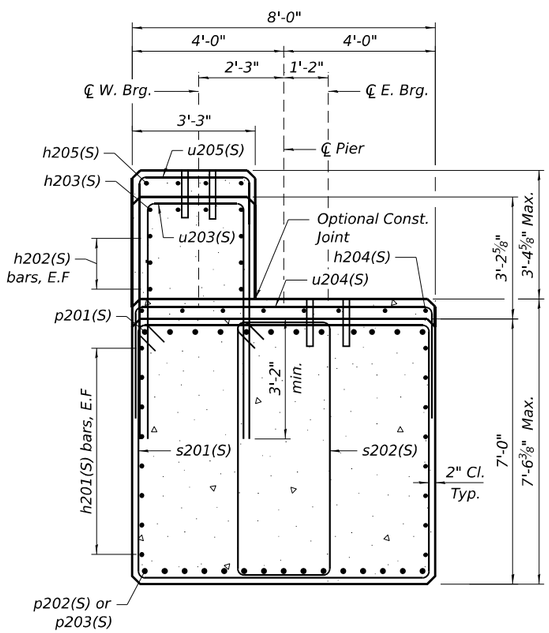

SECTION A-A

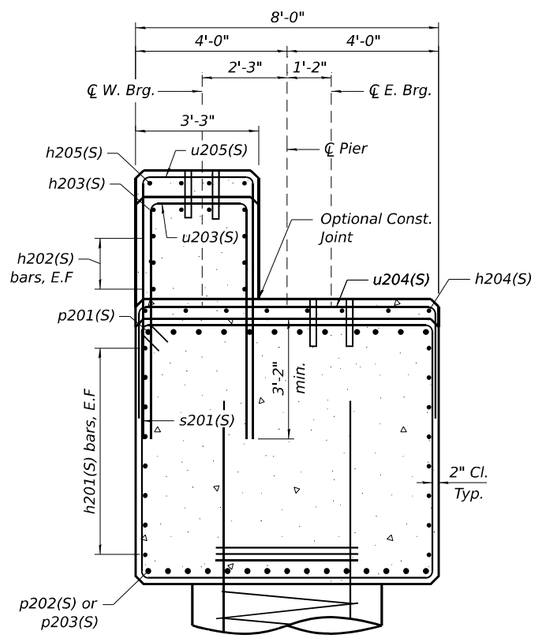

SECTION B-B

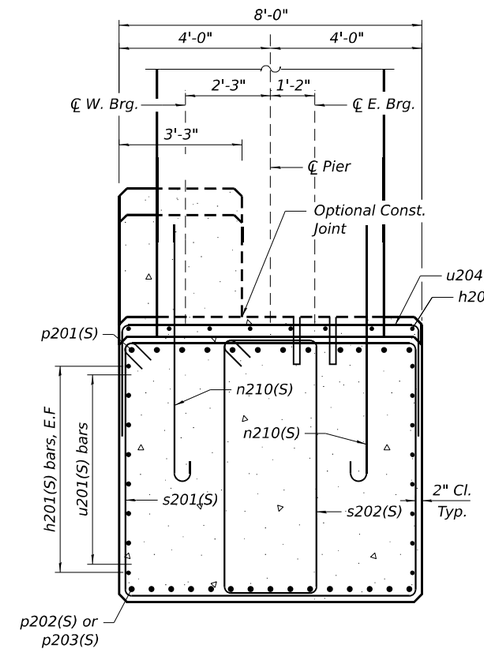

SECTION C-C

For pedestal bars, see sheet S-272

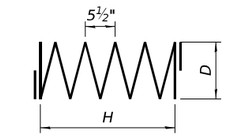

SPIRALS

H & D DIMENSIONS

Bar	H	D
sp201(E)	42'-7"	4'-8"

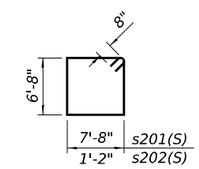

BARS s201(S) & s202(S)

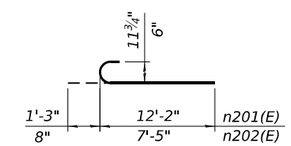

BARS n201(E) & n202(E)

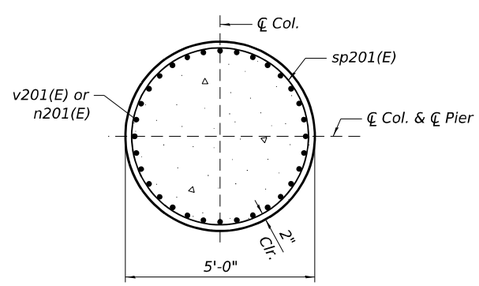

SECTION D-D

A & B DIMENSIONS

Bar	A	B
s203(E)	5'-8"	6'-8"
s204(E)	5'-8"	7'-7"
u201(S)	7'-6"	4'-4"
u202(S)	2'-9"	3'-7"
u203(S)	2'-11"	6'-3"
u204(S)	7'-8"	1'-6"
u205(S)	2'-11"	6'-9"
t201(E)	14'-8"	1'-10"

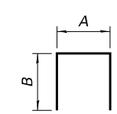

BARS s203(E), s204(E), t201(E), & u201(s) thru u205(S)

See table for A and B dimensions

C & E DIMENSIONS

Bar	C	E
p201(S)	47'-4"	1'-10"
w201(E)	42'-1"	1'-2"

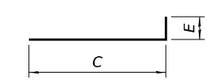

BARS p201(S) & w201(E)

See table for C and E dimensions

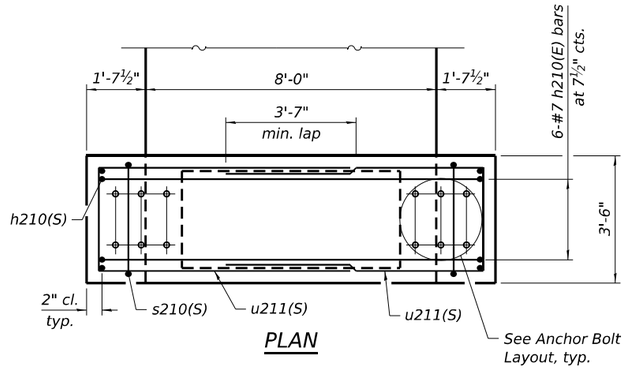

PLAN

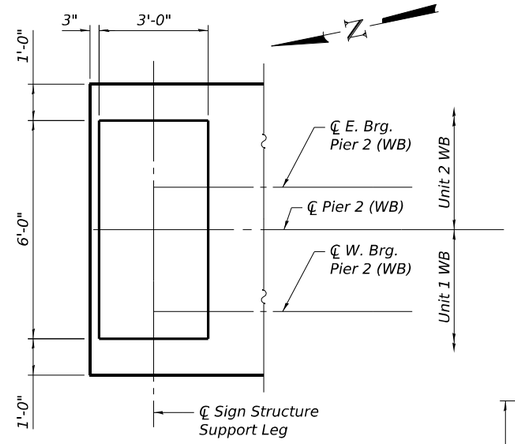

CAP END PLAN

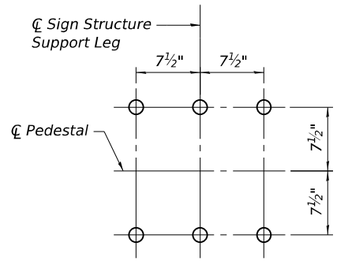

ANCHOR BOLT LAYOUT

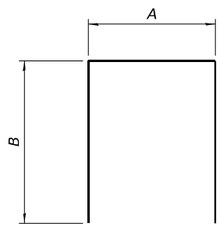

BARS h210(S), u210(S), & u211(S)

A & B DIMENSIONS

Bar	A	B
h210(S)	10'-11"	1'-3"
u210(S)	2'-8"	4'-8"
u211(S)	3'-1"	7'-3"

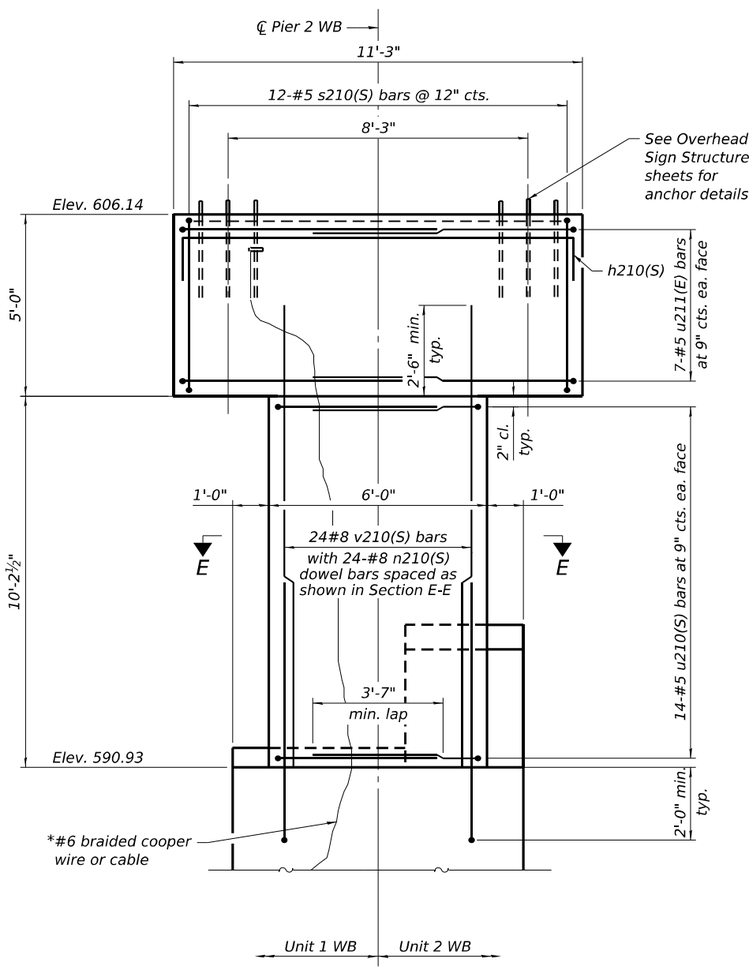

END VIEW
(Looking South)

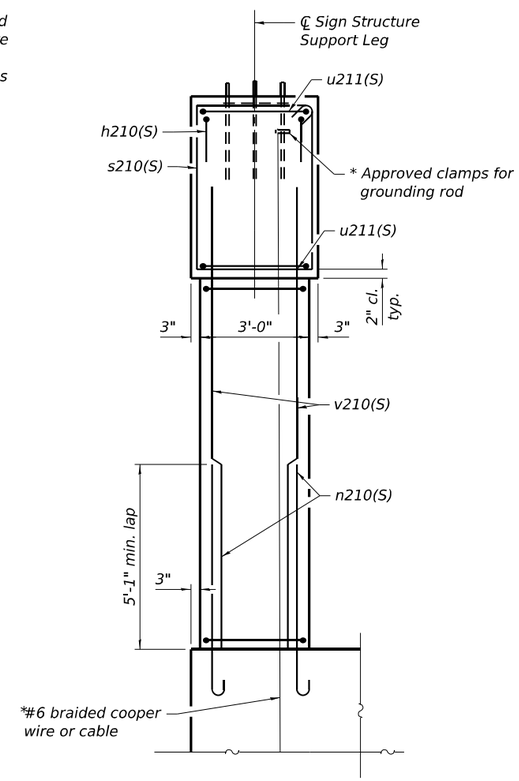

ELEVATION VIEW

* Cost of cable and clamps included in the cost of Concrete Structures

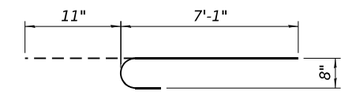

BAR n210(S)

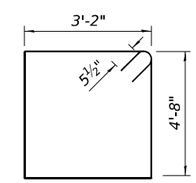

BAR s210(S)

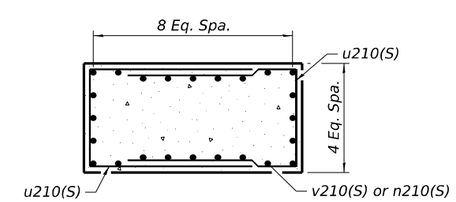

SECTION E-E

BILL OF MATERIAL - PIER 2 WB

	Bar	No.	Size	Length	Shape
	h201(S)	48	#6	31'-5"	
	h202(S)	18	#5	28'-3"	
	h203(S)	12	#5	28'-3"	
	h204(S)	8	#5	38'-0"	
	h205(S)	4	#5	38'-3"	
	h206(E)	42	#6	28'-8"	
	h207(E)	12	#6	28'-8"	
	h210(E)	12	#7	13'-5"	
	n201(E)	128	#9	13'-5"	
	n202(E)	14	#6	8'-1"	
	n210(E)	48	#8	8'-0"	
	p201(S)	24	#10	49'-2"	
	p202(S)	30	#10	36'-1"	
	p203(S)	15	#10	31'-3"	
	s201(S)	80	#6	30'-0"	
	s202(S)	68	#6	17'-0"	
	s203(E)	108	#6	19'-0"	
	s204(E)	108	#6	20'-10"	
	s210(E)	24	#5	16'-7"	
**	sp201(E)	4	#5	42'-7"	
	t201(E)	88	#10	18'-4"	
	t202(E)	80	#7	14'-8"	
	u201(S)	16	#6	16'-2"	
	u202(S)	6	#5	9'-11"	
	u203(S)	40	#5	15'-5"	
	u204(S)	38	#5	10'-8"	
	u205(S)	39	#5	9'-8"	
	u206(E)	16	#6	17'-7"	
	u210(E)	52	#5	12'-0"	
	u211(E)	28	#5	13'-3"	
	v201(E)	128	#9	47'-1"	
	v202(E)	14	#6	8'-8"	
	v210(E)	48	#8	12'-9"	
	w201(E)	30	#7	43'-3"	
	w202(E)	30	#7	42'-1"	
	Structure Excavation			Cu. Yd.	177
	Rock Excavation for Structures			Cu. Yd.	130
	Concrete Structures			Cu. Yd.	665.4
	Reinforcement Bars, Epoxy Coated			Pound	60,780
	Reinforcement Bars, Stainless Steel			Pound	22,620
	Concrete Sealer			Sq. Ft.	7,103

** Length is height of spiral.
Maximum lap for spirals = 3'-0"

WSP USA Inc.
30 N. LASALLE STREET
SUITE 4200
CHICAGO, IL 60602
TEL: (312) 782-8150
FAX: (312) 782-1684

USER NAME = USSJ696614	DESIGNED - SJJ	REVISED -	
	CHECKED - PJL	REVISED -	
PLOT SCALE = 4:2.0000 ':" / in.	DRAWN - SJJ	REVISED -	
PLOT DATE = 11/5/2025	CHECKED - PJL	REVISED -	

STATE OF ILLINOIS
DEPARTMENT OF TRANSPORTATION

PIER 2 WB DETAILS 2
STRUCTURE NUMBER 099-8309 WB AND 099-8325 EB

SHEET S-272 OF S-333 SHEETS

F.A.I RTE.	SECTION	COUNTY	TOTAL SHEETS	SHEET NO.
I-80	FAI 80 21 STRUCTURE 2	WILL	1230	853
		CONTRACT NO. 62R23		
		ILLINOIS	FED. AID PROJECT	

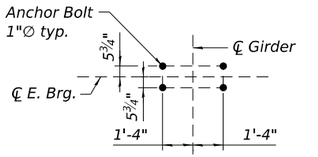

ANCHOR BOLT LAYOUT
(E. Brg.)

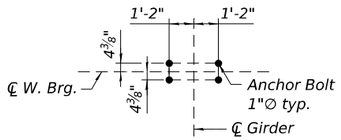

ANCHOR BOLT LAYOUT
(W. Brg.)

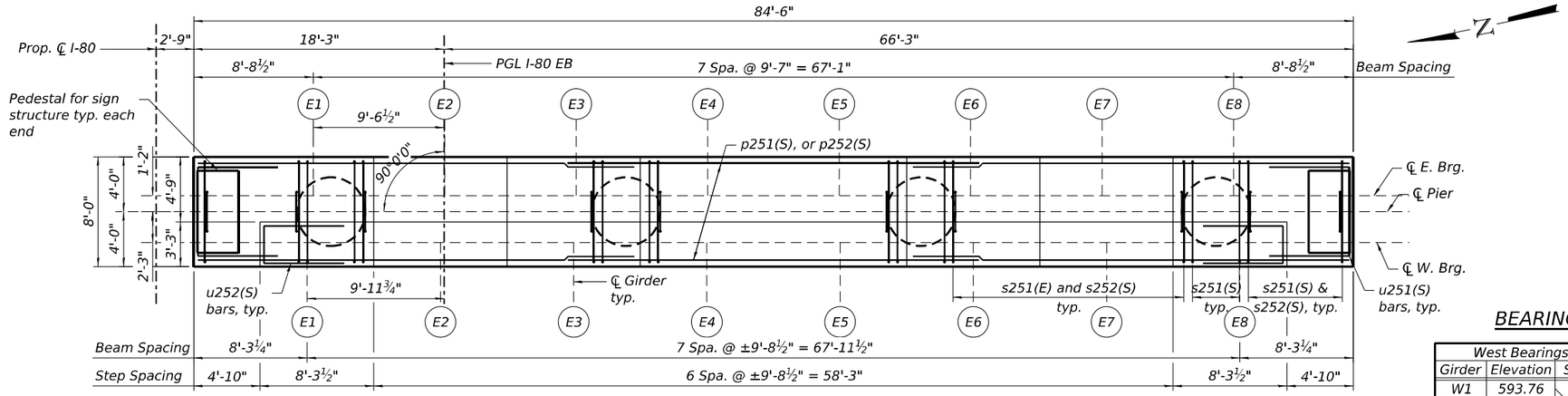

TOP PLAN
(Some bars omitted for clarity)

BEARING SEAT ELEVATIONS

West Bearings			East Bearings		
Girder	Elevation	Step Ht.	Girder	Elevation	Step Ht.
W1	593.76	2⅜"	W1	590.61	2¼"
W2	593.96	2¼"	W2	590.80	2¼"
W3	594.15	±2"	W3	590.99	±2"
W4	594.31	0"	W4	591.15	0"
W5	594.31	±2"	W5	591.15	±2"
W6	594.15	2¼"	W6	590.99	2¼"
W7	593.96	2⅜"	W7	590.80	2¼"
W8	593.76		W8	590.61	

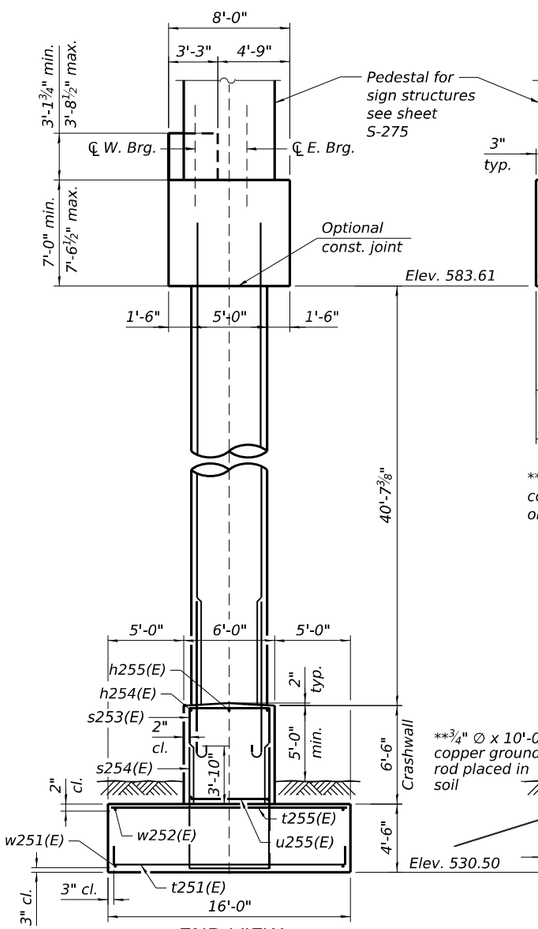

END VIEW
(The maximum applied service bearing pressure, Qmax = 12 ksf)

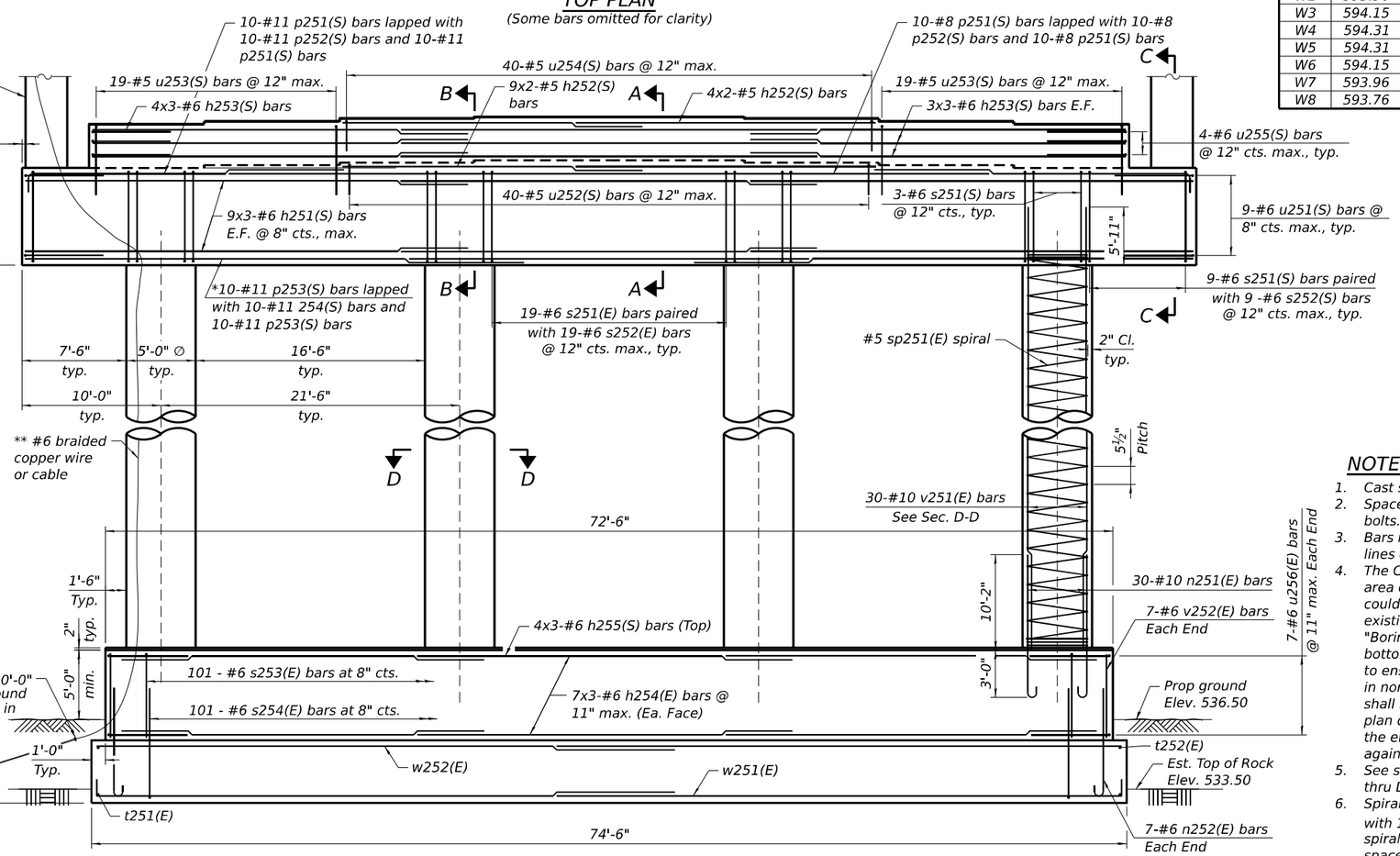

ELEVATION
(Looking East)

**Cost of rod, cable and clamps included in the cost of Concrete Structures

MINIMUM BAR LAP

#5 bar (Horiz.) = 3'-7"
#6 bar (Horiz.) = 4'-4"
#6 bar (Vert.) = 3'-10"
#7 bar (Horiz.) = 5'-0"
#8 bar (Vert.) = 5'-1"
#10 bar (Vert.) = 10'-2"
#11 bar (Horiz.) = 10'-6"

NOTES:

1. Cast steps monolithically with cap.
2. Space reinforcement in cap to miss anchor bolts.
3. Bars indicated thus 11x3-#5 etc. indicate 11 lines of bars with 3 segments per line.
4. The Contractor shall perform soil borings in the area of Pier 2 EB footing where soil borings could not be drilled due to inaccessibility of an existing structure. See special provisions "Boring Drilling for Pier Foundations". The bottom of footing elevations shall be adjusted to ensure a minimum embedment of 36 inches in non-weathered rock. The rock excavation shall be made with near-vertical sides at the plan dimensions to allow the sides and base of the embedded portion of the footing to be cast against undisturbed rock surfaces.
5. See sheet S-274 for Footing Plan, Sections A-A thru D-D, and Bill of Material.
6. Spiral reinforcement shall be provided with 1½ extra turns at each end, and extend spiral 2" into pier cap. Provide min. 4-#4 spacers or equivalent.
7. Concrete Sealer shall be applied to exposed surfaces of Pier cap, seats, columns, and wall above grade.

WSP USA Inc.
30 N. LASALLE STREET
SUITE 4200
CHICAGO, IL 60602
TEL: (312) 782-8150
FAX: (312) 782-1684

USER NAME = USSJ696614	DESIGNED - FIM	REVISED -	
	CHECKED - PJL	REVISED -	
PLOT SCALE = 0:2.0000 ':' / in.	DRAWN - FIM	REVISED -	
PLOT DATE = 11/5/2025	CHECKED - PJL	REVISED -	

STATE OF ILLINOIS
DEPARTMENT OF TRANSPORTATION

PIER 2 EB
STRUCTURE NUMBER 099-8309 WB AND 099-8325 EB

SHEET S-273 OF S-333 SHEETS

F.A.I RTE.	SECTION	COUNTY	TOTAL SHEETS	SHEET NO.
I-80	FAI 80 21 STRUCTURE 2	WILL	1230	854
		CONTRACT NO. 62R23		
		ILLINOIS	FED. AID PROJECT	

MODEL: Sheet
FILE NAME: pw://transystems-pw.bentley.com:transyscorp-pw1-hosted/Documents/Projects_2018/CH401/401180022/03-WSP/CAD/62R23-RB-1/Sheets/Structural/0998309-62R23-S809-P2EB01.dgn

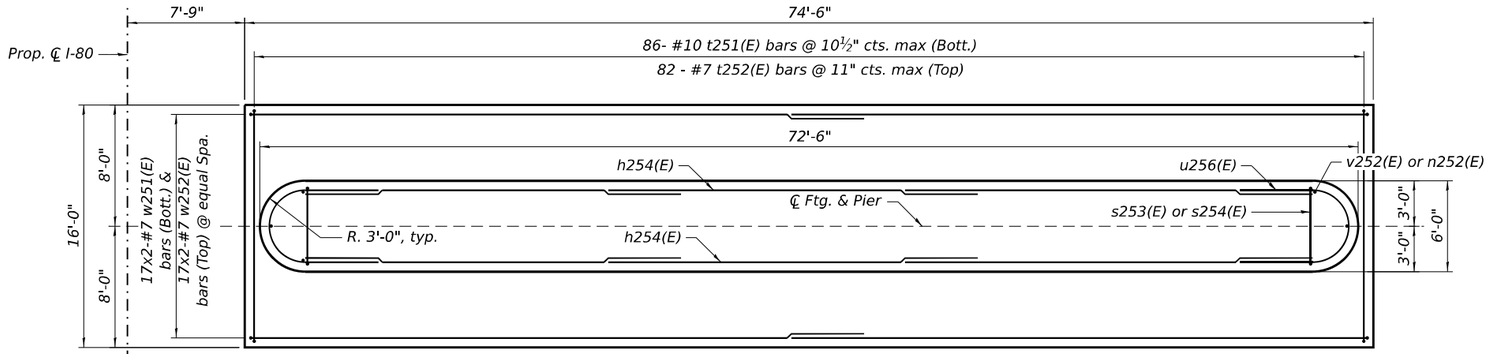

FOOTING PLAN

(Some bars omitted for clarity)

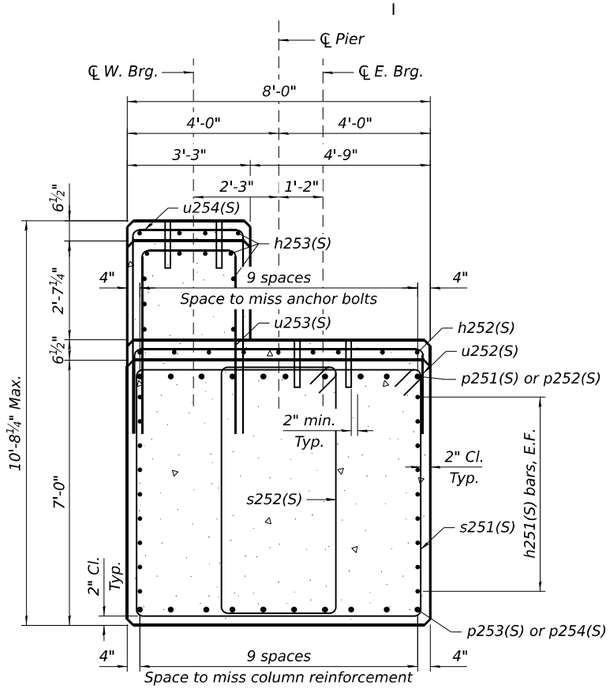

SECTION A-A

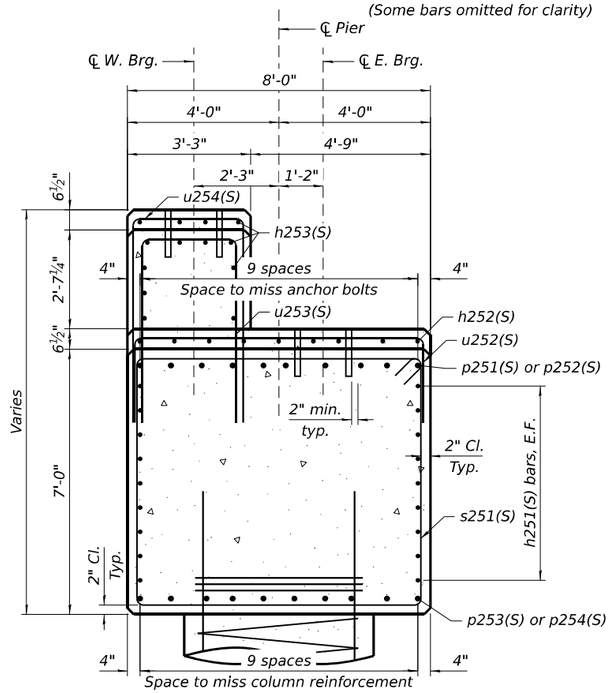

SECTION B-B

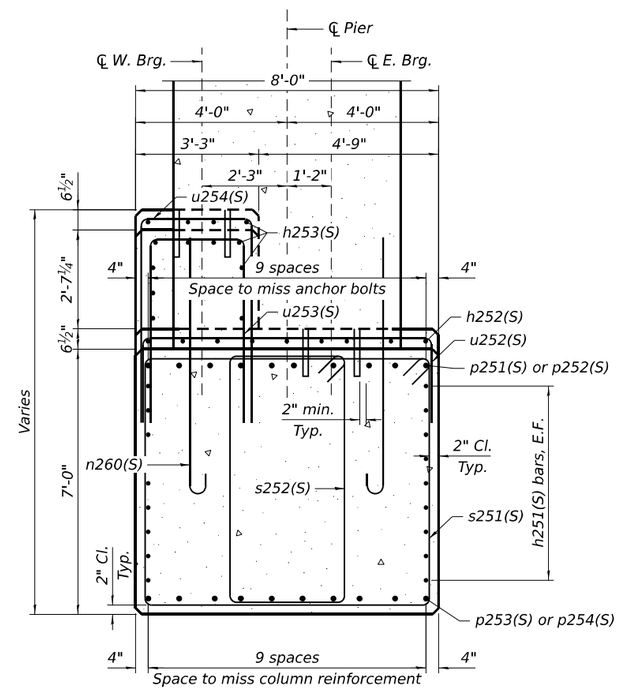

SECTION C-C

For pedestal bars, see sheet S-275

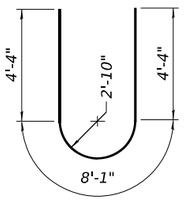

BARS u256(E)

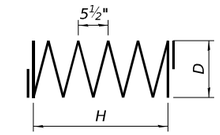

SPIRALS

H & D DIMENSIONS

Bar	H	D
sp251(E)	40'-8"	4'-8"

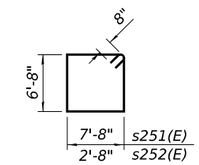

BARS s251(E) & s252(E)

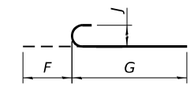

BARS n251(E), & n252(E)

See table for F, G and J dimensions

F, G & J DIMENSIONS

Bar	F	G	J
n251(E)	1'-5"	13'-2"	1'-1¼"
n251(E)	8"	8'-1"	6"

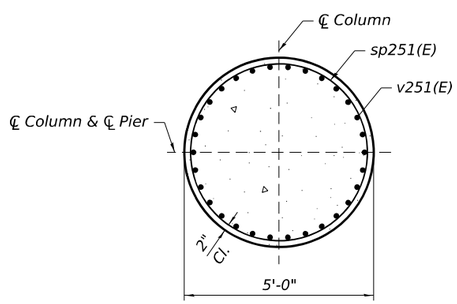

SECTION D-D

A & B DIMENSIONS

Bar	A	B
s253(E)	6'-2"	5'-8"
s254(E)	8'-3"	5'-8"
t251(E)	1'-10"	15'-6"
u251(S)	4'-4"	7'-8"
u252(S)	1'-5"	7'-8"
u253(S)	4'-0"	2'-11"
u254(S)	4'-5"	2'-11"
u255(S)	4'-4"	2'-11"

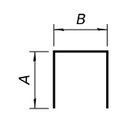

BARS s253(E), s254(E), t251(E), u251(s) thru u255(S) & w851(E)

See table for A and B dimensions

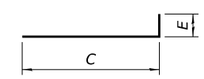

BARS p251(S) & w251(E)

See table for C and E dimensions

C & E DIMENSIONS

Bar	C	E
p251(S)	25'-10"	2'-0"
w251(E)	38'-6"	1'-2"

WSP USA Inc.
30 N. LASALLE STREET
SUITE 4200
CHICAGO, IL 60602
TEL: (312) 782-8150
FAX: (312) 782-1684

USER NAME = USSJ696614	DESIGNED - FIM	REVISED -	
	CHECKED - PJL	REVISED -	
PLOT SCALE = 0:2.0000 ':" / in.	DRAWN - FIM	REVISED -	
PLOT DATE = 11/5/2025	CHECKED - PJL	REVISED -	

STATE OF ILLINOIS
DEPARTMENT OF TRANSPORTATION

PIER 2 EB DETAILS 1
STRUCTURE NUMBER 099-8309 WB AND 099-8325 EB

SHEET S-274 OF S-333 SHEETS

F.A.I RTE.	SECTION	COUNTY	TOTAL SHEETS	SHEET NO.
I-80	FAI 80 21 STRUCTURE 2	WILL	1230	855
		CONTRACT NO. 62R23		
	ILLINOIS	FED. AID PROJECT		

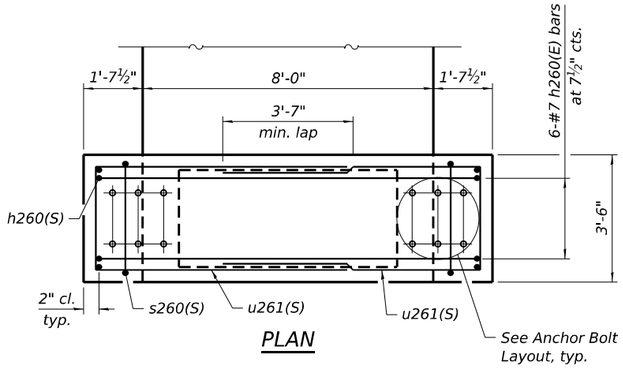

PLAN

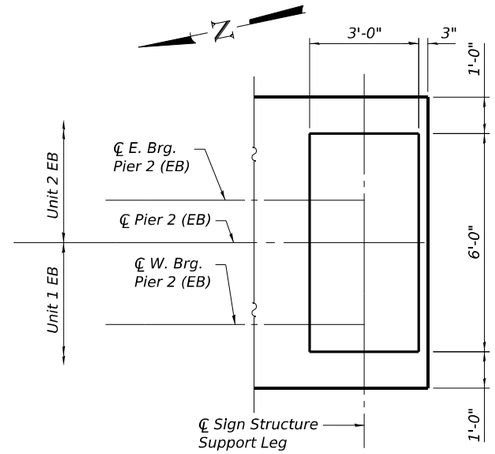

CAP END PLAN

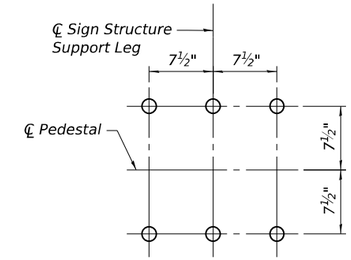

ANCHOR BOLT LAYOUT

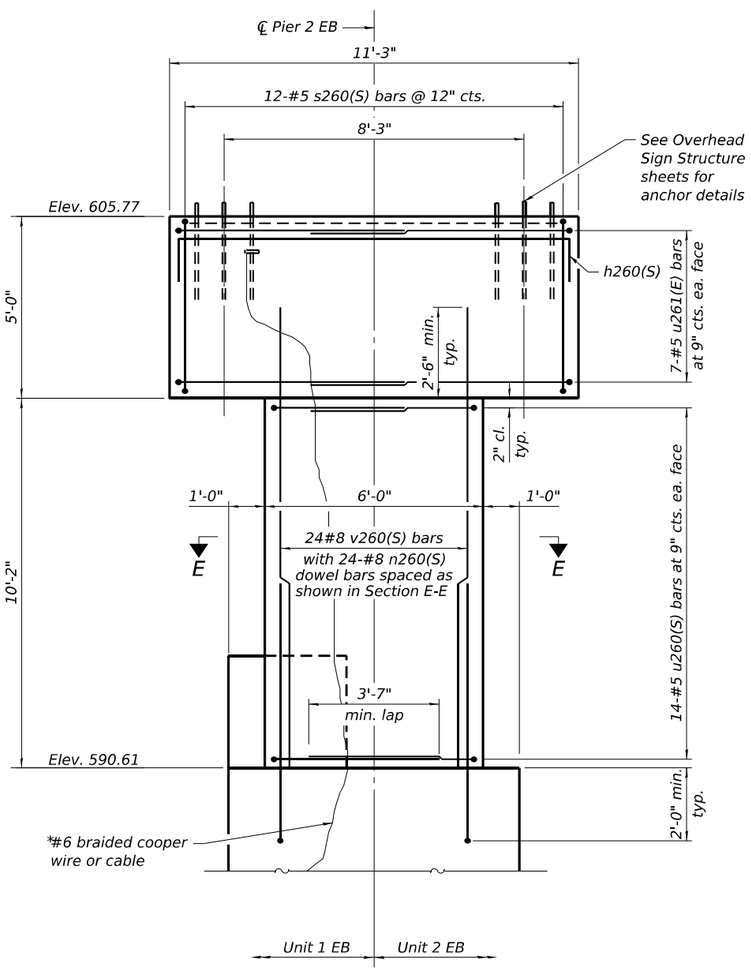

END VIEW
(Looking North)

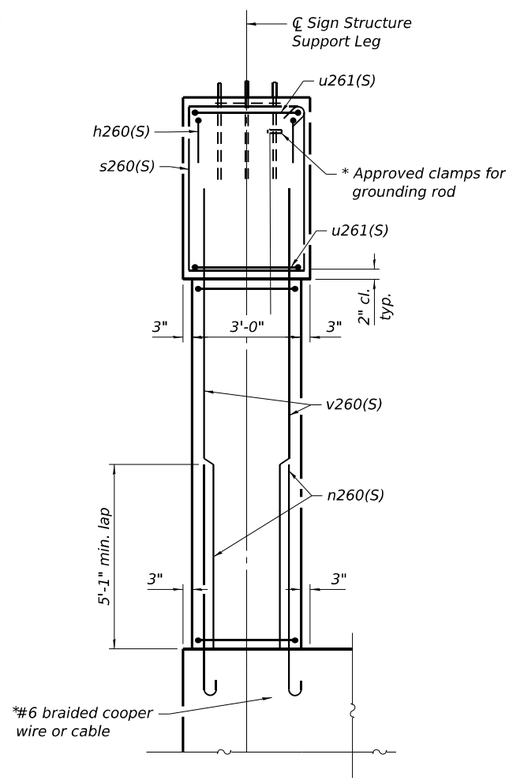

ELEVATION VIEW

* Cost of cable and clamps included in the cost of Concrete Structures

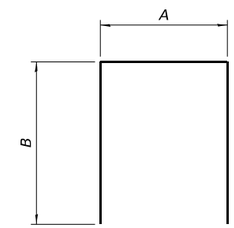

A & B DIMENSIONS

Bar	A	B
h260(S)	10'-11"	1'-3"
u260(S)	2'-8"	4'-8"
u261(S)	3'-1"	7'-3"

BARS h260(S), u260(S), & u261(S)

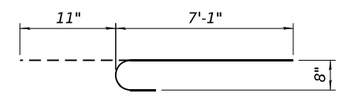

BAR n260(S)

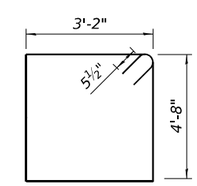

BAR s260(S)

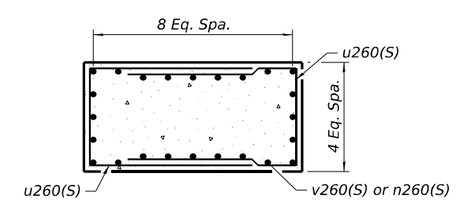

SECTION E-E

BILL OF MATERIAL - PIER 2 EB

	Bar	No.	Size	Length	Shape
	h251(S)	54	#6	31'-0"	
	h252(S)	26	#5	20'-7"	
	h253(S)	30	#6	27'-9"	
	h254(E)	42	#6	25'-1"	
	h255(E)	12	#6	27'-0"	
	h260(S)	12	#7	12'-2"	
	n251(E)	120	#10	14'-7"	
	n252(E)	14	#6	8'-9"	
	n260(S)	48	#8	8'-0"	
	p251(S)	20	#11	27'-10"	
	p252(S)	10	#11	53'-6"	
	p253(S)	20	#11	36'-7"	
	p254(S)	10	#11	32'-0"	
	s251(S)	87	#6	30'-0"	
	s252(S)	75	#6	20'-0"	
	s253(E)	101	#6	18'-0"	
	s254(E)	101	#6	22'-2"	
	s260(S)	24	#5	16'-7"	
**	sp251(E)	4	#5	40'-8"	
	t251(E)	86	#10	19'-2"	
	t252(E)	82	#7	15'-6"	
	u251(S)	18	#6	16'-4"	
	u252(S)	40	#5	10'-6"	
	u253(S)	38	#5	10'-11"	
	u254(S)	40	#5	11'-9"	
	u255(S)	8	#6	11'-7"	
	u256(E)	14	#6	17'-7"	
	u260(S)	56	#5	12'-0"	
	u261(S)	28	#5	13'-3"	
	v251(E)	120	#10	46'-7"	
	v252(E)	14	#6	10'-4"	
	v260(S)	48	#8	12'-8"	
	w251(E)	34	#7	39'-8"	
	w252(E)	34	#7	38'-6"	
	Structure Excavation		Cu. Yd.	175	
	Rock Excavation for Structures		Cu. Yd.	133	
	Concrete Structures		Cu. Yd.	672.6	
	Reinforcement Bars, Epoxy Coated		Pound	62,340	
	Reinforcement Bars, Stainless Steel		Pound	27,190	
	Concrete Sealer		Sq. Ft.	7,074	

** Length is height of spiral.
Maximum lap for spirals = 3'-0"

WSP USA Inc.
30 N. LASALLE STREET
SUITE 4200
CHICAGO, IL 60602
TEL: (312) 782-8150
FAX: (312) 782-1684

USER NAME = USSJ696614	DESIGNED - SJJ	REVISED -	
	CHECKED - PJL	REVISED -	
PLOT SCALE = 4:2.0000 ':" / in.	DRAWN - SJJ	REVISED -	
PLOT DATE = 11/5/2025	CHECKED - PJL	REVISED -	

STATE OF ILLINOIS
DEPARTMENT OF TRANSPORTATION

PIER 2 EB DETAILS 2
STRUCTURE NUMBER 099-8309 WB AND 099-8325 EB

SHEET S-275 OF S-333 SHEETS

F.A.I RTE.	SECTION	COUNTY	TOTAL SHEETS	SHEET NO.
I-80	FAI 80 21 STRUCTURE 2	WILL	1230	856
		CONTRACT NO. 62R23		
		ILLINOIS	FED. AID PROJECT	

MODEL: Sheet
FILE NAME: pw://transystems-pw.bentley.com:transyscorp-pw1-hosted/Documents/Projects_2018/CH401/401180022/03-WSP/CAD/62R23-RB-1/Sheets/Structural/0998309-62R23-SB11-P2EB03.dgn

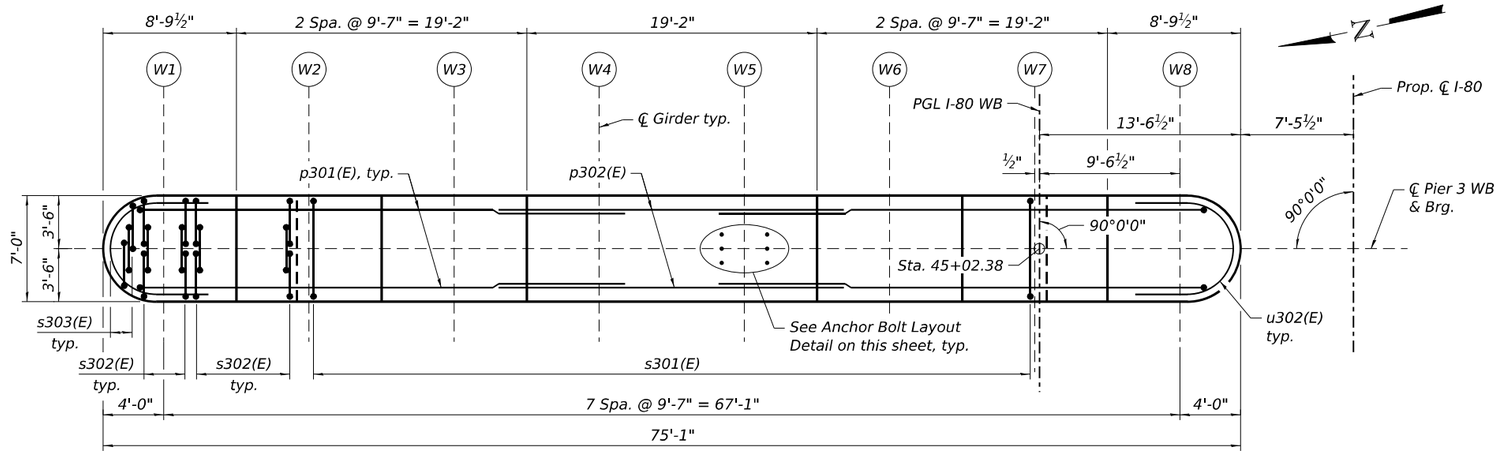

TOP PLAN

BEARING SEAT ELEVATIONS

Top of Bearing		
Girder	Elevation	Step Ht.
W1	590.21	
		2¼"
W2	590.40	
		2¼"
W3	590.59	
		1⅞"
W4	590.75	
		--
W5	590.75	
		1⅞"
W6	590.59	
		2¼"
W7	590.40	
		2¼"
W8	590.21	

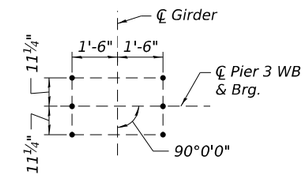

ANCHOR BOLT LAYOUT

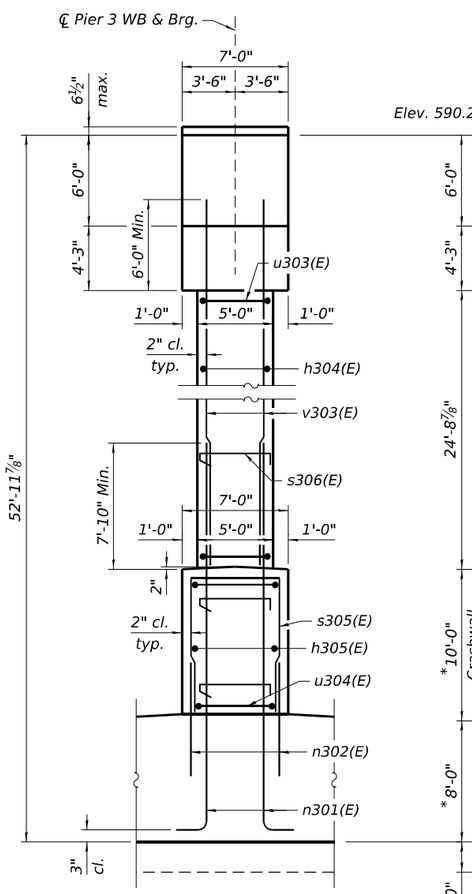

END VIEW

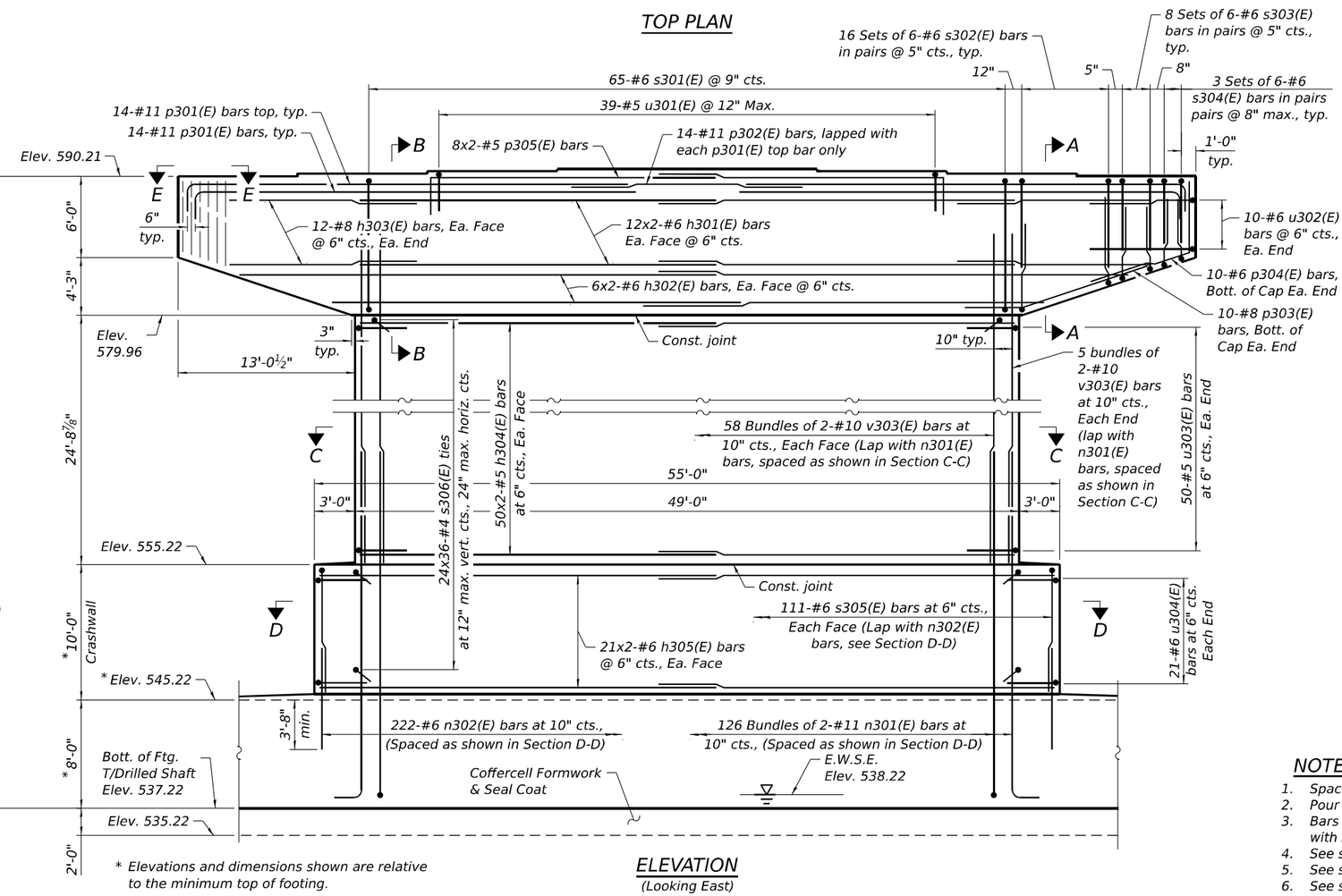

ELEVATION
(Looking East)

* Elevations and dimensions shown are relative to the minimum top of footing.

MINIMUM BAR LAP

#5 bar (Horiz.) = 3'-7"
#5 bar (Vert.) = 3'-2"
#6 bar (Horiz.) = 4'-4"
#6 bar (Vert.) = 4'-9"
#8 bar (Horiz.) = 5'-9"
#10 bar (Vert.) = 10'-2"
#11 bar (Horiz.) = 14'-2"

NOTES:

1. Space reinforcement in cap to miss anchor bolts.
2. Pour steps monolithically with cap.
3. Bars indicated thus 11x3-#5 etc. indicate 11 lines of bars with 3 segments per line.
4. See sheet S-277 for Footing Plan.
5. See sheet S-284 or Sections A-A, B-B, C-C, D-D, and View E-E.
6. See sheet S-287 for Bill of Material.

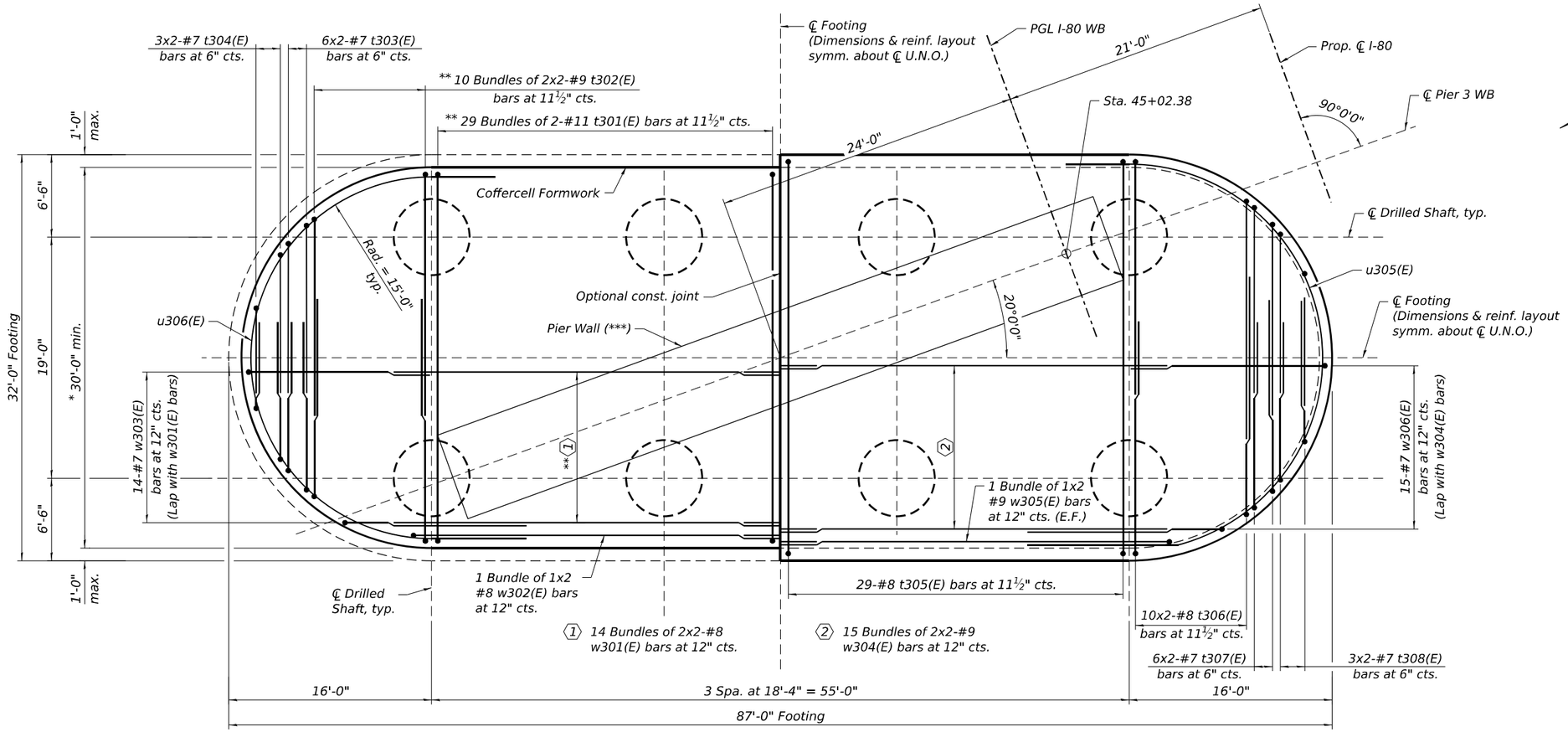

FOOTING PLAN

* Contractor shall modify details as necessary if formwork dimensions vary from those shown on these plans. See Special Provisions.

** Bar spacing may be adjusted as required to fit in the vicinity of drilled shafts.

*** Dowel bars from Footing to Pier Wall not shown for clarity.

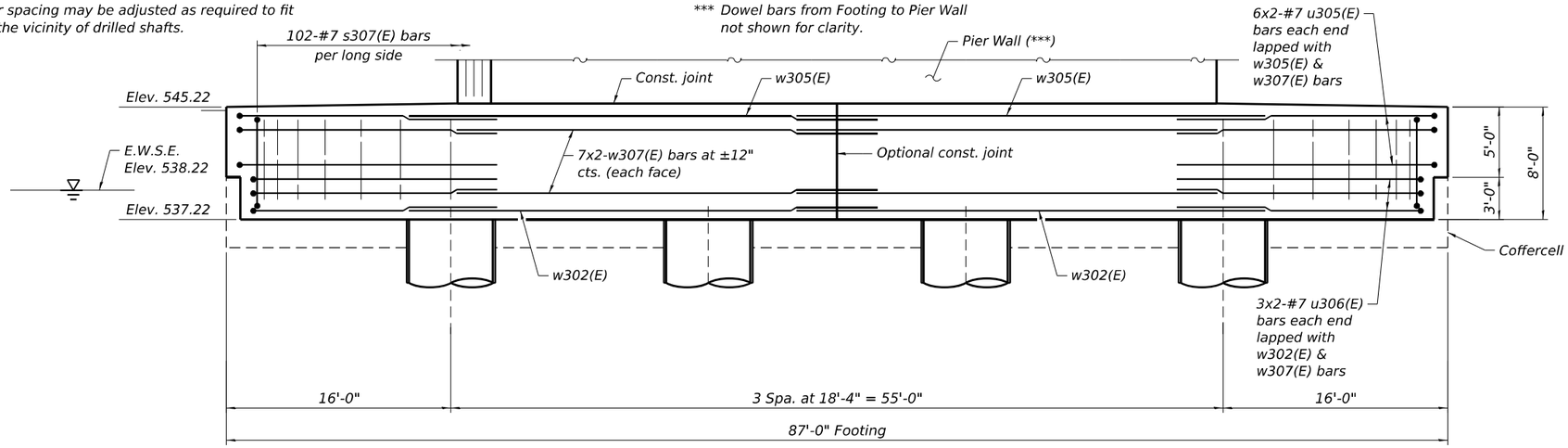

FOOTING ELEVATION

MINIMUM BAR LAP

#7 bar = 5'-0"
#8 bar = 5'-9"
#9 bar = 6'-5"

NOTES:

1. Bars indicated thus 6x2-#7 etc. indicate 6 lines of bars with 2 segments per line.
2. See sheet S-285 for End View and Coffercell details.
3. See sheet S-286 for footing reinforcement sections.
4. See sheet S-287 for Bill of Material.

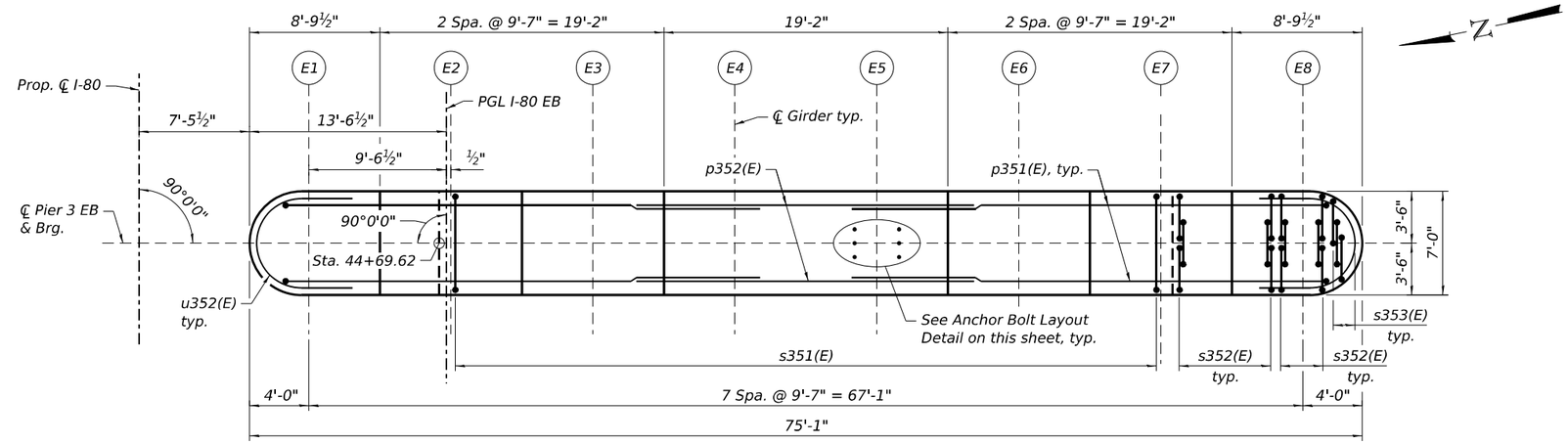

TOP PLAN

BEARING SEAT ELEVATIONS

Top of Bearing		
Girder	Elevation	Step Ht.
E1	590.27	
		2¼"
E2	590.46	
		2¼"
E3	590.65	
		1⅞"
E4	590.81	
		--
E5	590.81	
		1⅞"
E6	590.65	
		2¼"
E7	590.46	
		2¼"
E8	590.27	

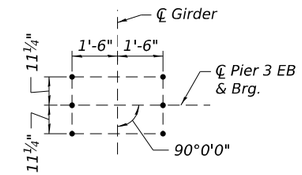

ANCHOR BOLT LAYOUT

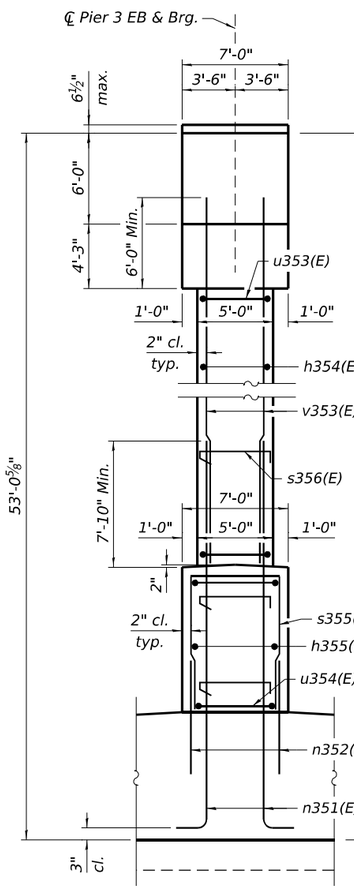

END VIEW

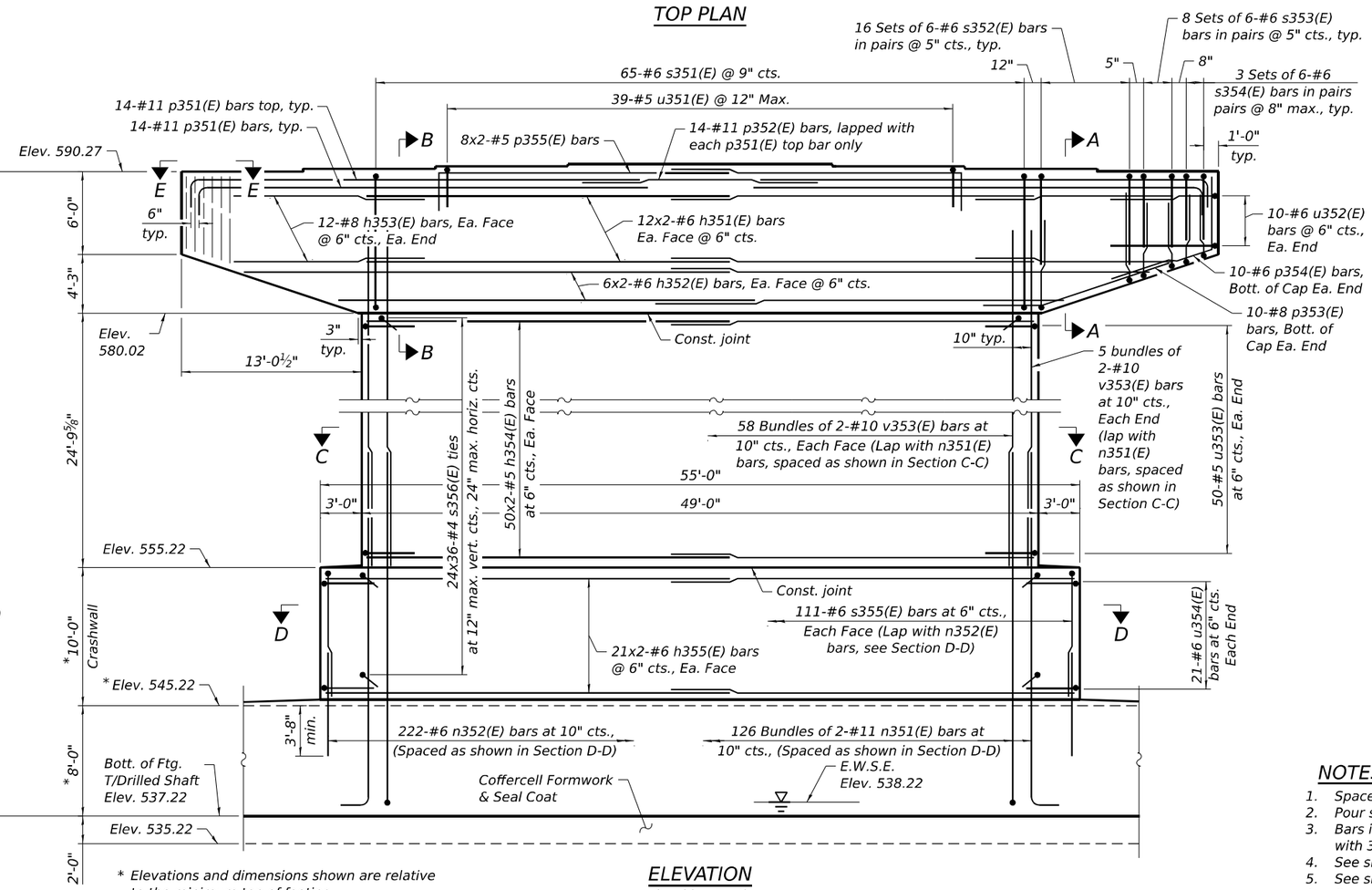

* Elevations and dimensions shown are relative to the minimum top of footing.

ELEVATION

(Looking East)

MINIMUM BAR LAP

#5 bar (Horiz.) = 3'-7"
#5 bar (Vert.) = 3'-2"
#6 bar (Horiz.) = 4'-4"
#6 bar (Vert.) = 4'-9"
#8 bar (Horiz.) = 5'-9"
#10 bar (Vert.) = 10'-2"
#11 bar (Horiz.) = 14'-2"

NOTES:

1. Space reinforcement in cap to miss anchor bolts.
2. Pour steps monolithically with cap.
3. Bars indicated thus 11x3-#5 etc. indicate 11 lines of bars with 3 segments per line.
4. See sheet S-279 for Footing Plan.
5. See sheet S-284 or Sections A-A, B-B, C-C, D-D, and View E-E.
6. See sheet S-287 for Bill of Material.

WSP USA Inc.
30 N. LASALLE STREET
SUITE 4200
CHICAGO, IL 60602
TEL: (312) 782-8150
FAX: (312) 782-1684

USER NAME = USSJ696614	DESIGNED - PSK	REVISED -	
	CHECKED - MAI	REVISED -	
PLOT SCALE = 10.0000 ' / in.	DRAWN - PSK	REVISED -	
PLOT DATE = 11/5/2025	CHECKED - PJL	REVISED -	

STATE OF ILLINOIS
DEPARTMENT OF TRANSPORTATION

PIER 3 EB
STRUCTURE NUMBER 099-8309 WB AND 099-8325 EB

SHEET S-278 OF S-333 SHEETS

F.A.I RTE.	SECTION	COUNTY	TOTAL SHEETS	SHEET NO.
I-80	FAI 80 21 STRUCTURE 2	WILL	1230	859
		CONTRACT NO. 62R23		
	ILLINOIS	FED. AID PROJECT		

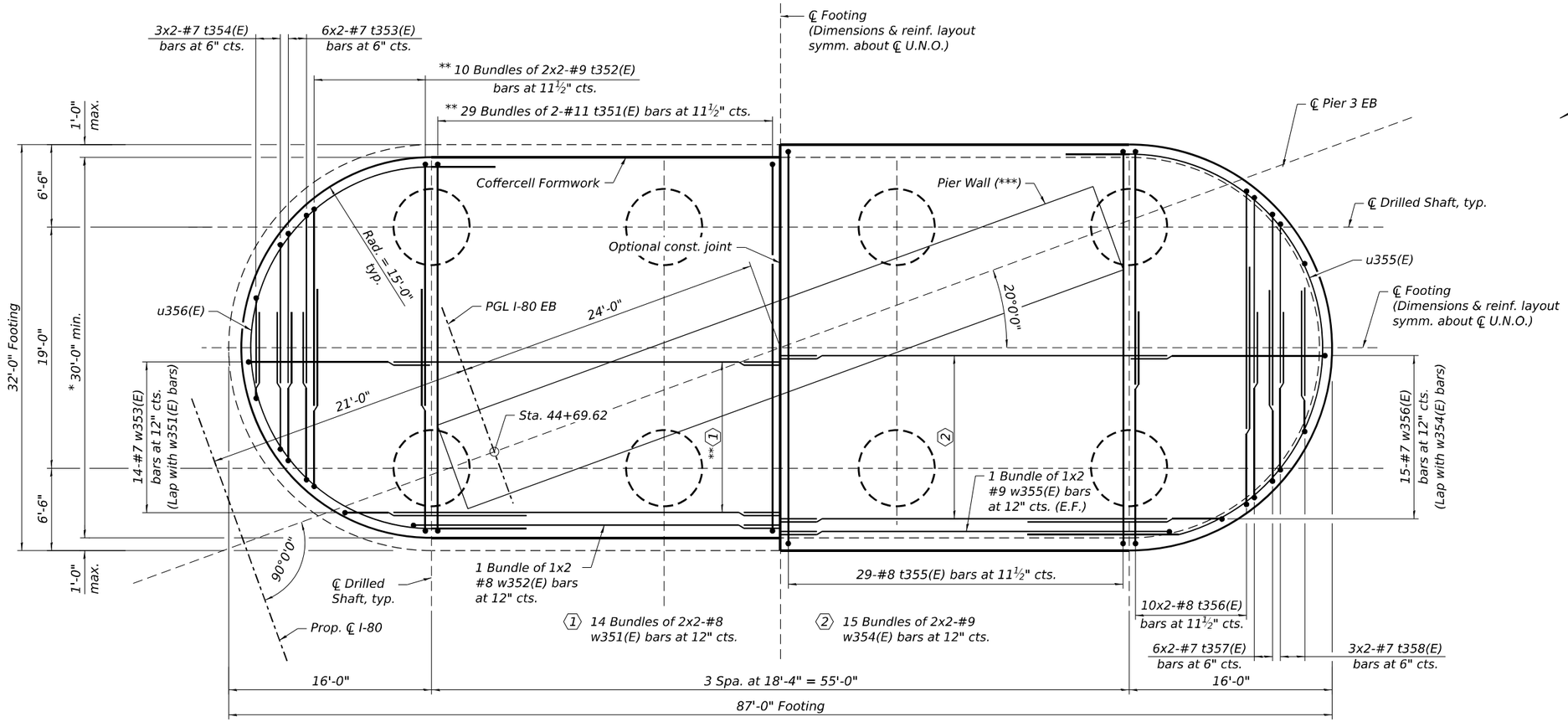

FOOTING PLAN

* Contractor shall modify details as necessary if formwork dimensions vary from those shown on these plans. See Special Provisions.

** Bar spacing may be adjusted as required to fit in the vicinity of drilled shafts.

*** Dowel bars from Footing to Pier Wall not shown for clarity.

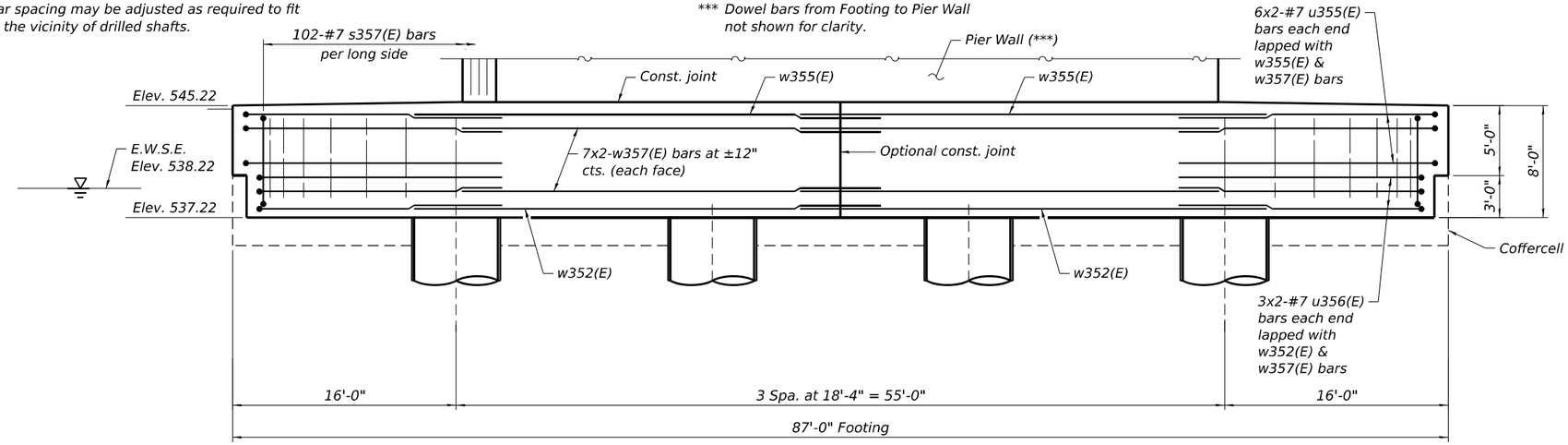

FOOTING ELEVATION

MINIMUM BAR LAP

#7 bar = 5'-0"
#8 bar = 5'-9"
#9 bar = 6'-5"

NOTES:

1. Bars indicated thus 6x2-#7 etc. indicate 6 lines of bars with 2 segments per line.
2. See sheet S-285 for End View and Coffercell details.
3. See sheet S-286 for footing reinforcement sections.
4. See sheet S-287 for Bill of Material.

WSP USA Inc.
30 N. LASALLE STREET
SUITE 4200
CHICAGO, IL 60602
TEL: (312) 782-8150
FAX: (312) 782-1684

USER NAME = USSJ696614	DESIGNED - PSK	REVISED -	
	CHECKED - MAI	REVISED -	
PLOT SCALE = 10:0 ':" / in.	DRAWN - PSK	REVISED -	
PLOT DATE = 11/5/2025	CHECKED - PJL	REVISED -	

STATE OF ILLINOIS
DEPARTMENT OF TRANSPORTATION

PIER 3 EB FOUNDATION
STRUCTURE NUMBER 099-8309 WB AND 099-8325 EB

SHEET S-279 OF S-333 SHEETS

F.A.I RTE.	SECTION	COUNTY	TOTAL SHEETS	SHEET NO.
I-80	FAI 80 21 STRUCTURE 2	WILL	1230	860
		CONTRACT NO. 62R23		
	ILLINOIS	FED. AID PROJECT		

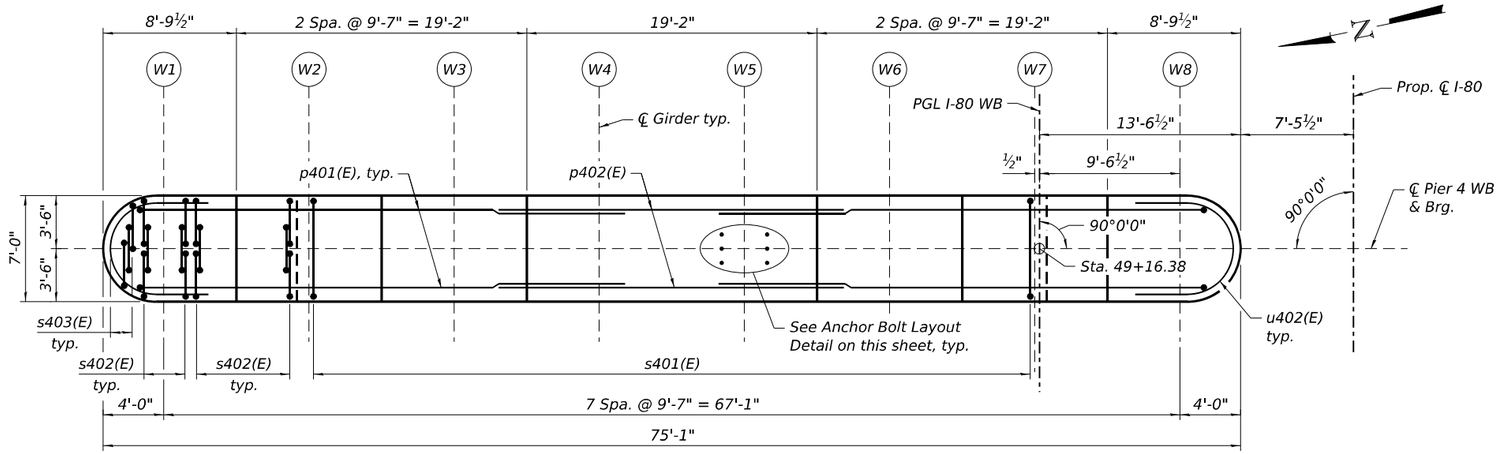

TOP PLAN

BEARING SEAT ELEVATIONS

Top of Bearing		
Girder	Elevation	Step Ht.
W1	585.73	
		2¼"
W2	585.92	
		2¼"
W3	586.11	
		1⅞"
W4	586.27	
		--
W5	586.27	
		1⅞"
W6	586.11	
		2¼"
W7	585.92	
		2¼"
W8	585.73	

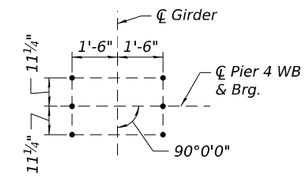

ANCHOR BOLT LAYOUT

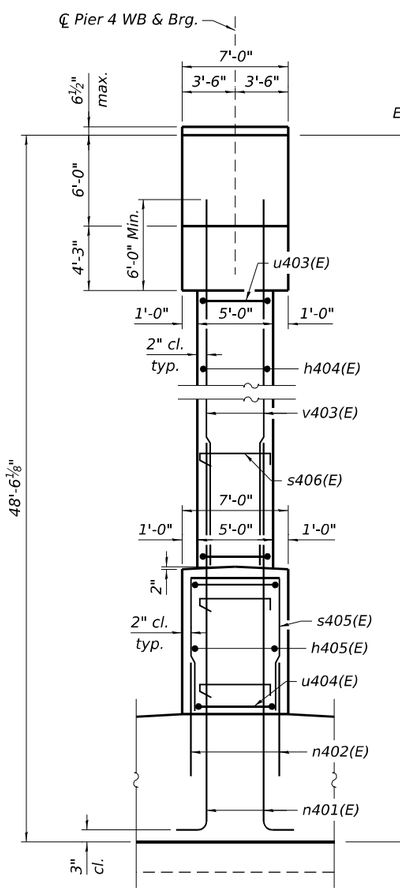

END VIEW

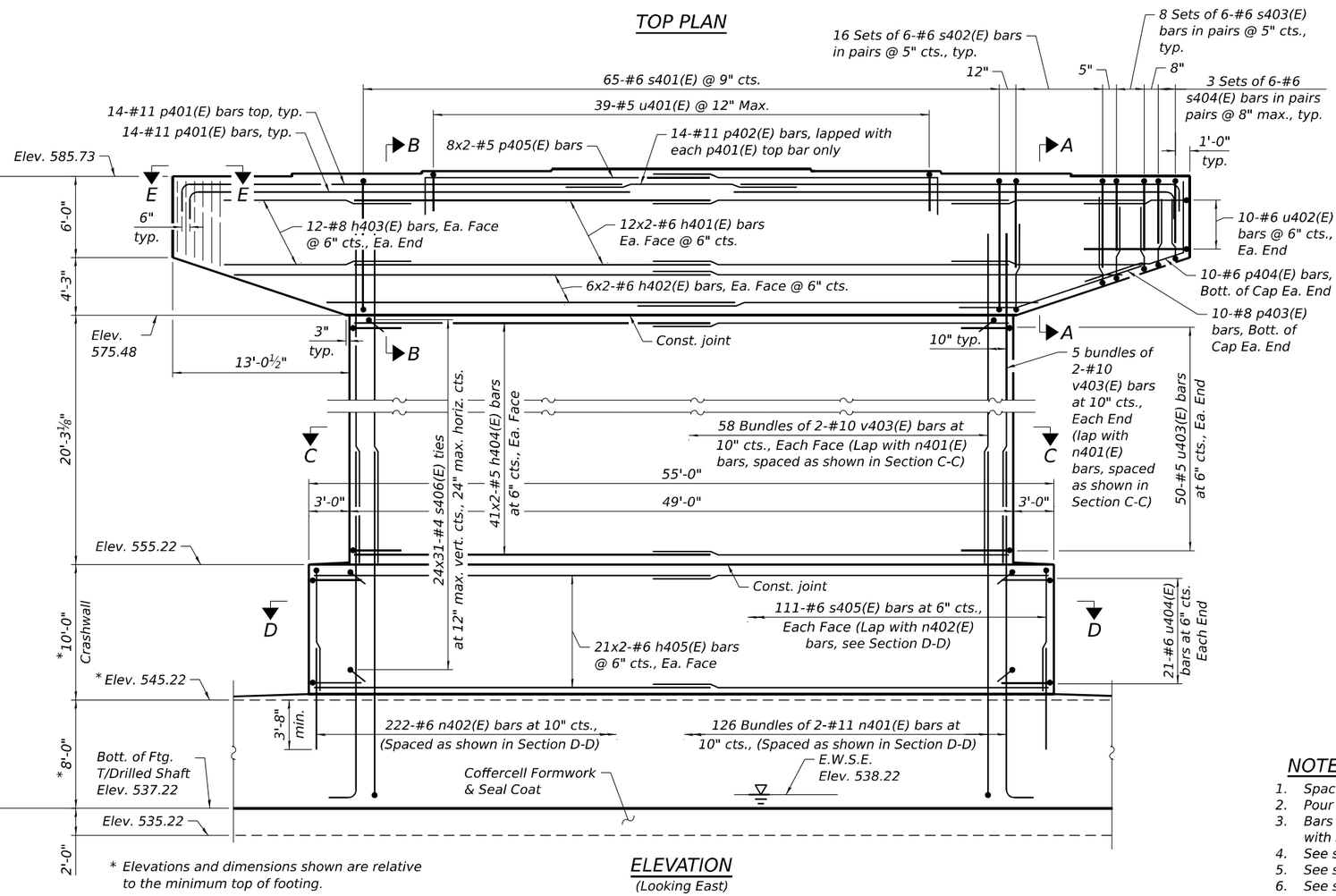

* Elevations and dimensions shown are relative to the minimum top of footing.

ELEVATION

(Looking East)

MINIMUM BAR LAP

#5 bar (Horiz.) = 3'-7"
#5 bar (Vert.) = 3'-2"
#6 bar (Horiz.) = 4'-4"
#6 bar (Vert.) = 4'-9"
#8 bar (Horiz.) = 5'-9"
#10 bar (Vert.) = 10'-2"
#11 bar (Horiz.) = 14'-2"

NOTES:

1. Space reinforcement in cap to miss anchor bolts.
2. Pour steps monolithically with cap.
3. Bars indicated thus 11x3-#5 etc. indicate 11 lines of bars with 3 segments per line.
4. See sheet S-281 for Footing Plan.
5. See sheet S-284 or Sections A-A, B-B, C-C, D-D, and View E-E.
6. See sheet S-287 for Bill of Material.

WSP USA Inc.
30 N. LASALLE STREET
SUITE 4200
CHICAGO, IL 60602
TEL: (312) 782-8150
FAX: (312) 782-1684

USER NAME = USSJ696614	DESIGNED - PSK	REVISED -	
	CHECKED - MAI	REVISED -	
PLOT SCALE = 10.0000 ' / in.	DRAWN - PSK	REVISED -	
PLOT DATE = 11/5/2025	CHECKED - PJL	REVISED -	

STATE OF ILLINOIS
DEPARTMENT OF TRANSPORTATION

PIER 4 WB
STRUCTURE NUMBER 099-8309 WB AND 099-8325 EB

SHEET S-280 OF S-333 SHEETS

F.A.I RTE.	SECTION	COUNTY	TOTAL SHEETS	SHEET NO.
I-80	FAI 80 21 STRUCTURE 2	WILL	1230	861
		CONTRACT NO. 62R23		
		ILLINOIS	FED. AID PROJECT	

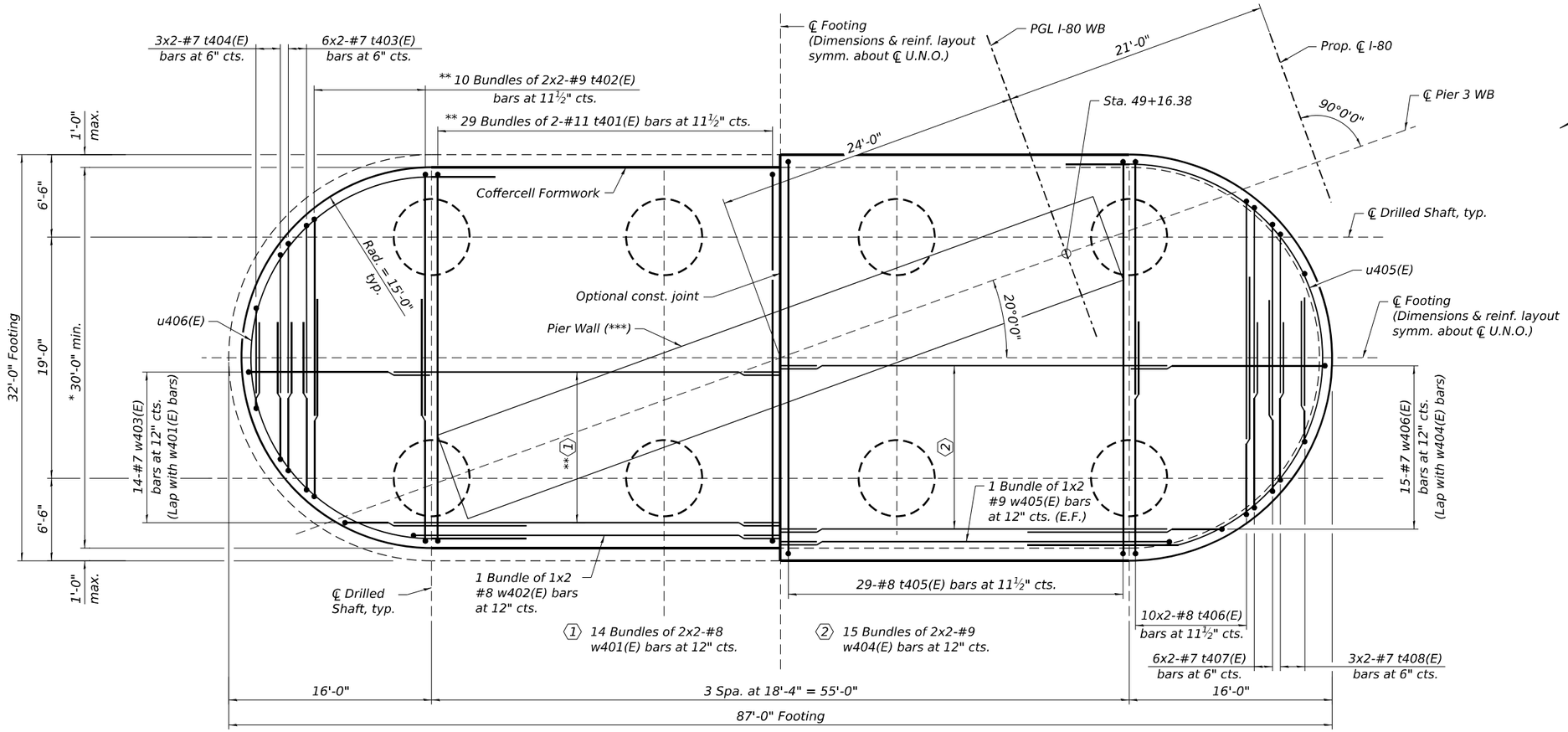

FOOTING PLAN

* Contractor shall modify details as necessary if formwork dimensions vary from those shown on these plans. See Special Provisions.

** Bar spacing may be adjusted as required to fit in the vicinity of drilled shafts.

*** Dowel bars from Footing to Pier Wall not shown for clarity.

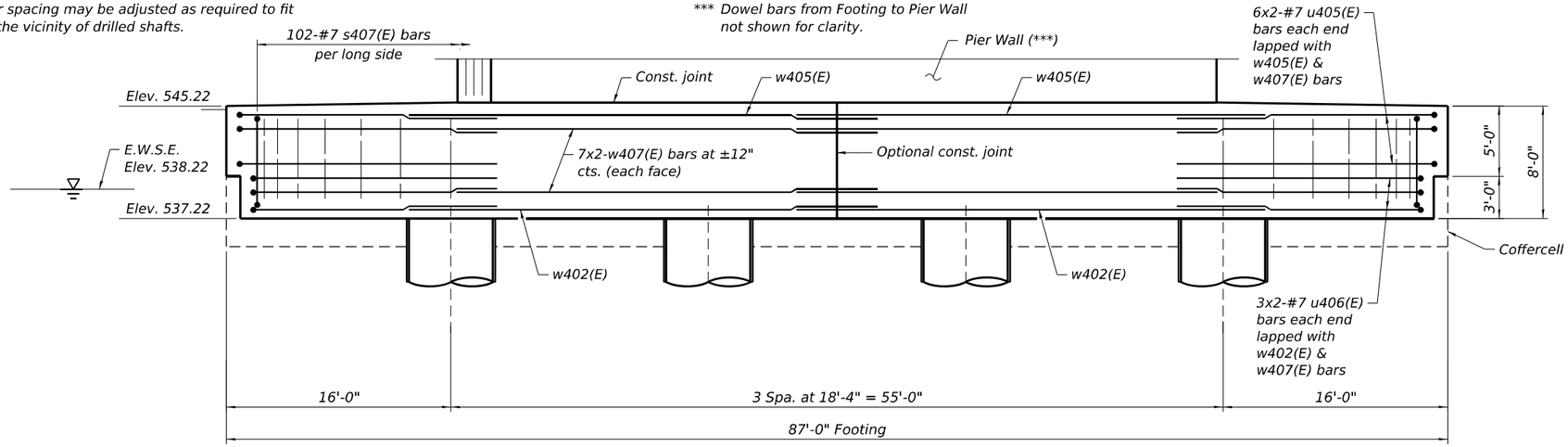

FOOTING ELEVATION

MINIMUM BAR LAP

#7 bar = 5'-0"
#8 bar = 5'-9"
#9 bar = 6'-5"

NOTES:

1. Bars indicated thus 6x2-#7 etc. indicate 6 lines of bars with segments per line.
2. See sheet S-285 for End View and Coffercell details.
3. See sheet S-286 for footing reinforcement sections.
4. See sheet S-287 for Bill of Material.

MODEL: Default
FILE NAME: pw://transystems-pw.bentley.com:transyscorp-pw1-hosted/Documents/Projects_2018/CH401/401180022/03-WSP/CAD/62R23-RB-1/Sheets/Structural/0998309-62R23-S817-PAVW802.dgn

WSP USA Inc.
30 N. LASALLE STREET
SUITE 4200
CHICAGO, IL 60602
TEL: (312) 782-8150
FAX: (312) 782-1684

USER NAME = USSJ696614	DESIGNED - PSK	REVISED -	
	CHECKED - MAI	REVISED -	
PLOT SCALE = 10:0 ':" / in.	DRAWN - PSK	REVISED -	
PLOT DATE = 11/5/2025	CHECKED - PJL	REVISED -	

STATE OF ILLINOIS
DEPARTMENT OF TRANSPORTATION

PIER 4 WB FOUNDATION
STRUCTURE NUMBER 099-8309 WB AND 099-8325 EB

SHEET S-281 OF S-333 SHEETS

F.A.I RTE.	SECTION	COUNTY	TOTAL SHEETS	SHEET NO.
I-80	FAI 80 21 STRUCTURE 2	WILL	1230	862
		CONTRACT NO. 62R23		
		ILLINOIS	FED. AID PROJECT	

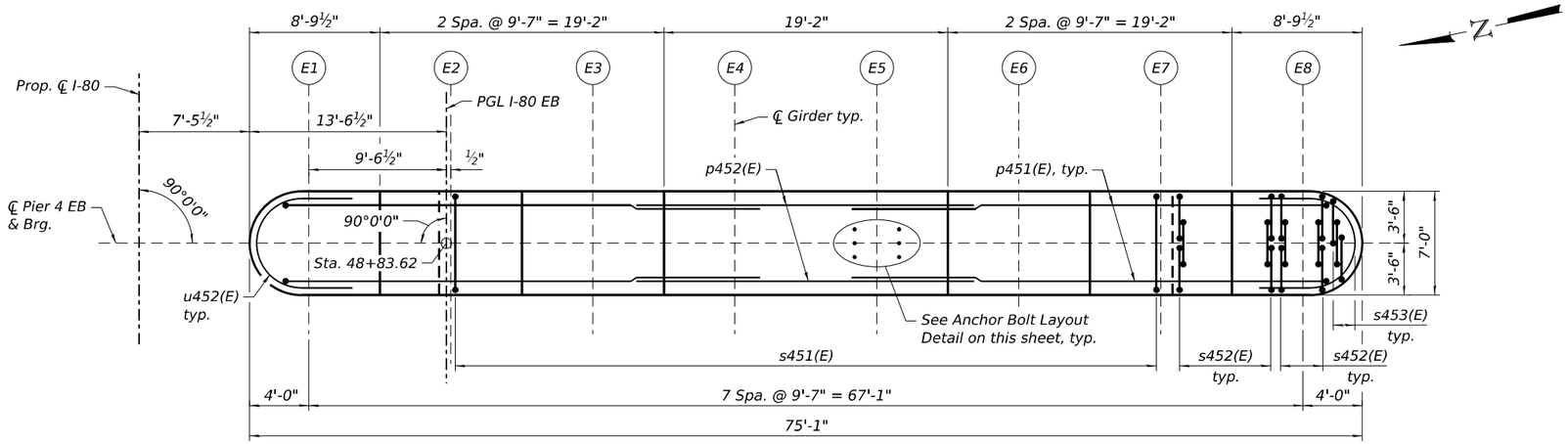

TOP PLAN

BEARING SEAT ELEVATIONS

Top of Bearing		
Girder	Elevation	Step Ht.
E1	586.33	
		2¼"
E2	586.52	
		2¼"
E3	586.71	
		1⅞"
E4	586.87	
		--
E5	586.87	
		1⅞"
E6	586.71	
		2¼"
E7	586.52	
		2¼"
E8	586.33	

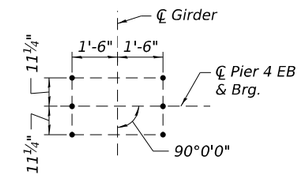

ANCHOR BOLT LAYOUT

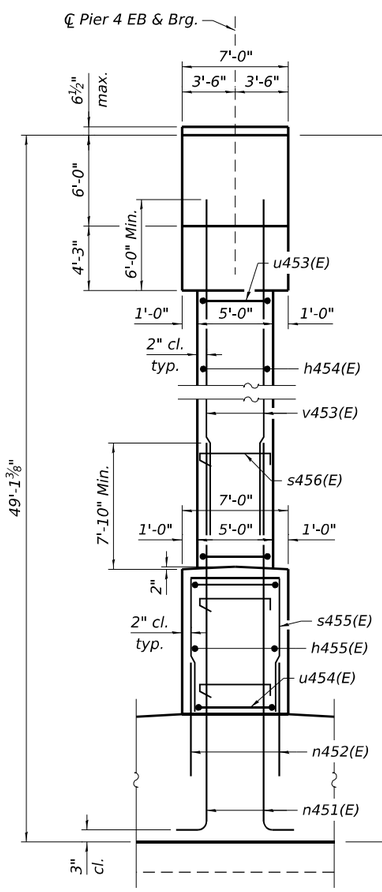

END VIEW

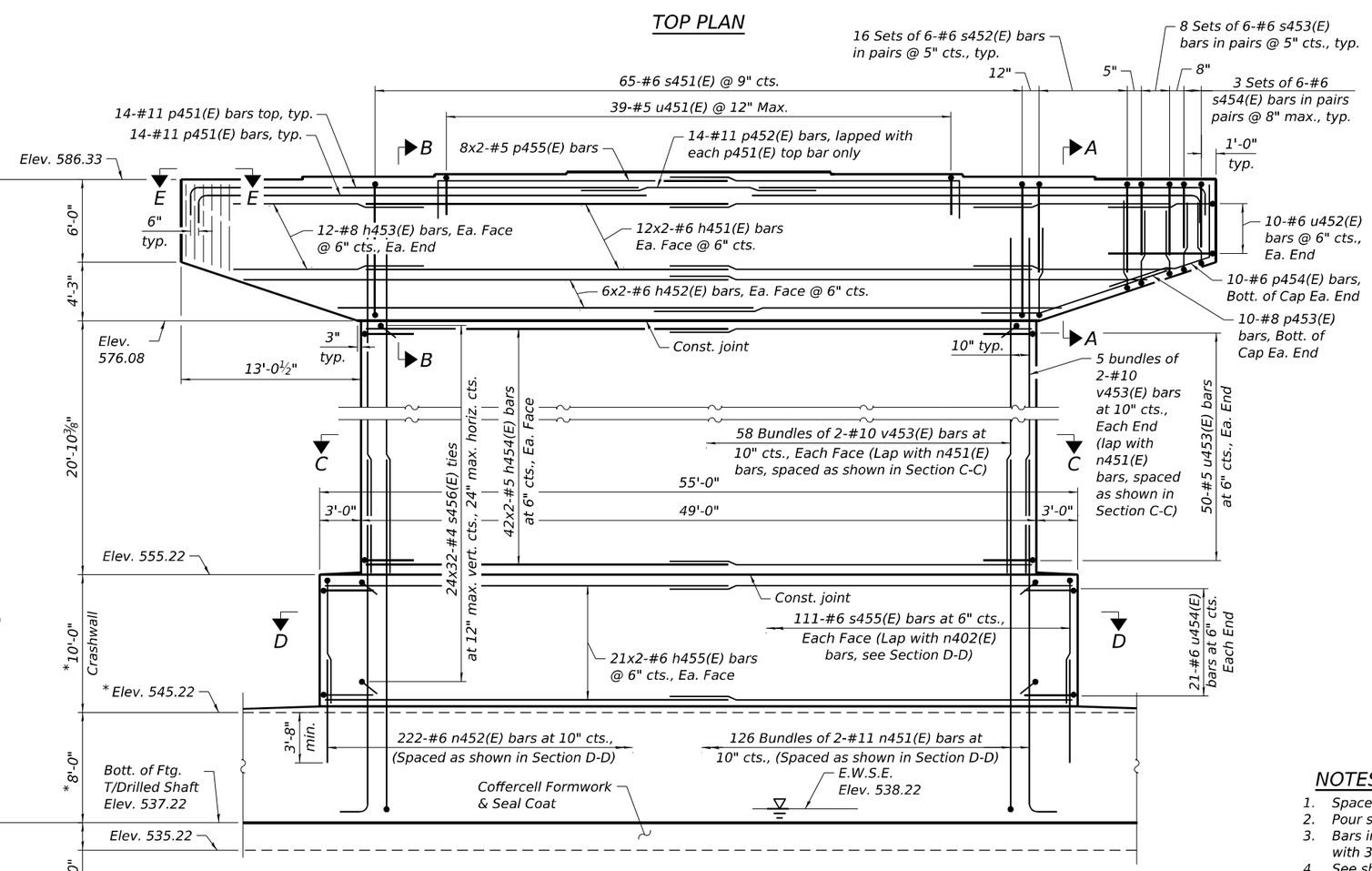

* Elevations and dimensions shown are relative to the minimum top of footing.

ELEVATION

(Looking East)

MINIMUM BAR LAP

#5 bar (Horiz.) = 3'-7"
#5 bar (Vert.) = 3'-2"
#6 bar (Horiz.) = 4'-4"
#6 bar (Vert.) = 4'-9"
#8 bar (Horiz.) = 5'-9"
#10 bar (Vert.) = 10'-2"
#11 bar (Horiz.) = 14'-2"

NOTES:

1. Space reinforcement in cap to miss anchor bolts.
2. Pour steps monolithically with cap.
3. Bars indicated thus 11x3-#5 etc. indicate 11 lines of bars with 3 segments per line.
4. See sheet S-283 for Footing Plan.
5. See sheet S-284 or Sections A-A, B-B, C-C, D-D, and View E-E.
6. See sheet S-287 for Bill of Material.

WSP USA Inc.
30 N. LASALLE STREET
SUITE 4200
CHICAGO, IL 60602
TEL: (312) 782-8150
FAX: (312) 782-1684

USER NAME = USSJ696614	DESIGNED - PSK	REVISED -	
	CHECKED - MAI	REVISED -	
PLOT SCALE = 10.0000 ' / in.	DRAWN - PSK	REVISED -	
PLOT DATE = 11/5/2025	CHECKED - PJL	REVISED -	

STATE OF ILLINOIS
DEPARTMENT OF TRANSPORTATION

PIER 4 EB
STRUCTURE NUMBER 099-8309 WB AND 099-8325 EB

SHEET S-282 OF S-333 SHEETS

F.A.I RTE.	SECTION	COUNTY	TOTAL SHEETS	SHEET NO.
I-80	FAI 80 21 STRUCTURE 2	WILL	1230	863
		CONTRACT NO. 62R23		
		ILLINOIS	FED. AID PROJECT	

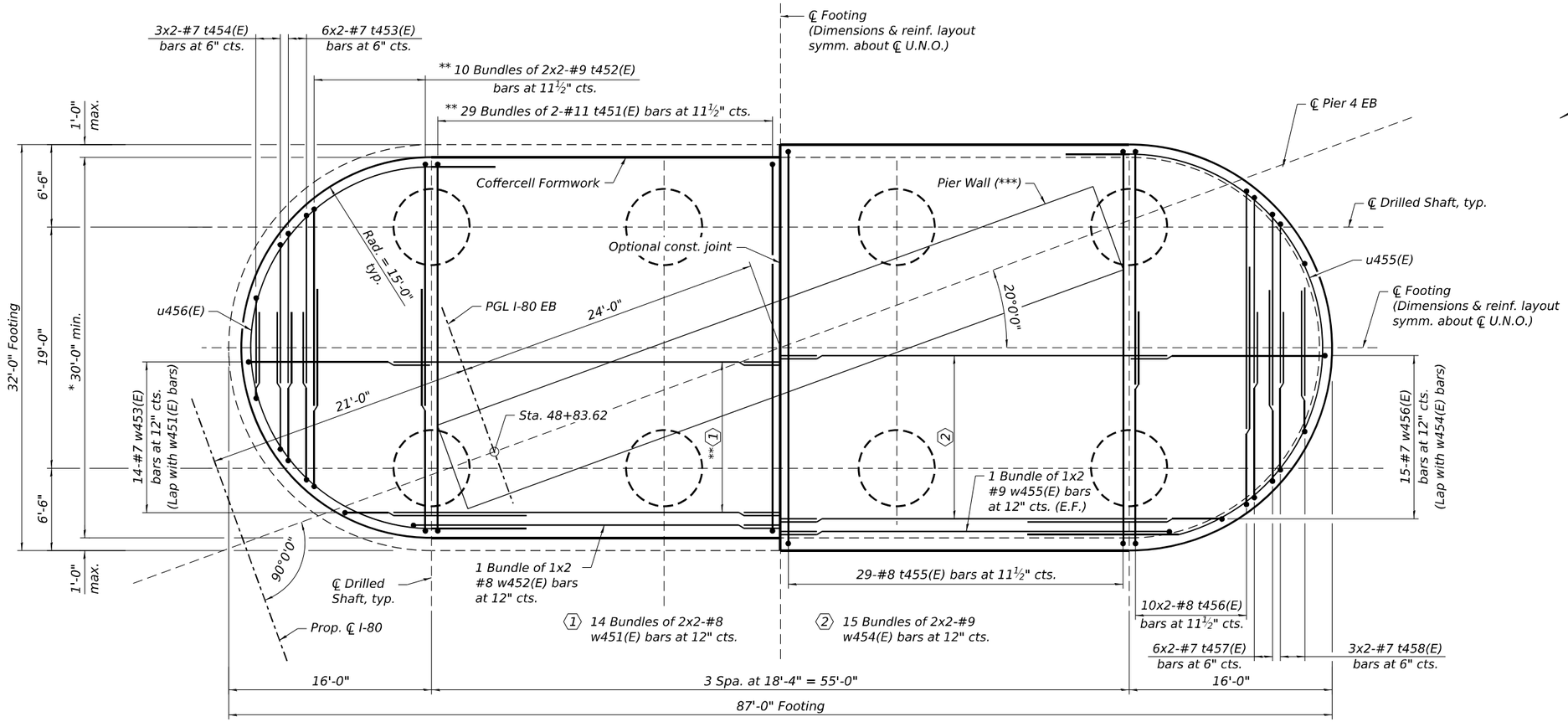

FOOTING PLAN

* Contractor shall modify details as necessary if formwork dimensions vary from those shown on these plans. See Special Provisions.

** Bar spacing may be adjusted as required to fit in the vicinity of drilled shafts.

*** Dowel bars from Footing to Pier Wall not shown for clarity.

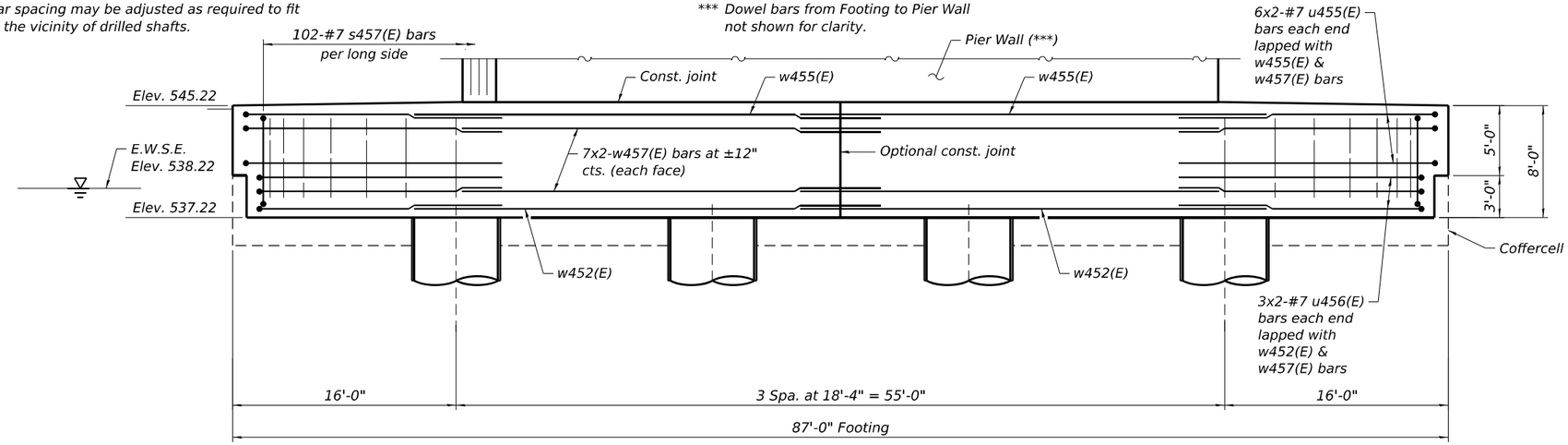

FOOTING ELEVATION

MINIMUM BAR LAP

#7 bar = 5'-0"
#8 bar = 5'-9"
#9 bar = 6'-5"

NOTES:

1. Bars indicated thus 6x2-#7 etc. indicate 6 lines of bars with 2 segments per line.
2. See sheet S-285 for End View and Coffercell details.
3. See sheet S-286 for footing reinforcement sections.
4. See sheet S-287 for Bill of Material.

MODEL: Default
FILE NAME: pw://transystems-pw.bentley.com:transyscorp-pw1-hosted/Documents/Projects_2018/CH401/401180022/03-WSP/CAD/62R23-R8-1/Sheets/Structural/0698309-62R23-S819-J4EB02.dgn

WSP USA Inc.
30 N. LASALLE STREET
SUITE 4200
CHICAGO, IL 60602
TEL: (312) 782-8150
FAX: (312) 782-1684

USER NAME = USSJ696614	DESIGNED - PSK	REVISED -	
	CHECKED - MAI	REVISED -	
PLOT SCALE = 10:0 ':" / in.	DRAWN - PSK	REVISED -	
PLOT DATE = 11/5/2025	CHECKED - PJL	REVISED -	

STATE OF ILLINOIS
DEPARTMENT OF TRANSPORTATION

PIER 4 EB FOUNDATION
STRUCTURE NUMBER 099-8309 WB AND 099-8325 EB

SHEET S-283 OF S-333 SHEETS

F.A.I RTE.	SECTION	COUNTY	TOTAL SHEETS	SHEET NO.
I-80	FAI 80 21 STRUCTURE 2	WILL	1230	864
		CONTRACT NO. 62R23		
		ILLINOIS	FED. AID PROJECT	

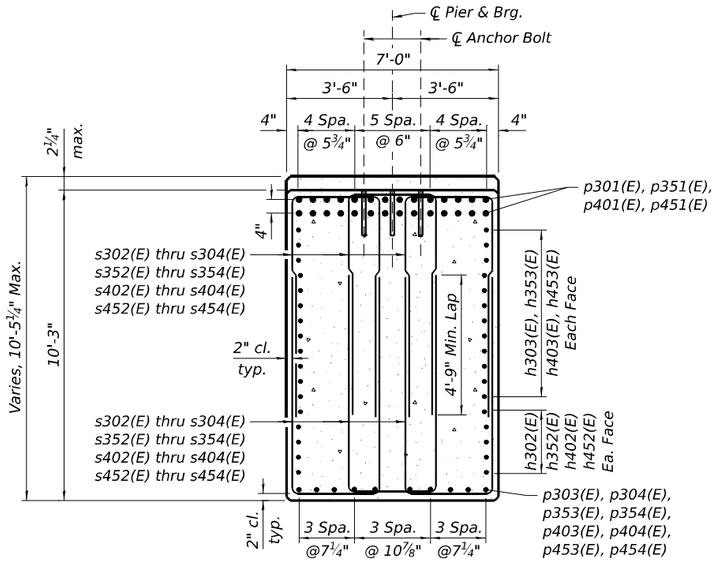

SECTION A-A

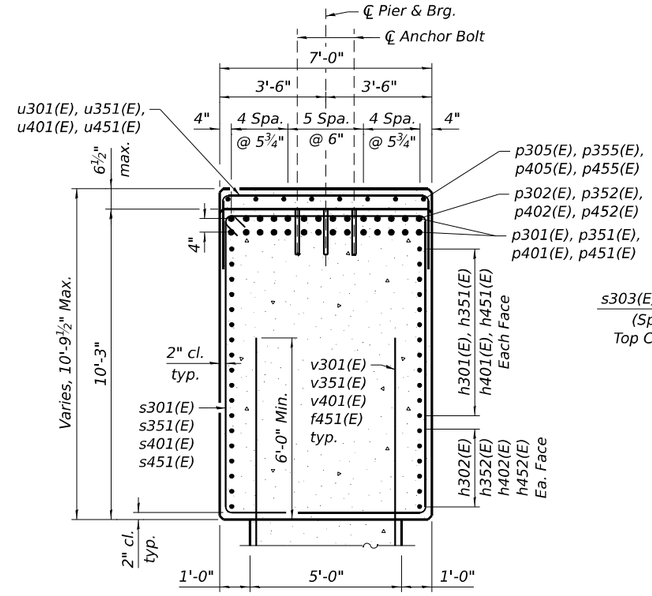

SECTION B-B

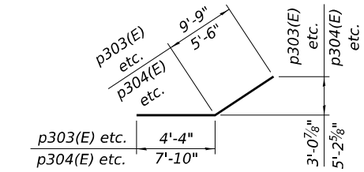

BARS p303(E), p304(E), p353(E), p354(E), OR p403(E), p404(E), p453(E), p454(E)

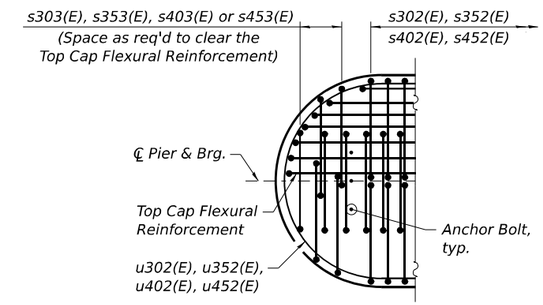

VIEW E-E

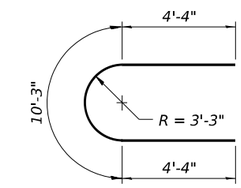

BARS u302(E), u352(E), u402(E), u452(E)

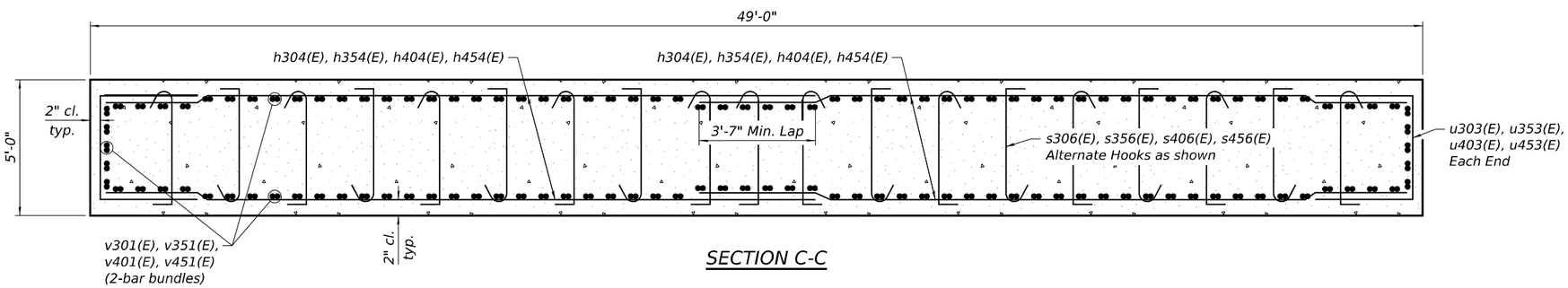

SECTION C-C

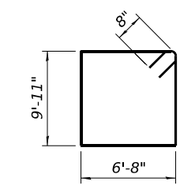

BARS s301(E), 351(E), 401(E), 451(E)

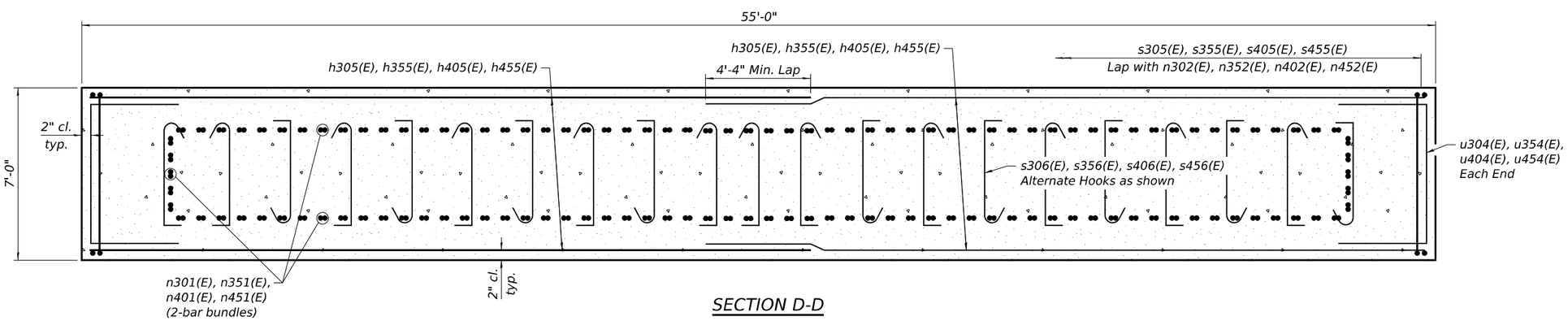

SECTION D-D

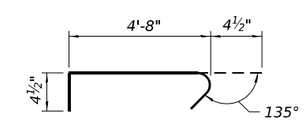

BARS s306(E), s356(E), s406(E), s456(E)

NOTES:

1. Space reinforcement in cap to miss anchor bolts.

WSP USA Inc.
30 N. LASALLE STREET
SUITE 4200
CHICAGO, IL 60602
TEL: (312) 782-8150
FAX: (312) 782-1684

USER NAME = USSJ696614	DESIGNED - PSK	REVISED -	
	CHECKED - MAI	REVISED -	
PLOT SCALE = 10.0000 ' / in.	DRAWN - PSK	REVISED -	
PLOT DATE = 11/5/2025	CHECKED - PJL	REVISED -	

STATE OF ILLINOIS
DEPARTMENT OF TRANSPORTATION

PIER 3 & 4 DETAILS 1
STRUCTURE NUMBER 099-8309 WB AND 099-8325 EB

SHEET S-284 OF S-333 SHEETS

F.A.I RTE.	SECTION	COUNTY	TOTAL SHEETS	SHEET NO.
I-80	FAI 80 21 STRUCTURE 2	WILL	1230	865
		CONTRACT NO. 62R23		
		ILLINOIS	FED. AID PROJECT	

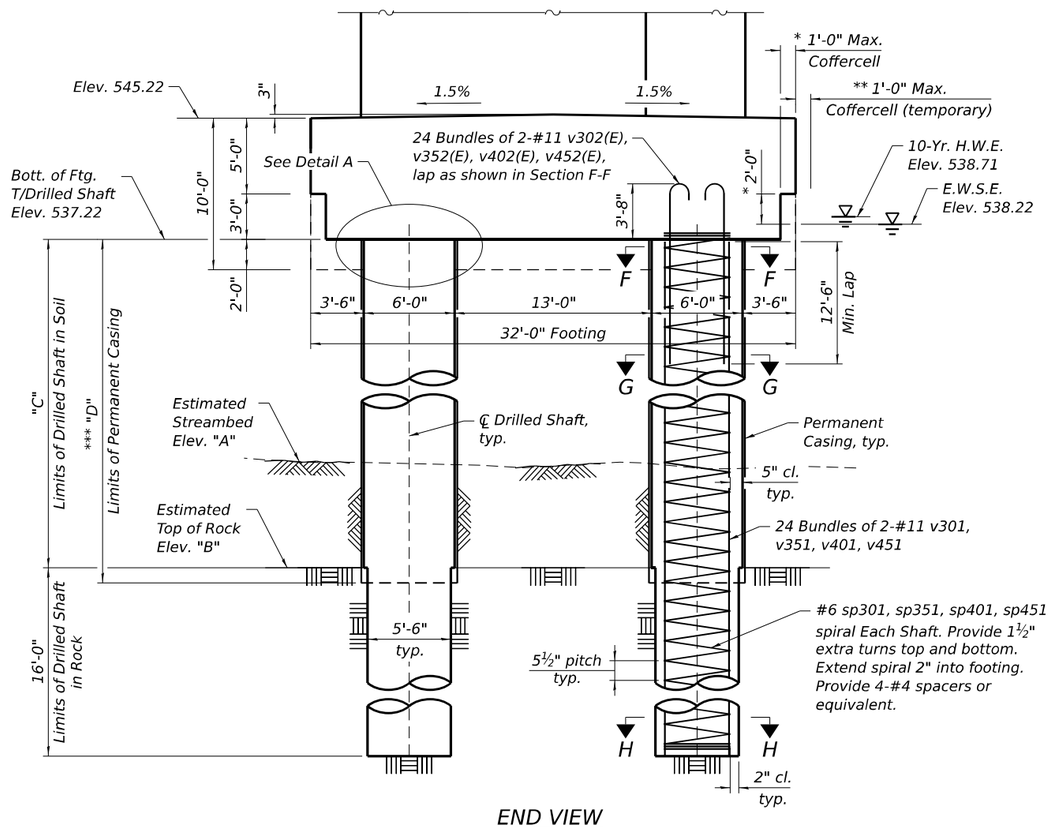

END VIEW

Location	Elev. "A"	Elev. "B"	Dim. "C"	Dim. "D"	v-bar	spiral
Pier 3 WB	516.75	510.20	27'-0¼"	28'-0¼"	v301, v302(E)	sp301
Pier 3 EB	519.50	509.30	27'-11"	28'-11"	v351, v352(E)	sp351
Pier 4 WB	512.25	511.00	26'-2⅝"	27'-2⅝"	v401, v402(E)	sp401
Pier 4 EB	512.75	511.00	26'-2⅝"	27'-2⅝"	v451, v452(E)	sp451

* Contractor shall modify details as necessary if formwork dimensions vary from those shown on these plans. See Coffercell Special Provisions.

** Temporary formwork may extend beyond the limits of the permanent footing as shown.

*** Contractor is responsible for determining the casing thickness and the actual tip elevation to be used. See Article 516.06(d) of the Standard Specifications. Pay limits for Permanent Casing shall be based on the minimum length shown.

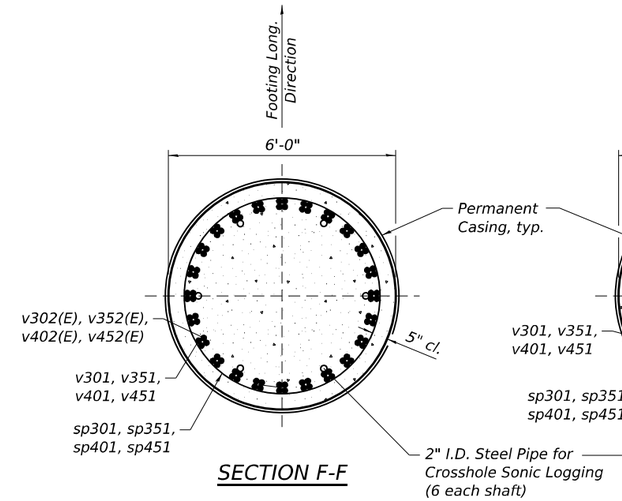

SECTION F-F

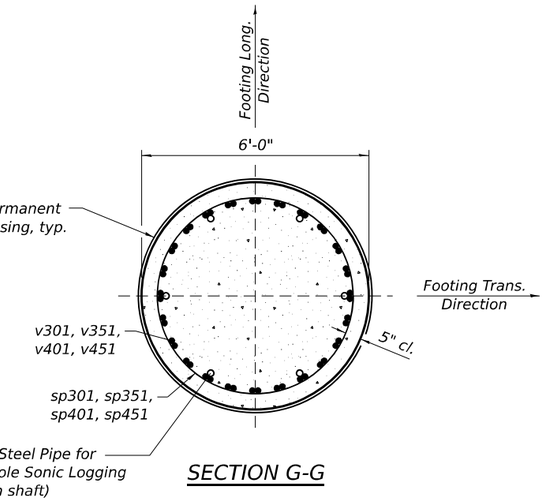

SECTION G-G

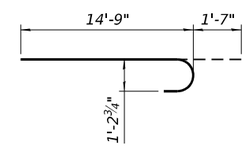

BARS v302(E), v352(E), v402(E), v452(E)

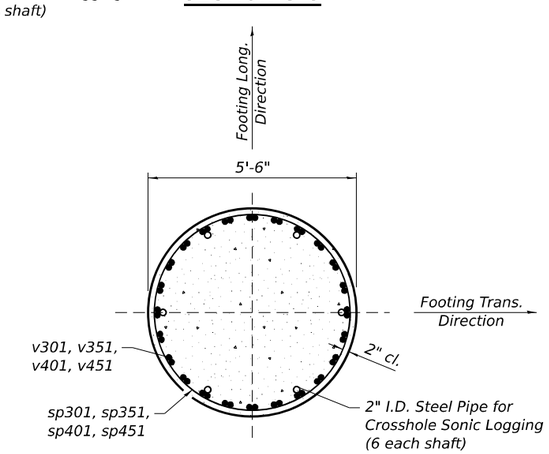

SECTION H-H

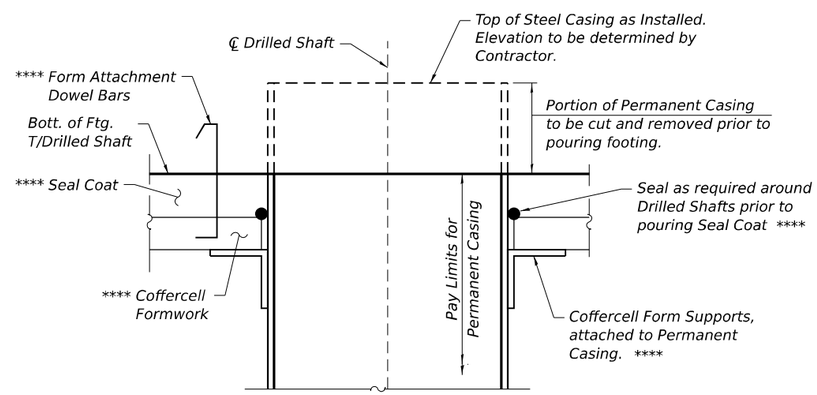

DETAIL A

**** Type and method to be determined by Contractor. See Coffercell Special Provision.

NOTES:

1. E.W.S.E. denotes Estimated High Water Elevation.
2. Contractor shall seal around the drilled shaft casings or provide seal coat between bottom of footing and coffercell to ensure a sealed, dry coffercell. See Coffercell Special Provision.
3. The quantities and reinforcement detailing are based on the top of shaft and the estimated top of rock elevations shown and may change based on the actual top of rock encountered at each shaft and the final top of shaft elevation.
4. Minimum lap for spirals = 3'-0".

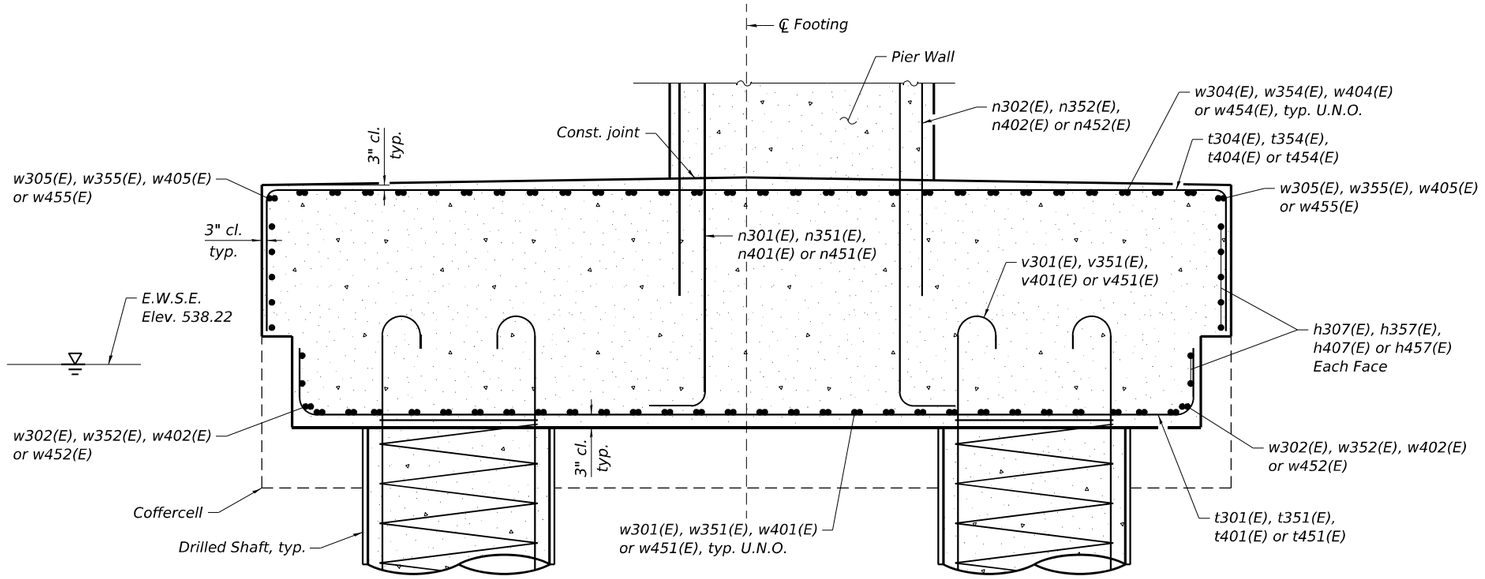

FOOTING TRANSVERSE SECTION

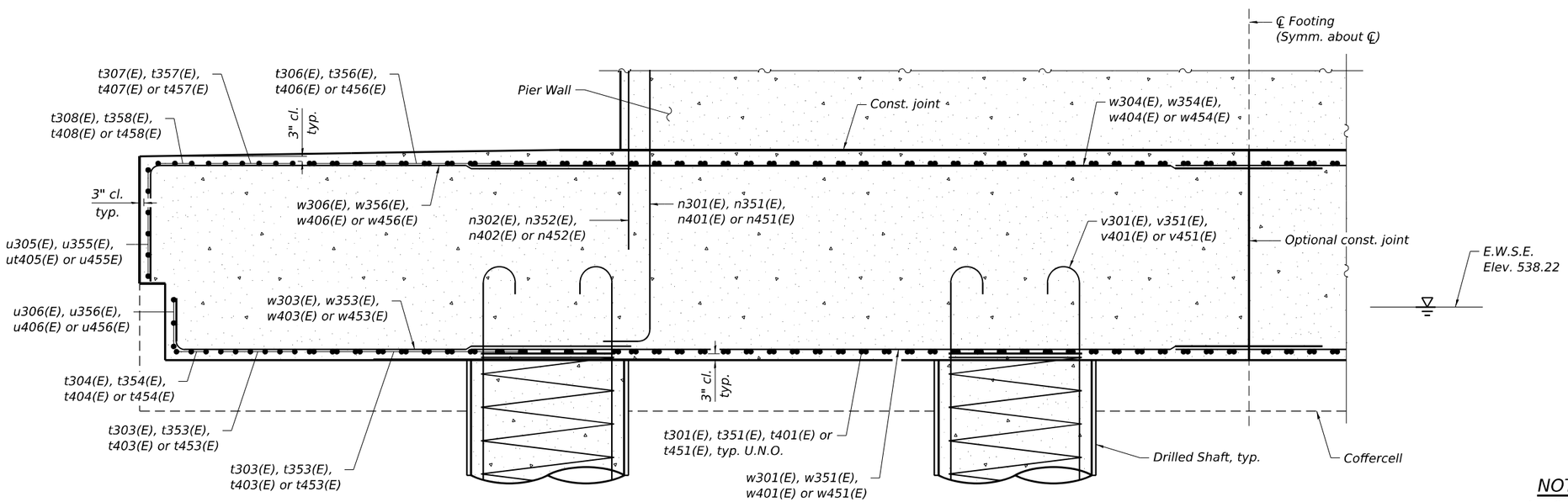

FOOTING PARTIAL LONGITUDINAL SECTION

NOTES:

1. See sheet S-285 for End View and Coffercell details.
2. See sheet S-287 for Bill of Material.

WSP USA Inc.
30 N. LASALLE STREET
SUITE 4200
CHICAGO, IL 60602
TEL: (312) 782-8150
FAX: (312) 782-1684

USER NAME = USSJ696614	DESIGNED - PSK	REVISED -	
	CHECKED - MAI	REVISED -	
PLOT SCALE = 5:0.0000 ':" / in.	DRAWN - PSK	REVISED -	
PLOT DATE = 11/5/2025	CHECKED - PJL	REVISED -	

STATE OF ILLINOIS
DEPARTMENT OF TRANSPORTATION

PIER 3 & 4 DETAILS 3
STRUCTURE NUMBER 099-8309 WB AND 099-8325 EB

SHEET S-286 OF S-333 SHEETS

F.A.I RTE.	SECTION	COUNTY	TOTAL SHEETS	SHEET NO.
I-80	FAI 80 21 STRUCTURE 2	WILL	1230	867
		CONTRACT NO. 62R23		
	ILLINOIS	FED. AID PROJECT		

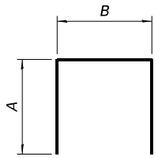

A & B DIMENSIONS

Bar Names	A	B
s302(E), s352(E), s402(E), s452(E)	7'-4"	6'-8"
s303(E), s353(E), s403(E), s453(E)	6'-3"	6'-8"
s304(E), s354(E), s404(E), s454(E)	5'-8"	6'-8"
s305(E), s355(E), s405(E), s455(E)	9'-7"	6'-8"
s307(E), s357(E), s407(E), s457(E)	1'-2"	7'-6"
u301(E), u351(E), u401(E), u451(E)	2'-9"	6'-8"
u303(E), u353(E), u403(E), u453(E)	3'-7"	4'-8"
u304(E), u354(E), u404(E), u454(E)	4'-4"	6'-6"
t301(E), t351(E), t401(E), t451(E)	2'-0"	29'-6"
t305(E), t355(E), t405(E), t455(E)	4'-6"	31'-6"

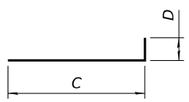

C & D DIMENSIONS

Bar Names	C	D
n301(E), n351(E), n401(E), n451(E)	28'-1"	2'-0"
p301(E), p351(E), p401(E), p451(E)	32'-7"	2'-0"
p305(E), p355(E), p405(E), p455(E)	20'-10"	2'-9"
t302(E), t352(E), t402(E), t452(E)	20'-1"	1'-5"
t303(E), t353(E), t403(E), t453(E)	13'-0"	1'-2"
t304(E), t354(E), t404(E), t454(E)	9'-5"	1'-2"
t306(E), t356(E), t406(E), t456(E)	18'-8"	4'-6"
t307(E), t357(E), t407(E), t457(E)	13'-10"	4'-6"
t308(E), t358(E), t408(E), t458(E)	11'-4"	4'-6"
w302(E), w352(E), w402(E), w452(E)	35'-2"	1'-4"
w303(E), w353(E), w403(E), w453(E)	12'-6"	1'-2"
w305(E), w355(E), w405(E), w455(E)	35'-6"	4'-6"
w306(E), w356(E), w406(E), w456(E)	13'-2"	4'-6"

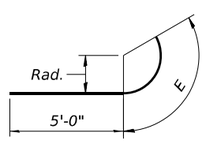

RAD. & E DIMENSIONS

Bar Names	RAD.	E
u305(E), u355(E), u405(E), u455(E)	15'-8"	27'-6"
u306(E), u356(E), u406(E), u456(E)	14'-8"	25'-8"

BILL OF MATERIAL - PIER 3 WB

Bar	No.	Size	Length	Shape
h301(E)	48	#6	36'-3"	
h302(E)	24	#6	35'-4"	
h303(E)	48	#8	15'-9"	
h304(E)	200	#5	26'-2"	
h305(E)	84	#6	29'-6"	
n301(E)	252	#11	30'-1"	
n302(E)	222	#6	8'-8"	
p301(E)	56	#11	34'-7"	
p302(E)	14	#11	38'-0"	
p303(E)	20	#8	14'-1"	
p304(E)	20	#6	13'-4"	
p305(E)	16	#5	23'-7"	
s301(E)	65	#6	34'-5"	
s302(E)	192	#6	21'-4"	
s303(E)	96	#6	19'-2"	
s304(E)	36	#6	18'-0"	
s305(E)	222	#6	26'-4"	
s306(E)	864	#4	5'-5"	
s307(E)	204	#7	9'-10"	
* sp301	8	#6	43'-3"	
t301(E)	116	#11	33'-6"	
t302(E)	80	#9	21'-6"	
t303(E)	24	#7	14'-2"	
t304(E)	12	#7	10'-7"	
t305(E)	58	#8	40'-6"	
t306(E)	40	#8	23'-2"	
t307(E)	24	#7	18'-4"	
t308(E)	12	#7	14'-8"	
u301(E)	39	#5	12'-2"	
u302(E)	20	#6	18'-11"	
u303(E)	100	#5	11'-10"	
u304(E)	42	#6	15'-2"	
u305(E)	24	#7	32'-6"	
u306(E)	12	#7	30'-8"	
v301	384	#11	43'-1"	
v302(E)	384	#11	16'-4"	
v303(E)	252	#10	30'-10"	
w301(E)	112	#8	40'-8"	
w302(E)	8	#8	36'-6"	
w303(E)	56	#7	13'-8"	
w304(E)	120	#9	40'-0"	
w305(E)	8	#9	40'-0"	
w306(E)	60	#7	17'-8"	
w307(E)	28	#7	30'-0"	
Concrete Structures			Cu. Yd.	1,879.4
Reinforcement Bars			Pound	106,890
Reinforcement Bars, Epoxy Coated			Pound	247,770
Permanent Casing			Foot	224
Drilled Shaft in Soil			Cu. Yd.	226.4
Drilled Shaft in Rock			Cu. Yd.	112.6
Crosshole Sonic Logging Access Ducts			Foot	345
Crosshole Sonic Logging Testing			Each	8
Thermal Integrity Profile Testing			Each	8
Thermal Integrity Profile Data Collection			Foot	345
Coffercell (Location - 1)			Each	1

BILL OF MATERIAL - PIER 3 EB

Bar	No.	Size	Length	Shape
h351(E)	48	#6	36'-3"	
h352(E)	24	#6	35'-4"	
h353(E)	48	#8	15'-9"	
h354(E)	200	#5	26'-2"	
h355(E)	84	#6	29'-6"	
n351(E)	252	#11	30'-1"	
n352(E)	222	#6	8'-8"	
p351(E)	56	#11	34'-7"	
p352(E)	14	#11	38'-0"	
p353(E)	20	#8	14'-1"	
p354(E)	20	#6	13'-4"	
p355(E)	16	#5	23'-7"	
s351(E)	65	#6	34'-5"	
s352(E)	192	#6	21'-4"	
s353(E)	96	#6	19'-2"	
s354(E)	36	#6	18'-0"	
s355(E)	222	#6	26'-4"	
s356(E)	864	#4	5'-5"	
s357(E)	204	#7	9'-10"	
* sp351	8	#6	44'-1"	
t351(E)	116	#11	33'-6"	
t352(E)	80	#9	21'-6"	
t353(E)	24	#7	14'-2"	
t354(E)	12	#7	10'-7"	
t355(E)	58	#8	40'-6"	
t356(E)	40	#8	23'-2"	
t357(E)	24	#7	18'-4"	
t358(E)	12	#7	14'-8"	
u351(E)	39	#5	12'-2"	
u352(E)	20	#6	18'-11"	
u353(E)	100	#5	11'-10"	
u354(E)	42	#6	15'-2"	
u355(E)	24	#7	32'-6"	
u356(E)	12	#7	30'-8"	
v351	384	#11	43'-11"	
v352(E)	384	#11	16'-4"	
v353(E)	252	#10	30'-10"	
w351(E)	112	#8	40'-8"	
w352(E)	8	#8	36'-6"	
w353(E)	56	#7	13'-8"	
w354(E)	120	#9	40'-0"	
w355(E)	8	#9	40'-0"	
w356(E)	60	#7	17'-8"	
w357(E)	28	#7	30'-0"	
Concrete Structures			Cu. Yd.	1,877.9
Reinforcement Bars			Pound	108,950
Reinforcement Bars, Epoxy Coated			Pound	247,780
Permanent Casing			Foot	231
Drilled Shaft in Soil			Cu. Yd.	233.9
Drilled Shaft in Rock			Cu. Yd.	112.6
Crosshole Sonic Logging Access Ducts			Foot	352
Crosshole Sonic Logging Testing			Each	8
Thermal Integrity Profile Testing			Each	8
Thermal Integrity Profile Data Collection			Foot	352
Coffercell (Location - 2)			Each	1

BILL OF MATERIAL - PIER 4 WB

Bar	No.	Size	Length	Shape
h401(E)	48	#6	36'-3"	
h402(E)	24	#6	35'-4"	
h403(E)	48	#8	15'-9"	
h404(E)	164	#5	26'-2"	
h405(E)	84	#6	29'-6"	
n401(E)	252	#11	30'-1"	
n402(E)	222	#6	8'-8"	
p401(E)	56	#11	34'-7"	
p402(E)	14	#11	38'-0"	
p403(E)	20	#8	14'-1"	
p404(E)	20	#6	13'-4"	
p405(E)	16	#5	23'-7"	
s401(E)	65	#6	34'-5"	
s402(E)	192	#6	21'-4"	
s403(E)	96	#6	19'-2"	
s404(E)	36	#6	18'-0"	
s405(E)	222	#6	26'-4"	
s406(E)	744	#4	5'-5"	
s407(E)	204	#7	9'-10"	
* sp401	8	#6	42'-5"	
t401(E)	116	#11	33'-6"	
t402(E)	80	#9	21'-6"	
t403(E)	24	#7	14'-2"	
t404(E)	12	#7	10'-7"	
t405(E)	58	#8	40'-6"	
t406(E)	40	#8	23'-2"	
t407(E)	24	#7	18'-4"	
t408(E)	12	#7	14'-8"	
u401(E)	39	#5	12'-2"	
u402(E)	20	#6	18'-11"	
u403(E)	82	#5	11'-10"	
u404(E)	42	#6	15'-2"	
u405(E)	24	#7	32'-6"	
u406(E)	12	#7	30'-8"	
v401	384	#11	42'-2"	
v402(E)	384	#11	16'-4"	
v403(E)	252	#10	26'-4"	
w401(E)	112	#8	40'-8"	
w402(E)	8	#8	36'-6"	
w403(E)	56	#7	13'-8"	
w404(E)	120	#9	40'-0"	
w405(E)	8	#9	40'-0"	
w406(E)	60	#7	17'-8"	
w407(E)	28	#7	30'-0"	
Concrete Structures			Cu. Yd.	1,838.8
Reinforcement Bars			Pound	104,680
Reinforcement Bars, Epoxy Coated			Pound	241,250
Permanent Casing			Foot	218
Drilled Shaft in Soil			Cu. Yd.	219.7
Drilled Shaft in Rock			Cu. Yd.	112.6
Crosshole Sonic Logging Access Ducts			Foot	338
Crosshole Sonic Logging Testing			Each	8
Thermal Integrity Profile Testing			Each	8
Thermal Integrity Profile Data Collection			Foot	338
Coffercell (Location - 3)			Each	1

BILL OF MATERIAL - PIER 4 EB

Bar	No.	Size	Length	Shape
h451(E)	48	#6	36'-3"	
h452(E)	24	#6	35'-4"	
h453(E)	48	#8	15'-9"	
h454(E)	168	#5	26'-2"	
h455(E)	84	#6	29'-6"	
n451(E)	252	#11	30'-1"	
n452(E)	222	#6	8'-8"	
p451(E)	56	#11	34'-7"	
p452(E)	14	#11	38'-0"	
p453(E)	20	#8	14'-1"	
p454(E)	20	#6	13'-4"	
p455(E)	16	#5	23'-7"	
s451(E)	65	#6	34'-5"	
s452(E)	192	#6	21'-4"	
s453(E)	96	#6	19'-2"	
s454(E)	36	#6	18'-0"	
s455(E)	222	#6	26'-4"	
s456(E)	768	#4	5'-5"	
s457(E)	204	#7	9'-10"	
* sp451	8	#6	42'-5"	
t451(E)	116	#11	33'-6"	
t452(E)	80	#9	21'-6"	
t453(E)	24	#7	14'-2"	
t454(E)	12	#7	10'-7"	
t455(E)	58	#8	40'-6"	
t456(E)	40	#8	23'-2"	
t457(E)	24	#7	18'-4"	
t458(E)	12	#7	14'-8"	
u451(E)	39	#5	12'-2"	
u452(E)	20	#6	18'-11"	
u453(E)	84	#5	11'-10"	
u454(E)	42	#6	15'-2"	
u455(E)	24	#7	32'-6"	
u456(E)	12	#7	30'-8"	
v451	384	#11	42'-2"	
v452(E)	384	#11	16'-4"	
v453(E)	252	#10	26'-11"	
w451(E)	112	#8	40'-8"	
w452(E)	8	#8	36'-6"	
w453(E)	56	#7	13'-8"	
w454(E)	120	#9	40'-0"	
w455(E)	8	#9	40'-0"	
w456(E)	60	#7	17'-8"	
w457(E)	28	#7	30'-0"	
Concrete Structures			Cu. Yd.	1,878.5
Reinforcement Bars			Pound	104,680
Reinforcement Bars, Epoxy Coated			Pound	242,110
Permanent Casing			Foot	218
Drilled Shaft in Soil			Cu. Yd.	219.7
Drilled Shaft in Rock			Cu. Yd.	112.6
Crosshole Sonic Logging Access Ducts			Foot	338
Crosshole Sonic Logging Testing			Each	8
Thermal Integrity Profile Testing			Each	8
Thermal Integrity Profile Data Collection			Foot	338
Coffercell (Location - 4)			Each	1

* Length is height of spiral.

BEARING SEAT ELEVATIONS

West Bearings			East Bearings		
Girder	Elevation	Step Ht.	Girder	Elevation	Step Ht.
W1	580.28		W1	583.70	
		2¼"			5⅛"
W2	580.47		W2	584.13	
		2¼"			2⅜"
W3	580.66		W3	584.33	
		1⅞"			2⅛"
W4	580.81		W4	584.51	
		0"			0"
W5	580.81		W5	584.51	
		1⅞"			2⅛"
W6	580.66		W6	584.33	
		2¼"			1⅞"
W7	580.47		W7	584.17	
		2¼"			2⅝"
W8	580.28		W8	583.95	

* Girder Spacing
** Step Spacing
*** See Anchor Bolt Layout Detail on this sheet, typ.

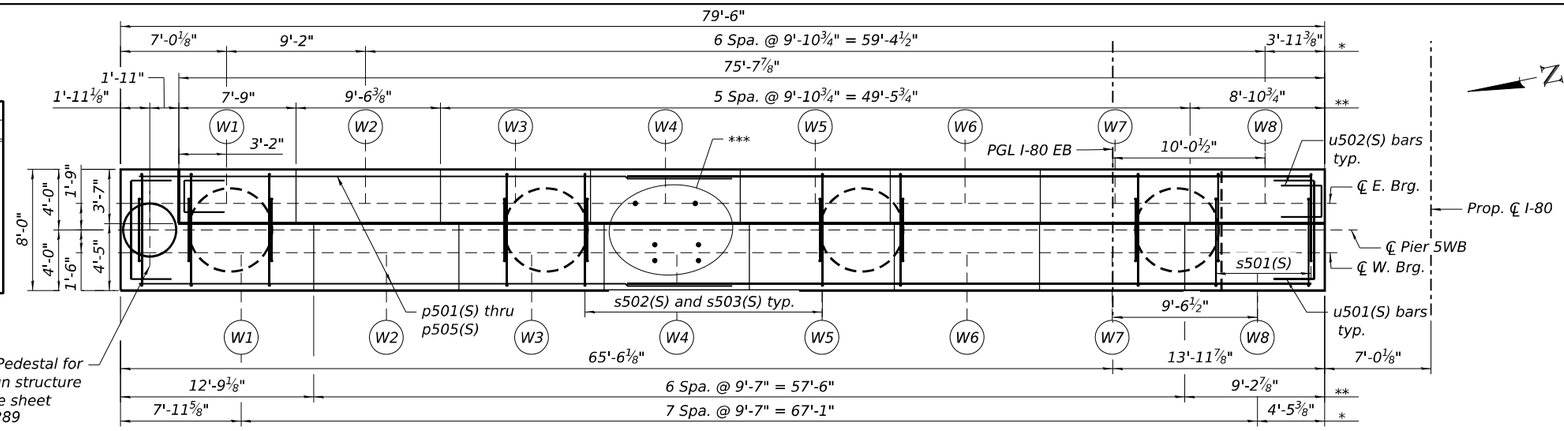

TOP PLAN

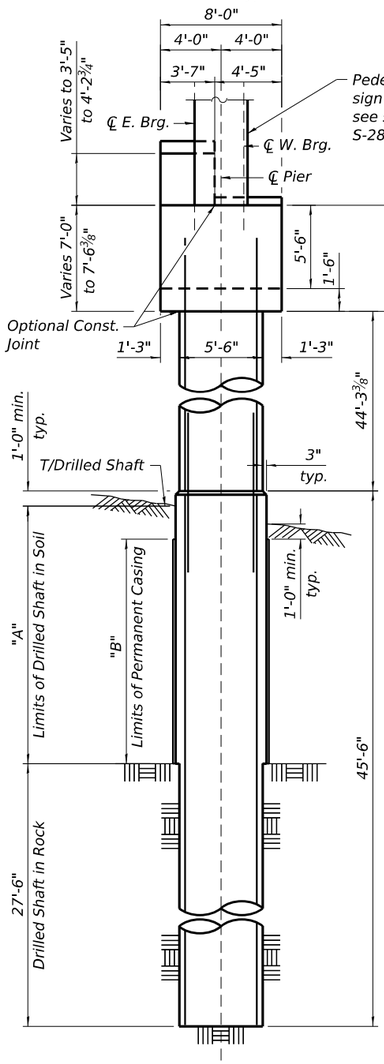

END VIEW

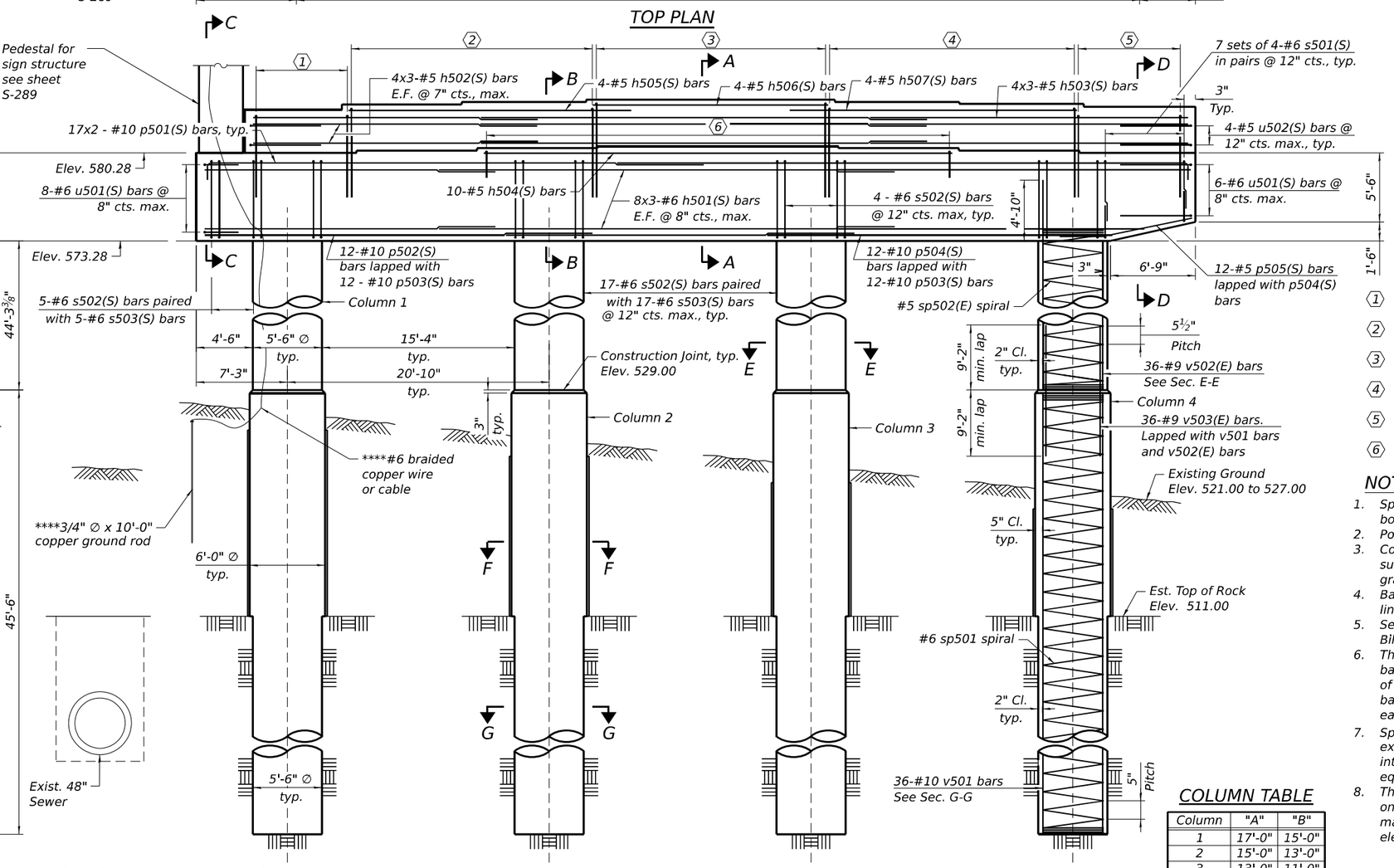

ELEVATION
(Looking East)

**** Cost of rod, cable and clamps included in the cost of Concrete Structures

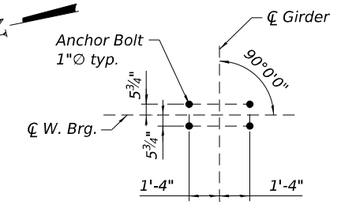

ANCHOR BOLT LAYOUT
(W. Brg.)

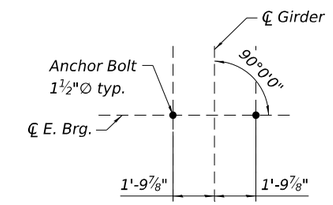

ANCHOR BOLT LAYOUT
(E. Brg.)

MINIMUM BAR LAP

#5 bar (Horiz.) = 3'-7"
#6 bar (Horiz.) = 4'-4"
#6 bar (Vert.) = 3'-10"
#9 bar (Vert.) = 9'-2"
#10 bar (Horiz.) = 8'-9"
#10 bar (Vert.) = 10'-2"

1. 8-#5 u504(S) bars @ 12" cts. max., E. Brg.
2. 20-#5 u505 (S) bars @ 12" cts. max., E. Brg.
3. 20-#5 u506 (S) bars @ 12" cts. max., E. Brg.
4. 20-#5 u507(S) bars @ 12" cts. max., E. Brg.
5. 9-#5 u508 (S) bars @ 12" cts. max., E. Brg.
6. 40-#5 u503(S) bars @ 12" cts. max., W. Brg.

NOTES:

1. Space reinforcement in cap to miss anchor bolts.
2. Pour steps monolithically with cap.
3. Concrete Sealer shall be applied to exposed surfaces of Pier cap, seats, and columns above grade.
4. Bars indicated thus 10x2-#10 etc. indicate 10 lines of bars with 2 segments per line.
5. See sheet S-289 for Sections A-A thru G-G, and Bill of Material.
6. The quantities of reinforcement detailing are based on the top of shaft and the estimated top of rock elevations shown and may change based on the actual top of rock encountered at each shaft and the final top of shaft elevation.
7. Spiral reinforcement shall be provided with 1½ extra turns at each end, and extend spiral 2" into pier cap. Provide min. 4-#4 spacers or equivalent.
8. The quantities of permanent casing are based on estimated existing ground elevations and may change based on the actual ground elevations encountered.

COLUMN TABLE

Column	"A"	"B"
1	17'-0"	15'-0"
2	15'-0"	13'-0"
3	13'-0"	11'-0"
4	11'-0"	9'-0"

WSP USA Inc.
30 N. LASALLE STREET
SUITE 4200
CHICAGO, IL 60602
TEL: (312) 782-8150
FAX: (312) 782-1684

USER NAME = USSJ696614	DESIGNED - KB	REVISED -	
	CHECKED - PJL	REVISED -	
PLOT SCALE = 0:2 ':' / in.	DRAWN - GM	REVISED -	
PLOT DATE = 11/5/2025	CHECKED - KB	REVISED -	

STATE OF ILLINOIS
DEPARTMENT OF TRANSPORTATION

PIER 5 WB
STRUCTURE NUMBER 099-8309 WB AND 099-8325 EB

SHEET S-288 OF S-333 SHEETS

F.A.I RTE.	SECTION	COUNTY	TOTAL SHEETS	SHEET NO.
I-80	FAI 80 21 STRUCTURE 2	WILL	1230	869
		CONTRACT NO. 62R23		
		ILLINOIS	FED. AID PROJECT	

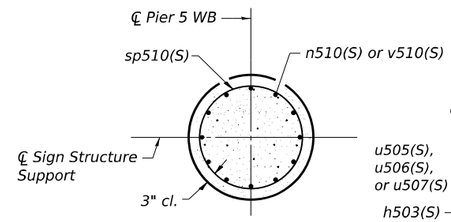

SECTION H-H

3'-6" Ø

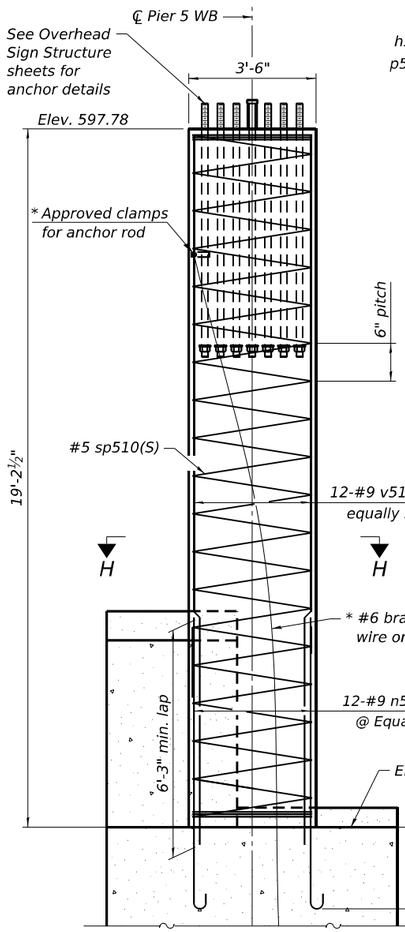

PEDESTAL ELEVATION

(Looking South)

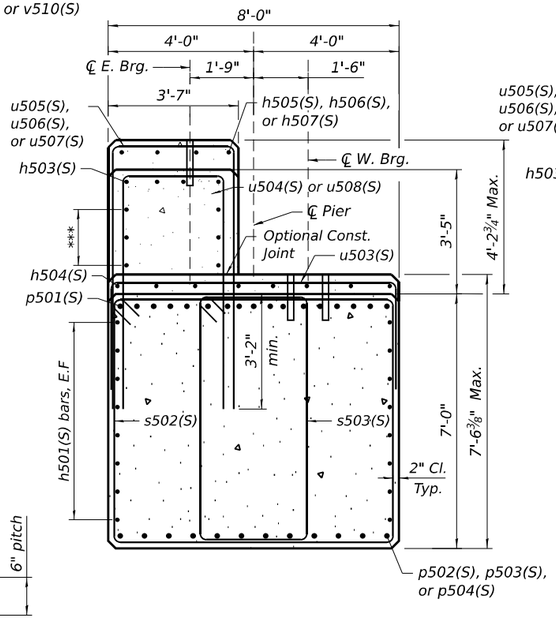

SECTION A-A

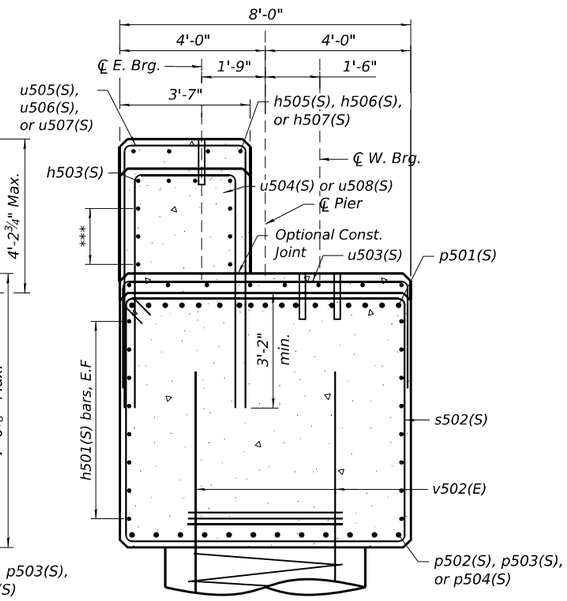

SECTION B-B

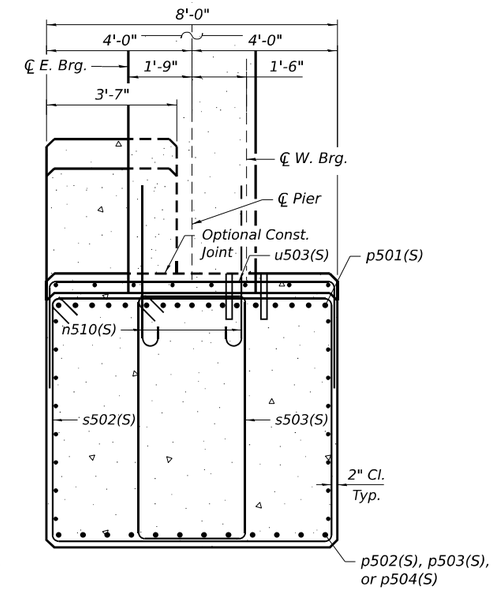

SECTION C-C

(Some bars omitted for clarity)

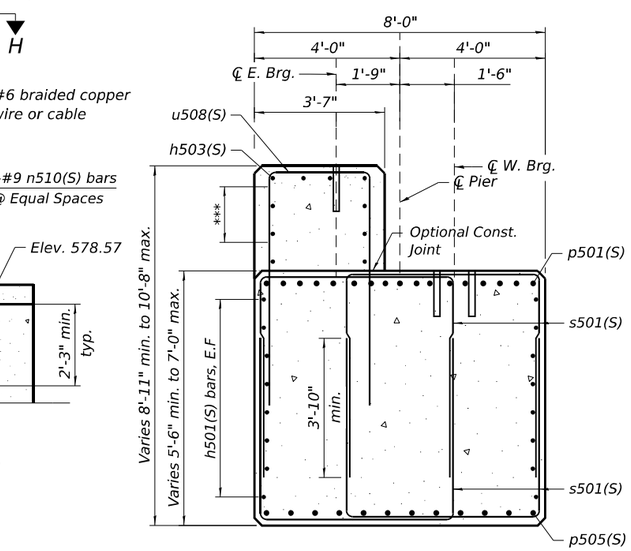

SECTION D-D

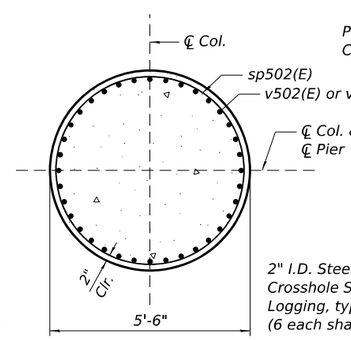

SECTION E-E

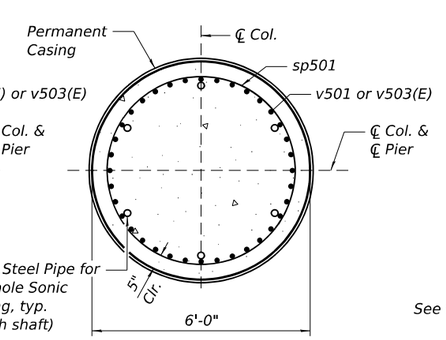

SECTION F-F

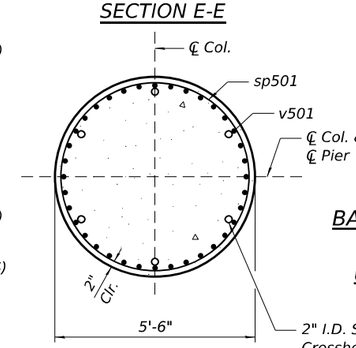

SECTION G-G

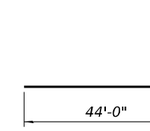

BAR p501(S)

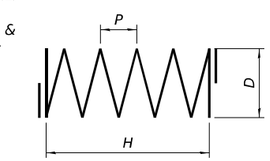

SPIRALS

See table for D, H, and P dimensions

H, D, & P DIMENSIONS

Bar	H	D	P
sp501	45'-6"	5'-2"	5"
sp502(E)	44'-5"	5'-2"	5½"
sp510(S)	19'-2"	3'-0"	6"

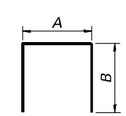

A & B DIMENSIONS

Bar	A	B
s501(S)	7'-8"	4'-10"
u501(S)	7'-6"	4'-4"
u502(S)	3'-3"	3'-7"
u503(S)	7'-8"	1'-4"
u504(S)	3'-3"	6'-5"
u505(S)	3'-3"	6'-10"
u506(S)	3'-3"	7'-3"
u507(S)	3'-3"	6'-11"
u508(S)	3'-3"	6'-8"

BARS s501(S), u501(S), u502(S), u503(S), u504(S),u505(S), u506(S), u507(S), & u508(S)

See table for A and B dimensions

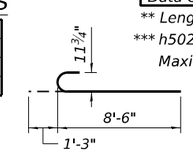

BAR n510(S)

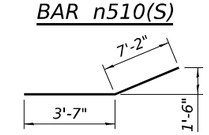

BARS p505(S)

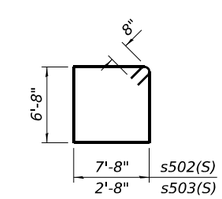

BAR s502(S) & s503(S)

BILL OF MATERIAL- PIER 5 WB

	Bar	No.	Size	Length	Shape
	h501(S)	48	#6	29'-3"	
	h502(S)	24	#5	27'-6"	
	h503(S)	12	#5	27'-6"	
	h504(S)	10	#5	38'-0"	
	h505(S)	4	#5	23'-10"	
	h506(S)	4	#5	19'-10"	
	h507(S)	4	#5	24'-2"	
	n510(S)	12	#9	9'-9"	
	p501(S)	34	#10	45'-10"	
	p502(S)	12	#10	31'-9"	
	p503(S)	12	#10	28'-6"	
	p504(S)	12	#10	24'-11"	
	p505(S)	12	#5	10'-9"	
	s501(S)	28	#6	15'-5"	
	s502(S)	72	#6	30'-0"	
	s503(S)	56	#6	20'-0"	
**	sp501	4	#6	45'-6"	
**	sp502(E)	4	#5	44'-5"	
**	sp510(S)	1	#5	19'-2"	
	u501(S)	14	#6	16'-2"	
	u502(S)	8	#5	10'-5"	
	u503(S)	40	#5	10'-4"	
	u504(S)	8	#5	16'-1"	
	u505(S)	20	#5	16'-11"	
	u506(S)	20	#5	17'-9"	
	u507(S)	20	#5	17'-1"	
	u508(S)	9	#5	16'-7"	
	v501	144	#10	45'-6"	
	v502(E)	144	#9	49'-1"	
	v503(E)	144	#9	18'-4"	
	v510(S)	12	#9	19'-0"	

Concrete Structures	Cu. Yd.	405.6
Reinforcement Bars	Pound	39,140
Reinforcement Bars, Epoxy Coated	Pound	39,780
Reinforcement Bars, Stainless Steel	Pound	24,430
Permanent Casing	Foot	48
Drilled Shaft in Soil	Cu. Yd.	58.6
Drilled Shaft in Rock	Cu. Yd.	96.8
Concrete Sealer	Sq. Ft.	6,771
Crosshole Sonic Logging Access Ducts	Foot	166
Crosshole Sonic Logging Testing	Each	4
Thermal Integrity Profile Testing	Each	4
Thermal Integrity Profile Data Collection	Foot	166

** Length is height of spiral

*** h502(S) bars, E.F.

Maximum lap for spirals = 3'-0"

* Anchor rod shall be ground or filed to bright metal at clamp and cable connection location. Cost of cable and clamps included in the cost of Concrete Structures.

WSP USA Inc.
30 N. LASALLE STREET
SUITE 4200
CHICAGO, IL 60602
TEL: (312) 782-8150
FAX: (312) 782-1684

USER NAME = USSJ696614	DESIGNED - SJJ	REVISED -	
	CHECKED - PJL	REVISED -	
PLOT SCALE = 4:2 ':" / in.	DRAWN - SJJ	REVISED -	
PLOT DATE = 11/5/2025	CHECKED - PJL	REVISED -	

STATE OF ILLINOIS
DEPARTMENT OF TRANSPORTATION

PIER 5 WB DETAILS
STRUCTURE NUMBER 099-8309 WB AND 099-8325 EB

SHEET S-289 OF S-333 SHEETS

F.A.I RTE.	SECTION	COUNTY	TOTAL SHEETS	SHEET NO.
I-80	FAI 80 21 STRUCTURE 2	WILL	1230	870
		CONTRACT NO. 62R23		
		ILLINOIS	FED. AID PROJECT	

MINIMUM BAR LAP

#5 bar (Horiz.) = 3'-7"
#6 bar (Horiz.) = 4'-4"
#6 bar (Vert.) = 3'-10"
#9 bar (Vert.) = 9'-2"
#10 bar (Horiz.) = 8'-9"
#10 bar (Vert.) = 10'-2"

* Girder Spacing
** Step Spacing

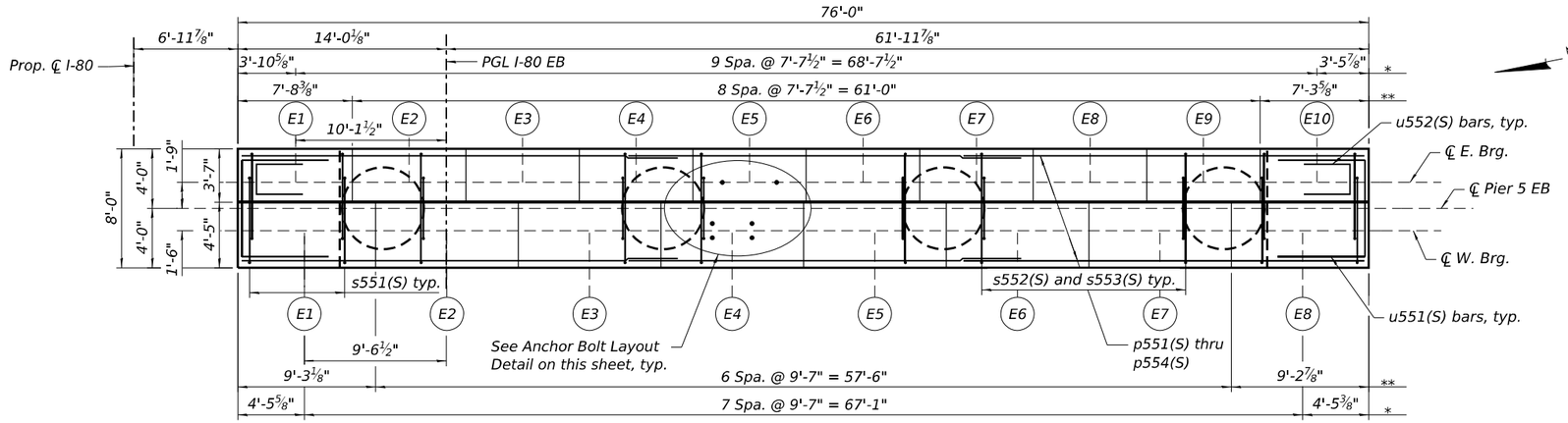

TOP PLAN

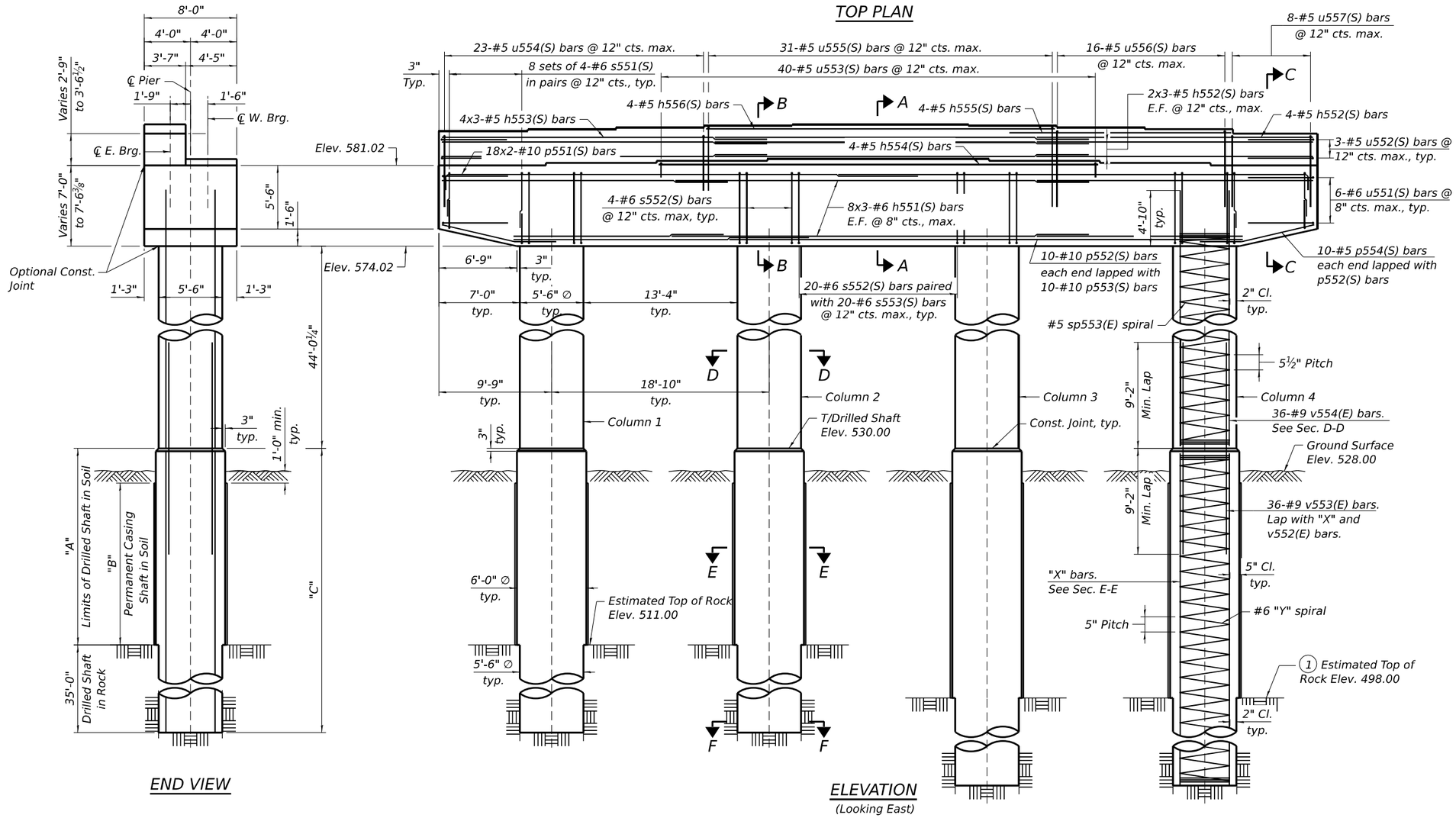

ELEVATION
(Looking East)

END VIEW

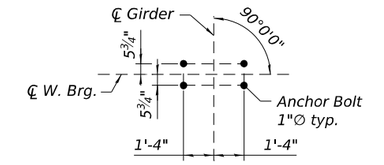

ANCHOR BOLT LAYOUT
(W. Brg.)

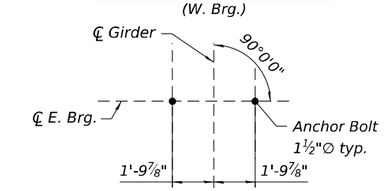

ANCHOR BOLT LAYOUT
(E. Brg.)

BEARING SEAT ELEVATIONS

West Bearings			East Bearings		
Girder	Elevation	Step Ht.	Girder	Elevation	Step Ht.
E1	581.02		E1	583.98	
		2⅜"			1⅞"
E2	581.22		E2	584.14	
		2¼"			2"
E3	581.41		E3	584.31	
		1¾"			1¾"
E4	581.56		E4	584.46	
		0"			1¼"
E5	581.56		E5	584.56	
		1¾"			0"
E6	581.41		E6	584.56	
		2¼"			1¼"
E7	581.22		E7	584.46	
		2⅜"			1¾"
E8	581.02		E8	584.31	
					2"
			E9	584.14	
					4½"
			E10	583.77	

COLUMN TABLE

Column	"A"	"B"	"C"	"X"	"Y"
1-2	19'-0"	16'-0"	54'-0"	36-#10 v551	sp551
3-4	32'-0"	29'-0"	67'-0"	36x2-#10 v552	sp552

NOTES:

1. Space reinforcement in cap to miss anchor bolts.
2. Pour steps monolithically with cap.
3. Concrete Sealer shall be applied to exposed surfaces of Pier cap, seats, and columns above grade.
4. Bars indicated thus 10x2-#10 etc. indicate 10 lines of bars with 2 segments per line.
5. See sheet S-291 for footing plan, Sections A-A thru F-F, and Bill of Material.
6. The quantities of reinforcement detailing are based on the top of shaft and the estimated top of rock elevations shown and may change based on the actual top of rock encountered at each shaft and the final top of shaft elevation.
7. Spiral reinforcement shall be provided with 1½ extra turns at each end, and extend spiral 2" into pier cap. Provide min. 4-#4 spacers or equivalent.
8. The quantities of permanent casing are based on estimated existing ground elevations and may change based on the actual ground elevations encountered.

1 Rock Elevation shall be field verified due to significantly lower rock elevation discovered in BSB-14.

WSP USA Inc.
30 N. LASALLE STREET
SUITE 4200
CHICAGO, IL 60602
TEL: (312) 782-8150
FAX: (312) 782-1684

USER NAME = USSJ696614	DESIGNED - KB	REVISED -	
	CHECKED - PJL	REVISED -	
PLOT SCALE = 0:2 ':" / in.	DRAWN - GM	REVISED -	
PLOT DATE = 11/5/2025	CHECKED - KB	REVISED -	

STATE OF ILLINOIS
DEPARTMENT OF TRANSPORTATION

PIER 5 EB
STRUCTURE NUMBER 099-8309 WB AND 099-8325 EB

SHEET S-290 OF S-333 SHEETS

F.A.I RTE.	SECTION	COUNTY	TOTAL SHEETS	SHEET NO.
I-80	FAI 80 21 STRUCTURE 2	WILL	1230	871
		CONTRACT NO. 62R23		
		ILLINOIS	FED. AID PROJECT	

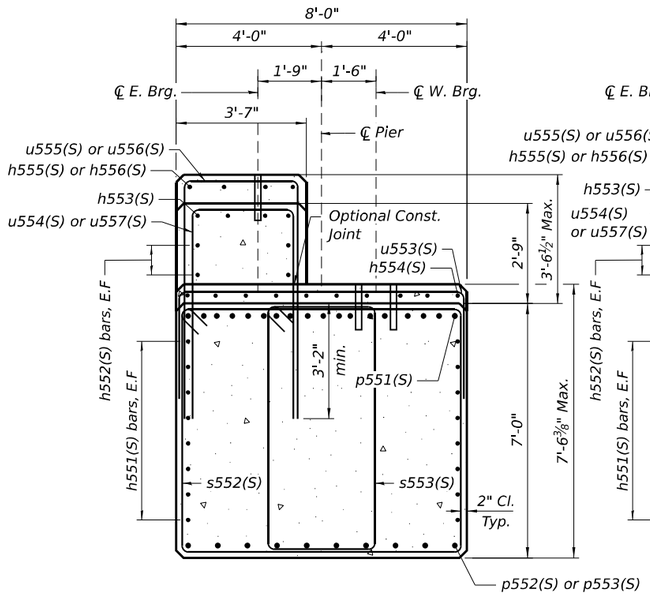

SECTION A-A

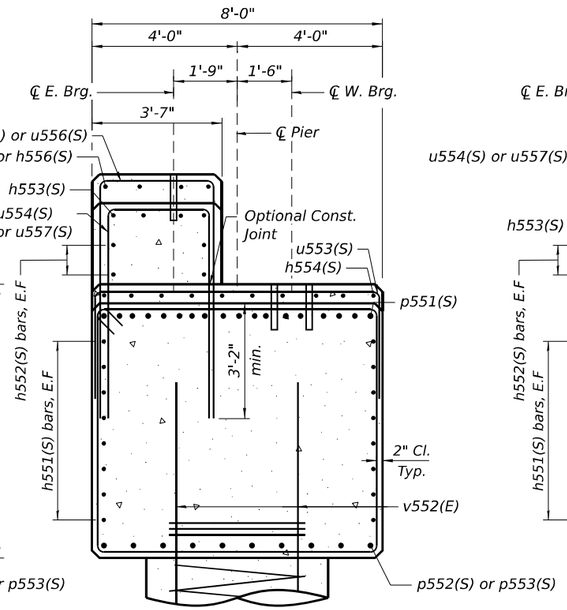

SECTION B-B

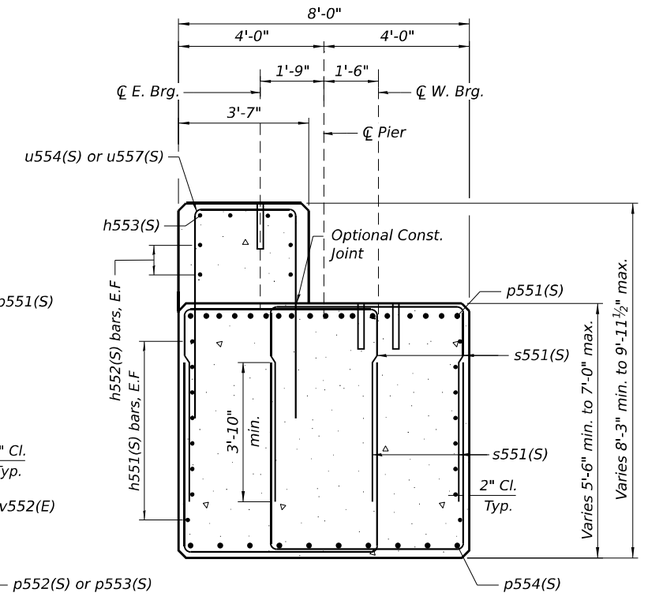

SECTION C-C

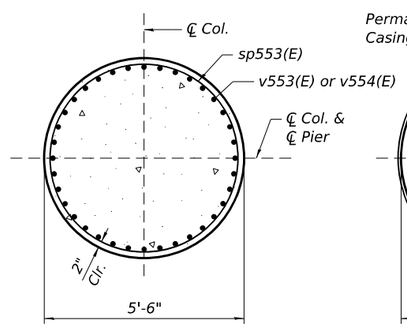

SECTION D-D

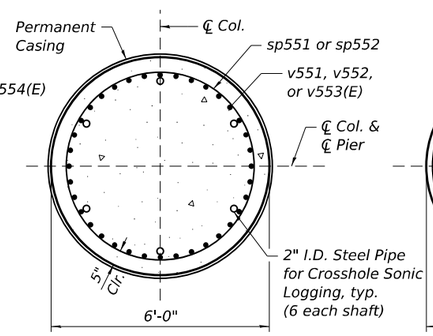

SECTION E-E

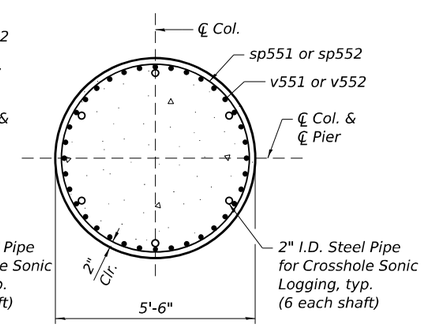

SECTION F-F

BILL OF MATERIAL - PIER 5 EB

	Bar	No.	Size	Length	Shape
	h551(S)	48	#6	28'-2"	
	h552(S)	12	#5	27'-8"	
	h553(S)	12	#5	27'-8"	
	h554(S)	4	#5	38'-0"	
	h555(S)	4	#5	19'-7"	
	h556(S)	4	#5	30'-2"	
	p551(S)	36	#10	44'-1"	
	p552(S)	20	#10	25'-8"	
	p553(S)	10	#10	26'-6"	
	p554(S)	20	#5	10'-5"	
	s551(S)	64	#6	14'-10"	
	s552(S)	76	#6	30'-0"	
	s553(S)	60	#6	18'-2"	
**	sp551	2	#6	54'-0"	
**	sp552	2	#6	67'-0"	
**	sp553(E)	4	#5	44'-2"	
	u551(S)	12	#6	16'-2"	
	u552(S)	6	#5	10'-3"	
	u553(S)	40	#5	10'-4"	
	u554(S)	23	#5	15'-3"	
	u555(S)	31	#5	16'-1"	
	u556(S)	16	#5	15'-5"	
	u557(S)	8	#5	14'-9"	
	v551	72	#10	54'-0"	
	v552	144	#10	38'-7"	
	v553(E)	144	#9	18'-4"	
	v554(E)	144	#9	48'-8"	
	Concrete Structures			Cu. Yd.	361.8
	Reinforcement Bars			Pound	55,100
	Reinforcement Bars, Epoxy Coated			Pound	39,540
	Reinforcement Bars, Stainless Steel			Pound	22,010
	Permanent Casing			Foot	90
	Drilled Shaft in Soil			Cu. Yd.	106.8
	Drilled Shaft in Rock			Cu. Yd.	123.2
	Concrete Sealer			Sq. Ft.	3,269
	Crosshole Sonic Logging Access Ducts			Foot	242
	Crosshole Sonic Logging Testing			Each	4
	Thermal Integrity Profile Testing			Each	4
	Thermal Integrity Profile Data Collection			Foot	242

** Length is height of spiral.
Maximum lap for spirals = 3'-0"

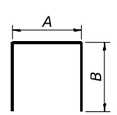

BARS s551(S), u551(S), u552(S), u553(S), u554(S), u555(S), u556(S) & u557(S)

See table for A and B dimensions

A & B DIMENSIONS

Bar	A	B
s551(S)	4'-8"	5'-1"
u551(S)	7'-6"	4'-4"
u552(S)	3'-3"	3'-7"
u553(S)	7'-8"	1'-4"
u554(S)	3'-3"	6'-0"
u555(S)	3'-3"	6'-5"
u556(S)	3'-3"	6'-1"
u557(S)	3'-3"	5'-9"

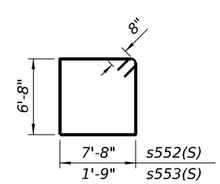

BAR s552(S) & s553(S)

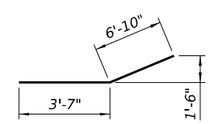

BAR p554(S)

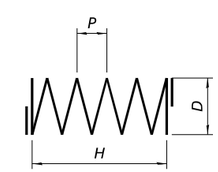

SPIRALS

See table for D, H, and P dimensions

H, D & P DIMENSIONS

Bar	H	D	P
sp551	54'-0"	5'-2"	5"
sp552	67'-0"	5'-2"	5"
sp553(E)	44'-2"	5'-2"	5½"

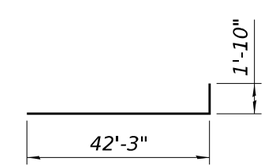

BARS p551(S)

MINIMUM BAR LAP

#5 bar (Horiz.) = 3'-7"
#6 bar (Horiz.) = 4'-4"
#6 bar (Vert.) = 3'-10"
#9 bar (Vert.) = 9'-2"
#10 bar (Horiz.) = 8'-9"
#10 bar (Vert.) = 7'-8"

* Alternate locations of laps Lt./Rt. within each row so that no two adjacent bars are lapped at the same location.

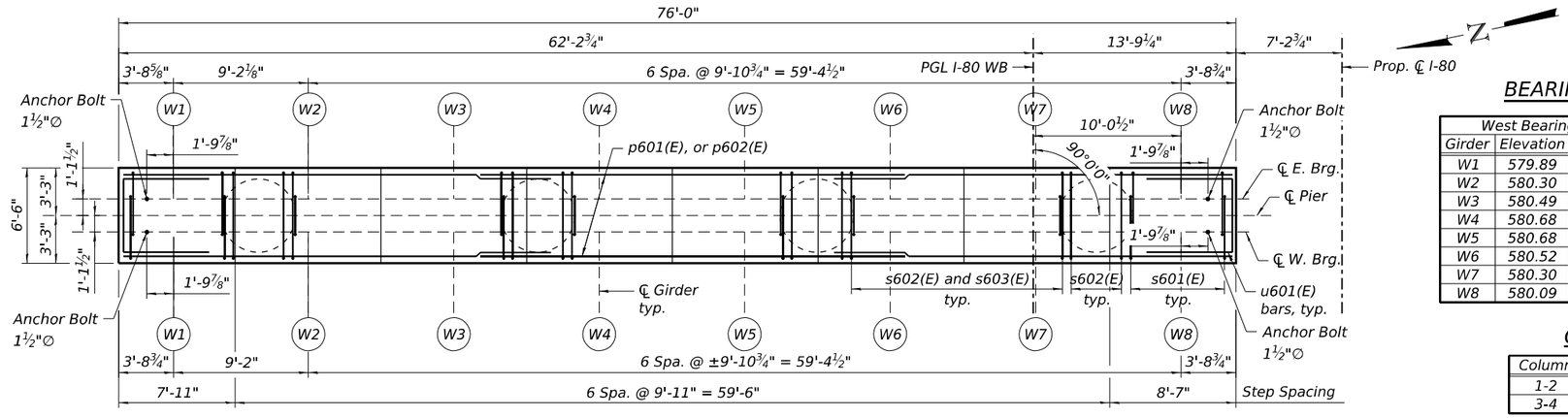

BEARING SEAT ELEVATIONS

West Bearings			East Bearings		
Girder	Elevation	Step Ht.	Girder	Elevation	Step Ht.
W1	579.89		W1	579.81	
		±5"			±5"
W2	580.30		W2	580.22	
		2¼"			2¼"
W3	580.49		W3	580.41	
		2¼"			2¼"
W4	580.68		W4	580.60	
		0"			0"
W5	580.68		W5	580.60	
		±2"			±2"
W6	580.52		W6	580.44	
		2⅝"			2⅝"
W7	580.30		W7	580.22	
		2½"			2½"
W8	580.09		W8	580.01	

COLUMN TABLE

Column	"A"	"X"	"Y"
1-2	21'-0"	v601(E)	sp601(E)
3-4	25'-0"	v602(E)	sp602(E)

TOP PLAN

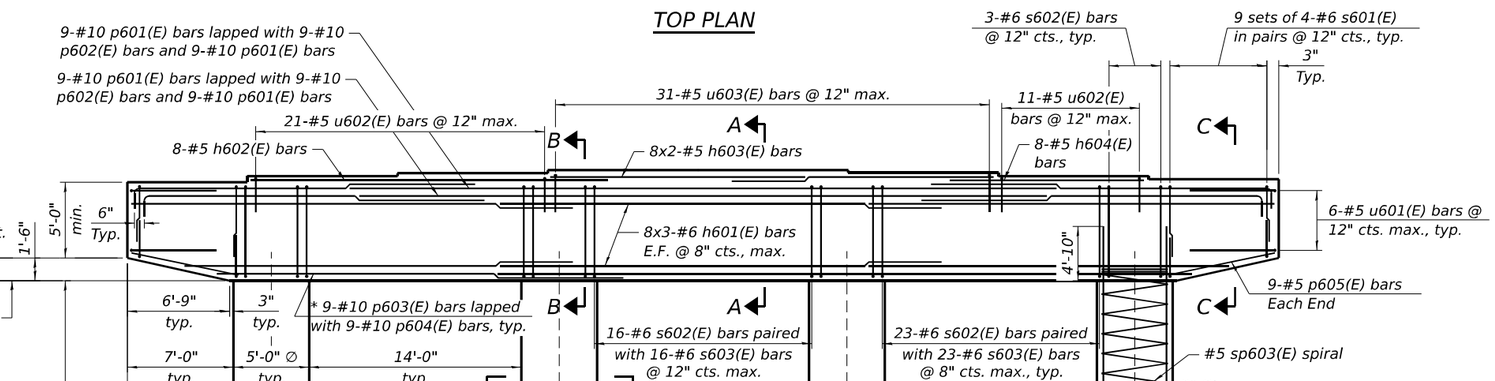

ELEVATION
(Looking East)

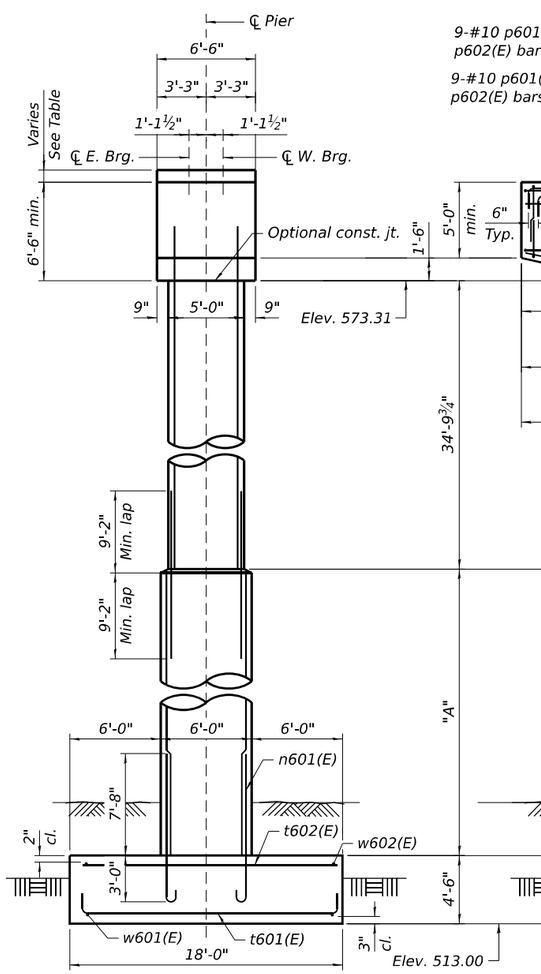

END VIEW
(The maximum applied service bearing pressure, Qmax = 19 ksf)

NOTES:

1. Cast steps monolithically with cap.
2. Space reinforcement in cap to miss anchor bolts.
3. Bars indicated thus 11x3-#5 etc. indicate 11 lines of bars with 3 segments per line.
4. The bottom of footing elevations shall be adjusted to ensure a minimum embedment of 36 inches in non-weathered rock. The rock excavation shall be made with near-vertical sides at the plan dimensions to allow the sides and base of the embedded portion of the footing to be cast against undisturbed rock surfaces.
5. See sheet S-293 for Footing Plan, Sections A-A thru E-E, and Bill of Material.
6. Spiral reinforcement shall be provided with 1½ extra turns at each end, and extend spiral 2" into pier cap. Provide min. 4-#4 spacers or equivalent.

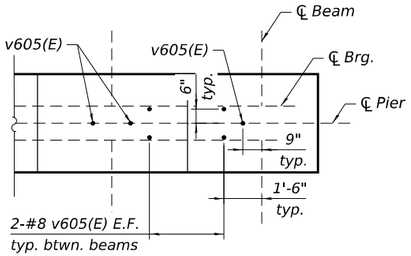

PLAN SHOWING DOWEL LOCATION FOR DIAPHRAGM

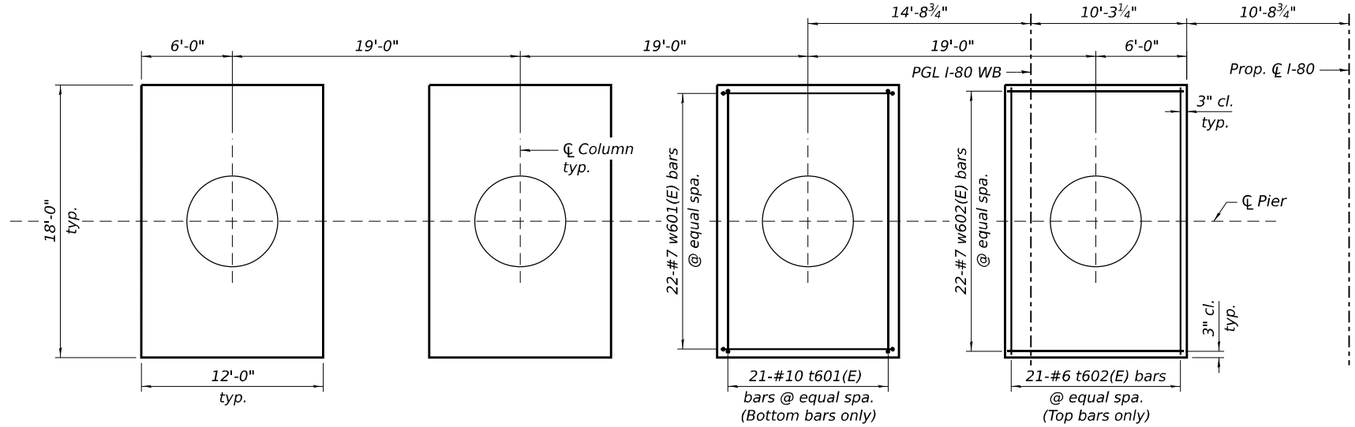

FOOTING PLAN

(Some bars omitted for clarity)

BILL OF MATERIAL - PIER 6 WB

	Bar	No.	Size	Length	Shape
	h601(E)	48	#6	28'-2"	
	h602(E)	8	#5	22'-1"	
	h603(E)	16	#5	16'-6"	
	h604(E)	8	#5	12'-2"	
	n601(E)	104	#10	12'-1"	
	p601(E)	36	#10	25'-1"	
	p602(E)	18	#10	46'-8"	
	p603(E)	9	#10	26'-9"	
	p604(E)	9	#10	45'-8"	
	p605(E)	18	#5	10'-4"	
	s601(E)	72	#6	13'-10"	
	s602(E)	74	#6	26'-0"	
	s603(E)	62	#6	19'-0"	
**	sp601(E)	2	#5	20'-9"	
**	sp602(E)	2	#5	24'-9"	
**	sp603(E)	4	#5	35'-0"	
	t601(E)	84	#10	21'-2"	
	t602(E)	84	#6	17'-6"	
	u601(E)	12	#5	13'-4"	
	u602(E)	32	#5	8'-8"	
	u603(E)	31	#5	9'-2"	
	v601(E)	52	#10	20'-6"	
	v602(E)	52	#9	24'-6"	
	v603(E)	104	#9	18'-10"	
	v604(E)	104	#9	39'-8"	
	v605(E)	42	#8	4'-2"	
	w601(E)	88	#7	13'-10"	
	w602(E)	88	#7	11'-6"	
	Structure Excavation			Cu. Yd.	261
	Concrete Structures			Cu. Yd.	467.2
	Reinforcement Bars, Epoxy Coated			Pound	78,660
	Rock Excavation for Structures			Cu. Yd.	96

** Length is height of spiral.
Maximum lap for spirals = 3'-0"

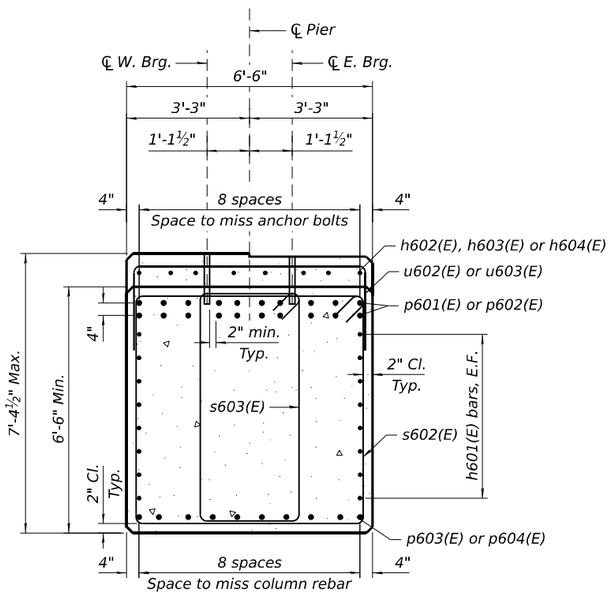

SECTION A-A

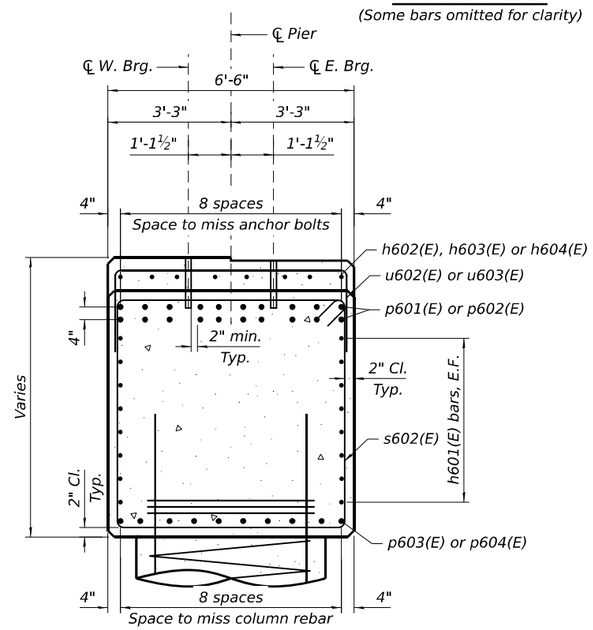

SECTION B-B

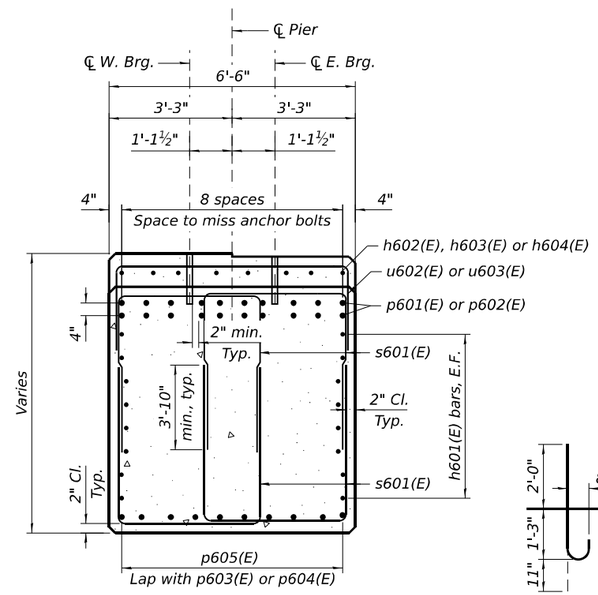

SECTION C-C

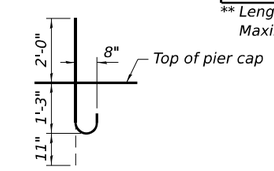

BAR v605(E)

Dowel bar detail

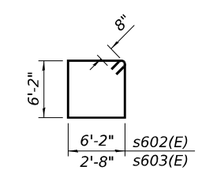

BARS s602(E) & s603(E)

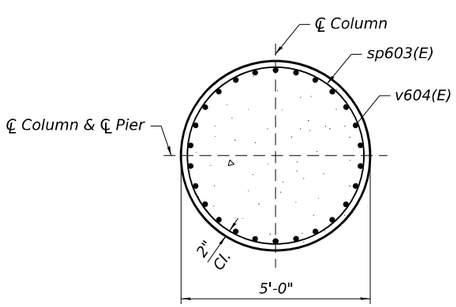

SECTION D-D

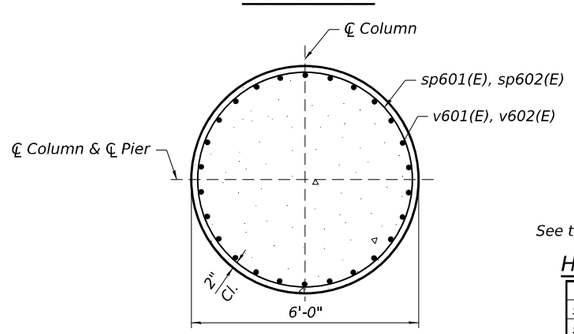

SECTION E-E

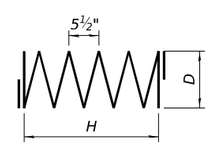

SPIRALS

See table for D and H dimensions

H & D DIMENSIONS

Bar	H	D
sp601(E)	20'-9"	5'-8"
sp602(E)	24'-9"	5'-8"
sp602(E)	35'-0"	4'-8"

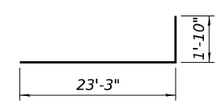

BARS p601(E)

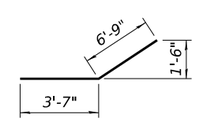

BAR p605(E)

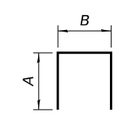

BARS s601(E), t601(E), u601(E), u602(E), u603(E) & w601(E)

See table for A and B dimensions

A & B DIMENSIONS

Bar	A	B
s601(E)	5'-0"	3'-10"
t601(E)	1'-10"	17'-6"
u601(E)	3'-7"	6'-2"
u602(E)	1'-3"	6'-2"
u603(E)	1'-6"	6'-2"
w601(E)	1'-2"	11'-6"

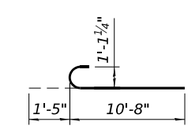

BARS n601(E)

MODEL: Default
FILE NAME: pw://transystems-pw.bentley.com:transyscorp-pw1-hosted/Documents/Projects_2018/CH401/401180022/03-WSP/CAD/62R23-R8-1/Sheets/Structural/0998309-62R23-S828-P6WB02.dgn

WSP USA Inc.
30 N. LASALLE STREET
SUITE 4200
CHICAGO, IL 60602
TEL: (312) 782-8150
FAX: (312) 782-1684

USER NAME = USSJ696614	DESIGNED - FIM	REVISED -	
	CHECKED - PJL	REVISED -	
PLOT SCALE = 0:2 ':' / in.	DRAWN - FIM	REVISED -	
PLOT DATE = 11/5/2025	CHECKED - PP	REVISED -	

STATE OF ILLINOIS
DEPARTMENT OF TRANSPORTATION

PIER 6 WB DETAILS
STRUCTURE NUMBER 099-8309 WB AND 099-8325 EB

SHEET S-293 OF S-333 SHEETS

F.A.I RTE.	SECTION	COUNTY	TOTAL SHEETS	SHEET NO.
I-80	FAI 80 21 STRUCTURE 2	WILL	1230	874
		CONTRACT NO. 62R23		
	ILLINOIS	FED. AID PROJECT		

MINIMUM BAR LAP

#5 bar (Horiz.) = 3'-7"
#6 bar (Horiz.) = 4'-4"
#6 bar (Vert.) = 3'-10"
#9 bar (Vert.) = 9'-2"
#10 bar (Horiz.) = 8'-9"
#10 bar (Vert.) = 7'-8"

* Alternate locations of laps Lt./Rt. within each row so that no two adjacent bars are lapped at the same location.

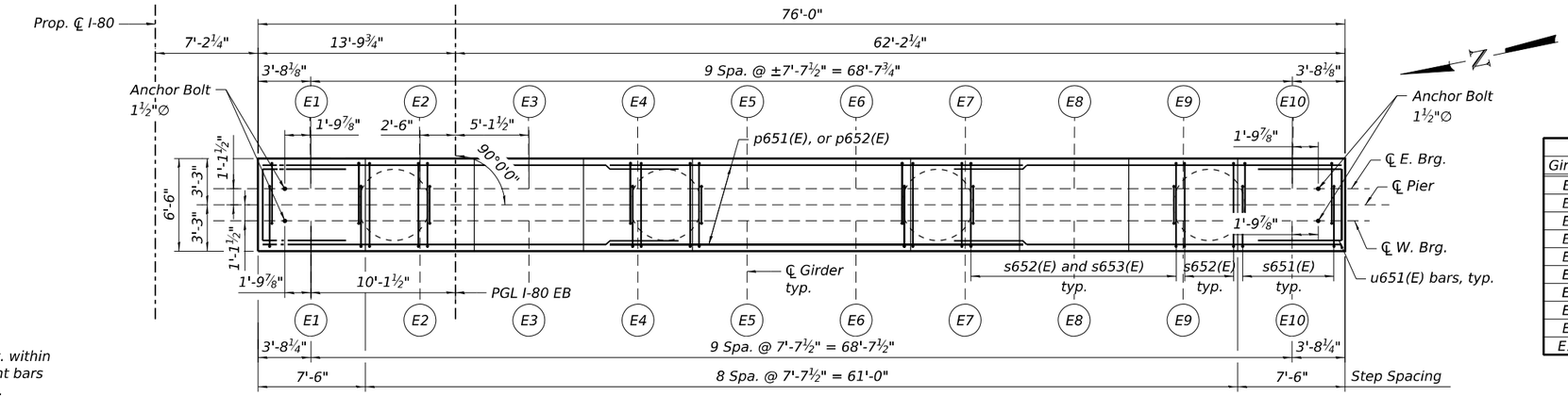

TOP PLAN

BEARING SEAT ELEVATIONS

West Bearings			East Bearings		
Girder	Elevation	Step Ht.	Girder	Elevation	Step Ht.
E1	579.73	1⅞"	E1	579.65	1⅞"
E2	579.89	±1⅝"	E2	579.81	±1⅝"
E3	580.02	1⅞"	E3	579.94	1⅞"
E4	580.18	±1¾"	E4	580.10	±1¾"
E5	580.32	0"	E5	580.24	0"
E6	580.32	±1¾"	E6	580.24	±1¾"
E7	580.18	1⅞"	E7	580.10	1⅞"
E8	580.02	1⅝"	E8	579.94	1⅝"
E9	579.88	4¼"	E9	579.80	4¼"
E10	579.53		E10	579.45	

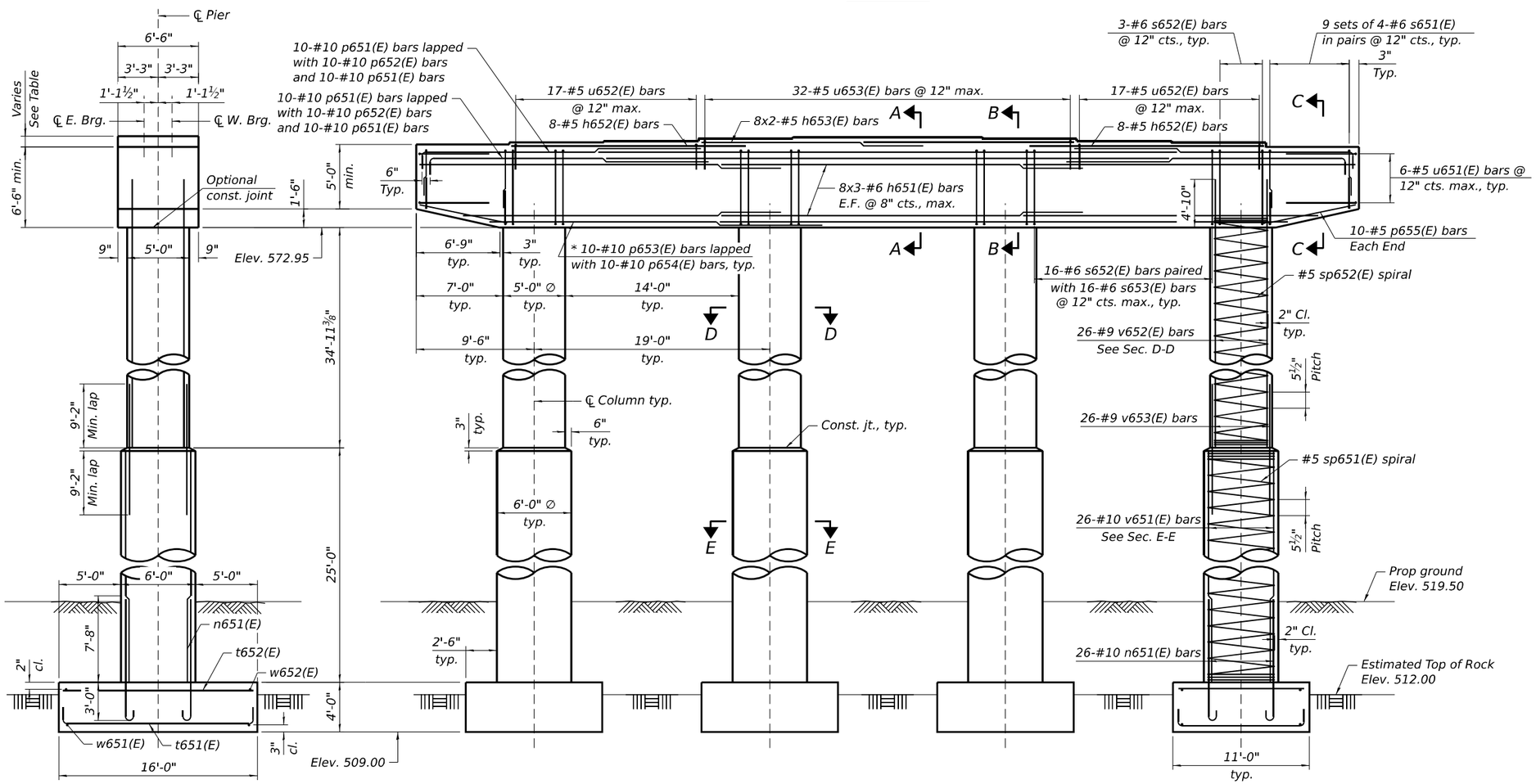

END VIEW

(The maximum applied service bearing pressure, Qmax = 20 ksf)

ELEVATION

(Looking East)

NOTES:

1. Cast steps monolithically with cap.
2. Space reinforcement in cap to miss anchor bolts.
3. Bars indicated thus 11x3-#5 etc. indicate 11 lines of bars with 3 segments per line.
4. The bottom of footing elevations shall be adjusted to ensure a minimum embedment of 36 inches in non-weathered rock. The rock excavation shall be made with near-vertical sides at the plan dimensions to allow the sides and base of the embedded portion of the footing to be cast against undisturbed rock surfaces.
5. See sheet S-295 for Footing Plan, Sections A-A thru E-E, and Bill of Material.
6. Spiral reinforcement shall be provided with 1½ extra turns at each end, and extend spiral 2" into pier cap. Provide min. 4-#4 spacers or equivalent.

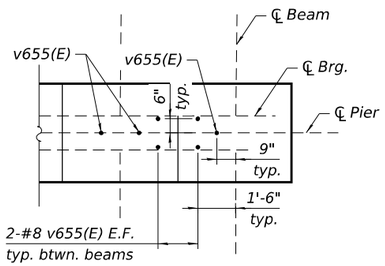

PLAN SHOWING DOWEL LOCATION FOR DIAPHRAGM

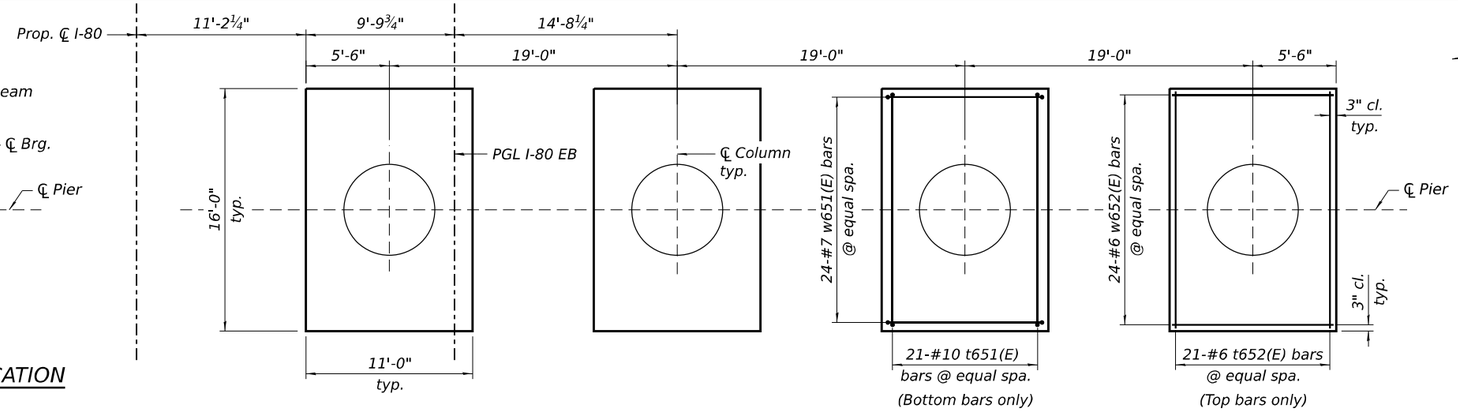

FOOTING PLAN

(Some bars omitted for clarity)

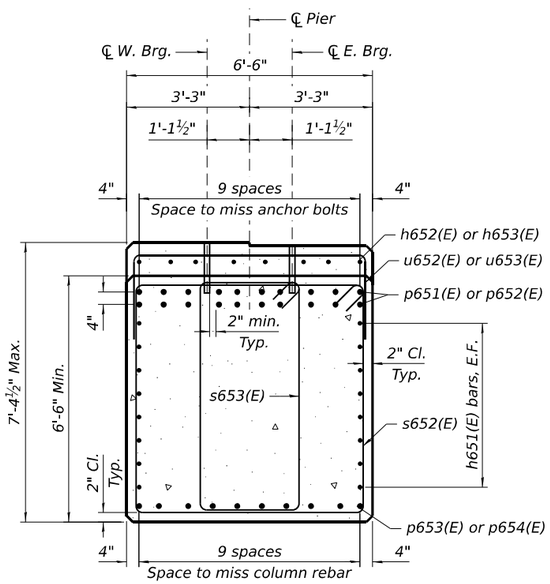

SECTION A-A

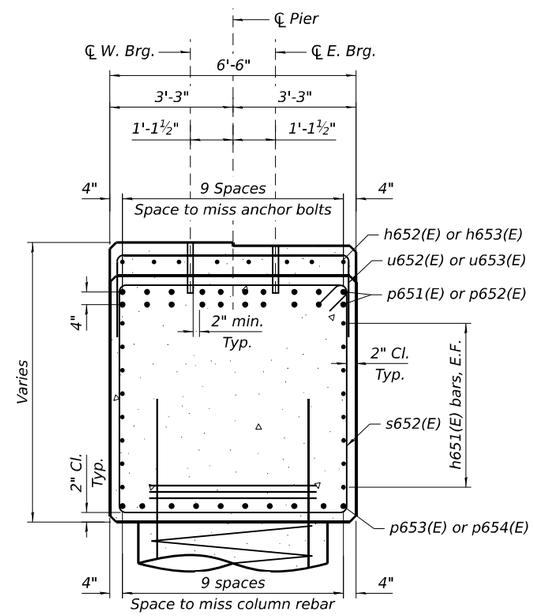

SECTION B-B

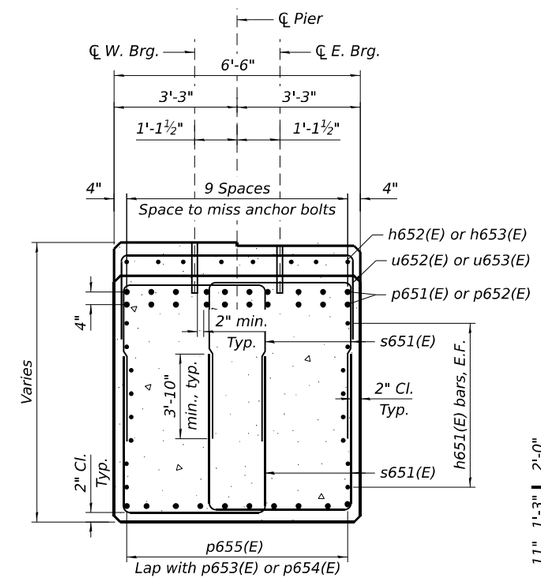

SECTION C-C

BILL OF MATERIAL - PIER 6 EB

	Bar	No.	Size	Length	Shape
	h651(E)	48	#6	28'-2"	
	h652(E)	16	#5	17'-6"	
	h653(E)	16	#5	16'-9"	
	n651(E)	104	#10	12'-1"	
	p651(E)	40	#10	25'-1"	
	p652(E)	20	#10	46'-8"	
	p653(E)	10	#10	26'-9"	
	p654(E)	10	#10	45'-8"	
	p655(E)	20	#5	10'-4"	
	s651(E)	72	#6	13'-10"	
	s652(E)	60	#6	26'-0"	
	s653(E)	48	#6	19'-0"	
**	sp651(E)	4	#5	24'-9"	
**	sp652(E)	4	#5	35'-2"	
	t651(E)	84	#10	19'-2"	
	t652(E)	84	#6	15'-6"	
	u651(E)	12	#5	13'-4"	
	u652(E)	34	#5	8'-6"	
	u653(E)	32	#5	9'-6"	
	v651(E)	104	#10	24'-6"	
	v652(E)	104	#9	39'-10"	
	v653(E)	104	#9	18'-10"	
	v655(E)	54	#8	4'-2"	
	w651(E)	96	#7	12'-10"	
	w652(E)	96	#6	10'-6"	
	Structure Excavation			Cu. Yd.	334
	Concrete Structures			Cu. Yd.	435.8
	Reinforcement Bars, Epoxy Coated			Pound	79,340
	Rock Excavation for Structures			Cu. Yd.	79

** Length is height of spiral.
Maximum lap for spirals = 3'-0"

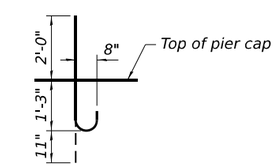

BAR v655(E)

Dowel bar detail

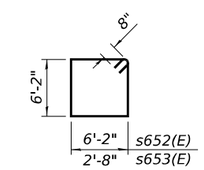

BARS s652(E) & s653(E)

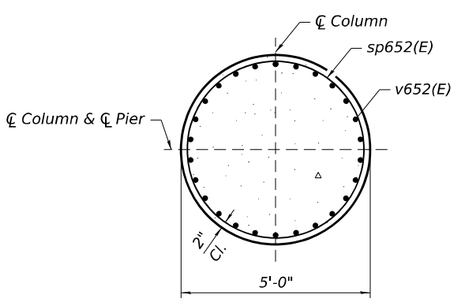

SECTION D-D

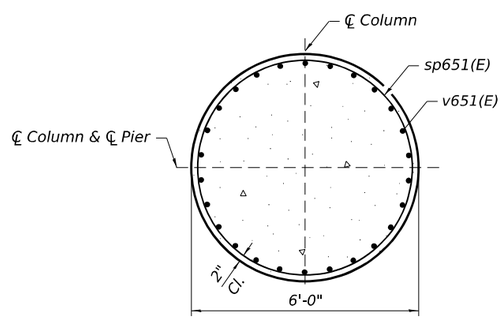

SECTION E-E

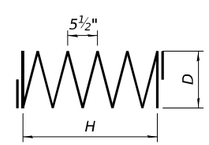

SPIRALS

See table for D and H dimensions

H & D DIMENSIONS

Bar	H	D
sp651(E)	24'-9"	5'-8"
sp652(E)	35'-2"	4'-8"

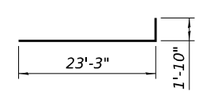

BARS p651(E)

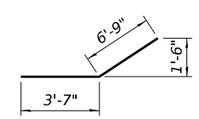

BAR p655(E)

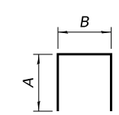

BARS s651(E), t651(E), u651(E), u652(E), u653(E) & w651(E)

See table for A and B dimensions

A & B DIMENSIONS

Bar	A	B
s651(E)	5'-0"	3'-10"
t651(E)	1'-10"	15'-6"
u651(E)	3'-7"	6'-2"
u652(E)	1'-2"	6'-2"
u653(E)	1'-8"	6'-2"
w651(E)	1'-2"	10'-6"

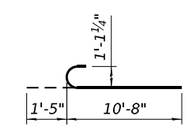

BARS n651(E)

WSP USA Inc.
30 N. LASALLE STREET
SUITE 4200
CHICAGO, IL 60602
TEL: (312) 782-8150
FAX: (312) 782-1684

USER NAME = USSJ696614	DESIGNED - FIM	REVISED -	
	CHECKED - PJL	REVISED -	
PLOT SCALE = 0:2 ':" / in.	DRAWN - FIM	REVISED -	
PLOT DATE = 11/5/2025	CHECKED - PJL	REVISED -	

STATE OF ILLINOIS
DEPARTMENT OF TRANSPORTATION

PIER 6 EB DETAILS
STRUCTURE NUMBER 099-8309 WB AND 099-8325 EB

SHEET S-295 OF S-333 SHEETS

F.A.I RTE.	SECTION	COUNTY	TOTAL SHEETS	SHEET NO.
I-80	FAI 80 21 STRUCTURE 2	WILL	1230	876
		CONTRACT NO. 62R23		
	ILLINOIS	FED. AID PROJECT		

MINIMUM BAR LAP

#5 bar (Horiz.) = 3'-7"
#6 bar (Horiz.) = 4'-4"
#6 bar (Vert.) = 3'-10"
#9 bar (Vert.) = 9'-2"
#10 bar (Horiz.) = 8'-9"
#10 bar (Vert.) = 10'-2"

(1) West Bearing

(2) East Bearing

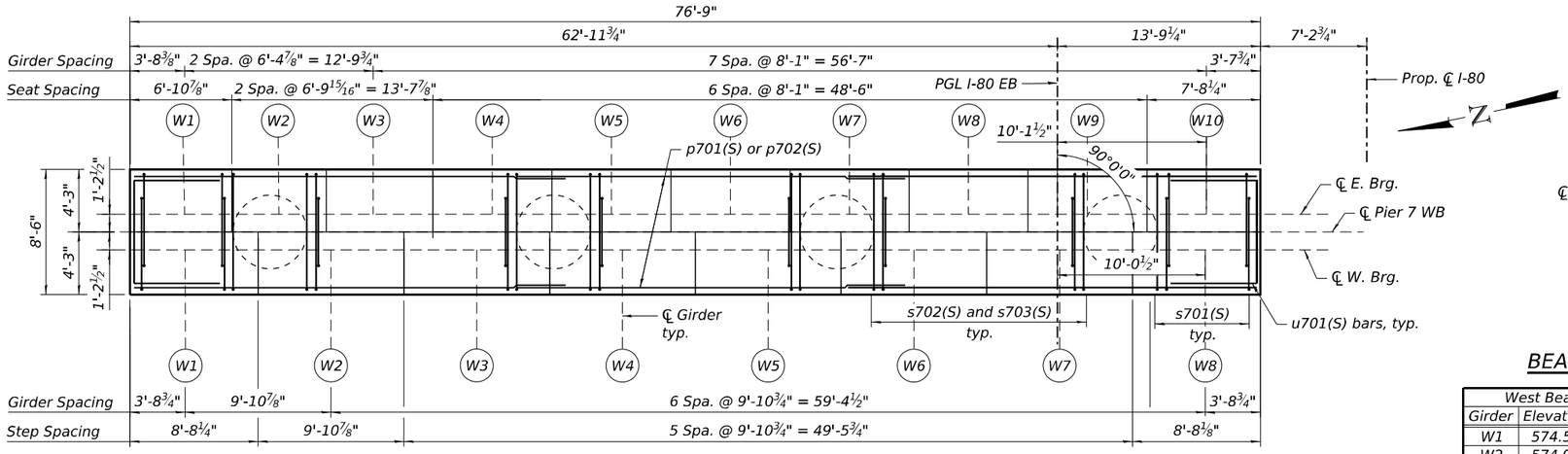

TOP PLAN

(Some bars omitted for clarity)

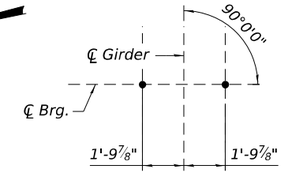

ANCHOR BOLT LAYOUT

(W. Brg. & E. Brg.)

BEARING SEAT ELEVATIONS

West Bearings			East Bearings		
Girder	Elevation	Step Ht.	Girder	Elevation	Step Ht.
W1	574.50		W1	574.41	
		5½"			4⅛"
W2	574.96		W2	574.75	
		2⅝"			1⅞"
W3	575.18		W3	574.91	
		2⅛"			2"
W4	575.36		W4	575.08	
		0"			1½"
W5	575.36		W5	575.20	
		2⅛"			⅞"
W6	575.18		W6	575.27	
		1⅞"			⅝"
W7	575.02		W7	575.22	
		2½"			⅞"
W8	574.81		W8	575.15	
					1⅜"
			W9	575.04	
					1⅞"
			W10	574.88	

COLUMN TABLE

Column	"A"	"X"	"Y"
1-2	25'-0"	v701(E)	sp701(E)
3-4	21'-0"	v702(E)	sp702(E)

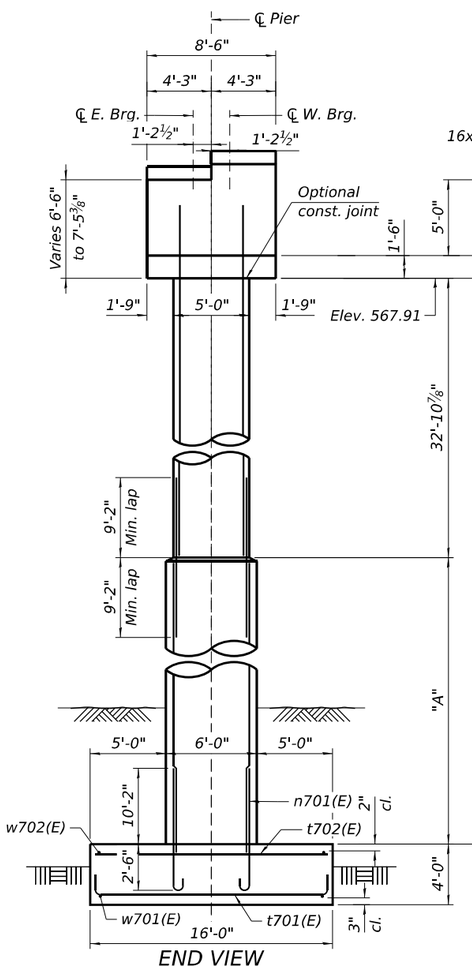

END VIEW

(The maximum applied service bearing pressure, Qmax = 18 ksf)

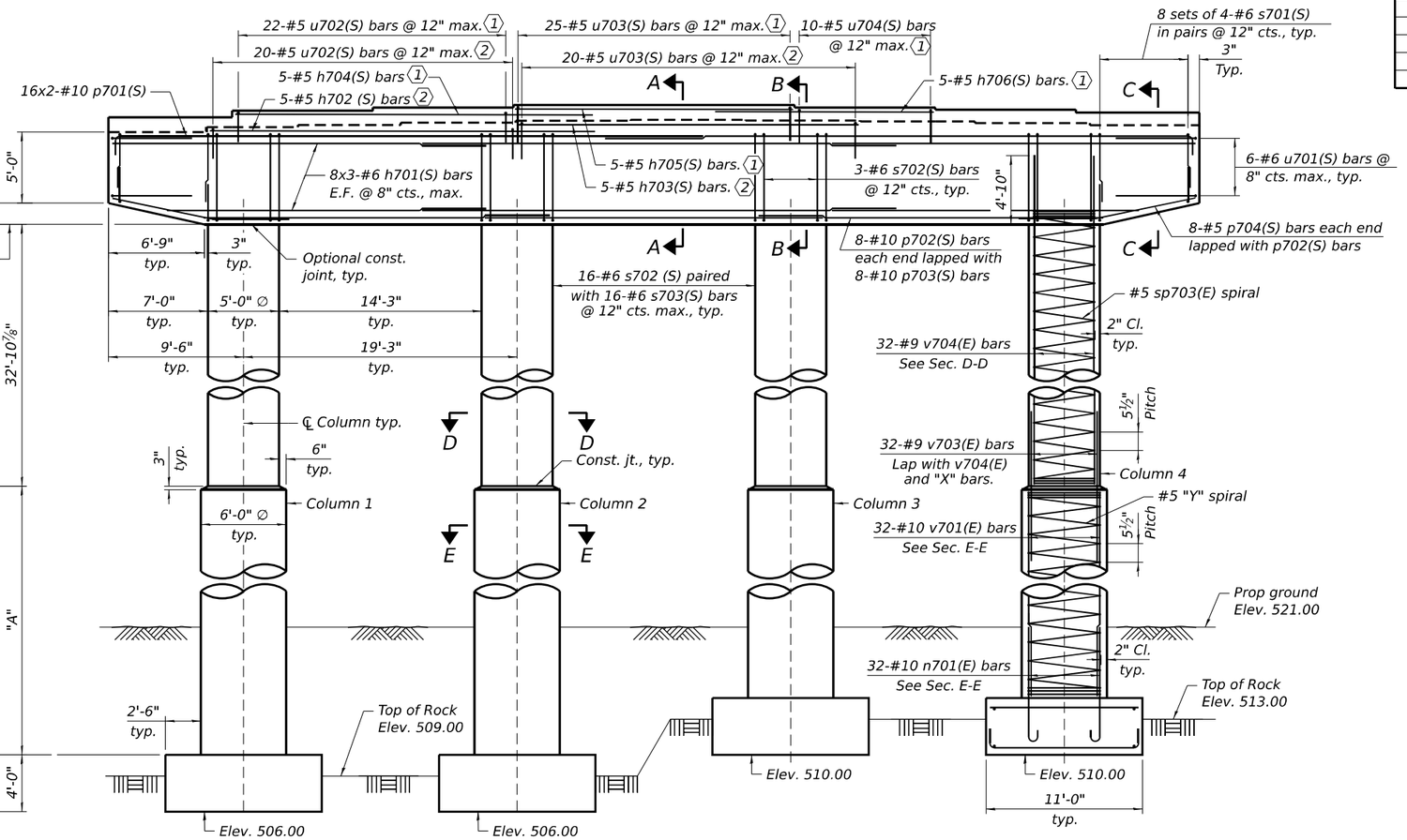

ELEVATION

(Looking East)

NOTES:

1. Space reinforcement in cap to miss anchor bolts.
2. Pour steps monolithically with cap.
3. Concrete Sealer shall be applied to exposed surfaces of Pier cap, seats, and columns above grade.
4. Bars indicated thus 10x2-#10 etc. indicate 10 lines of bars with 2 segments per line.
5. The bottom of footing elevations shall be adjusted to ensure a minimum embedment of 36 inches in non-weathered rock. The rock excavation shall be made with near-vertical sides at the plan dimensions to allow the sides and base of the embedded portion of the footing to be cast against undisturbed rock surfaces.
6. See sheet S-297 for Footing Plan, Sections A-A thru E-E, and Bill of Material.
7. Spiral reinforcement shall be provided with 1½" extra turns at each end, and extend spiral 2" into pier cap. Provide min. 4-#4 spacers or equivalent.

WSP USA Inc.
30 N. LASALLE STREET
SUITE 4200
CHICAGO, IL 60602
TEL: (312) 782-8150
FAX: (312) 782-1684

USER NAME = USSJ696614	DESIGNED - KB	REVISED -	
	CHECKED - PJL	REVISED -	
PLOT SCALE = 0:2 ':' / in.	DRAWN - GM	REVISED -	
PLOT DATE = 11/5/2025	CHECKED - KB	REVISED -	

STATE OF ILLINOIS
DEPARTMENT OF TRANSPORTATION

PIER 7 WB
STRUCTURE NUMBER 099-8309 WB AND 099-8325 EB

SHEET S-296 OF S-333 SHEETS

F.A.I RTE.	SECTION	COUNTY	TOTAL SHEETS	SHEET NO.
I-80	FAI 80 21 STRUCTURE 2	WILL	1230	877
		CONTRACT NO. 62R23		
		ILLINOIS	FED. AID PROJECT	

MODEL: Default
FILE NAME: pw://transystems-pw.bentley.com:transyscorp-pw1-hosted/Documents/Projects_2018/CH401/401180022/03-WSP/CAD/62R23-RB-1/Sheets/Structural/0998309-62R23-S831-P7WB01.dgn

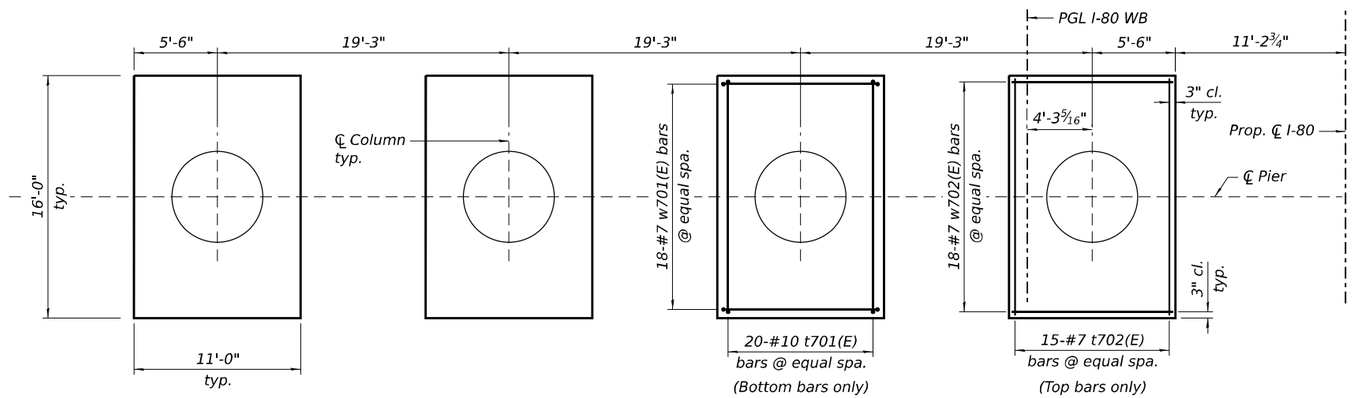

FOOTING PLAN

(Some bars omitted for clarity)

BILL OF MATERIAL - PIER 7 WB

	Bar	No.	Size	Length	Shape
	h701(S)	48	#6	27'-8"	
	h702(S)	5	#5	25'-6"	
	h703(S)	5	#5	23'-11"	
	h704(S)	5	#5	23'-3"	
	h705(S)	5	#5	19'-8"	
	h706(S)	5	#5	13'-4"	
	n701(E)	128	#10	14'-1"	
	p701(S)	16	#10	44'-5"	
	p702(S)	16	#10	26'-2"	
	p703(S)	8	#10	28'-0"	
	p704(S)	16	#5	10'-6"	
	s701(S)	64	#6	15'-2"	
	s702(S)	60	#6	30'-0"	
	s703(S)	48	#6	18'-2"	
**	sp701(E)	2	#5	24'-9"	
**	sp702(E)	2	#5	20'-9"	
**	sp703(E)	4	#5	33'-1"	
	t701(E)	80	#10	19'-4"	
	t702(E)	60	#7	15'-8"	
	u701(S)	12	#6	16'-10"	
	u702(S)	42	#5	7'-1"	
	u703(S)	45	#5	8'-5"	
	u704(S)	10	#5	8'-1"	
	v701(E)	64	#10	24'-8"	
	v702(E)	64	#10	20'-8"	
	v703(E)	128	#9	18'-4"	
	v704(E)	128	#9	37'-7"	
	w701(E)	72	#7	13'-10"	
	w702(E)	72	#7	10'-8"	
	Structure Excavation			Cu. Yd.	445
	Rock Excavation for Structures			Cu. Yd.	79
	Concrete Structures			Cu. Yd.	465.1
	Reinforcement Bars, Epoxy Coated			Pound	65,260
	Reinforcement Bars, Stainless Steel			Pound	15,120
	Concrete Sealer			Sq. Ft.	5,429

** Length is height of spiral.
Maximum lap for spirals = 3'-0"

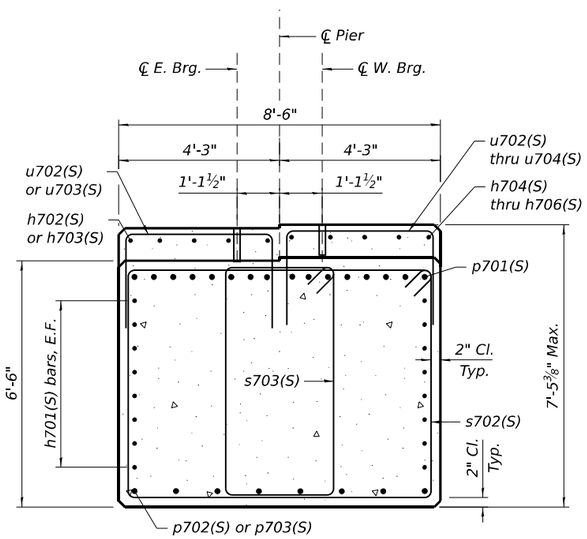

SECTION A-A

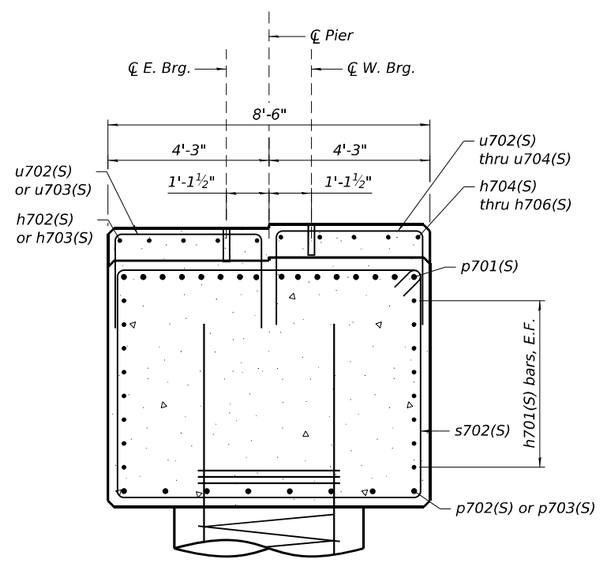

SECTION B-B

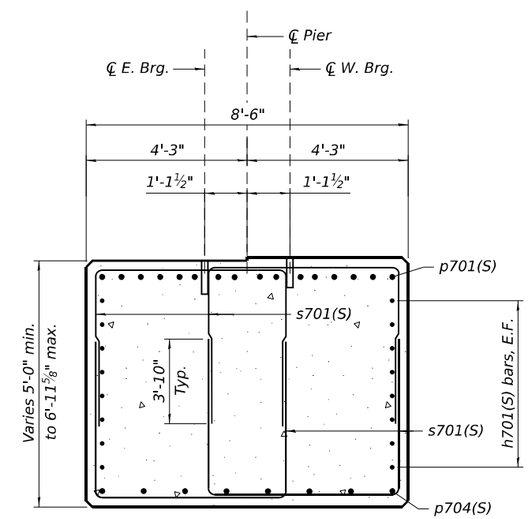

SECTION C-C

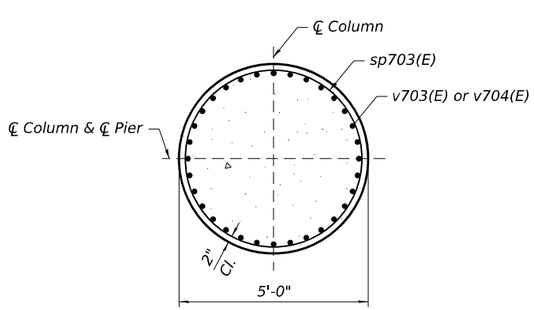

SECTION D-D

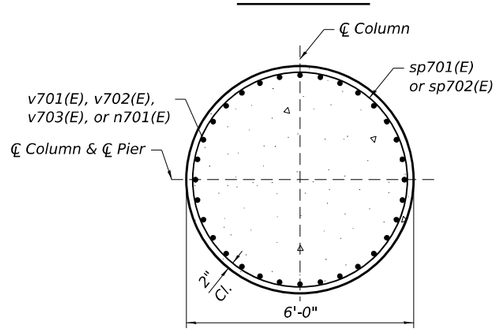

SECTION E-E

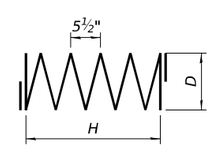

SPIRALS

See table for D and H dimensions

H & D DIMENSIONS

Bar	H	D
sp701(E)	24'-10"	5'-8"
sp702(E)	20'-9"	5'-8"
sp703(E)	33'-1"	4'-8"

A & B DIMENSIONS

Bar	A	B
s701(S)	5'-2"	5'-0"
t701(E)	15'-8"	1'-10"
u701(S)	8'-2"	4'-4"
u702(S)	3'-11"	1'-7"
u703(S)	3'-11"	2'-3"
u704(S)	3'-11"	2'-1"
w701(E)	10'-2"	15'-6"

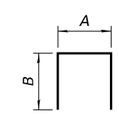

BARS s701(S), t701(E), u701(S), u702(S), u703(S), u704(S), & w701(E)

See table for A and B dimensions

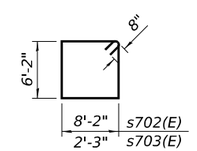

BARS s702(E) & s703(E)

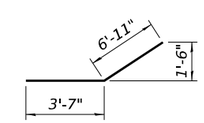

BAR p704(E)

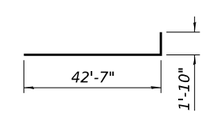

BARS p701(S)

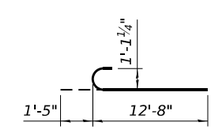

BARS n701(E)

MODEL: Default
FILE NAME: pw://transystems-pw.bentley.com:transyscorp-pw1-hosted/Documents/Projects_2018/CH401/401180022/03-WSP/CAD/62R23-RB-1/Sheets/Structural/0998309-62R23-S832-PYWB02.dgn

WSP USA Inc.
30 N. LASALLE STREET
SUITE 4200
CHICAGO, IL 60602
TEL: (312) 782-8150
FAX: (312) 782-1684

USER NAME = USSJ696614	DESIGNED - KB	REVISED -	
	CHECKED - PJL	REVISED -	
PLOT SCALE = 0:2 ':' / in.	DRAWN - GM	REVISED -	
PLOT DATE = 11/5/2025	CHECKED - KB	REVISED -	

STATE OF ILLINOIS
DEPARTMENT OF TRANSPORTATION

PIER 7 WB DETAILS
STRUCTURE NUMBER 099-8309 WB AND 099-8325 EB

SHEET S-297 OF S-333 SHEETS

F.A.I RTE.	SECTION	COUNTY	TOTAL SHEETS	SHEET NO.
I-80	FAI 80 21 STRUCTURE 2	WILL	1230	878
		CONTRACT NO. 62R23		
		ILLINOIS	FED. AID PROJECT	

MINIMUM BAR LAP

#5 bar (Horiz.) = 3'-7"
#6 bar (Horiz.) = 4'-4"
#6 bar (Vert.) = 3'-10"
#9 bar (Vert.) = 9'-2"
#10 bar (Horiz.) = 8'-9"
#10 bar (Vert.) = 7'-8"

* Alternate locations of laps Lt./Rt. within each row so that no two adjacent bars are lapped at the same location.

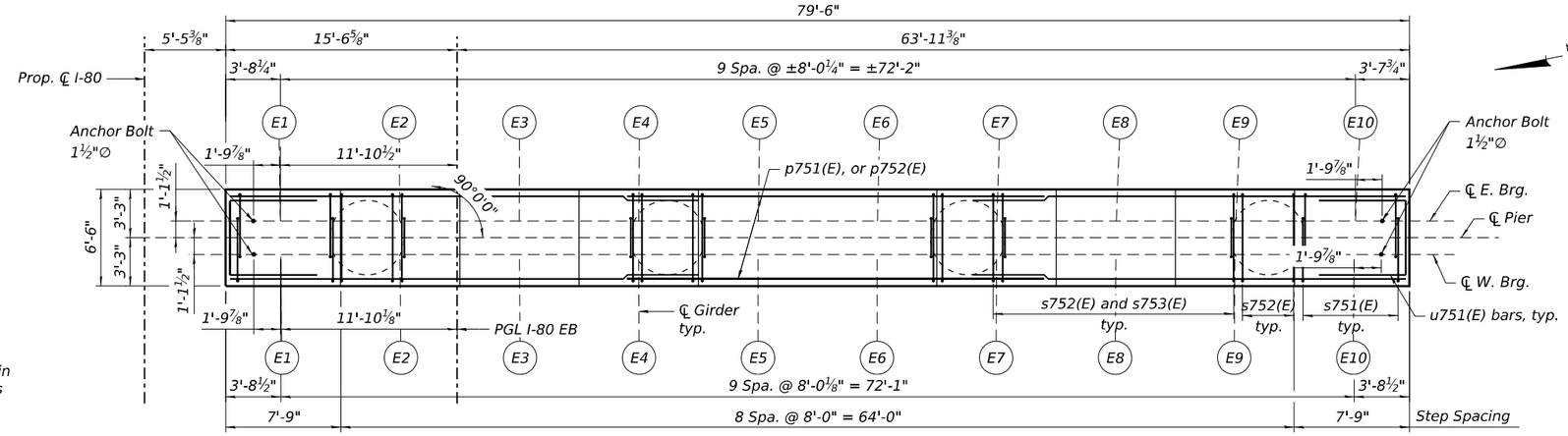

TOP PLAN

BEARING SEAT ELEVATIONS

West Bearings			East Bearings		
Girder	Elevation	Step Ht.	Girder	Elevation	Step Ht.
E1	574.45		E1	574.38	
		1⅞"			1⅞"
E2	574.61		E2	574.54	
		1¾"			1¾"
E3	574.76		E3	574.69	
		±1¾"			±1¾"
E4	574.90		E4	574.83	
		1"			1"
E5	574.98		E5	574.91	
		0"			0"
E6	574.98		E6	574.91	
		±1¾"			±1¾"
E7	574.84		E7	574.77	
		2"			2"
E8	574.67		E8	574.60	
		2⅛"			2⅛"
E9	574.49		E9	574.42	
		±4⅝"			±4⅝"
E10	574.11		E10	574.04	

COLUMN TABLE

Column	"A"	"X"	"Y"
1-2	19'-0"	v751(E)	sp751(E)
3-4	28'-0"	v752(E)	sp752(E)

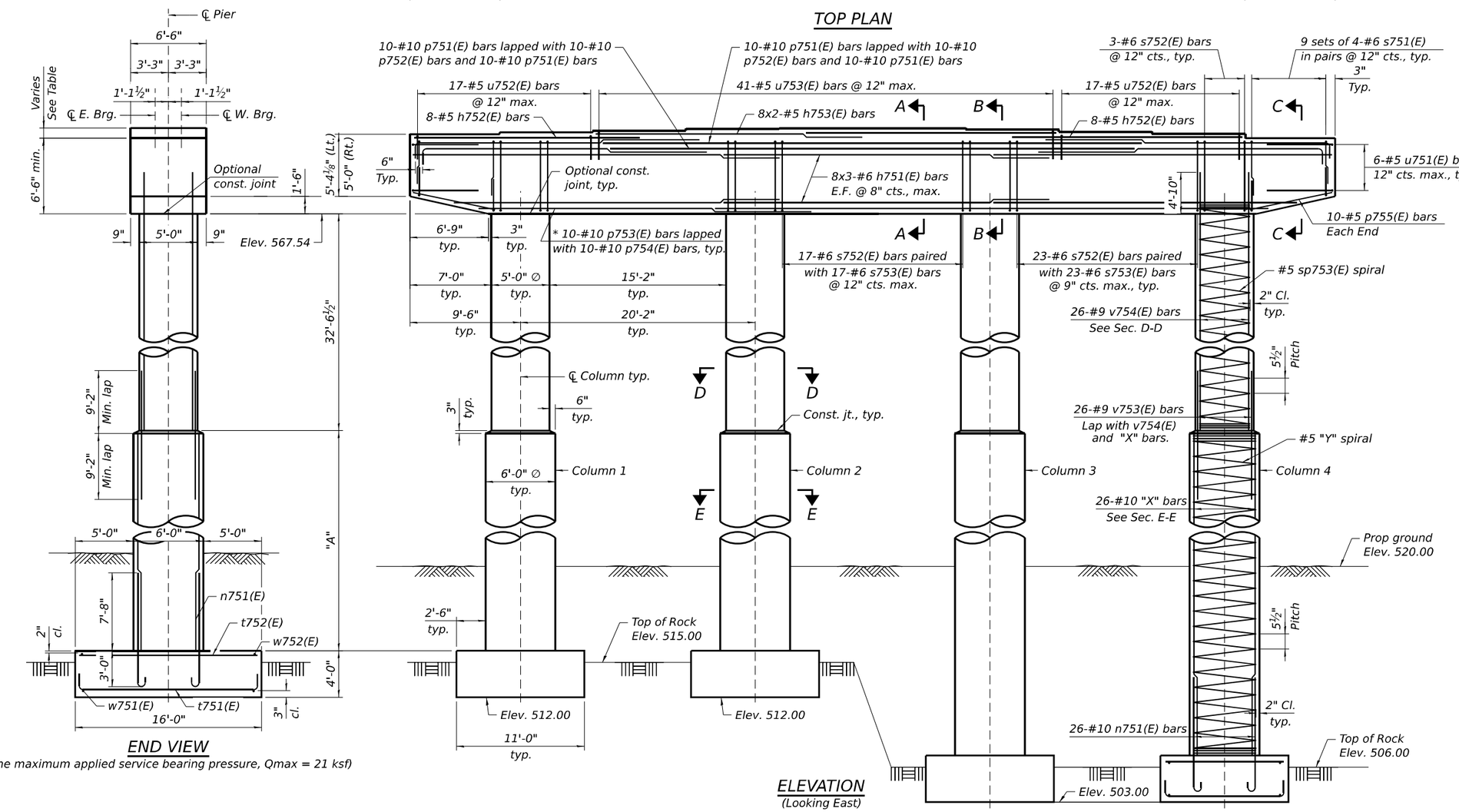

NOTES:

1. Cast steps monolithically with cap.
2. Space reinforcement in cap to miss anchor bolts.
3. Bars indicated thus 11x3-#5 etc. indicate 11 lines of bars with 3 segments per line.
4. The bottom of footing elevations shall be adjusted to ensure a minimum embedment of 36 inches in non-weathered rock. The rock excavation shall be made with near-vertical sides at the plan dimensions to allow the sides and base of the embedded portion of the footing to be cast against undisturbed rock surfaces.
5. See sheet S-299 for Footing Plan, Sections A-A thru E-E, and Bill of Material.
6. Spiral reinforcement shall be provided with 1½ extra turns at each end, and extend spiral 2" into pier cap. Provide min. 4-#4 spacers or equivalent.
7. Rock Elevation shall be field verified due to potential previous utility excavation along this alignment.

WSP USA Inc.
30 N. LASALLE STREET
SUITE 4200
CHICAGO, IL 60602
TEL: (312) 782-8150
FAX: (312) 782-1684

USER NAME = USSJ696614	DESIGNED - FIM	REVISED -	
	CHECKED - PJL	REVISED -	
PLOT SCALE = 0:2 ':' / in.	DRAWN - FIM	REVISED -	
PLOT DATE = 11/5/2025	CHECKED - PJL	REVISED -	

STATE OF ILLINOIS
DEPARTMENT OF TRANSPORTATION

PIER 7 EB
STRUCTURE NUMBER 099-8309 WB AND 099-8325 EB

SHEET S-298 OF S-333 SHEETS

F.A.I RTE.	SECTION	COUNTY	TOTAL SHEETS	SHEET NO.
I-80	FAI 80 21 STRUCTURE 2	WILL	1230	879
		CONTRACT NO. 62R23		
		ILLINOIS	FED. AID PROJECT	

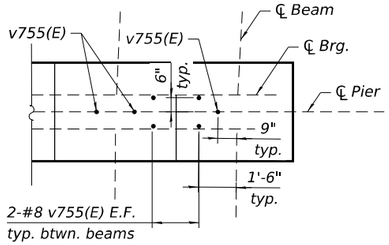

PLAN SHOWING DOWEL LOCATION FOR DIAPHRAGM

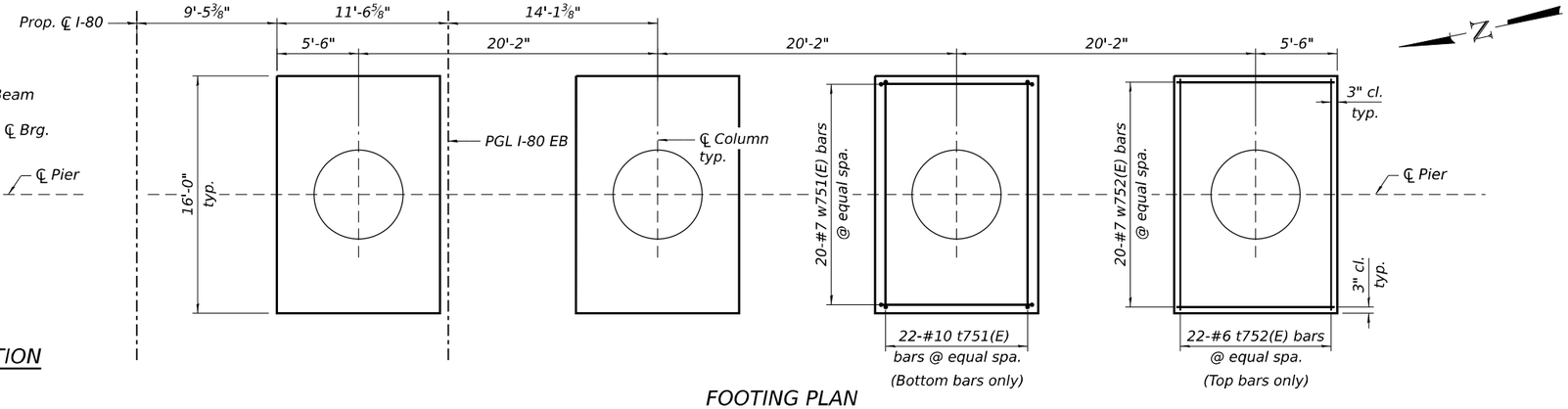

FOOTING PLAN

(Some bars omitted for clarity)

BILL OF MATERIAL - PIER 7 EB

	Bar	No.	Size	Length	Shape
	h751(E)	48	#6	29'-4"	
	h752(E)	16	#5	18'-3"	
	h753(E)	16	#5	21'-8"	
	n751(E)	104	#10	12'-1"	
	p751(E)	40	#10	25'-8"	
	p752(E)	20	#10	49'-0"	
	p753(E)	10	#10	27'-11"	
	p754(E)	10	#10	48'-0"	
	p755(E)	20	#5	10'-4"	
	s751(E)	72	#6	13'-10"	
	s752(E)	77	#6	26'-0"	
	s753(E)	57	#6	19'-0"	
**	sp751(E)	2	#5	18'-9"	
**	sp752(E)	2	#5	27'-9"	
**	sp753(E)	4	#5	32'-9"	
	t751(E)	88	#10	19'-2"	
	t752(E)	88	#6	15'-6"	
	u751(E)	12	#5	13'-4"	
	u752(E)	34	#5	8'-8"	
	u753(E)	41	#5	9'-4"	
	v751(E)	52	#10	18'-6"	
	v752(E)	52	#10	27'-6"	
	v753(E)	104	#9	18'-10"	
	v754(E)	104	#9	37'-5"	
	v755(E)	54	#8	4'-2"	
	w751(E)	80	#7	12'-10"	
	w752(E)	80	#7	10'-6"	
	Structure Excavation			Cu. Yd.	423
	Concrete Structures			Cu. Yd.	439.5
	Reinforcement Bars, Epoxy Coated			Pound	79,760
	Rock Excavation for Structures			Cu. Yd.	79

** Length is height of spiral.
Maximum lap for spirals = 3'-0"

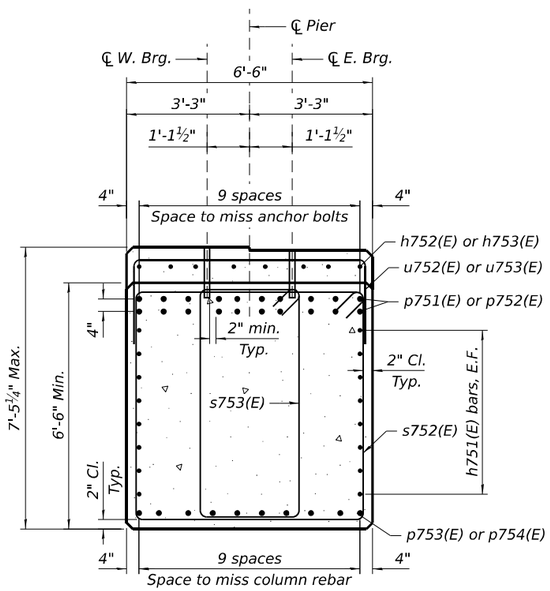

SECTION A-A

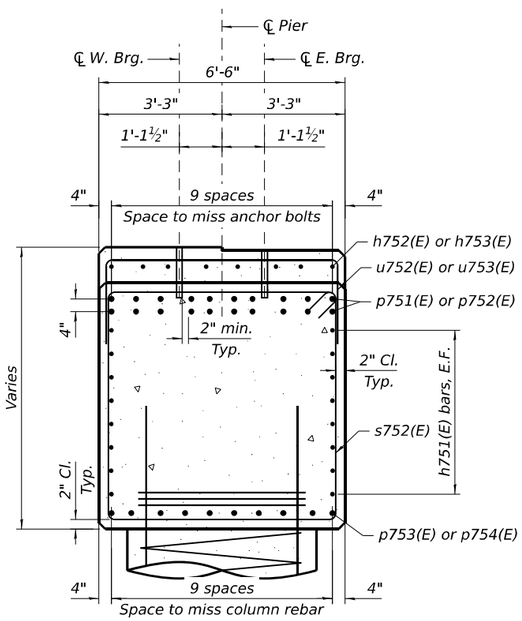

SECTION B-B

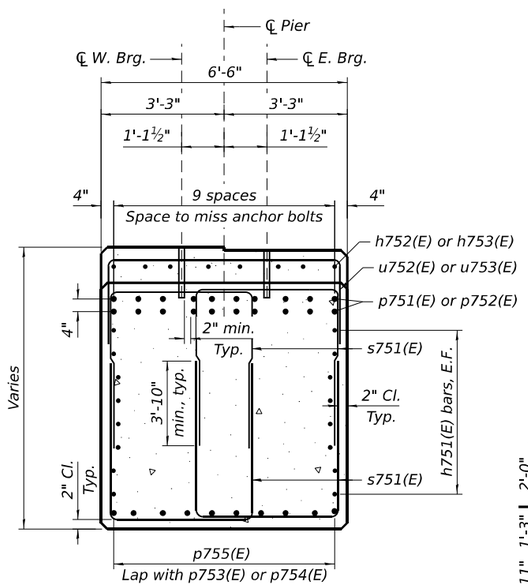

SECTION C-C

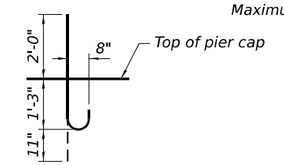

BAR v755(E)

Dowel bar detail

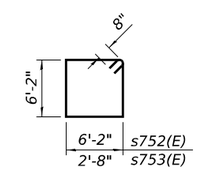

BARS s752(E) & s753(E)

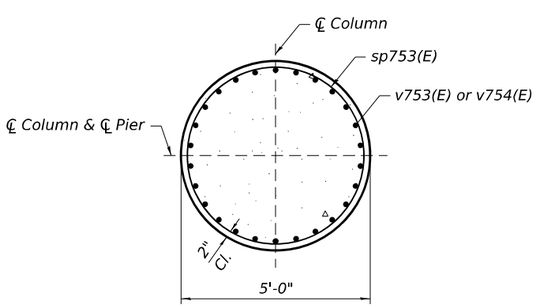

SECTION D-D

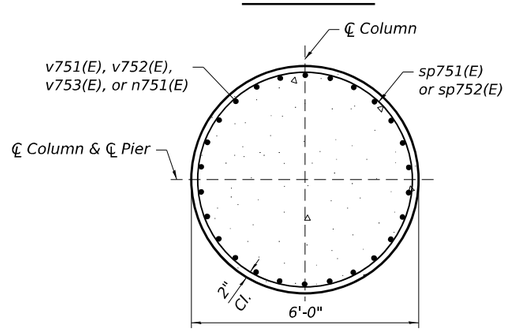

SECTION E-E

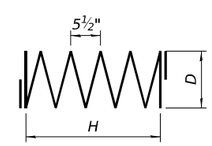

SPIRALS

See table for D and H dimensions

H & D DIMENSIONS

Bar	H	D
sp751(E)	18'-9"	5'-8"
sp752(E)	27'-9"	5'-8"
sp753(E)	32'-9"	4'-8"

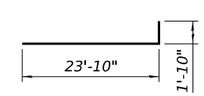

BARS p751(E)

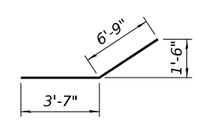

BAR p755(E)

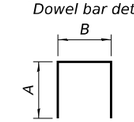

BARS s751(E), t751(E), u751(E), u752(E), u753(E) & w751(E)

See table for A and B dimensions

A & B DIMENSIONS

Bar	A	B
s751(E)	5'-0"	3'-10"
t751(E)	1'-10"	15'-6"
u751(E)	3'-7"	6'-2"
u752(E)	1'-3"	6'-2"
u753(E)	1'-7"	6'-2"
w751(E)	1'-2"	10'-6"

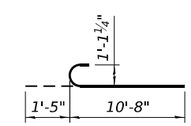

BARS n751(E)

MODEL: Default
FILE NAME: pw://transystems-pw.bentley.com:transyscorp-pw1-hosted/Documents/Projects_2018/CH401/401180022/03-WSP/CAD/62R23-RB-1/Sheets/Structural/0998309-62R23-S834-PTEB02.dgn

WSP USA Inc.
30 N. LASALLE STREET
SUITE 4200
CHICAGO, IL 60602
TEL: (312) 782-8150
FAX: (312) 782-1684

USER NAME = USSJ696614	DESIGNED - FIM	REVISED -	
	CHECKED - PJL	REVISED -	
PLOT SCALE = 0:2 ':" / in.	DRAWN - FIM	REVISED -	
PLOT DATE = 11/5/2025	CHECKED - PJL	REVISED -	

STATE OF ILLINOIS
DEPARTMENT OF TRANSPORTATION

PIER 7 EB DETAILS
STRUCTURE NUMBER 099-8309 WB AND 099-8325 EB

SHEET S-299 OF S-333 SHEETS

F.A.I RTE.	SECTION	COUNTY	TOTAL SHEETS	SHEET NO.
I-80	FAI 80 21 STRUCTURE 2	WILL	1230	880

CONTRACT NO. 62R23

ILLINOIS | FED. AID PROJECT

MINIMUM BAR LAP

#5 bar (Horiz.) = 3'-7"
#6 bar (Horiz.) = 4'-4"
#6 bar (Vert.) = 3'-10"
#9 bar (Vert.) = 6'-3"
#10 bar (Horiz.) = 8'-9"

* Alternate locations of laps Lt./Rt. within each row so that no two adjacent bars are lapped at the same location.

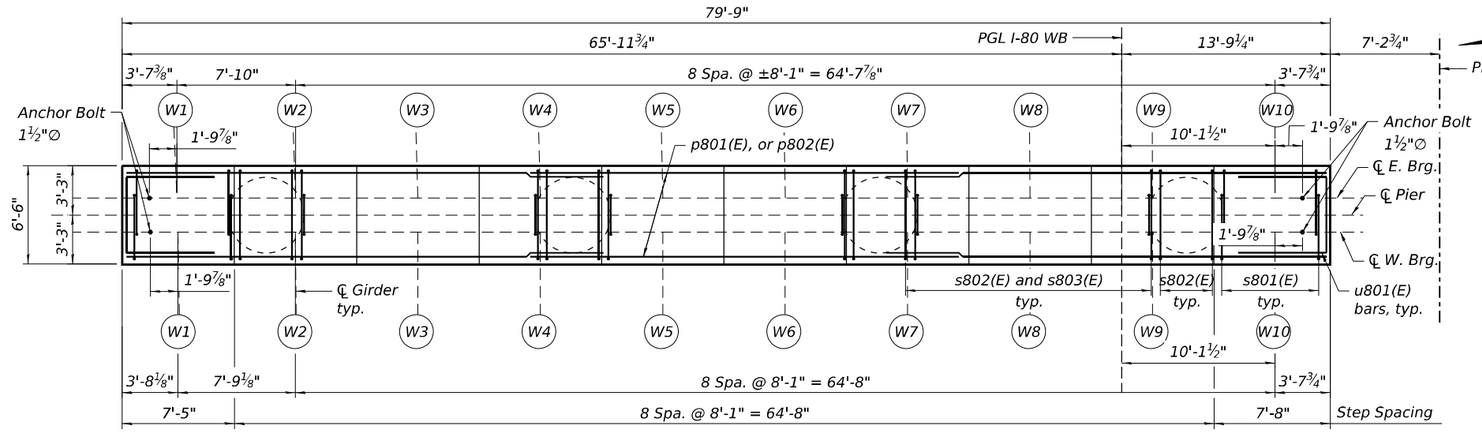

TOP PLAN

BEARING SEAT ELEVATIONS

West Bearings			East Bearings		
Girder	Elevation	Step Ht.	Girder	Elevation	Step Ht.
W1	569.43	4½"	W1	569.35	4½"
W2	569.80	±1⅝"	W2	569.72	±1⅝"
W3	569.93	2"	W3	569.85	2"
W4	570.10	2"	W4	570.02	2"
W5	570.27	2"	W5	570.19	2"
W6	570.44	2½"	W6	570.36	2½"
W7	570.65	2⅞"	W7	570.57	2⅞"
W8	570.89	1⅜"	W8	570.81	1⅜"
W9	571.00	2"	W9	570.92	2"
W10	570.83		W10	570.75	

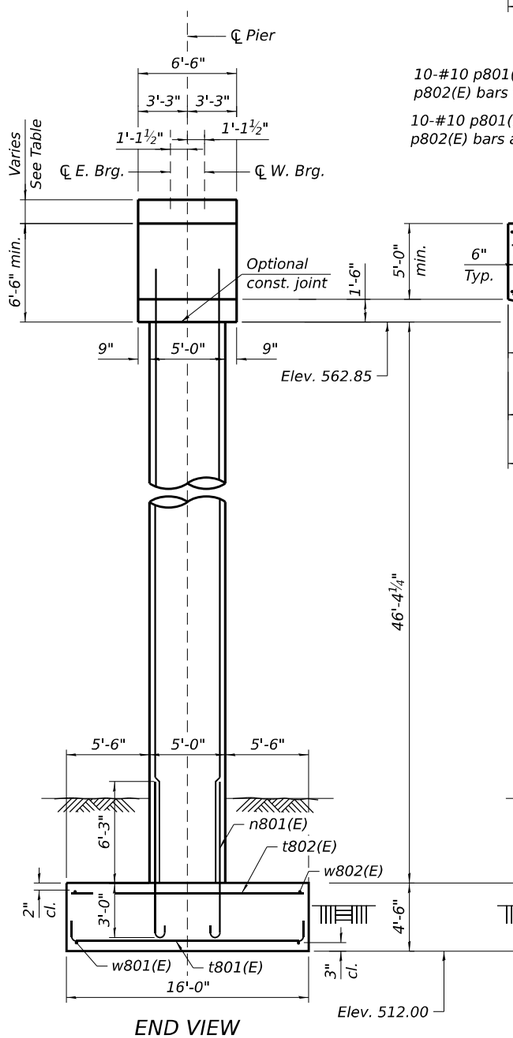

END VIEW

(The maximum applied service bearing pressure, Qmax = 19 ksf)

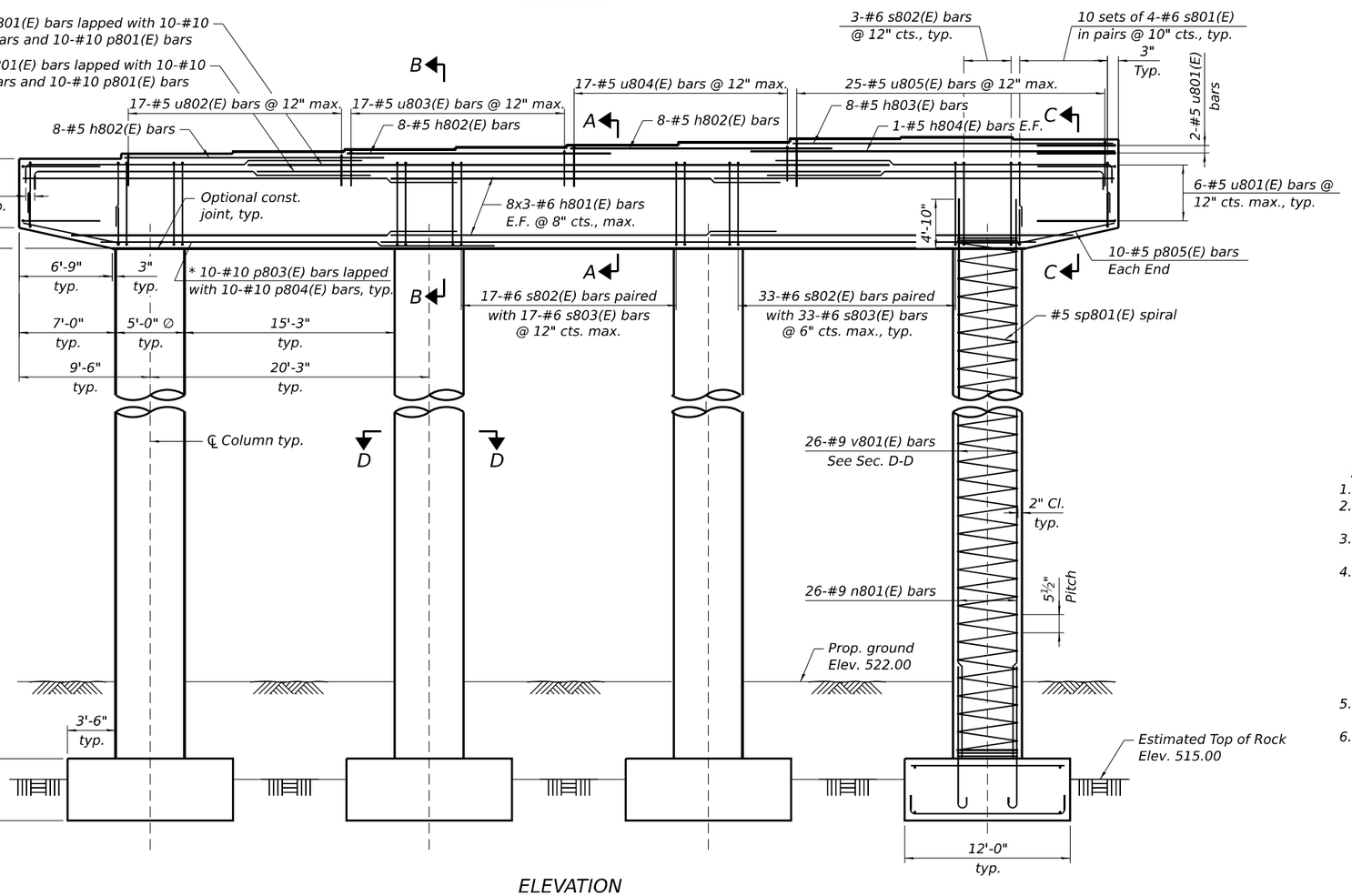

ELEVATION

(Looking East)

NOTES:

1. Cast steps monolithically with cap.
2. Space reinforcement in cap to miss anchor bolts.
3. Bars indicated thus 11x3-#5 etc. indicate 11 lines of bars with 3 segments per line.
4. The bottom of footing elevations shall be adjusted to ensure a minimum embedment of 36 inches in non-weathered rock. The rock excavation shall be made with near-vertical sides at the plan dimensions to allow the sides and base of the embedded portion of the footing to be cast against undisturbed rock surfaces.
5. See sheet S-301 for Footing Plan, Sections A-A thru D-D, and Bill of Material.
6. Spiral reinforcement shall be provided with 1½ extra turns at each end, and extend spiral 2" into pier cap. Provide min. 4-#4 spacers or equivalent.

WSP USA Inc.
30 N. LASALLE STREET
SUITE 4200
CHICAGO, IL 60602
TEL: (312) 782-8150
FAX: (312) 782-1684

USER NAME = USSJ696614	DESIGNED - FIM	REVISED -	
	CHECKED - PJL	REVISED -	
PLOT SCALE = 0:2 ':" / in.	DRAWN - FIM	REVISED -	
PLOT DATE = 11/5/2025	CHECKED - PJL	REVISED -	

STATE OF ILLINOIS
DEPARTMENT OF TRANSPORTATION

PIER 8 WB
STRUCTURE NUMBER 099-8309 WB AND 099-8325 EB

SHEET S-300 OF S-333 SHEETS

F.A.I RTE.	SECTION	COUNTY	TOTAL SHEETS	SHEET NO.
I-80	FAI 80 21 STRUCTURE 2	WILL	1230	881
		CONTRACT NO. 62R23		
	ILLINOIS	FED. AID PROJECT		

MODEL: Default
FILE NAME: pw://transystems-pw.bentley.com:transyscorp-pw1-hosted/Documents/Projects_2018/CH401/401180022/03-WSP/CAD/62R23-RB-1/Sheets/Structural/0998309-62R23-S835-PBWB01.dgn

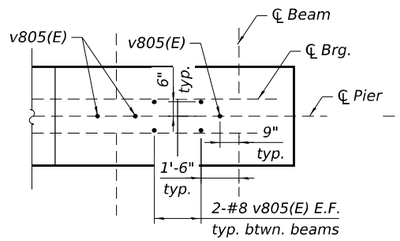

PLAN SHOWING DOWEL LOCATION FOR DIAPHRAGM

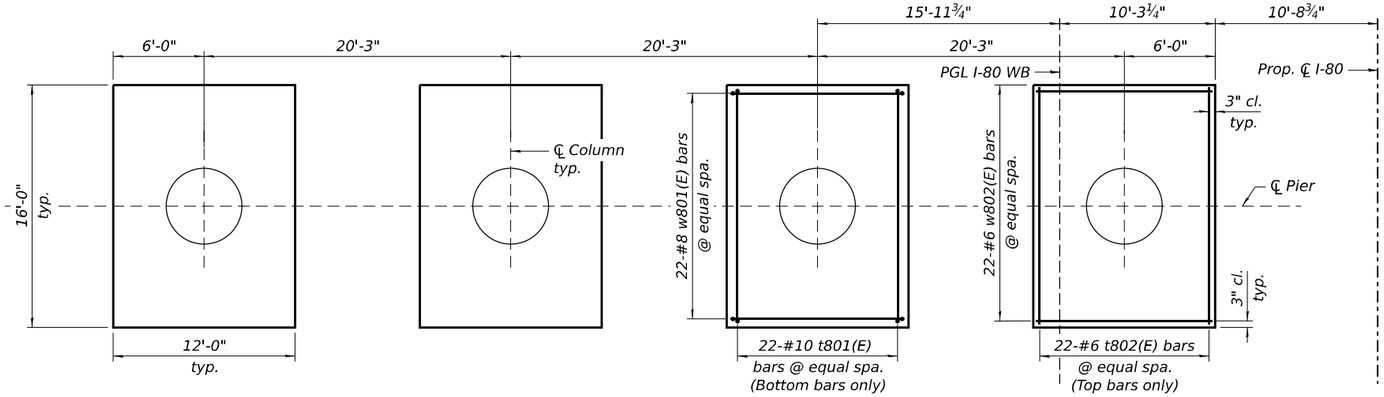

FOOTING PLAN

(Some bars omitted for clarity)

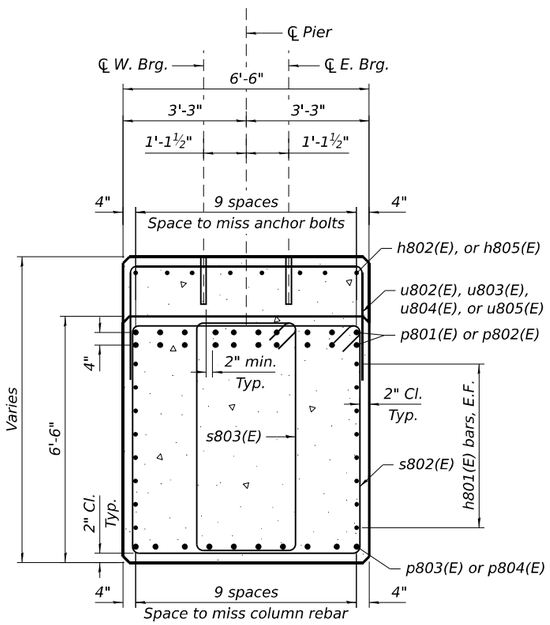

SECTION A-A

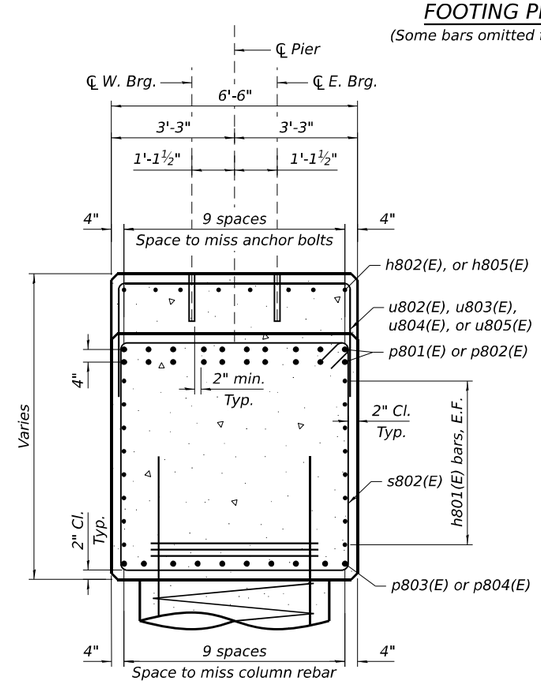

SECTION B-B

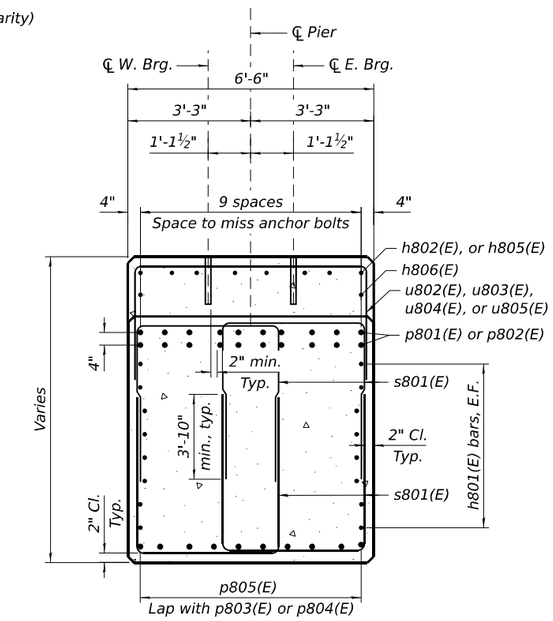

SECTION C-C

BILL OF MATERIAL - PIER 8 WB

	Bar	No.	Size	Length	Shape
	h801(E)	48	#6	29'-5"	
	h802(E)	24	#5	18'-5"	
	h803(E)	8	#5	23'-6"	
	h804(E)	2	#5	26'-1"	
	n801(E)	104	#9	10'-6"	
	p801(E)	40	#10	25'-9"	
	p802(E)	20	#10	49'-2"	
	p803(E)	10	#10	28'-0"	
	p804(E)	10	#10	48'-2"	
	p805(E)	20	#5	10'-4"	
	s801(E)	80	#6	13'-10"	
	s802(E)	95	#6	26'-0"	
	s803(E)	83	#6	19'-0"	
**	sp801(E)	4	#5	46'-6"	
	t801(E)	88	#10	19'-2"	
	t802(E)	88	#6	15'-6"	
	u801(E)	14	#5	13'-4"	
	u802(E)	17	#5	8'-8"	
	u803(E)	17	#5	9'-2"	
	u804(E)	17	#5	9'-10"	
	u805(E)	25	#5	10'-10"	
	v801(E)	104	#9	51'-2"	
	v805(E)	54	#8	4'-2"	
	w801(E)	88	#8	14'-2"	
	w802(E)	88	#6	11'-6"	
	Structure Excavation			Cu. Yd.	332
	Concrete Structures			Cu. Yd.	402.7
	Reinforcement Bars, Epoxy Coated			Pound	66,470
	Rock Excavation for Structures			Cu. Yd.	86

** Length is height of spiral.
Maximum lap for spirals = 3'-0"

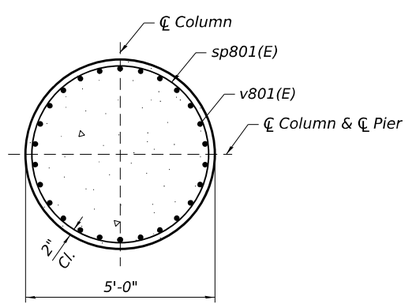

SECTION D-D

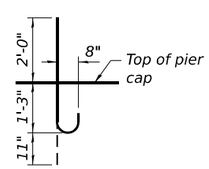

BAR v805(E)

Dowel bar detail

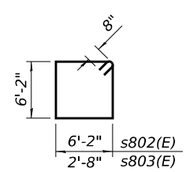

BARS s802(E) & s803(E)

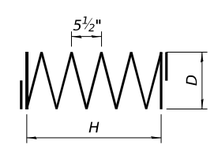

SPIRALS

See table for D and H dimensions

H & D DIMENSIONS

Bar	H	D
sp801(E)	46'-6"	4'-8"

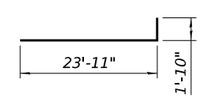

BAR p801(E)

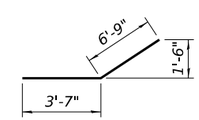

BAR p805(E)

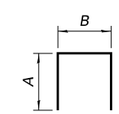

BARS s801(E), t801(E), u801(E) thru u805(E) & w801(E)

See table for A and B dimensions

A & B DIMENSIONS

Bar	A	B
s801(E)	5'-0"	3'-10"
t801(E)	1'-10"	15'-6"
u801(E)	3'-7"	6'-2"
u802(E)	1'-3"	6'-2"
u803(E)	1'-6"	6'-2"
u804(E)	1'-10"	6'-2"
u805(E)	2'-4"	6'-2"
w801(E)	1'-4"	11'-6"

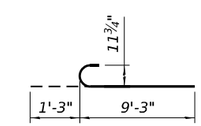

BARS n801(E)

WSP USA Inc.
30 N. LASALLE STREET
SUITE 4200
CHICAGO, IL 60602
TEL: (312) 782-8150
FAX: (312) 782-1684

USER NAME = USSJ696614	DESIGNED - FIM	REVISED -	
	CHECKED - PJL	REVISED -	
PLOT SCALE = 0:2 ':' / in.	DRAWN - FIM	REVISED -	
PLOT DATE = 11/5/2025	CHECKED - PP	REVISED -	

STATE OF ILLINOIS
DEPARTMENT OF TRANSPORTATION

PIER 8 WB DETAILS
STRUCTURE NUMBER 099-8309 WB AND 099-8325 EB

SHEET S-301 OF S-333 SHEETS

F.A.I RTE.	SECTION	COUNTY	TOTAL SHEETS	SHEET NO.
I-80	FAI 80 21 STRUCTURE 2	WILL	1230	882
		CONTRACT NO. 62R23		
	ILLINOIS	FED. AID PROJECT		

MODEL: Default
FILE NAME: pw://transystems-pw.bentley.com:transyscorp-pw1-hosted/Documents/Projects_2018/CH401/401180022/03-WSP/CAD/62R23-RB-1/Sheets/Structural/0998309-62R23-SB36-PBWB02.dgn

BEARING SEAT ELEVATIONS

West Bearings			East Bearings		
Girder	Elevation	Step Ht.	Girder	Elevation	Step Ht.
E1	568.71	2⅜"	E1	568.85	2⅛"
E2	568.91	2¼"	E2	569.03	±1⅞"
E3	569.10	2¼"	E3	569.18	1½"
E4	569.29	2⅛"	E4	569.30	1¾"
E5	569.47	2⅛"	E5	569.45	1¾"
E6	569.65	0"	E6	569.60	2"
E7	569.62	2¼"	E7	569.77	1½"
E8	569.43	2⅛"	E8	569.89	±1¾"
E9	569.25	±5"	E9	569.75	2"
E10	568.84		E10	569.58	1⅞"
			E11	569.42	4⅜"
			E12	569.06	

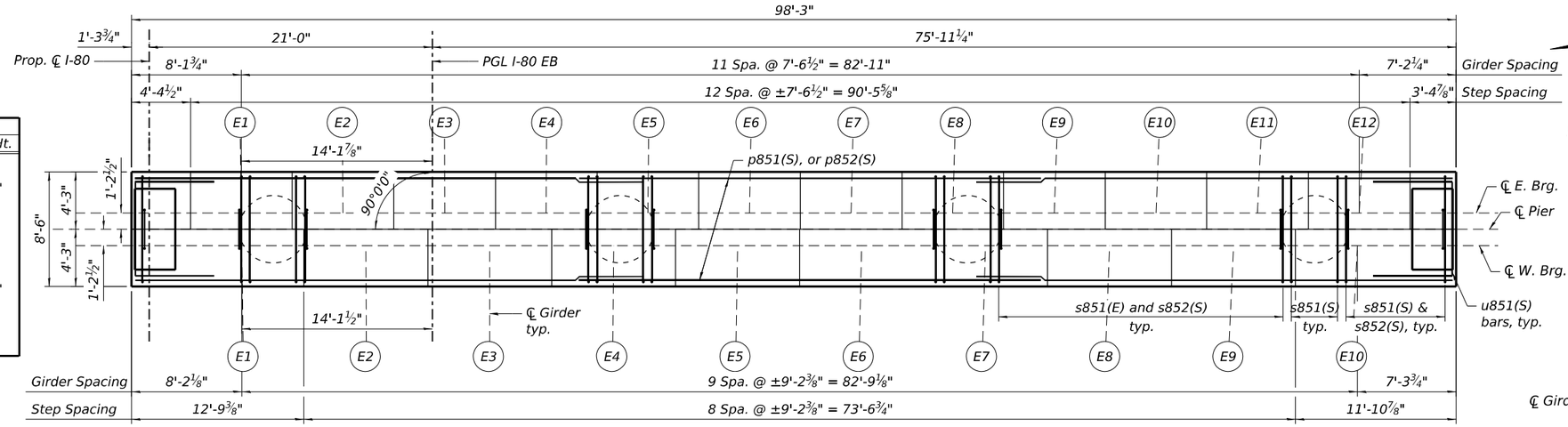

TOP PLAN

MINIMUM BAR LAP

#5 bar (Horiz.) = 3'-7"
#6 bar (Horiz.) = 4'-4"
#6 bar (Vert.) = 3'-10"
#8 bar (Vert.) = 5'-1"
#10 bar (Vert.) = 10'-2"
#11 bar (Horiz.) = 10'-6"

(1) West Brg. Seats
(2) East Brg. Seats

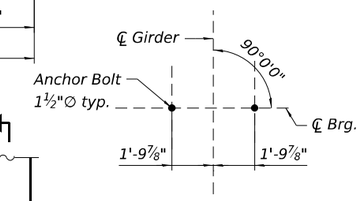

ANCHOR BOLT LAYOUT

(W. Brg. & E. Brg.)

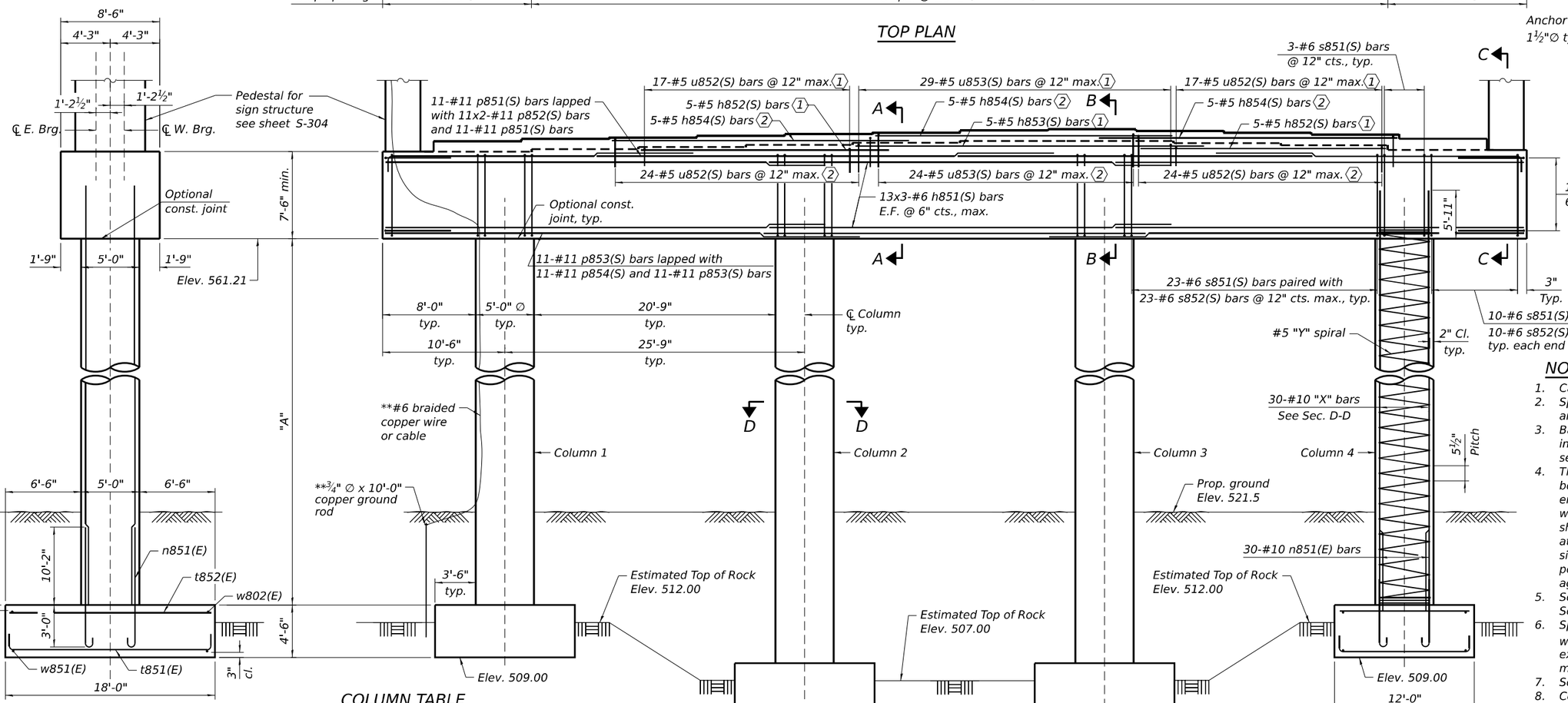

END VIEW

(The maximum applied service bearing pressure, Qmax = 18 ksf)

**Cost of rod, cable and clamps included in the cost of Concrete Structures

COLUMN TABLE

Column	"A"	"X"	"Y"
1-2	47'-8½"	v851(E)	sp851(E)
3-4	52'-8½"	v852(E)	sp852(E)

ELEVATION

(Looking East)

NOTES:

1. Cast steps monolithically with cap.
2. Space reinforcement in cap to miss anchor bolts.
3. Bars indicated thus 11x3-#5 etc. indicate 11 lines of bars with 3 segments per line.
4. The bottom of footing elevations shall be adjusted to ensure a minimum embedment of 36 inches in non-weathered rock. The rock excavation shall be made with near-vertical sides at the plan dimensions to allow the sides and base of the embedded portion of the footing to be cast against undisturbed rock surfaces.
5. See sheet S-303 for Footing Plan, and Sections A-A thru D-D.
6. Spiral reinforcement shall be provided with 1½ extra turns at each end, and extend spiral 2" into pier cap. Provide min. 4-#4 spacers or equivalent.
7. See sheet S-304 for Bill of Material.
8. Concrete Sealer shall be applied to exposed surfaces of pier cap, seats, columns, and wall above grade.
9. Rock elevation shall be field verified due to potential previous utility excavation along this alignment.

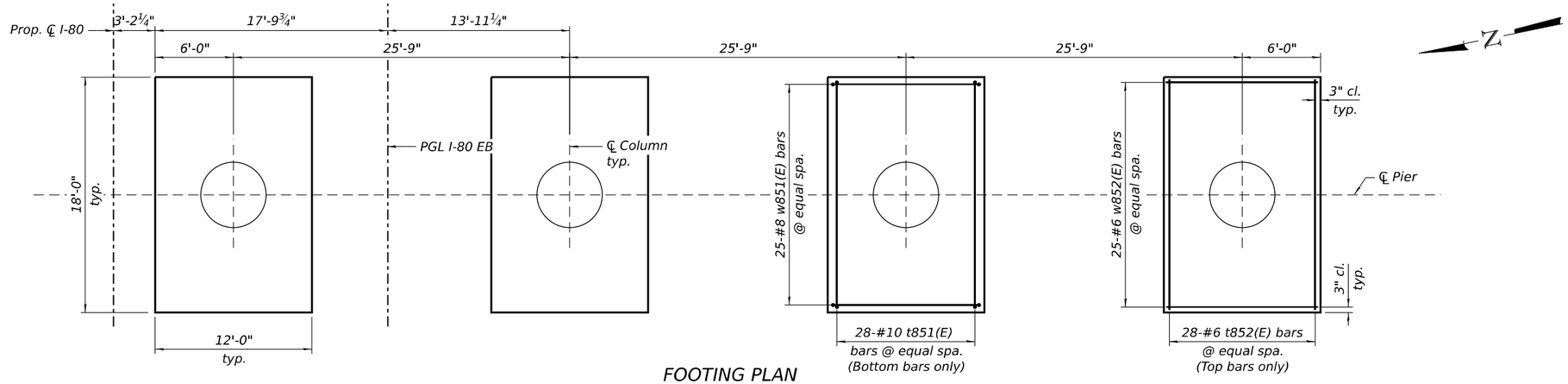

FOOTING PLAN

(Some bars omitted for clarity)

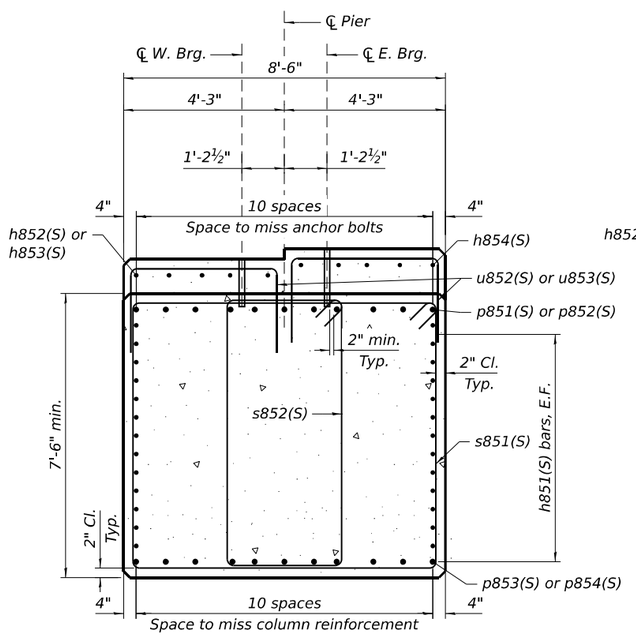

SECTION A-A

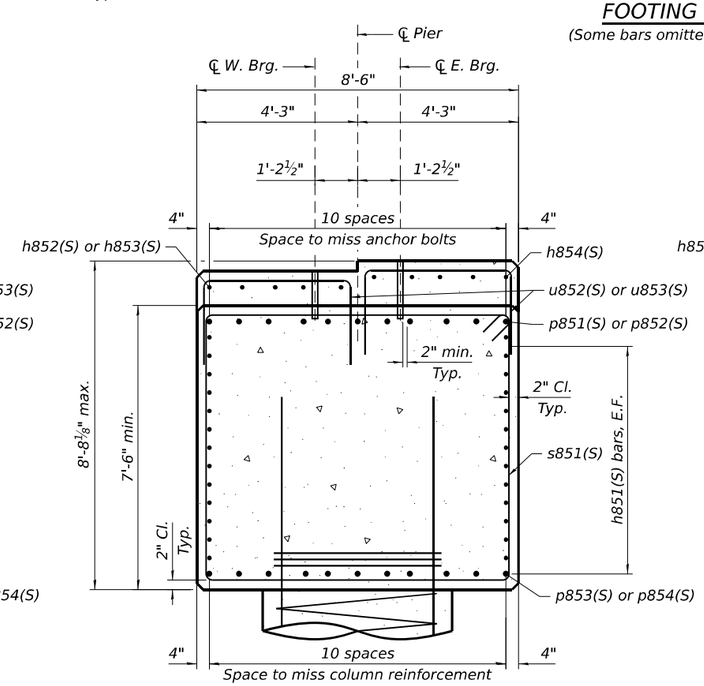

SECTION B-B

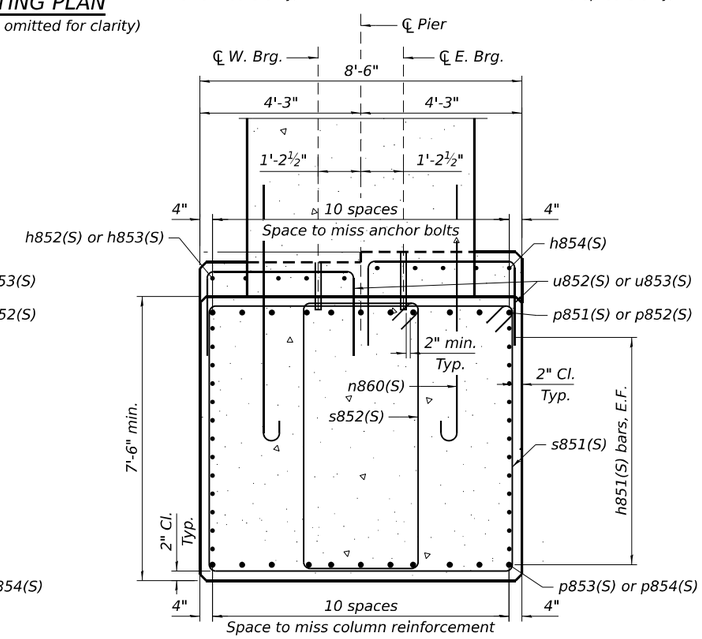

SECTION C-C

For pedestal bars,
see sheet S-272

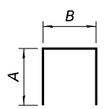

BARS t851(E), u851(S), u852(S), u853(S) & w851(E)

See table for A and B dimensions

A & B DIMENSIONS

Bar	A	B
t851(E)	1'-10"	17'-6"
u851(S)	4'-4"	8'-2"
u852(S)	1'-5"	3'-11"
u853(S)	1'-8"	3'-11"
w851(E)	1'-4"	11'-6"

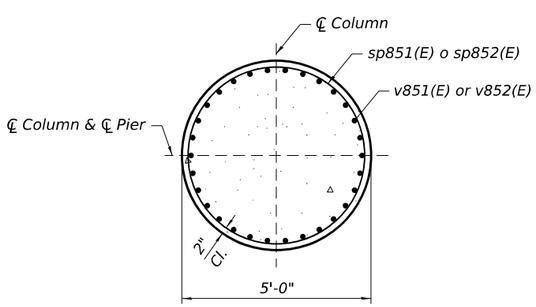

SECTION D-D

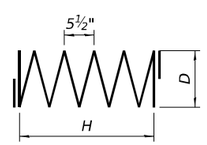

SPIRALS

See table for D and H dimensions

H & D DIMENSIONS

Bar	H	D
sp851(E)	47'-9"	4'-8"
sp852(E)	52'-9"	4'-8"

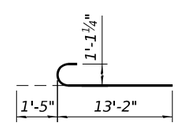

BARS n851(E)

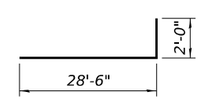

BAR p851(S)

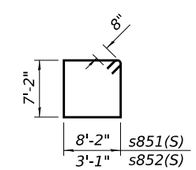

BARS s851(S) & s852(S)

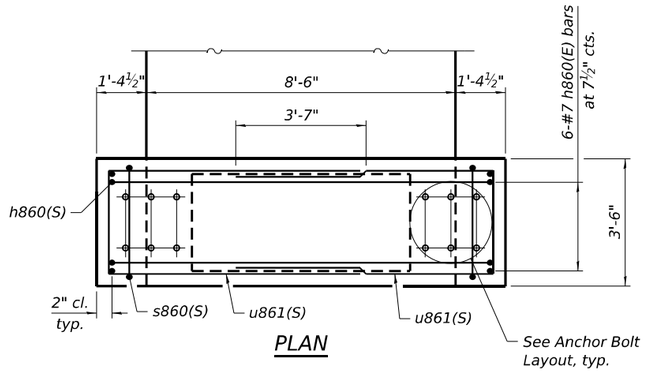

PLAN

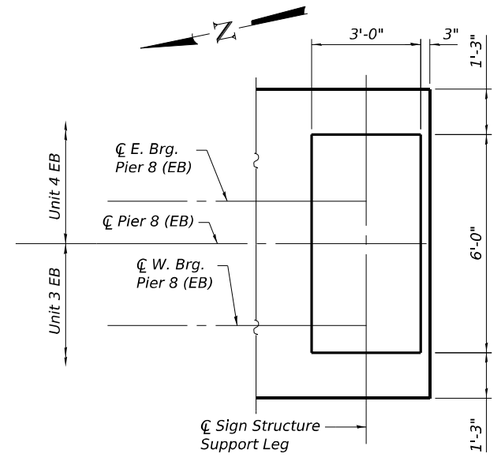

CAP END PLAN

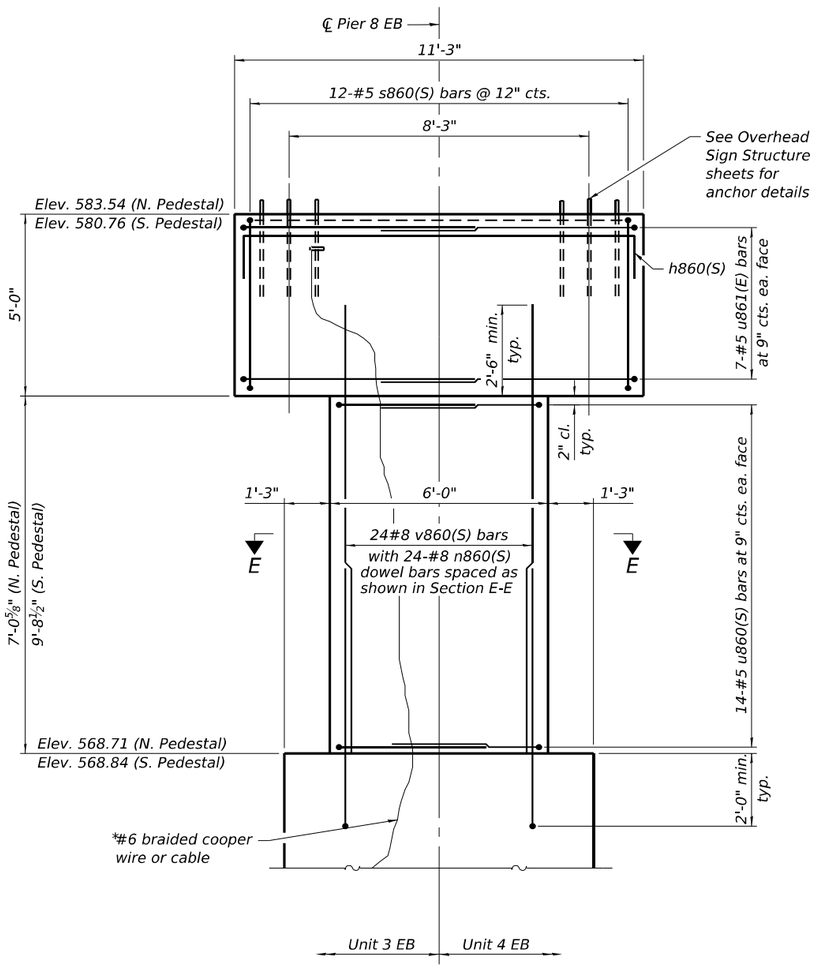

END VIEW
(Looking North)

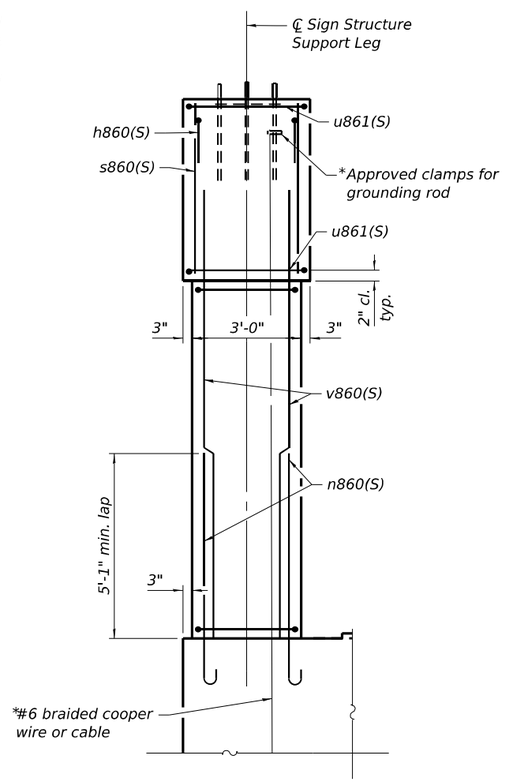

ELEVATION VIEW

*Cost of cable and clamps included in the cost of Concrete Structures

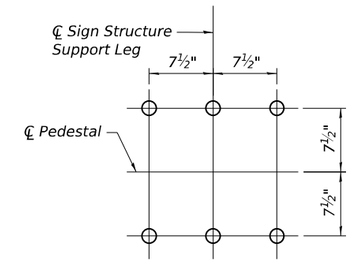

ANCHOR BOLT LAYOUT

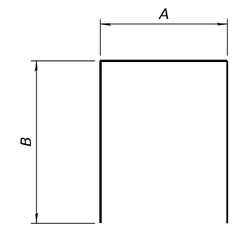

A & B DIMENSIONS

Bar	A	B
h860(S)	10'-11"	1'-3"
u860(S)	2'-8"	4'-8"
u861(S)	3'-1"	7'-3"

BARS h860(S), u860(S), & u861(S)

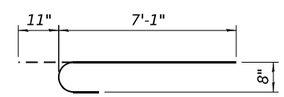

BAR n860(S)

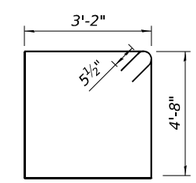

BAR s860(S)

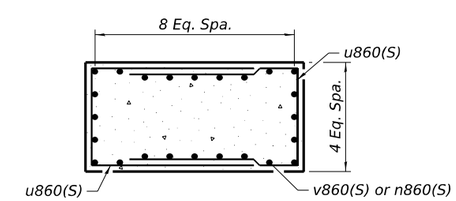

SECTION E-E

BILL OF MATERIAL - PIER 8 EB

	Bar	No.	Size	Length	Shape
	h851(S)	48	#6	35'-7"	
	h852(S)	10	#5	20'-8"	
	h853(S)	5	#5	29'-10"	
	h854(S)	15	#5	24'-11"	
	h860(S)	12	#7	12'-2"	
	n851(E)	120	#10	14'-7"	
	n860(S)	48	#8	8'-0"	
	p851(S)	22	#11	30'-6"	
	p852(S)	22	#11	36'-3"	
	p853(S)	22	#11	41'-4"	
	p854(S)	11	#11	36'-3"	
	s851(S)	101	#6	32'-0"	
	s852(S)	89	#6	21'-10"	
	s860(S)	24	#5	16'-7"	
**	sp851(E)	2	#5	47'-9"	
**	sp852(E)	2	#5	52'-9"	
	t851(E)	112	#10	21'-2"	
	t852(E)	112	#6	17'-6"	
	u851(S)	16	#5	15'-4"	
	u852(S)	82	#5	6'-9"	
	u853(S)	53	#5	7'-3"	
	u860(S)	56	#5	12'-0"	
	u861(S)	28	#5	13'-3"	
	v851(E)	60	#10	53'-6"	
	v852(E)	60	#10	58'-6"	
	v860(E)	48	#8	12'-4"	
	w851(E)	100	#8	14'-2"	
	w852(E)	100	#6	11'-6"	
	Structure Excavation			Cu. Yd.	626
	Rock Excavation for Structures			Cu. Yd.	96
	Concrete Structures			Cu. Yd.	506.0
	Reinforcement Bars, Epoxy Coated			Pound	63,570
	Reinforcement Bars, Stainless Steel			Pound	29,920
	Concrete Sealer			Sq. Ft.	5,570

** Length is height of spiral.
Maximum lap for spirals = 3'-0"

WSP USA Inc.
30 N. LASALLE STREET
SUITE 4200
CHICAGO, IL 60602
TEL: (312) 782-8150
FAX: (312) 782-1684

USER NAME = USSJ696614	DESIGNED - SJJ	REVISED -	
	CHECKED - PJL	REVISED -	
PLOT SCALE = 4:2 ':' / in.	DRAWN - SJJ	REVISED -	
PLOT DATE = 11/6/2025	CHECKED - PJL	REVISED -	

STATE OF ILLINOIS
DEPARTMENT OF TRANSPORTATION

PIER 8 EB DETAILS 2
STRUCTURE NUMBER 099-8309 WB AND 099-8325 EB

SHEET S-304 OF S-333 SHEETS

F.A.I RTE.	SECTION	COUNTY	TOTAL SHEETS	SHEET NO.
I-80	FAI 80 21 STRUCTURE 2	WILL	1230	885
		CONTRACT NO. 62R23		
	ILLINOIS	FED. AID PROJECT		

MINIMUM BAR LAP

#5 bar (Horiz.) = 3'-7"
#6 bar (Horiz.) = 4'-4"
#6 bar (Vert.) = 3'-10"
#9 bar (Vert.) = 6'-3"
#10 bar (Horiz.) = 8'-9"
#11 bar (Horiz.) = 9'-3"

* Alternate locations of laps Lt./Rt. within each row so that no two adjacent bars are lapped at the same location.

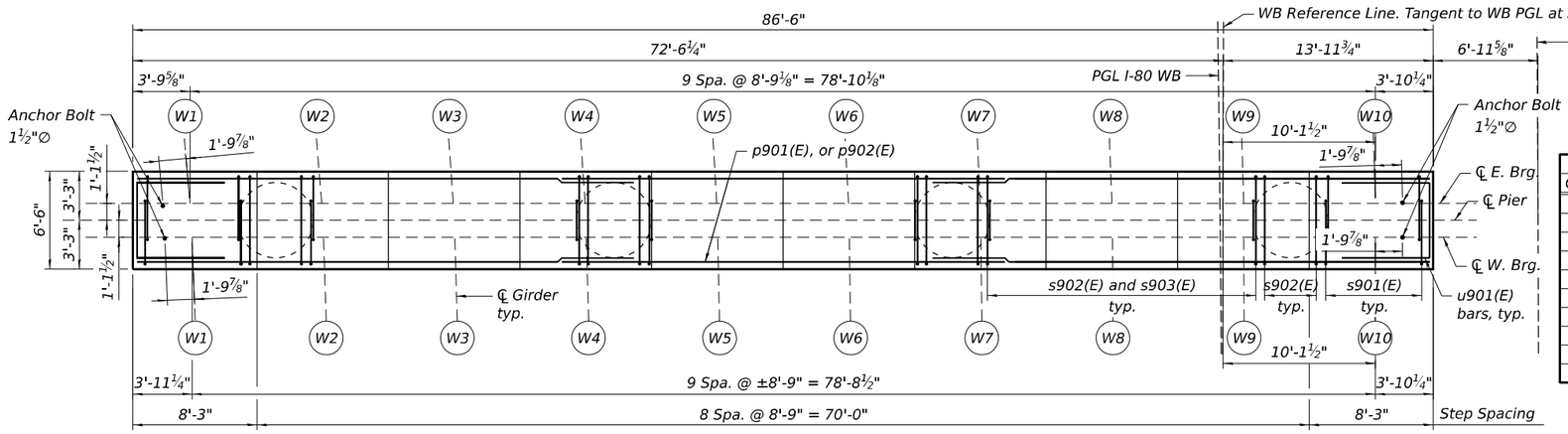

BEARING SEAT ELEVATIONS

West Bearings			East Bearings		
Girder	Elevation	Step Ht.	Girder	Elevation	Step Ht.
W1	562.56	9⅜"	W1	562.48	9⅜"
W2	563.34	6⅜"	W2	563.26	6⅜"
W3	563.87	6"	W3	563.79	6"
W4	564.37	4½"	W4	564.29	4½"
W5	564.75	±4⅜"	W5	564.67	±4⅜"
W6	565.12	±4⅜"	W6	565.04	±4⅜"
W7	565.49	4⅜"	W7	565.41	4⅜"
W8	565.85	4¼"	W8	565.77	4¼"
W9	566.20	2"	W9	566.12	2"
W10	566.03		W10	565.95	

TOP PLAN

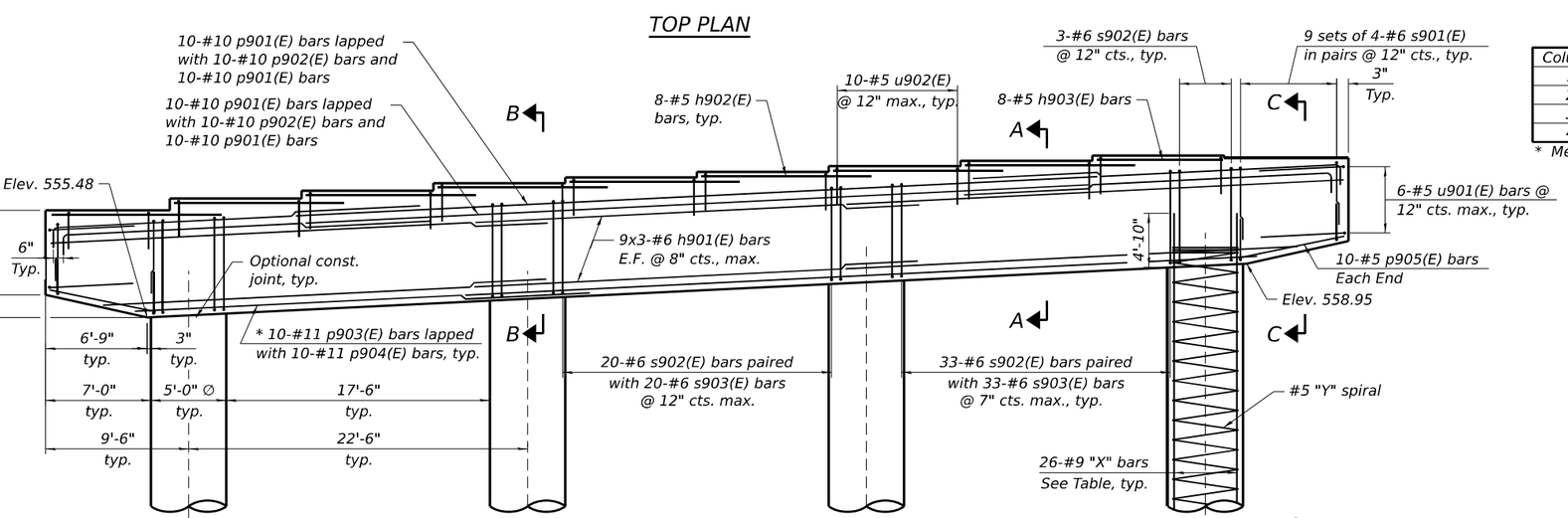

COLUMN TABLE

Column	"A" *	"X"	"Y"
1	42'-7⅜"	v901(E)	sp901(E)
2	43'-8⅛"	v902(E)	sp902(E)
3	53'-9"	v903(E)	sp903(E)
4	54'-9⅞"	v904(E)	sp904(E)

* Measured at ℄ column

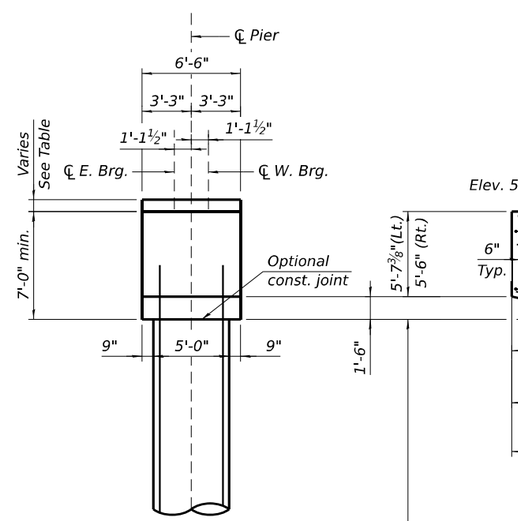

END VIEW

(The maximum applied service bearing pressure, Qmax = 18 ksf)

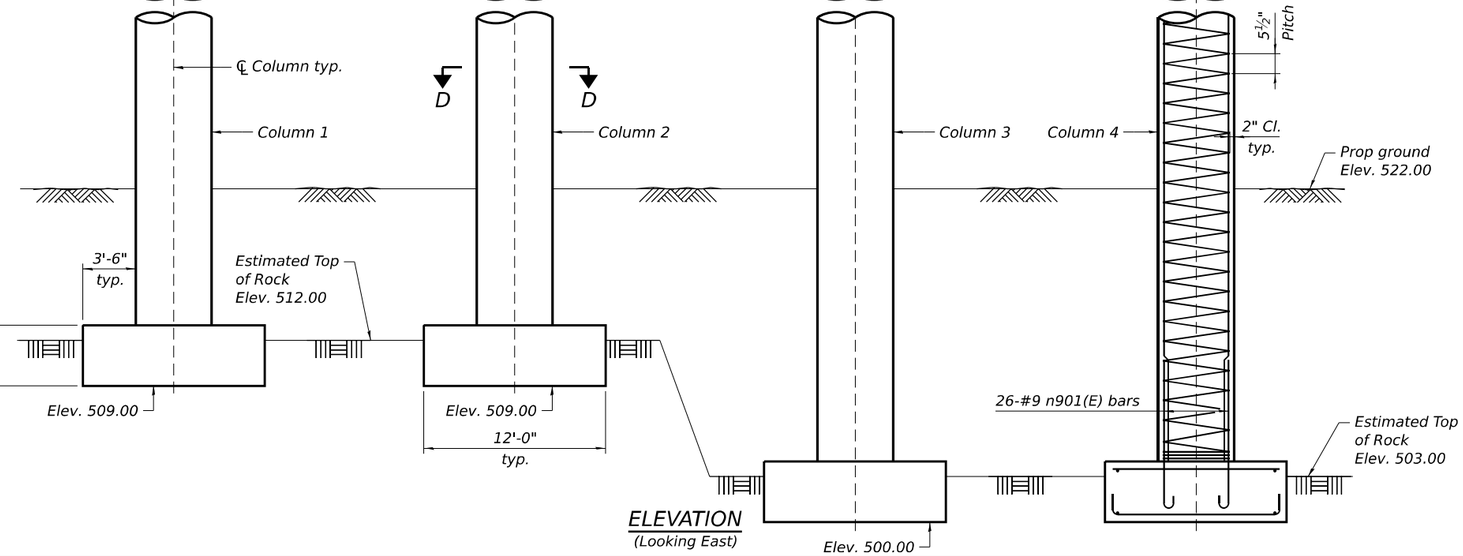

ELEVATION

(Looking East)

NOTES:

1. Cast steps monolithically with cap.
2. Space reinforcement in cap to miss anchor bolts.
3. Bars indicated thus 11x3-#5 etc. indicate 11 lines of bars with 3 segments per line.
4. The bottom of footing elevations shall be adjusted to ensure a minimum embedment of 36 inches in non-weathered rock. The rock excavation shall be made with near-vertical sides at the plan dimensions to allow the sides and base of the embedded portion of the footing to be cast against undisturbed rock surfaces.
5. See sheet S-306 for Footing Plan, Sections A-A thru D-D, and Bill of Material.
6. Spiral reinforcement shall be provided with 1½ extra turns at each end, and extend spiral 2" into pier cap. Provide min. 4-#4 spacers or equivalent.
7. See sheet S-228 for beam skew angles.
8. Rock elevation shall be field verified due to potential previous utility excavation along this alignment.

WSP USA Inc.
30 N. LASALLE STREET
SUITE 4200
CHICAGO, IL 60602
TEL: (312) 782-8150
FAX: (312) 782-1684

USER NAME = USSJ696614	DESIGNED - FIM	REVISED -	
	CHECKED - PJL	REVISED -	
PLOT SCALE = 0:2 ':' / in.	DRAWN - FIM	REVISED -	
PLOT DATE = 11/5/2025	CHECKED - PJL	REVISED -	

STATE OF ILLINOIS
DEPARTMENT OF TRANSPORTATION

PIER 9 WB
STRUCTURE NUMBER 099-8309 WB AND 099-8325 EB

SHEET S-305 OF S-333 SHEETS

F.A.I RTE.	SECTION	COUNTY	TOTAL SHEETS	SHEET NO.
I-80	FAI 80 21 STRUCTURE 2	WILL	1230	886

CONTRACT NO. 62R23

ILLINOIS | FED. AID PROJECT

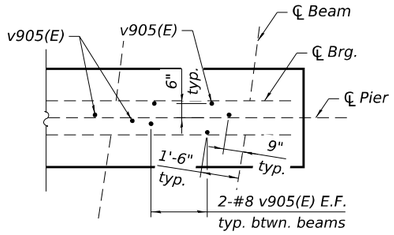

PLAN SHOWING DOWEL LOCATION FOR DIAPHRAGM

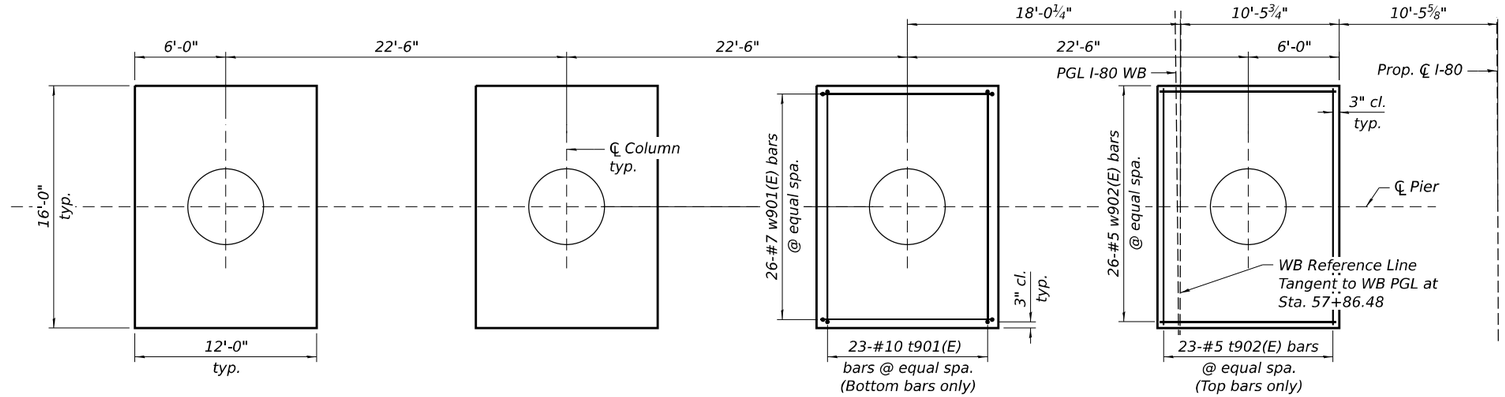

FOOTING PLAN

(Some bars omitted for clarity)

BILL OF MATERIAL - PIER 9 WB

	Bar	No.	Size	Length	Shape
	h901(E)	54	#6	31'-8"	
	h902(E)	64	#5	11'-0"	
	h903(E)	8	#5	8'-5"	
	n901(E)	104	#9	10'-6"	
	p901(E)	40	#10	26'-11"	
	p902(E)	20	#10	53'-9"	
	p903(E)	10	#11	30'-6"	
	p904(E)	10	#11	53'-6"	
	p905(E)	20	#5	10'-4"	
	s901(E)	72	#6	14'-4"	
	s902(E)	98	#6	27'-0"	
	s903(E)	86	#6	20'-0"	
**	sp901(E)	1	#5	42'-9"	
**	sp902(E)	1	#5	43'-10"	
**	sp903(E)	1	#5	53'-11"	
**	sp904(E)	1	#5	55'-0"	
	t901(E)	92	#10	19'-2"	
	t902(E)	92	#5	15'-6"	
	u901(E)	12	#5	13'-4"	
	u902(E)	90	#5	10'-6"	
	v901(E)	26	#9	47'-5"	
	v902(E)	26	#9	48'-6"	
	v903(E)	26	#9	58'-7"	
	v904(E)	26	#9	59'-8"	
	v905(E)	54	#8	4'-2"	
	w901(E)	104	#7	13'-10"	
	w902(E)	104	#5	11'-6"	
	Structure Excavation			Cu. Yd.	688
	Rock Excavation for Structures			Cu. Yd.	86
	Concrete Structures			Cu. Yd.	409.7
	Reinforcement Bars, Epoxy Coated			Pound	69,790

** Length is height of spiral.
Maximum lap for spirals = 3'-0"

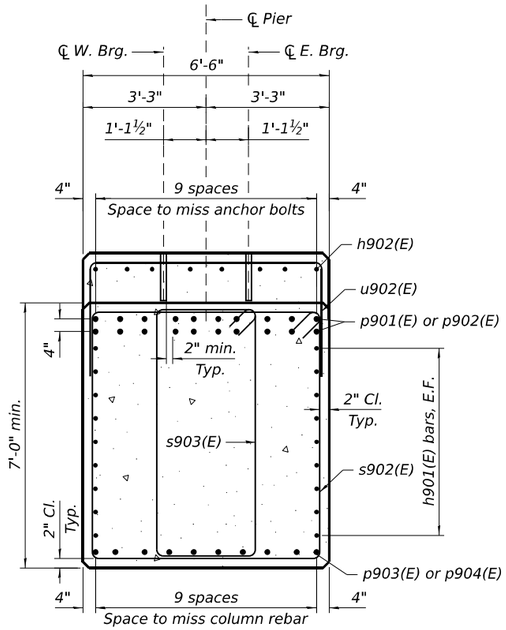

SECTION A-A

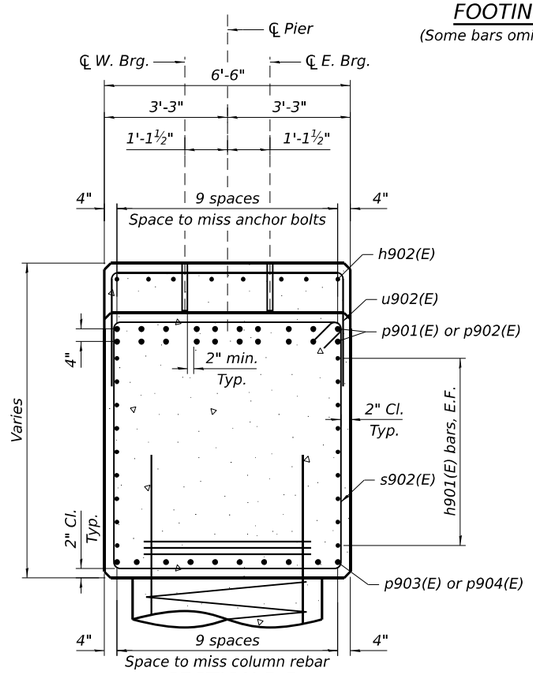

SECTION B-B

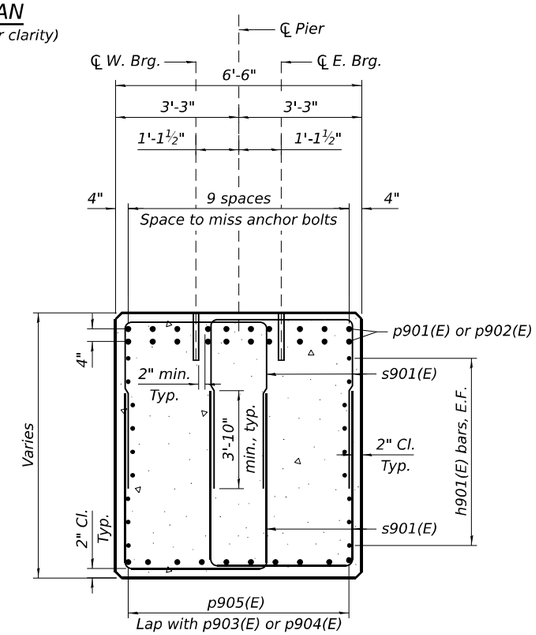

SECTION C-C

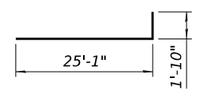

BARS p901(E)

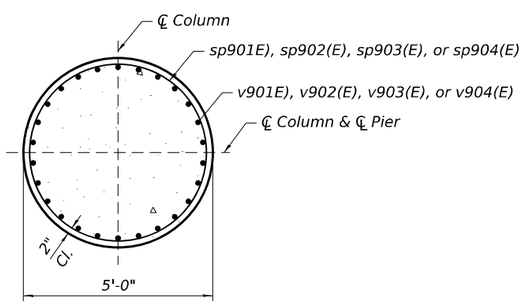

SECTION D-D

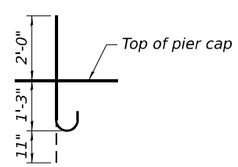

BAR v905(E)

Dowel bar detail

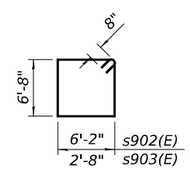

BARS s902(E) & s903(E)

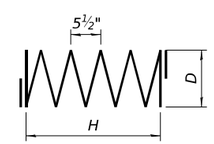

SPIRALS

See table for D and H dimensions

H & D DIMENSIONS

Bar	H	D
sp901(E)	42'-9"	4'-8"
sp902(E)	43'-10"	4'-8"
sp903(E)	53'-11"	4'-8"
sp904(E)	55'-0"	4'-8"

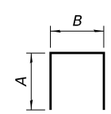

BARS s901(E), t901(E), u901(E), u902(E) & w901(E)

See table for A and B dimensions

A & B DIMENSIONS

Bar	A	B
s901(E)	5'-3"	3'-10"
t901(E)	1'-10"	15'-6"
u901(E)	3'-7"	6'-2"
u902(E)	2'-2"	6'-2"
w901(E)	1'-2"	11'-6"

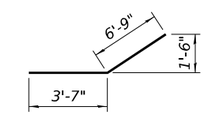

BAR p905(E)

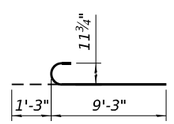

BARS n901(E)

MODEL: Default
FILE NAME: pw://transystems-pw.bentley.com:transyscorp-pw1-hosted/Documents/Projects_2018/CH401/401180022/03-WSP/CAD/62R23-RB-1/Sheets/Structural/0998309-62R23-S841-P9WB02.dgn

WSP USA Inc.
30 N. LASALLE STREET
SUITE 4200
CHICAGO, IL 60602
TEL: (312) 782-8150
FAX: (312) 782-1684

USER NAME = USSJ696614	DESIGNED - FIM	REVISED -	
	CHECKED - PJL	REVISED -	
PLOT SCALE = 0:2 ':" / in.	DRAWN - FIM	REVISED -	
PLOT DATE = 11/5/2025	CHECKED - PJL	REVISED -	

STATE OF ILLINOIS
DEPARTMENT OF TRANSPORTATION

PIER 9 WB DETAILS
STRUCTURE NUMBER 099-8309 WB AND 099-8325 EB

SHEET S-306 OF S-333 SHEETS

F.A.I RTE.	SECTION	COUNTY	TOTAL SHEETS	SHEET NO.
I-80	FAI 80 21 STRUCTURE 2	WILL	1230	887
		CONTRACT NO. 62R23		
	ILLINOIS	FED. AID PROJECT		

MINIMUM BAR LAP

#5 bar (Horiz.) = 3'-7"
#6 bar (Horiz.) = 4'-4"
#6 bar (Vert.) = 3'-10"
#9 bar (Vert.) = 6'-3"
#10 bar (Horiz.) = 8'-9"
#11 bar (Horiz.) = 9'-3"

* Alternate locations of laps Lt./Rt. within each row so that no two adjacent bars are lapped at the same location.

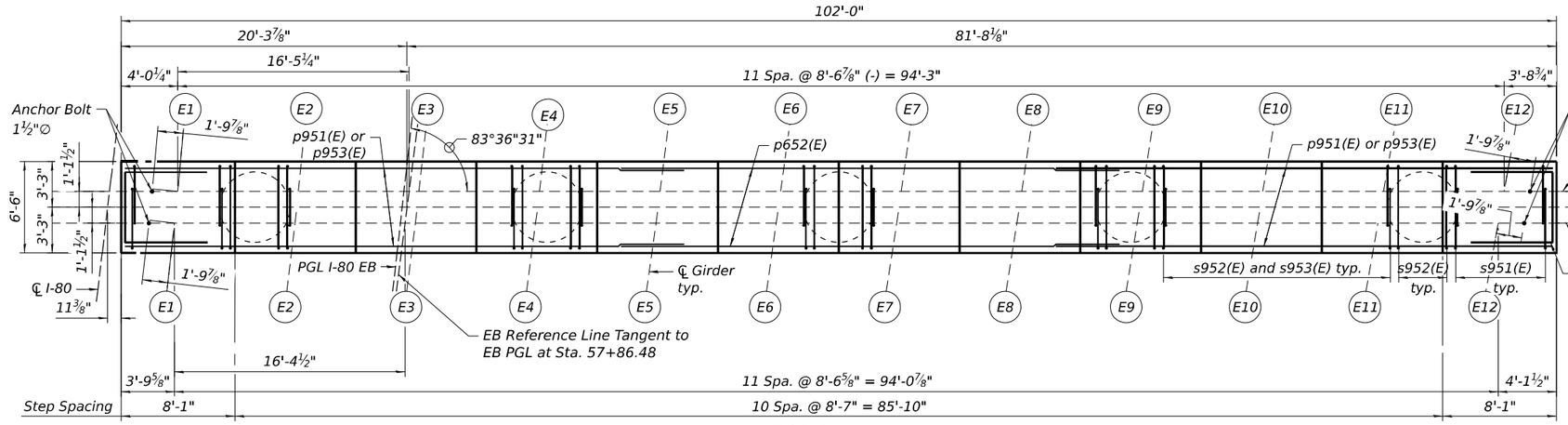

TOP PLAN

BEARING SEAT ELEVATIONS

East and West Bearings		
Girder	Elevation	Step Ht.
E1, W1	564.21	4⅜"
E2, W2	564.57	4⅜" ±
E3, W3	564.94	4½"
E4, W4	565.32	4⅜"
E5, W5	565.68	4⅜"
E6,W6	566.04	4" ±
E7, W7	566.38	1¼"
E8, W8	566.28	2⅝"
E9, W9	566.06	2¼"
E10, W10	565.87	2⅜"
E11, W11	565.67	5"
E12, W12	565.25	

COLUMN TABLE

Column	"A"	"X"	"Y"
1-2	53'-2½"	v951(E)	sp951(E)
3-5	44'-2½"	v952(E)	sp952(E)

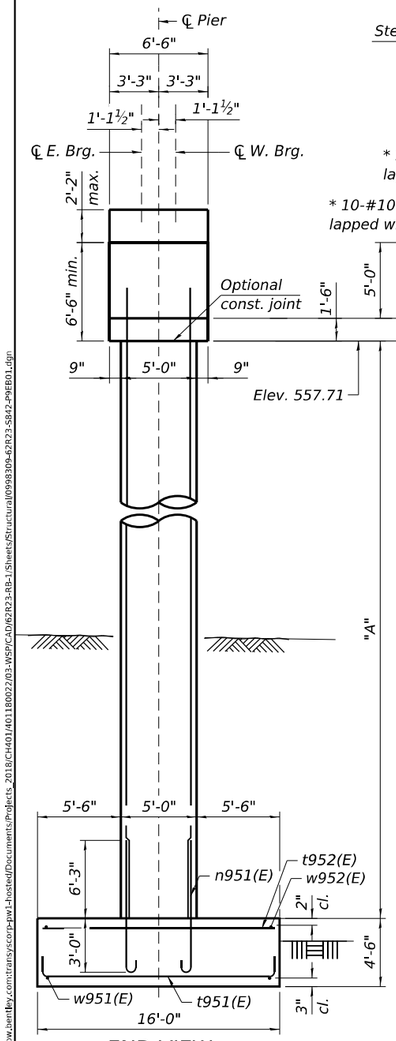

END VIEW

The maximum applied service bearing pressure, Qmax = 20 ksf

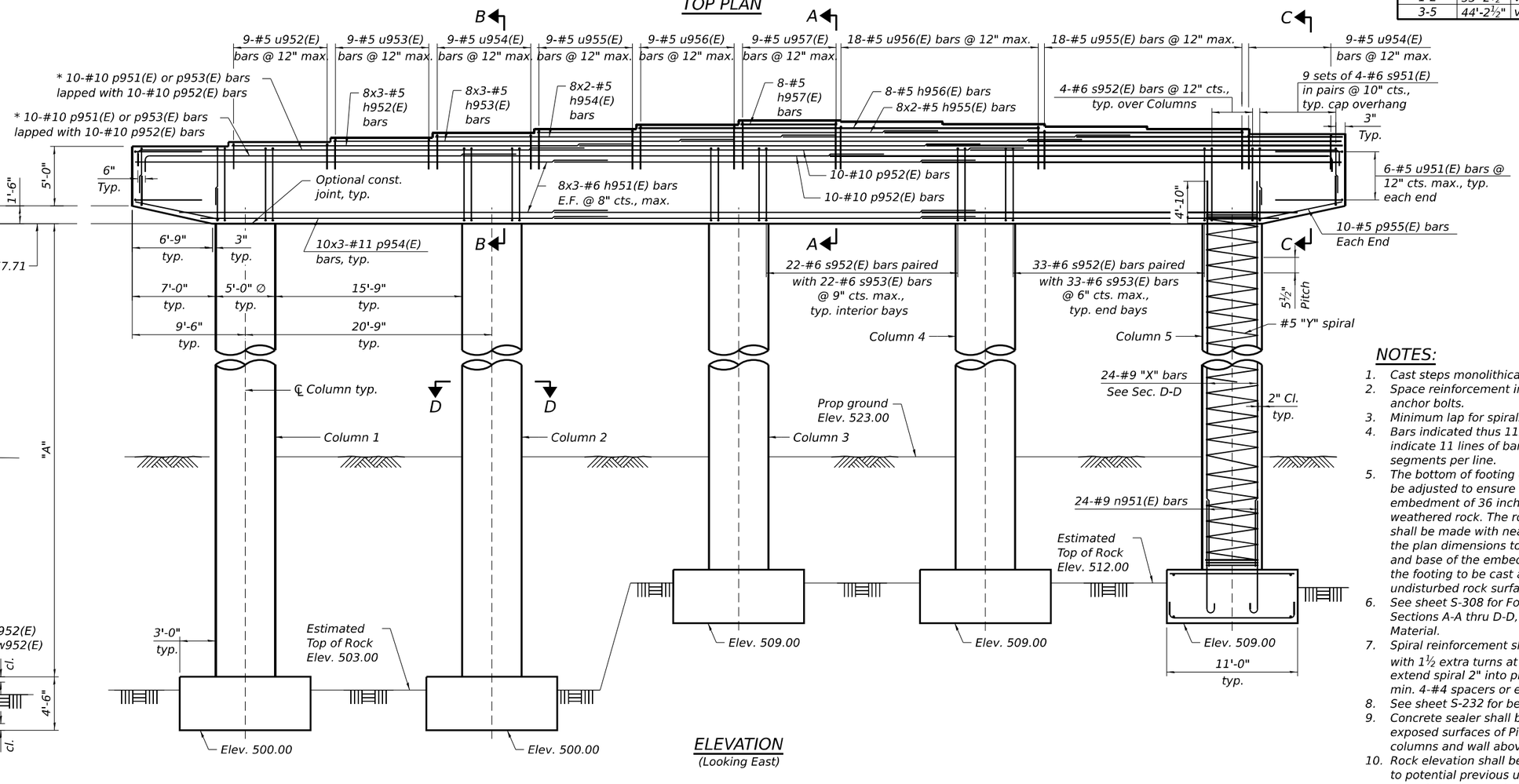

ELEVATION

(Looking East)

NOTES:

1. Cast steps monolithically with cap.
2. Space reinforcement in cap to miss anchor bolts.
3. Minimum lap for spirals = 3'-0".
4. Bars indicated thus 11x3-#5 etc. indicate 11 lines of bars with 3 segments per line.
5. The bottom of footing elevations shall be adjusted to ensure a minimum embedment of 36 inches in non-weathered rock. The rock excavation shall be made with near-vertical sides at the plan dimensions to allow the sides and base of the embedded portion of the footing to be cast against undisturbed rock surfaces.
6. See sheet S-308 for Footing Plan, Sections A-A thru D-D, and Bill of Material.
7. Spiral reinforcement shall be provided with 1½ extra turns at each end, and extend spiral 2" into pier cap. Provide min. 4-#4 spacers or equivalent.
8. See sheet S-232 for beam skew angles.
9. Concrete sealer shall be applied to exposed surfaces of Pier cap, seats, columns and wall above grade.
10. Rock elevation shall be field verified due to potential previous utility excavation along this alignment.

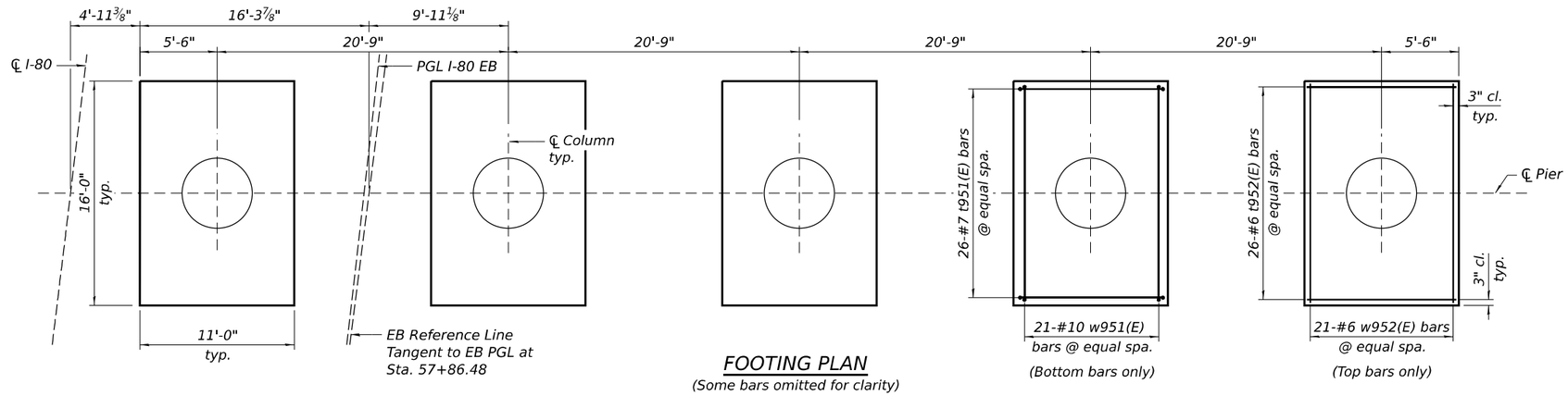

FOOTING PLAN

(Some bars omitted for clarity)

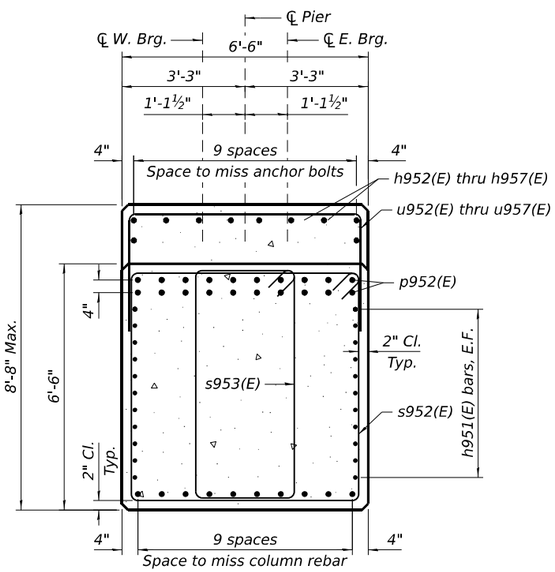

SECTION A-A

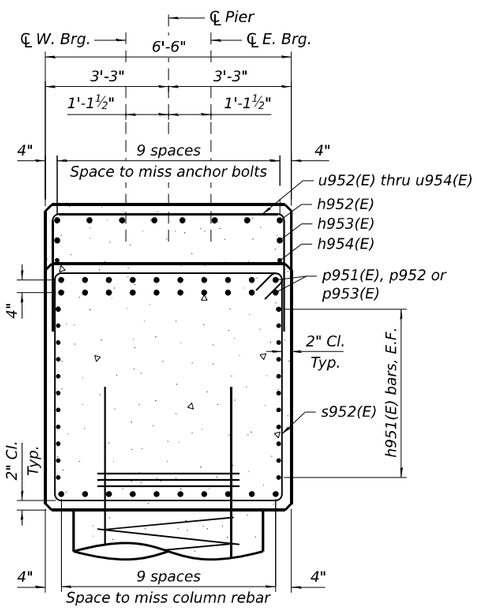

SECTION B-B

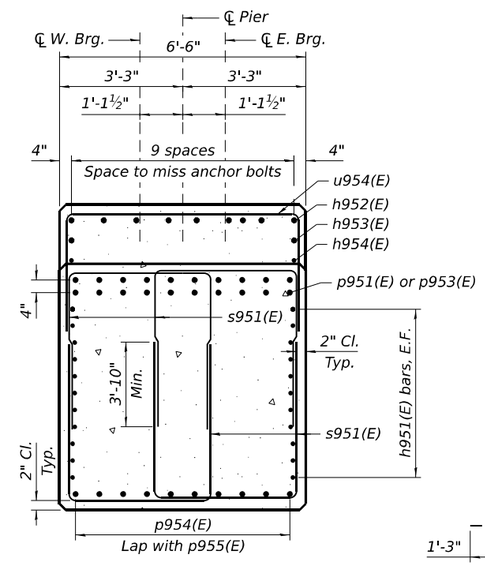

SECTION C-C

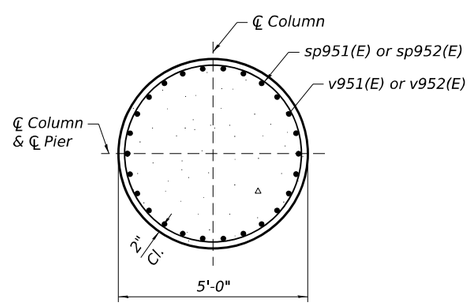

SECTION D-D

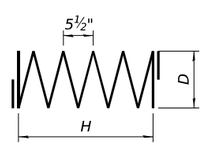

SPIRALS

See table for D and H dimensions

H & D DIMENSIONS

Bar	H	D
sp951(E)	53'-4"	4'-8"
sp952(E)	44'-4"	4'-8"

A & B DIMENSIONS

Bar	A	B
s951(E)	5'-0"	3'-10"
t951(E)	1'-2"	10'-6"
u951(E)	3'-7"	6'-2"
u952(E)	1'-6"	6'-2"
u953(E)	2'-0"	6'-2"
u954(E)	2'-5"	6'-2"
u955(E)	2'-10"	6'-2"
u956(E)	3'-3"	6'-2"
u957(E)	3'-7"	6'-2"
w951(E)	1'-10"	15'-6"

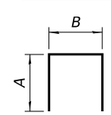

BARS s951(E), t951(E), u951(E), u952(E), u953(E), u954(E), u955(E), u956(E), u957(E) & w951(E)

See table for A and B dimensions

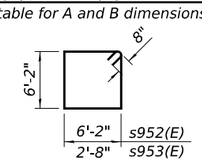

BARS s952(E) & s953(E)

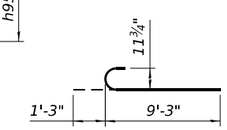

BARS n951(E)

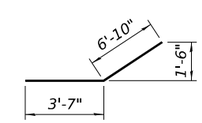

BAR p955(E)

C & D DIMENSIONS

Bar	C	D
p951(E)	45'-5"	1'-10"
p953(E)	33'-9"	1'-10"

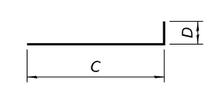

BARS p951(E) & p953(E)

See table for C and D dimensions

BILL OF MATERIAL - PIER 9 EB

	Bar	No.	Size	Length	Shape
	h951(E)	48	#6	36'-9"	
	h952(E)	24	#5	33'-7"	
	h953(E)	24	#5	30'-9"	
	h954(E)	16	#5	40'-0"	
	h955(E)	16	#5	31'-7"	
	h956(E)	8	#5	33'-11"	
	h957(E)	8	#5	8'-3"	
	n951(E)	120	#9	10'-6"	
	p951(E)	20	#10	47'-3"	
	p952(E)	20	#10	40'-0"	
	p953(E)	20	#10	35'-7"	
	p954(E)	30	#11	35'-8"	
	p955(E)	20	#5	10'-5"	
	s951(E)	72	#6	13'-10"	
	s952(E)	130	#6	26'-0"	
	s953(E)	110	#6	19'-0"	
**	sp951(E)	2	#5	53'-4"	
**	sp952(E)	3	#5	44'-4"	
	t951(E)	130	#7	12'-10"	
	t952(E)	130	#6	10'-6"	
	u951(E)	12	#5	13'-4"	
	u952(E)	9	#5	9'-2"	
	u953(E)	9	#5	10'-2"	
	u954(E)	18	#5	11'-0"	
	u955(E)	27	#5	11'-10"	
	u956(E)	27	#5	12'-8"	
	u957(E)	9	#5	13'-4"	
	v951(E)	48	#9	58'-1"	
	v952(E)	72	#9	49'-0"	
	w951(E)	105	#10	19'-2"	
	w952(E)	105	#6	15'-6"	
	Structure Excavation		Cu. Yd.	812	
	Rock Excavation for Structures		Cu. Yd.	98	
	Concrete Structures		Cu. Yd.	510.0	
	Reinforcement Bars, Epoxy Coated		Pound	83,910	

** Length is height of spiral.

MODEL: Default
FILE NAME: pw://transystems-pw.bentley.com:transyscorp-pw1-hosted/Documents/Projects_2018/CH401/401180022/03-WSP/CAD/62R23-RB-1/Sheets/Structural/0998309-62R23-SB43-PNEB02.dgn

WSP USA Inc.
30 N. LASALLE STREET
SUITE 4200
CHICAGO, IL 60602
TEL: (312) 782-8150
FAX: (312) 782-1684

USER NAME = USSJ696614	DESIGNED - FIM	REVISED -	
	CHECKED - PJL	REVISED -	
PLOT SCALE = 0:2 ':" / in.	DRAWN - PP	REVISED -	
PLOT DATE = 11/5/2025	CHECKED - FIM	REVISED -	

STATE OF ILLINOIS
DEPARTMENT OF TRANSPORTATION

PIER 9 EB DETAILS
STRUCTURE NUMBER 099-8309 WB AND 099-8325 EB

SHEET S-308 OF S-333 SHEETS

F.A.I RTE.	SECTION	COUNTY	TOTAL SHEETS	SHEET NO.
I-80	FAI 80 21 STRUCTURE 2	WILL	1230	889
		CONTRACT NO. 62R23		
	ILLINOIS	FED. AID PROJECT		

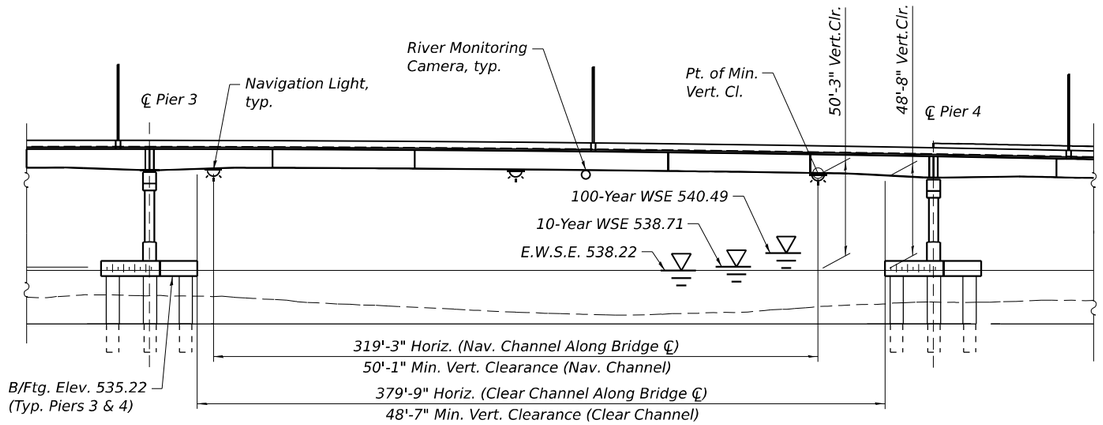

ELEVATION

(Looking North)
(South Fascia EB Shown, WB Similar)

Low Steel Elev. at Point of Min. Vert. Cl. = 588.47

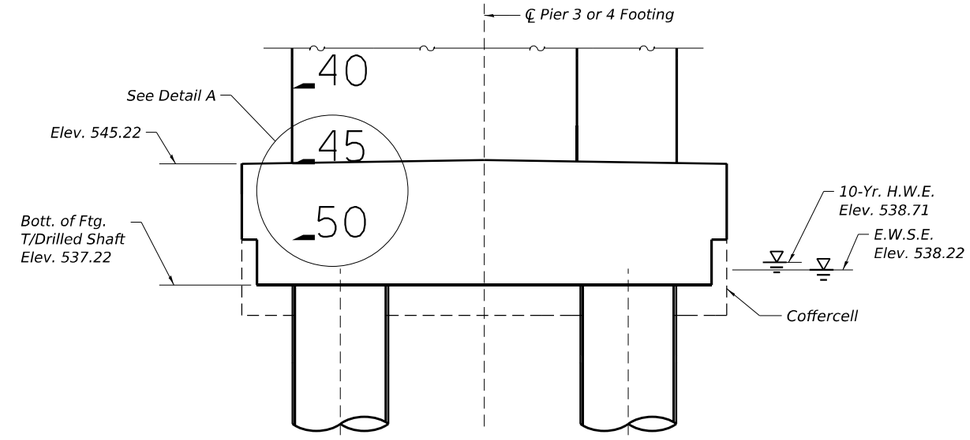

VERTICAL CLEARANCE GAUGE

(AT SOUTH FACE OF EB PIER 3 AND NORTH FACE OF WB PIER 4)

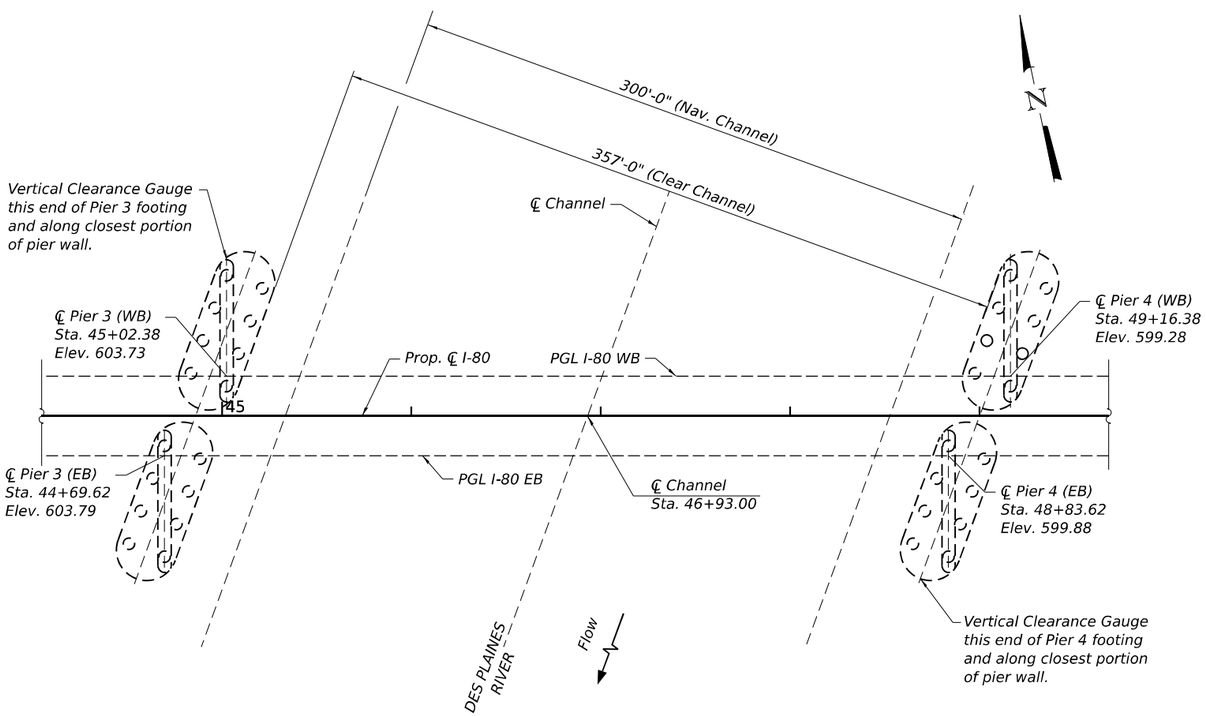

PLAN

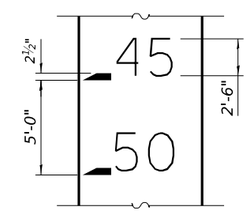

DETAIL A

NOTES:

1. Series-E Numerals shall be use shall conform to "Standard Alphabets for Highway Signs" by U.S. Department of Transportation, Federal Highway Administration, 2011.
2. White background, black numerals and black footmarks shall be painted directly on pier faces. See Special Provisions for "Vertical Clearance Gauge".
3. Dimensions and spacing of text shown are projected dimensions in the horizontal plane of pier face.
4. Manufactured numerals and background materials of the required sizes may be used if approved by the Engineer.
5. Cost of Vertical Clearance Gauges shown included in "Vertical Clearance Gauge."

WSP USA Inc.
30 N. LASALLE STREET
SUITE 4200
CHICAGO, IL 60602
TEL: (312) 782-8150
FAX: (312) 782-1684

USER NAME = USSJ696614	DESIGNED -	REVISED -	
	CHECKED -	REVISED -	
PLOT SCALE = 80:0 ':" / in.	DRAWN -	REVISED -	
PLOT DATE = 11/5/2025	CHECKED -	REVISED -	

STATE OF ILLINOIS
DEPARTMENT OF TRANSPORTATION

PIER CLEARANCE GAUGES
STRUCTURE NUMBER 099-8309 WB AND 099-8325 EB

SHEET S-309 OF S-333 SHEETS

F.A.I RTE.	SECTION	COUNTY	TOTAL SHEETS	SHEET NO.
I-80	FAI 80 21 STRUCTURE 2	WILL	1230	890
		CONTRACT NO. 62R23		
		ILLINOIS	FED. AID PROJECT	

MODEL: Default
FILE NAME: pw://transystems-pw.bentley.com:transyscorp-pw1-hosted/Documents/Projects_2018/CH401/401180022/03-WSP/CAD/62R23-RB-1/Sheets/Structural/0998309-62R23-SB44-PC001.dgn

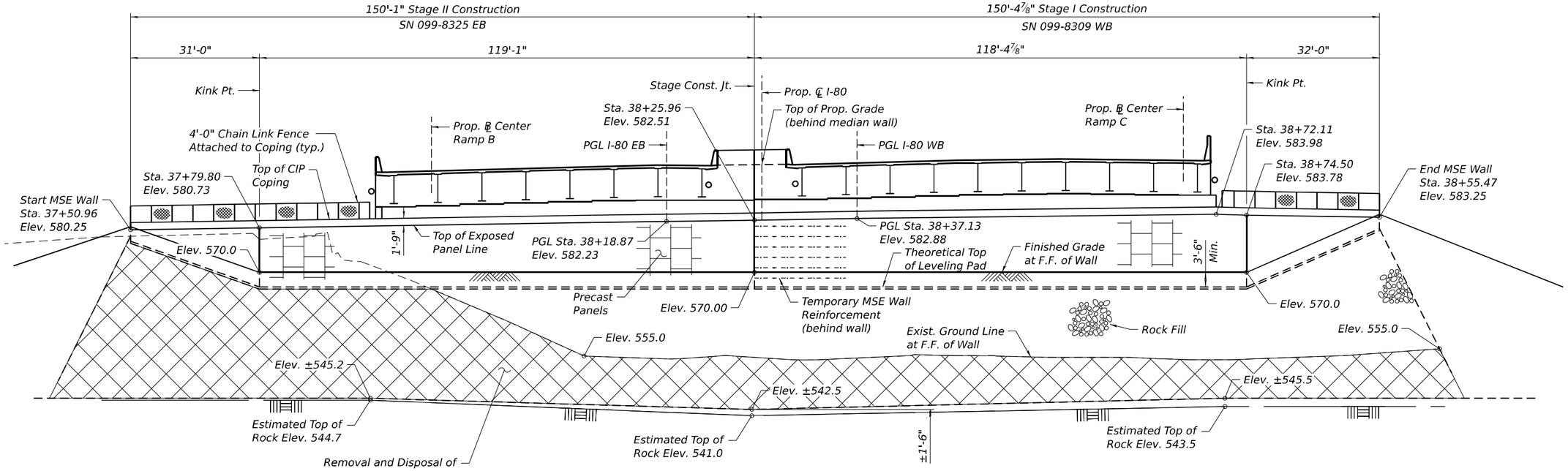

ELEVATION - WEST ABUTMENT MSE WALL

(Looking at F.F. of Wall Unfolded)

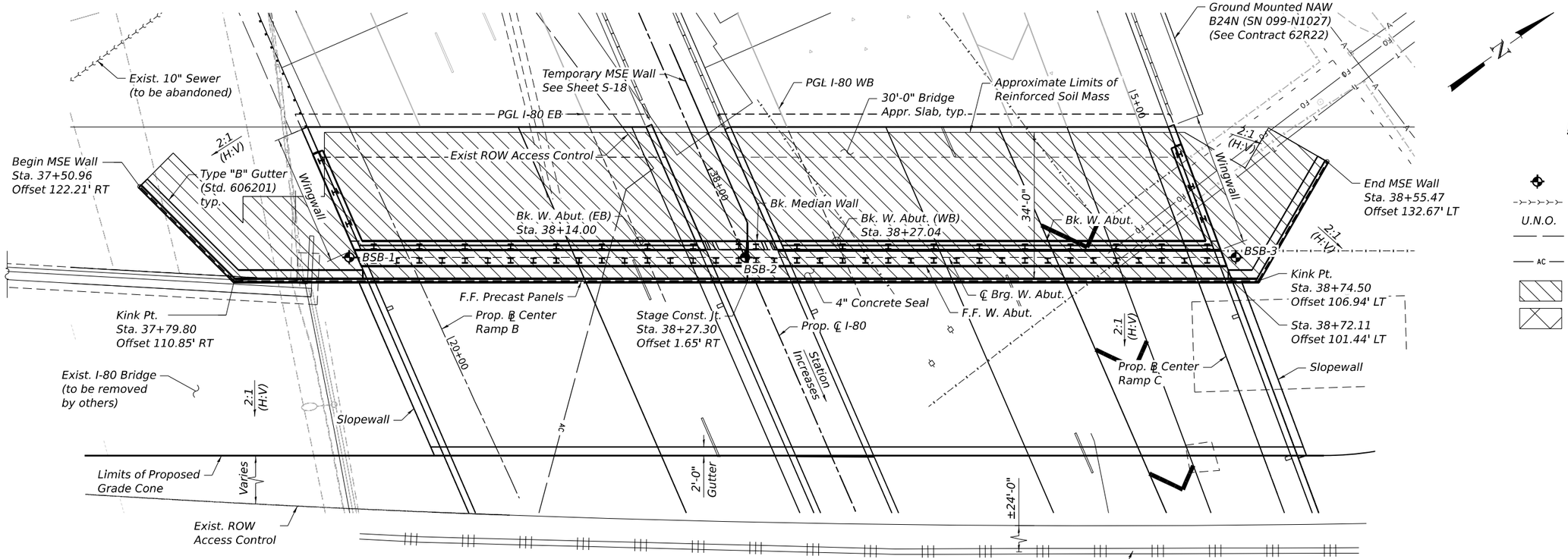

PLAN - WEST ABUTMENT MSE WALL

LEGEND

- Indicates Boring Location
- Existing Sewer
- U.N.O. — Unless Noted Otherwise
- Existing ROW
- AC — Existing ROW for Access Control
- Approximate Limits of Reinforced Soil Mass
- Approximate Limits of Exist. Fill Removal

MODEL: Default
FILE NAME: pw://transystems-pw.bentley.com:transyscorp-pw1-hosted/Documents/Projects_2018/CH401/401180022/03-WSP/CAD/62R23-RB-1/Sheets/Structural/0998309-62R23-S845-A5E01.dgn

WSP USA Inc.
30 N. LASALLE STREET
SUITE 4200
CHICAGO, IL 60602
TEL: (312) 782-8150
FAX: (312) 782-1684

USER NAME = USSJ696614	DESIGNED - PSK	REVISED -	
	CHECKED - PJL	REVISED -	
PLOT SCALE = 26.667 ' / in.	DRAWN - PSK	REVISED -	
PLOT DATE = 11/5/2025	CHECKED - PJL	REVISED -	

STATE OF ILLINOIS
DEPARTMENT OF TRANSPORTATION

MSE WALL PLAN & ELEVATION - WEST ABUTMENT
STRUCTURE NUMBER 099-8309 WB AND 099-8325 EB

SHEET S-310 OF S-333 SHEETS

F.A.I RTE.	SECTION	COUNTY	TOTAL SHEETS	SHEET NO.
I-80	FAI 80 21 STRUCTURE 2	WILL	1230	891
		CONTRACT NO. 62R23		
		ILLINOIS	FED. AID PROJECT	

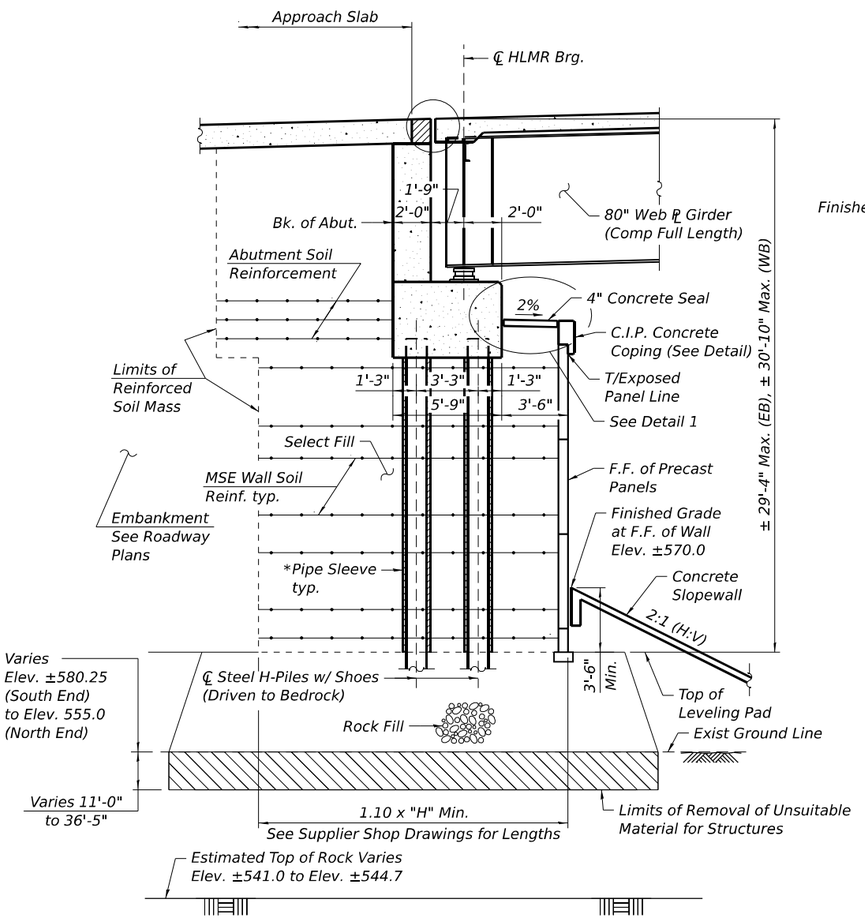

SECTION THRU WEST ABUTMENT

(Looking North)
(Horiz. Dims @ Rt. L's to ℄ Abutment)
*Sleeves shall be placed to top of leveling pad.
Fill sleeve with clean sand after piles are driven.

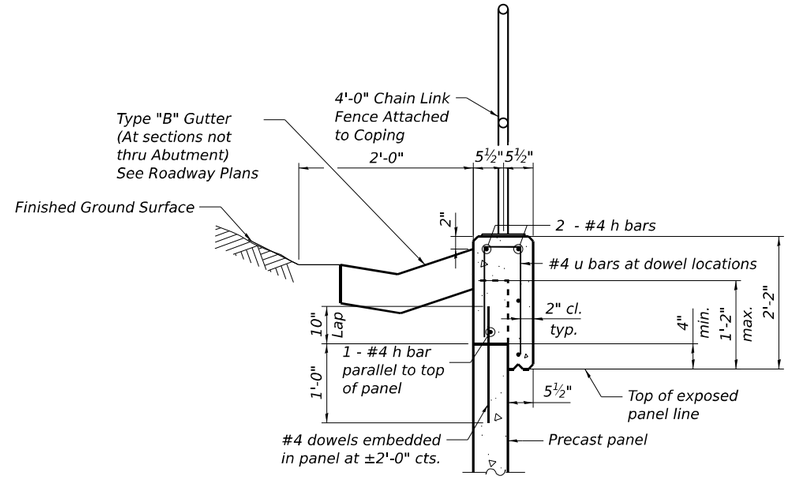

CAST IN PLACE COPING FOR MSE WALL PANELS

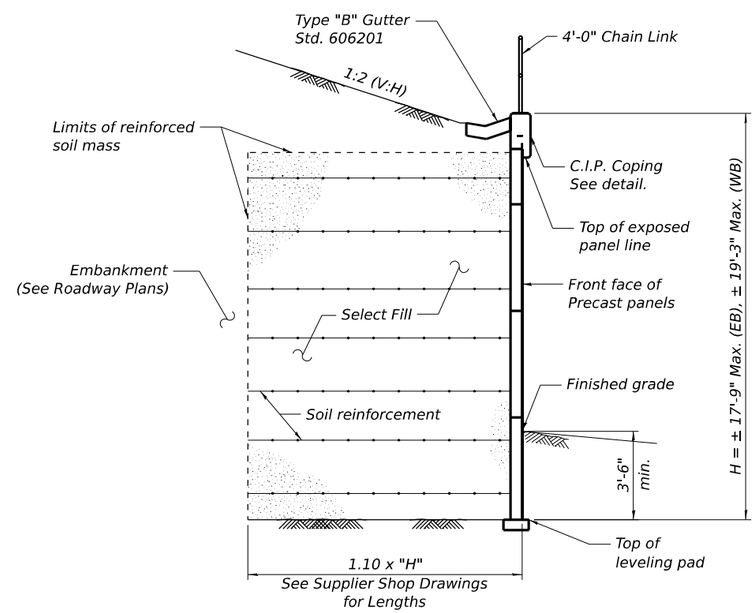

SECTION THRU MSE WALL

(Horiz. dim. @ L's)

BILL OF MATERIAL - WB

Item	Unit	Quantity
Removal and Disposal of Unsuitable Material for Structures	Cu Yd	1,604
Mechanically Stabilized Earth Retaining Wall	Sq Ft	2,311
Chain Link Fence, 4' Attached to Structure	Foot	43
Rock Fill	Cu Yd	4,627

BILL OF MATERIAL - EB

Item	Unit	Quantity
Removal and Disposal of Unsuitable Material for Structures	Cu Yd	3,323
Mechanically Stabilized Earth Retaining Wall	Sq Ft	2,064
Chain Link Fence, 4' Attached to Structure	Foot	63
Rock Fill	Cu Yd	4,306

NOTES:

1. Bottom of abutment cap shall be poured against the top of plywood cap. Cut opening to match pile cap perimeter within ⅛". Support with bars tack welded to webs rated for 500 lbs. Seal gaps to keep concrete out.
2. The M.S.E. wall supplier shall design the abutment soil reinforcement to resist a horizontal forces of 5.67 kips/ft. of abutment.
2. Reinforcing for Cast in Place Coping shown for information only, cost included with Mechanically Stabilized Earth Retaining Wall.

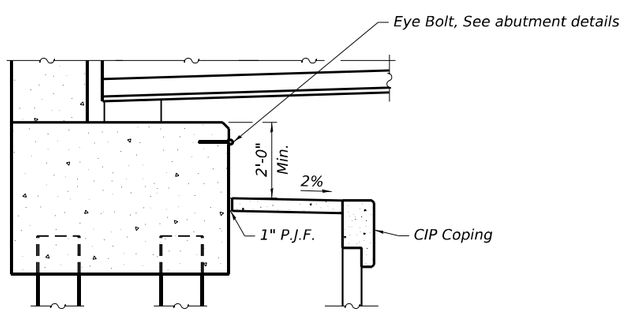

DETAIL 1

MODEL: Default
FILE NAME: pw://transystems-pw.bentley.com:transyscorp-pw1-hosted/Documents/Projects_2018/CH401/401180022/03-WSP/CAD/62R23-RB-1/Sheets/Structural/0998309-62R23-S846-MSE02.dgn

WSP USA Inc.
30 N. LASALLE STREET
SUITE 4200
CHICAGO, IL 60602
TEL: (312) 782-8150
FAX: (312) 782-1684

USER NAME = USSJ696614	DESIGNED - PP	REVISED -	
	CHECKED - PJL	REVISED -	
PLOT SCALE = 8.000 ' / in.	DRAWN - PP	REVISED -	
PLOT DATE = 11/5/2025	CHECKED - PJL	REVISED -	

STATE OF ILLINOIS
DEPARTMENT OF TRANSPORTATION

MSE WALL DETAILS - WEST ABUTMENT
STRUCTURE NUMBER 099-8309 WB AND 099-8325 EB

SHEET S-311 OF S-333 SHEETS

F.A.I RTE.	SECTION	COUNTY	TOTAL SHEETS	SHEET NO.
I-80	FAI 80 21 STRUCTURE 2	WILL	1230	892
		CONTRACT NO. 62R23		
		ILLINOIS	FED. AID PROJECT	

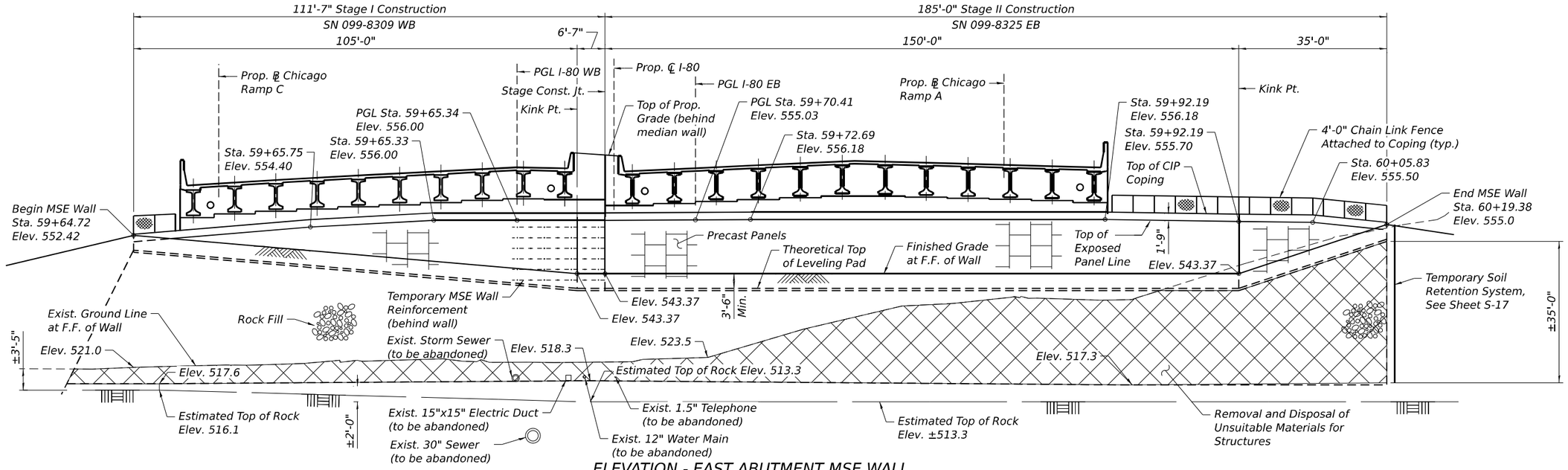

ELEVATION - EAST ABUTMENT MSE WALL

(Looking at F.F. of Wall Unfolded)

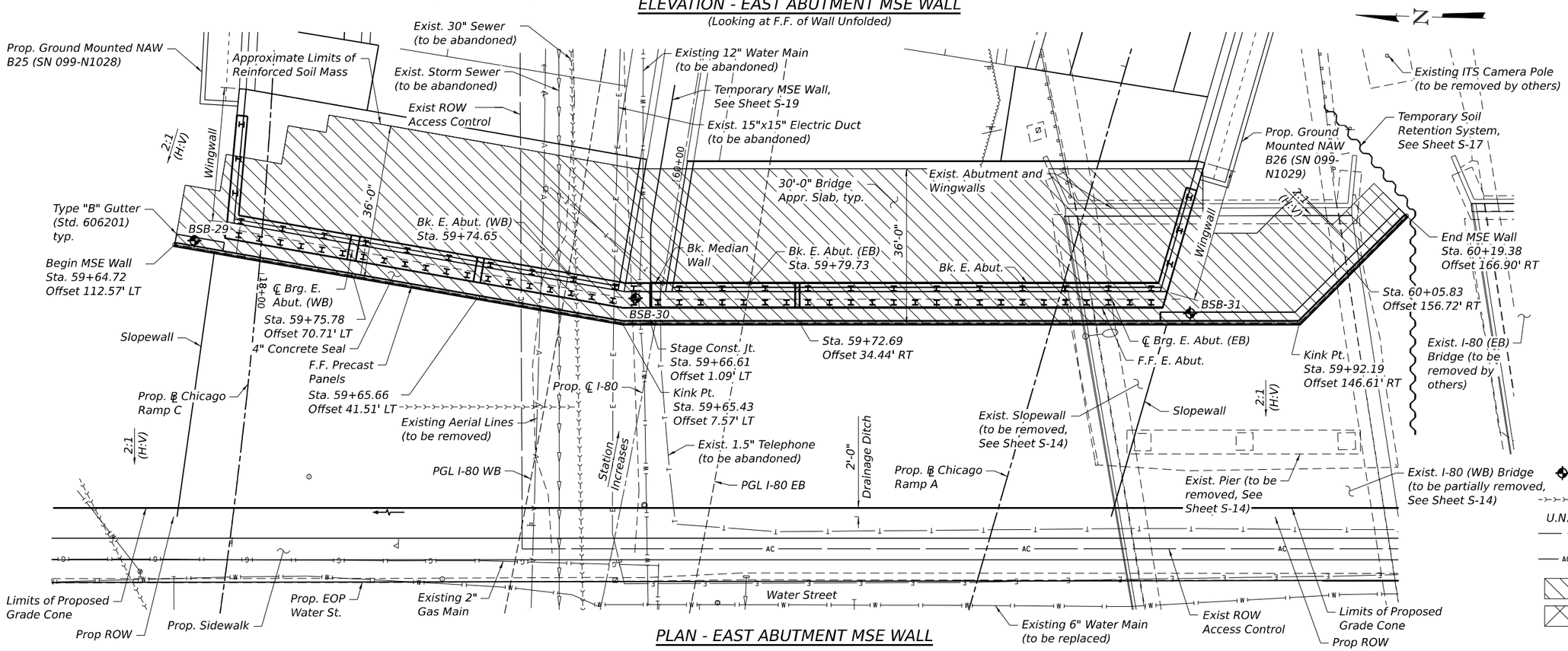

PLAN - EAST ABUTMENT MSE WALL

LEGEND

✥	Indicates Boring Location
-><-><-><-	Existing Sewer
U.N.O.	Unless Noted Otherwise
—— ——	Existing ROW
—— AC ——	Existing ROW for Access Control
	Approximate Limits of Reinforced Soil Mass
	Approximate Limits of Exist. Fill Removal

MODEL: Default
FILE NAME: pw://transystems-pw.bentley.com:transyscorp-pw1-hosted/Documents/Projects_2018/CH401/401180022/03-WSP/CAD/62R23-RB-1/Sheets/Structural/0998309-62R23-S872-AKE503.dgn

WSP USA Inc.
30 N. LASALLE STREET
SUITE 4200
CHICAGO, IL 60602
TEL: (312) 782-8150
FAX: (312) 782-1684

USER NAME = USSJ696614	DESIGNED - PSK	REVISED -	
	CHECKED - PSK	REVISED -	
PLOT SCALE = 26.667 ' / in.	DRAWN - PP	REVISED -	
PLOT DATE = 11/5/2025	CHECKED - PJL	REVISED -	

STATE OF ILLINOIS
DEPARTMENT OF TRANSPORTATION

EAST ABUTMENT MSE WALL PLAN AND ELEVATION
STRUCTURE NUMBER 099-8309 WB AND 099-8325 EB

SHEET S-312 OF S-333 SHEETS

F.A.I RTE.	SECTION	COUNTY	TOTAL SHEETS	SHEET NO.
I-80	FAI 80 21 STRUCTURE 2	WILL	1230	893
		CONTRACT NO. 62R23		
	ILLINOIS	FED. AID PROJECT		

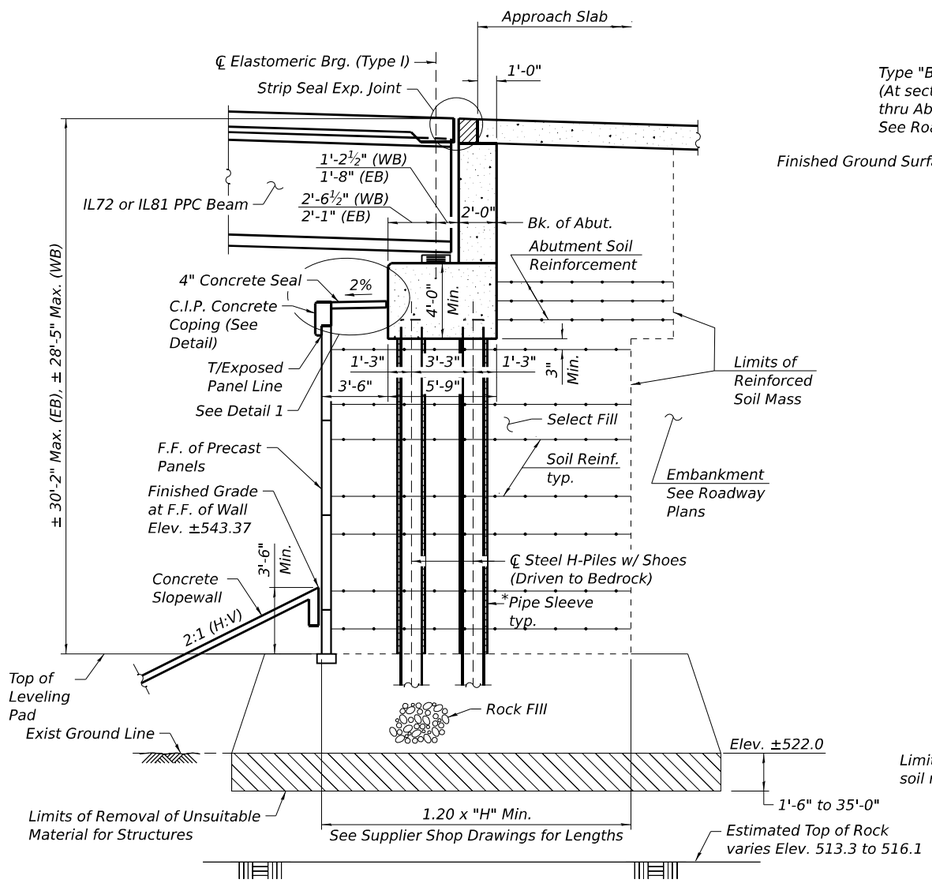

SECTION THRU EAST ABUTMENT

(Looking North)
(Horiz. Dims @ Rt. L's to ℄ Abutment)
Showing WB Abutment, EB Similar Except as Noted

*Sleeves shall be placed to top of leveling pad.
Fill sleeve with clean sand after piles are driven.

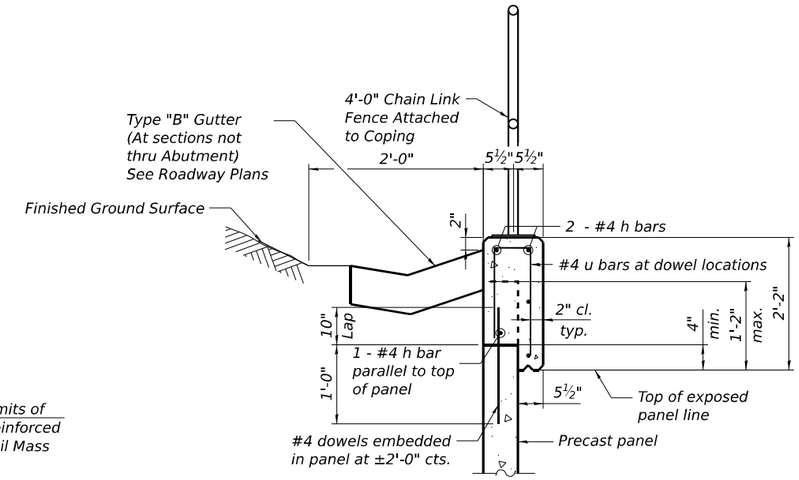

CAST IN PLACE COPING FOR MSE WALL PANELS

BILL OF MATERIAL - WB

Item	Unit	Quantity
Removal and Disposal of Unsuitable Material for Structures	Cu Yd	315
Mechanically Stabilized Earth Retaining Wall	Sq Ft	1,170
Chain Link Fence, 4' Attached to Structure	Foot	10
Rock Fill	Cu Yd	3,987

BILL OF MATERIAL - EB

Item	Unit	Quantity
Removal and Disposal of Unsuitable Material for Structures	Cu Yd	4,278
Mechanically Stabilized Earth Retaining Wall	Sq Ft	2,867
Chain Link Fence, 4' Attached to Structure	Foot	70
Rock Fill	Cu Yd	5,302

NOTES:

1. Bottom of abutment cap shall be poured against the top of plywood cap. Cut opening to match pile cap perimeter within ⅛". Support with bars tack welded to webs rated for 500 lbs. Seal gaps to keep concrete out.
2. The M.S.E. wall supplier shall design the abutment soil reinforcement to resist a horizontal forces of 7.62 kips/ft. of abutment.
3. Reinforcing for Cast in Place Coping shown for information only, cost included with Mechanically Stabilized Earth Retaining Wall.

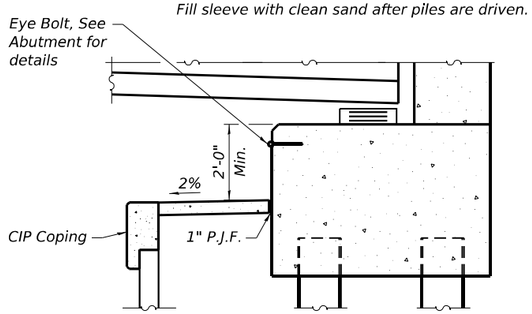

DETAIL 1

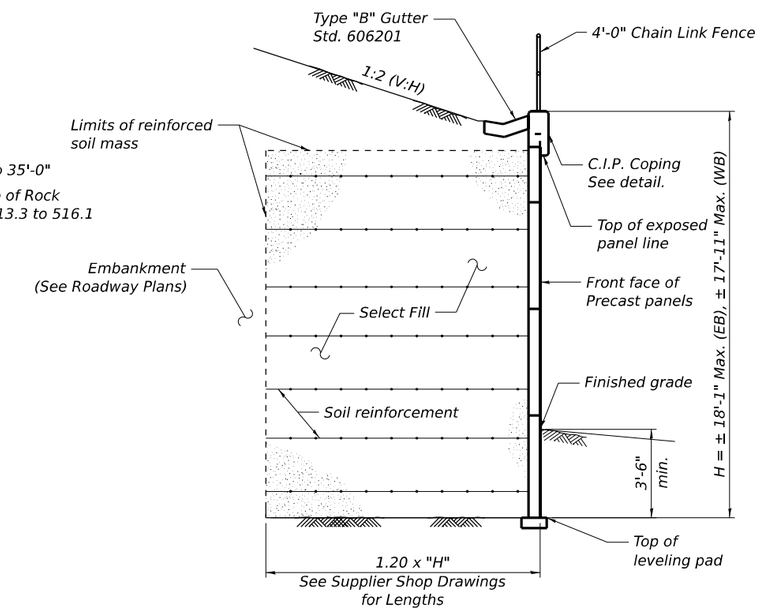

SECTION THRU MSE WALL

(Horiz. dim. @ ∠'s)

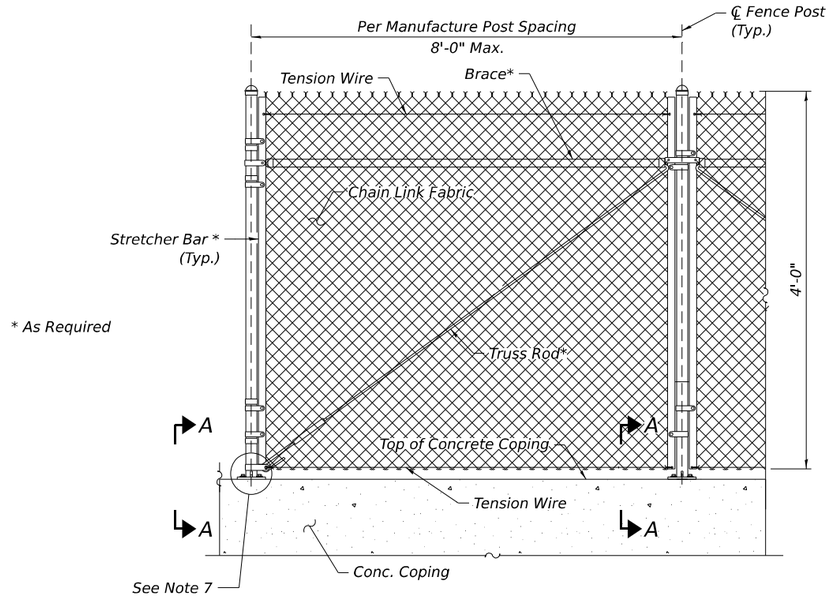

CHAIN LINK FENCE ELEVATION

(Along top of Concrete Coping)

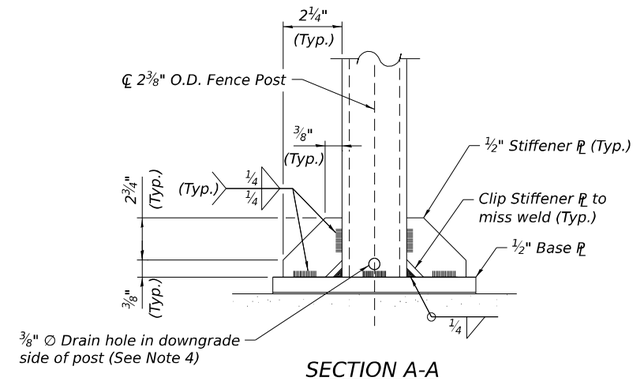

SECTION A-A

(Fence Post base plate connection)

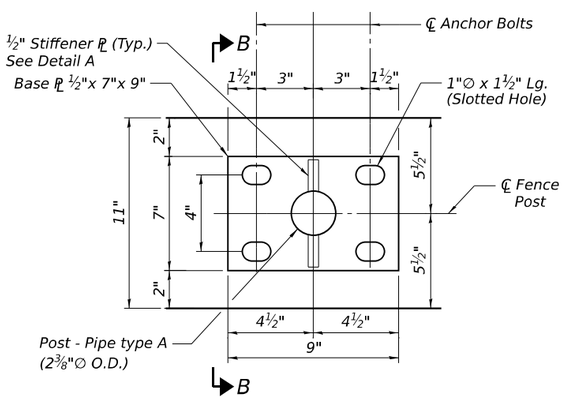

Base PL

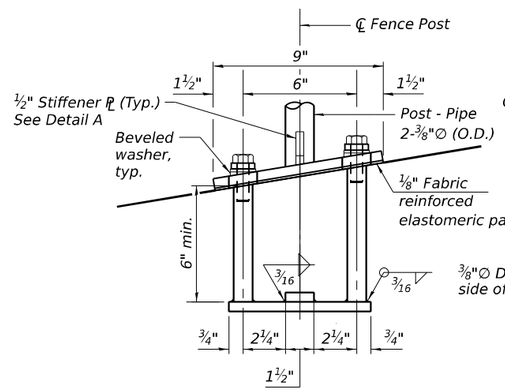

Detail A

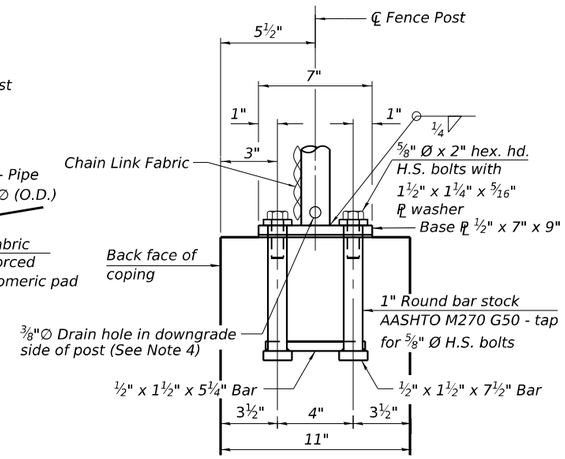

SECTION B-B

(Stiffener not shown for clarity)

NOTES:

1. See Highway Standard 664001-02 for additional fence details.
2. Fence shall be continuous over concrete coping expansion joints.
3. At all fence locations, the end posts shall be 7" from the the coping expansion joint and ends.
4. Drill Drain hole to miss fillet weld and prior to galvanizing. Hole shall be drilled as close to the weld as possible.
5. Edge distance from a construction or expansion joint in the proposed copings to an expansion anchor shall be per manufacturer's specifications.
6. For CIP Concrete coping detail see sheets S-311 and S-313.
7. Place reinforcement bars to miss anchor rod locations.
8. All heavy hex nuts shall be according to ASTM A 563 Grade DH.
9. All fully threaded anchor rods shall be ASTM F1554 Grade 105.
10. The post base plate shall be fastened to the top of the cast in place coping snug tight and given an additional ⅛" turn.

BASE PLATE NOTES:

A. Base Plates shall be fabricated from material meeting the requirements of AASHTO M270 Grade 50.

B. Base Plates and Posts shall be Hot Dipped Galvanized after fabrication in accordance with AASHTO M111.

C. All fabrication shall be per Article 505.04 of the Standard Specifications.

D. All bolts, nuts, washers and anchors shall be galvanized according to AASHTO M 232.

ANCHORAGE ASSEMBLY

In lieu of the cast-in-place anchor device shown, the Contractor has the option of drilling and setting ⅝" Ø fully threaded anchor rods with the same plate washers as specified above and heavy hex lock nuts according to Article 509.06 of the Standard Specifications. Embedment shall be according to the manufacturer's specifications.

BILL OF MATERIAL

Item	Unit	Quantity
Chain Link Fence, 4' Attached to Structure	Foot	186

WSP USA Inc.
30 N. LASALLE STREET
SUITE 4200
CHICAGO, IL 60602
TEL: (312) 782-8150
FAX: (312) 782-1684

USER NAME = USSJ696614	DESIGNED - SJJ	REVISED -	
	CHECKED - PJL	REVISED -	
PLOT SCALE = 0:2 ':' / in.	DRAWN - SJJ	REVISED -	
PLOT DATE = 11/5/2025	CHECKED - PJL	REVISED -	

STATE OF ILLINOIS
DEPARTMENT OF TRANSPORTATION

CHAIN LINK FENCE DETAILS
STRUCTURE NUMBER 099-8309 WB AND 099-8325 EB

SHEET S-314 OF S-333 SHEETS

F.A.I RTE.	SECTION	COUNTY	TOTAL SHEETS	SHEET NO.
I-80	FAI 80 21 STRUCTURE 2	WILL	1230	895
		CONTRACT NO. 62R23		
		ILLINOIS	FED. AID PROJECT	

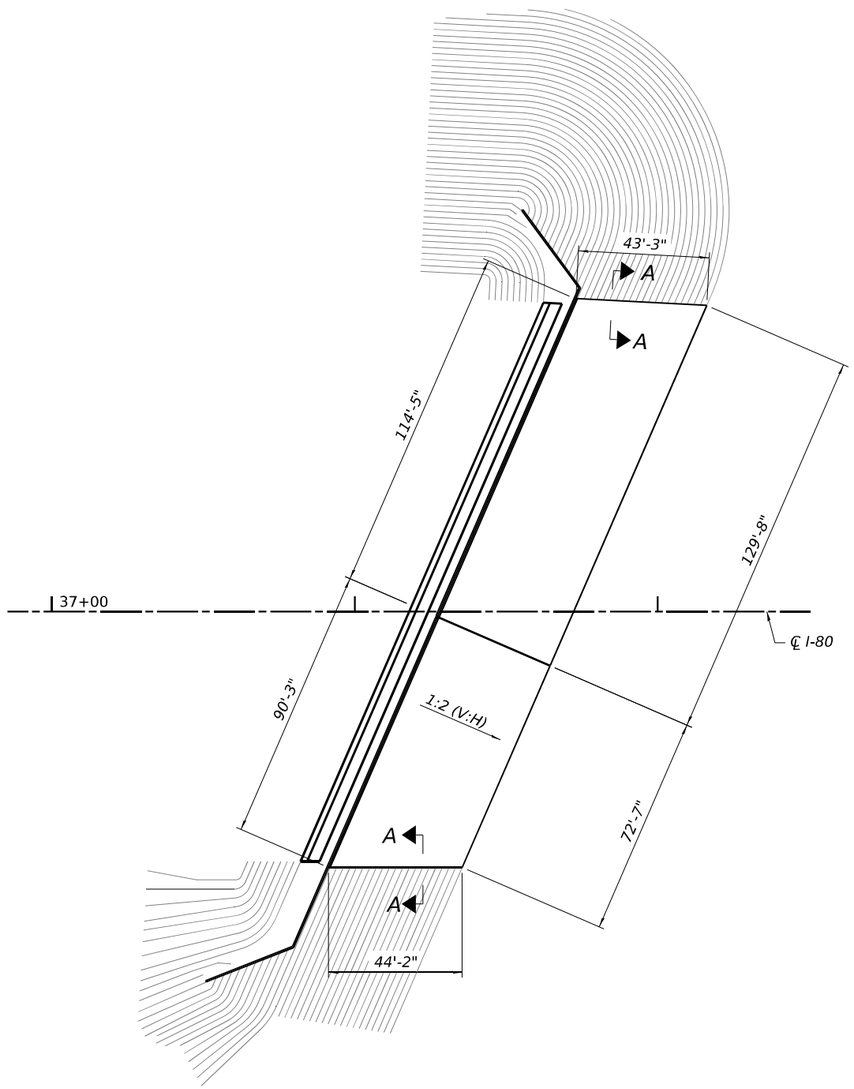

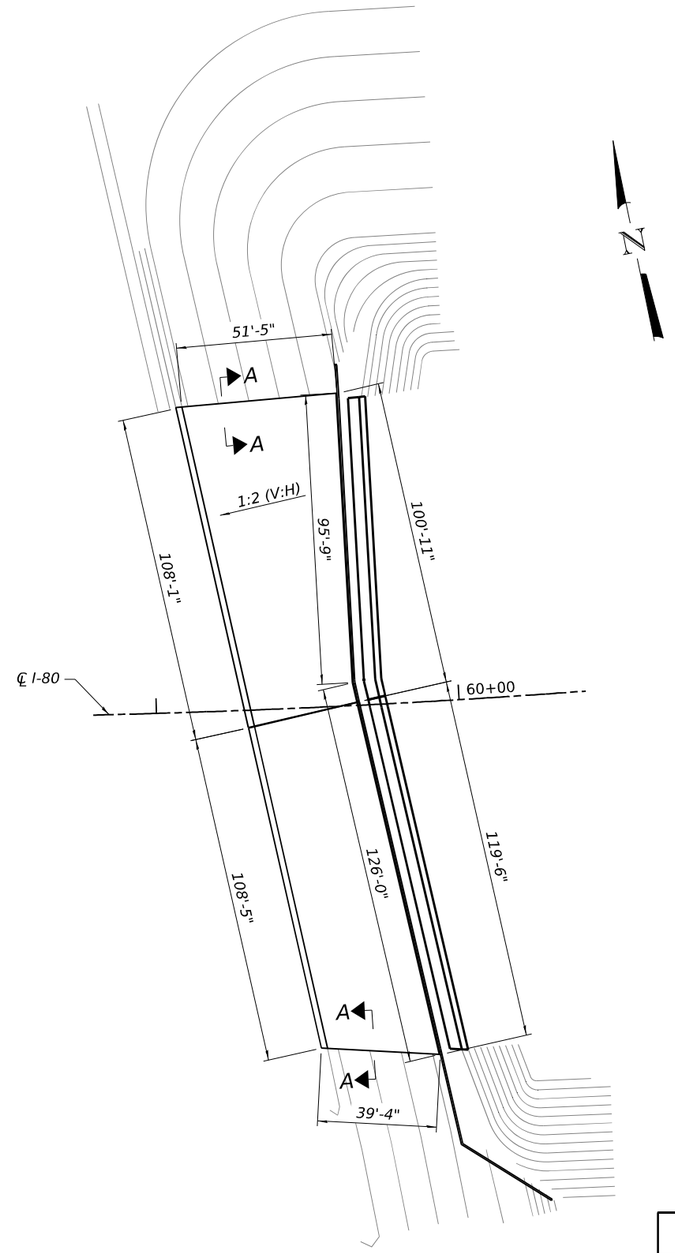

NOTES:

1. Slope wall shall be reinforced with welded wire fabric, 6in. x 6 in. - W4.0 x W4.0, weighing 58 lbs. per 100 sq. ft.
2. See Roadway Plans for additional grading details.
3. See sheet S-9 for Sections thru Concrete Slope Wall and Section A-A.

BILL OF MATERIAL - WB

ITEM	UNIT	TOTAL
Slope Wall 4 Inch	Sq. Yd.	1,071

BILL OF MATERIAL - EB

ITEM	UNIT	TOTAL
Slope Wall 4 Inch	Sq. Yd.	840

MODEL: Default
FILE NAME: pw://transystems-pw.bentley.com:transyscorp-pw1-hosted/Documents/Projects_2018/CH401/401180022/03-WSP/CAD/62R23-RB-1/Sheets/Structural/0998309-62R23-S901-SLP01.dgn

WSP USA Inc.
30 N. LASALLE STREET
SUITE 4200
CHICAGO, IL 60602
TEL: (312) 782-8150
FAX: (312) 782-1684

USER NAME = USSJ696614	DESIGNED - SJJ	REVISED -
	CHECKED - PJL	REVISED -
PLOT SCALE = 50:0 ':" / in.	DRAWN - SJJ	REVISED -
PLOT DATE = 11/5/2025	CHECKED - PJL	REVISED -

STATE OF ILLINOIS
DEPARTMENT OF TRANSPORTATION

SLOPE WALL
STRUCTURE NUMBER 099-8309 WB AND 099-8325 EB

SHEET S-315 OF S-333 SHEETS

F.A.I RTE.	SECTION	COUNTY	TOTAL SHEETS	SHEET NO.
I-80	FAI 80 21 STRUCTURE 2	WILL	1230	896
		CONTRACT NO. 62R23		
	ILLINOIS	FED. AID PROJECT		

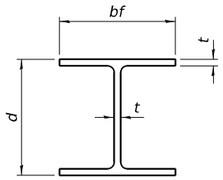

STEEL PILE TABLE

Designation	Depth d	Flange width bf	Web and Flange thickness t	Encasement diameter A
HP 18x181	18	18	1	36"
x157	17¾"	17⅞"	⅞"	36"
x135	17½"	17¾"	¾"	36"
HP 16x183	16½"	16½"	1⅛"	36"
x162	16¼"	16⅛"	1"	36"
x141	16	16	⅞"	36"
x121	15¾"	15⅞"	¾"	36"
HP 14x117	14¼"	14⅞"	13/16"	30"
x102	14"	14¾"	11/16"	30"
x89	13⅞"	14¾"	⅝"	30"
x73	13⅝"	14⅝"	½"	30"
HP 12x84	12¼"	12¼"	11/16"	24"
x74	12⅛"	12¼"	⅝"	24"
x63	12"	12⅛"	½"	24"
x53	11¾"	12"	7/16"	24"
HP 10x57	10"	10¼"	9/16"	24"
x42	9¾"	10⅛"	7/16"	24"
HP 8x36	8"	8⅛"	7/16"	18"

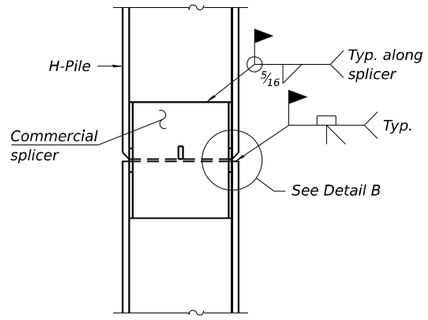

ELEVATION

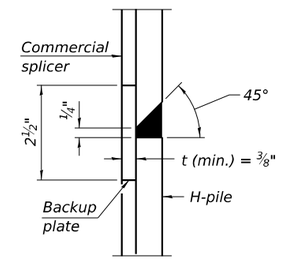

DETAIL B

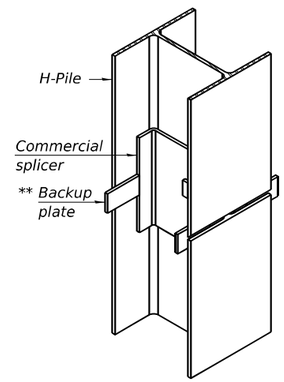

ISOMETRIC VIEW

WELDED COMMERCIAL SPLICE

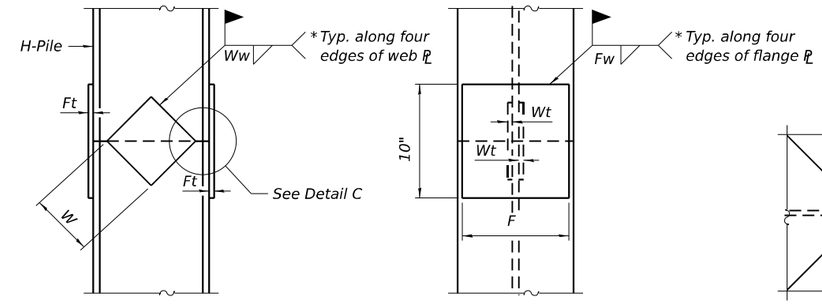

ELEVATION END VIEW DETAIL C

Designation	F	Ft	Fw	W	Wt	Ww
HP 18x181	15½"	1½"	1"	9½"	⅞"	¾"
x157	15¼"	1¼"	1"	9½"	⅞"	¾"
x135	15¼"	1¼"	1"	9½"	⅞"	¾"
HP 16x183	13¾"	1½"	1"	8¼"	⅞"	¾"
x162	13½"	1½"	1"	8¼"	¾"	⅝"
x141	13½"	1¼"	⅞"	8¼"	¾"	⅝"
x121	13½"	1¼"	⅞"	8¼"	¾"	⅝"
HP 14x117	12½"	1¼"	⅞"	7¾"	⅝"	½"
x102	12½"	1"	¾"	7¾"	⅝"	½"
x89	12½"	⅞"	11/16"	7¾"	⅝"	½"
x73	12½"	¾"	9/16"	7¾"	⅝"	½"
HP 12x84	10"	1"	11/16"	6½"	⅝"	½"
x74	10"	⅞"	11/16"	6½"	⅝"	½"
x63	10"	¾"	½"	6½"	½"	⅜"
x53	10"	¾"	½"	6½"	½"	⅜"
HP 10x57	8"	⅞"	9/16"	5¼"	½"	⅜"
x42	8"	¾"	9/16"	5¼"	½"	⅜"
HP 8x36	6¾"	⅝"	7/16"	4"	½"	⅜"

WELDED PLATE FIELD SPLICE

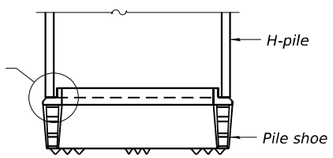

ELEVATION

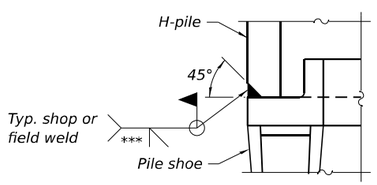

DETAIL A

SHOE ATTACHMENT

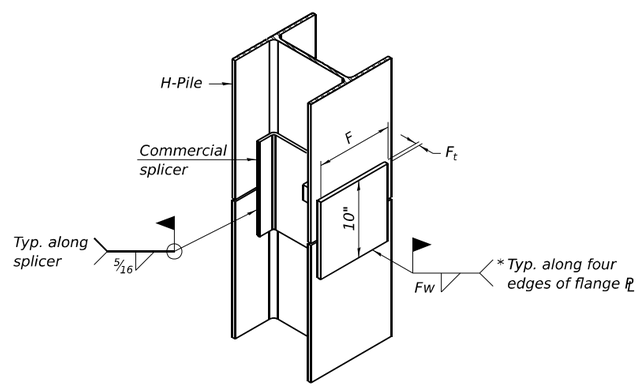

ISOMETRIC VIEW

WELDED COMMERCIAL SPLICE ALTERNATE

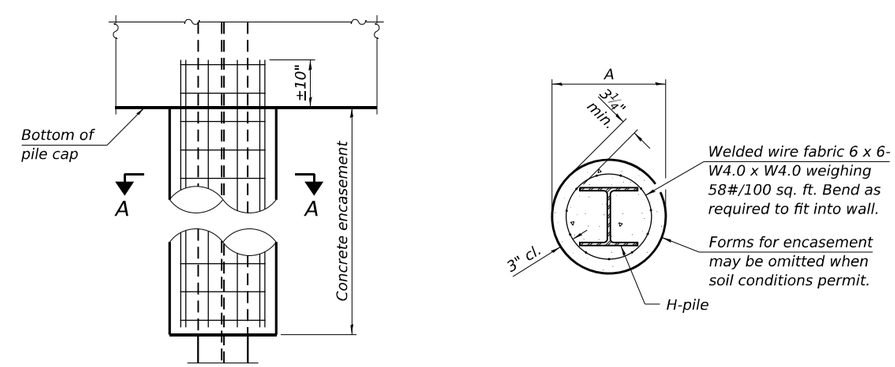

ELEVATION SECTION A-A

INDIVIDUAL PILE CONCRETE ENCASEMENT
(when specified)

Note:
The steel H-piles shall be according to AASHTO M270 Grade 50.

* Interrupt welds ¼" from end of web and/or each flange.

** Remove portions of backup plates that extend outside the flanges.

*** Weld size per pile shoe manufacturer (5/16" min.).

F-HP 10-27-2023

WSP USA Inc.
30 N. LASALLE STREET
SUITE 4200
CHICAGO, IL 60602
TEL: (312) 782-8150
FAX: (312) 782-1684

USER NAME = USSJ696614	DESIGNED - SJJ	REVISED -	
	CHECKED - PJL	REVISED -	
PLOT SCALE = 0:2 ':' / in.	DRAWN - SJJ	REVISED -	
PLOT DATE = 11/5/2025	CHECKED - PJL	REVISED -	

STATE OF ILLINOIS
DEPARTMENT OF TRANSPORTATION

HP PILE DETAILS
STRUCTURE NUMBER 099-8309 WB AND 099-8325 EB

SHEET S-316 OF S-333 SHEETS

F.A.I RTE.	SECTION	COUNTY	TOTAL SHEETS	SHEET NO.
I-80	FAI 80 21 STRUCTURE 2	WILL	1230	897
		CONTRACT NO. 62R23		
	ILLINOIS	FED. AID PROJECT		

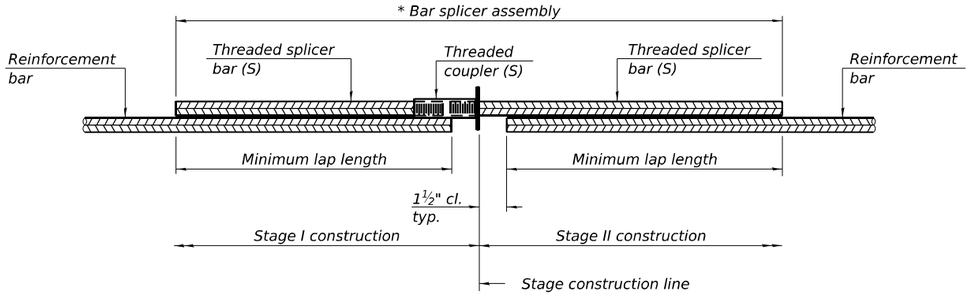

STANDARD BAR SPLICER ASSEMBLY PLAN

Only bar splicer assemblies as presented on the approved QPL list may be used.

Threaded splicer bar length = min. lap length + 1½" + thread length

* Epoxy not required on Bar Splicer Assembly components used in conjunction with black bars.

Location	Bar size	No. assemblies required	Minimum lap length
-	-	-	-

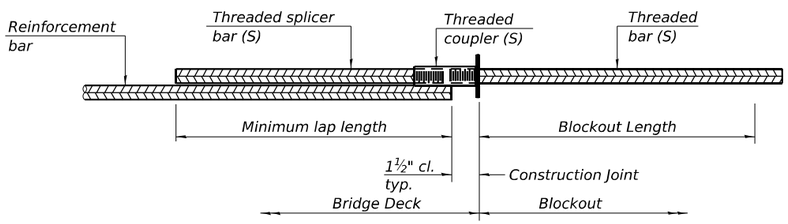

CONCRETE LEDGE BAR SPLICER ASSEMBLY PLAN

(All components shall be provided from one supplier)

Threaded splicer bar length = min. lap length + 1½" + thread length
Threaded bar length = X - 2" + 1 thread length

Location	Bar size	No. assemblies required	Minimum lap length
Pier 5 WB Blockout (Top)	#5	80	3'-8"
Pier 5 WB Blockout (Bott.)	#5	69	2'-1"
Pier 7 WB Blockout (Top)	#5	80	3'-8"
Pier 7 WB Blockout (Bott.)	#5	69	2'-1"
Pier 7 WB Blockout (Top)	#5	97	3'-8"
Pier 7 WB Blockout (Bott.)	#5	87	2'-1"
Pier 5 EB Blockout (Top)	#5	94	3'-8"
Pier 5 EB Blockout (Bott.)	#5	78	2'-1"
Pier 8 EB Blockout (Top)	#5	94	3'-8"
Pier 8 EB Blockout (Bott.)	#5	78	2'-1"
Pier 8 EB Blockout (Top)	#5	110	3'-8"
Pier 8 EB Blockout (Bott.)	#5	105	2'-1"

Note:
One bar splicer assembly includes a threaded splicer bar, threaded bar, and threaded coupler.

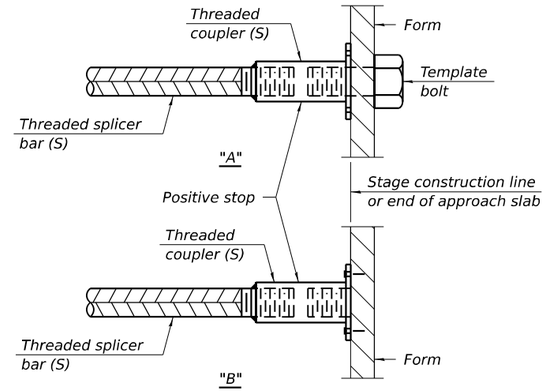

INSTALLATION AND SETTING METHODS

"A" : Set bar splicer assembly by means of a template bolt.
"B" : Set bar splicer assembly by nailing to wood forms or cementing to steel forms.
(E) : Indicates epoxy coating.

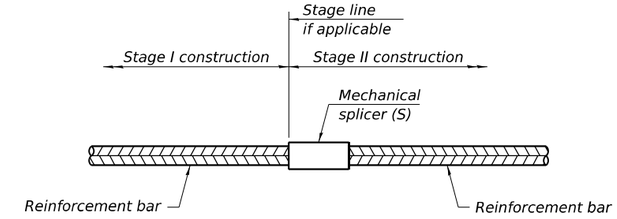

STANDARD MECHANICAL SPLICER

Location	Bar size	No. assemblies required

Notes:
Splicer bars shall be deformed with threaded ends and have a minimum 60 ksi yield strength.
All reinforcement shall be lapped and tied to the splicer bars.
Bar splicer assemblies shall be epoxy coated according to the requirements for reinforcement bars. See Section 508 of the Standard Specifications.
See approved list of bar splicer assemblies and mechanical splicers for alternatives.
Concrete Ledge Bar Splicer Assemblies shall be stainless steel.

BSD-1 5-15-2023

Illinois Department of Transportation
Division of Highways
GSG Consultants

SOIL BORING LOG

Page 1 of 2

Date 7/3/25

ROUTE I-80 DESCRIPTION I-80 EB over Des Plaines River (CSX) LOGGED BY MP

SECTION C-91-109-22 LOCATION , SEC. 16, TWP. 35 N, RNG. 10 E,

COUNTY Will DRILLING RIG Mobile B-57 Latitude , Longitude HAMMER TYPE Auto

DRILLING METHOD HSA HAMMER EFF (%) 92.1

STRUCT. NO. 099-8325
Station

BORING NO. BSB-001
Station 37+88.08
Offset 95.13ft RT
Ground Surface Elev. 578.21 ft

Surface Water Elev. N/A ft
Stream Bed Elev. N/A ft

Groundwater Elev.:
First Encounter 509.7 ft ▼
Upon Completion N/A ft
After ___ Hrs. N/A ft

Description	Elev.	DEPTH (ft)	BLOWS (/6")	UCS Qu (tsf)	MOIST (%)
18 inches of Asphalt	576.71		5		
Brown, Moist FILL: SILTY CLAY, with gravel			5 3	0.8 P	
			3		
		-5	3 2	2.3 P	
Medium Stiff to Stiff Brown and Gray, Moist SILTY CLAY, trace sand, trace gravel (CL/ML)	572.71		2		
			1 1	0.5 P	
			1		
		-10	1 2	0.6 B	
			1		
			3 4	1.7 B	
			2 4 4	1.5 B	
Stiff to Very Stiff Brown, Gray, and Black, Moist SILTY CLAY, trace sand, trace gravel (CL/ML)	562.71	-15	2		
			2 3	1.5 B	
			2		
		-20	2 2	1.0 B	
Stiff to Very Stiff Brown, Gray, and Black, Moist SILTY CLAY, trace sand, trace gravel (CL/ML) *(continued)*			0		
			2 4	1.5 B	
			2		
		-25	5 7	2.1 B	
			2		
			4 8	1.5 D	
Hard Dark Gray, Moist SILTY CLAY LOAM, some gravel (ML/CL) Cobbles at 29 to 31.5 feet	550.21		4		
		-30	50/6"	4.2 B	
Medium Stiff Dark Brown and Gray, Moist SILTY CLAY, trace sand, trace gravel (CL/ML)	547.71		20		
			13 8	0.8 B	
Gray, Moist WEATHERED LIMESTONE Auger refusal at 33.5 feet	545.21 544.71	-35			
Gray LIMESTONE, slightly moderately weathered, moderately to heavily fractured, trace clay at 34.5', trace chert Run 1: 33.5' - 38.5' Recovery: 90.7% RQD: 45.8% (Poor)	539.71	-40			

The Unconfined Compressive Strength (UCS) Failure Mode is indicated by (B-Bulge, S-Shear, P-Penetrometer)
The SPT (N value) is the sum of the last two blow values in each sampling zone (AASHTO T206)

BBS, form 137 (Rev. 8-99)

Illinois Department of Transportation
Division of Highways
GSG Consultants

SOIL BORING LOG

Page 2 of 2

Date 7/3/25

ROUTE I-80 DESCRIPTION I-80 EB over Des Plaines River (CSX) LOGGED BY MP

SECTION C-91-109-22 LOCATION , SEC. 16, TWP. 35 N, RNG. 10 E,

COUNTY Will DRILLING RIG Mobile B-57 Latitude , Longitude HAMMER TYPE Auto

DRILLING METHOD HSA HAMMER EFF (%) 92.1

STRUCT. NO. 099-8325
Station

BORING NO. BSB-001
Station 37+88.08
Offset 95.13ft RT
Ground Surface Elev. 578.21 ft

Surface Water Elev. N/A ft
Stream Bed Elev. N/A ft

Groundwater Elev.:
First Encounter 509.7 ft ▼
Upon Completion N/A ft
After ___ Hrs. N/A ft

Description	Elev.	DEPTH (ft)	BLOWS (/6")	UCS Qu (tsf)	MOIST (%)
Gray LIMESTONE, slightly weathered, slightly to moderately fractured, trace chert Run 2: 38.5' - 48.5' Recovery: 99.4% RQD: 90.2% (Good) *(continued)*		-45			
End of Boring	529.71	-50			
		-55			
		-60			

The Unconfined Compressive Strength (UCS) Failure Mode is indicated by (B-Bulge, S-Shear, P-Penetrometer)
The SPT (N value) is the sum of the last two blow values in each sampling zone (AASHTO T206)

BBS, form 137 (Rev. 8-99)

Illinois Department of Transportation
Division of Highways
GSG Consultants

SOIL BORING LOG

Page 1 of 1

Date 4/29/25

ROUTE I-80 DESCRIPTION I-80 EB over Des Plaines River (CSX) LOGGED BY EH

SECTION C-91-109-22 LOCATION , SEC. 16, TWP. 35 N, RNG. 10 E,

COUNTY Will DRILLING RIG CME-75 Latitude , Longitude HAMMER TYPE Auto

DRILLING METHOD HSA HAMMER EFF (%) 78.8

STRUCT. NO. 099-8325
Station

BORING NO. BSB-002
Station 38+43.37
Offset 1.19ft LT
Ground Surface Elev. 548.00 ft

Surface Water Elev. N/A ft
Stream Bed Elev. N/A ft

Groundwater Elev.:
First Encounter Dry ft
Upon Completion N/A ft
After ___ Hrs. N/A ft

Description	Elev.	DEPTH (ft)	BLOWS (/6")	UCS Qu (tsf)	MOIST (%)
3 inches of Topsoil	547.75				
Stiff Dark Brown and Gray, Very Moist SILTY CLAY, trace sand, trace gravel (CL/ML)	546.50		3		
			5 5	1.0 P	42
Loose Brown, Wet SAND, with gravel (SP)	545.00				
Medium Stiff Brown, Dry SILTY CLAY, some sand, some gravel (CL/ML)			6		
		-5	3 4	0.8 P	4
Very Dense Brown, Moist SAND, with gravel (SP)	542.50 541.00		50/4"		
Auger refusal at 7 feet End of Boring		-10			
		-15			
		-20			

The Unconfined Compressive Strength (UCS) Failure Mode is indicated by (B-Bulge, S-Shear, P-Penetrometer)
The SPT (N value) is the sum of the last two blow values in each sampling zone (AASHTO T206)

BBS, form 137 (Rev. 8-99)

MODEL: Default
FILE NAME: pw://transystems-pw.bentley.com:transyscorp-pw1-hosted/Documents/Projects_2018/CH401/401180022/03-WSP/CAD/62R23-R8-1/Sheets/Structural/0998309-62R23-S904-SB01.dgn

WSP USA Inc.
30 N. LASALLE STREET
SUITE 4200
CHICAGO, IL 60602
TEL: (312) 782-8150
FAX: (312) 782-1684

USER NAME = USSJ696614	DESIGNED - GM	REVISED -	
	CHECKED - PJL	REVISED -	
PLOT SCALE = 0:2 ':' / in.	DRAWN - GM	REVISED -	
PLOT DATE = 11/5/2025	CHECKED - PJL	REVISED -	

STATE OF ILLINOIS
DEPARTMENT OF TRANSPORTATION

BORING LOGS 1
STRUCTURE NUMBER 099-8309 WB AND 099-8325 EB

SHEET S-318 OF S-333 SHEETS

F.A.I RTE.	SECTION	COUNTY	TOTAL SHEETS	SHEET NO.
I-80	FAI 80 21 STRUCTURE 2	WILL	1230	899
		CONTRACT NO. 62R23		
	ILLINOIS	FED. AID PROJECT		

Illinois Department of Transportation
Division of Highways
GSG Consultants

SOIL BORING LOG

Page 1 of 1

Date 4/29/25

ROUTE I-80 DESCRIPTION I-80 WB over Des Plaines River (CSX) LOGGED BY DV

SECTION C-91-109-22 LOCATION , SEC. 16, TWP. 35 N, RNG. 10 E,
Latitude , Longitude

COUNTY Will DRILLING RIG Mobile B-57 HAMMER TYPE Auto
DRILLING METHOD HSA HAMMER EFF (%) 92.1

STRUCT. NO. 099-8309
Station

BORING NO. BSB-003
Station 38+71.43
Offset 75.28ft LT
Ground Surface Elev. 548.48 ft

Surface Water Elev. N/A ft
Stream Bed Elev. N/A ft

Groundwater Elev.:
First Encounter Dry ft
Upon Completion N/A ft
After ___ Hrs. N/A ft

Description	Elev.	DEPTH (ft)	BLOWS (/6")	UCS Qu (tsf)	MOIST (%)
Brown, Moist FILL: SAND, with gravel			3 6 7		7
	545.48				
Very Dense Brown, Moist GRAVEL, with sand (GP)			10 8 50/2"		8
Auger refusal at 5 feet	543.48	-5			
Brown and Gray LIMESTONE, slightly weathered, moderately fractured Run 1: 5' - 15' Recovery: 88.8% RQD: 55.6% (Fair)		-10			
	533.48	-15			
Gray LIMESTONE, slightly weathered, slightly fractured, trace shale Run 2: 15' - 20' Recovery: 100% RQD: 92.5% (Excellent)					
	528.48	-20			

End of Boring

The Unconfined Compressive Strength (UCS) Failure Mode is indicated by (B-Bulge, S-Shear, P-Penetrometer)
The SPT (N value) is the sum of the last two blow values in each sampling zone (AASHTO T206)

BBS, form 137 (Rev. 8-99)

Illinois Department of Transportation
Division of Highways
GSG Consultants, Inc.

SOIL BORING LOG

Page 1 of 1

Date 10/20/22

ROUTE I-80 DESCRIPTION I-80 EB over Des Plaines River (CSX) LOGGED BY AA

SECTION C-91-109-22 LOCATION , SEC. 16, TWP. 35 N, RNG. 10 E,
Latitude 41.51254634, Longitude -88.09380484

COUNTY Will DRILLING RIG Diedrich D-50 HAMMER TYPE Auto
DRILLING METHOD HSA HAMMER EFF (%) 95.5

STRUCT. NO. 099-8325
Station

BORING NO. BSB-04
Station 39+81.30
Offset 77.89ft RT
Ground Surface Elev. 540.36 ft

Surface Water Elev. N/A ft
Stream Bed Elev. N/A ft

Groundwater Elev.:
First Encounter Dry ft
Upon Completion N/A ft
After ___ Hrs. N/A ft

Description	Elev.	DEPTH (ft)	BLOWS (/6")	UCS Qu (tsf)	MOIST (%)
4 inches of Asphalt 8 inches of Aggregate Subbase	540.03 539.36				
Black, Moist FILL: SILTY CLAY, trace gravel	538.36		5 8	1.5	12
Brown, Moist FILL: SAND, with gravel			24	P	
	536.86				
Gray, Moist HIGHLY WEATHERED LIMESTONE	530.30		50/0"		
Auger refusal at 4 feet End of Boring		-5			
		-10			
		-15			
		-20			

The Unconfined Compressive Strength (UCS) Failure Mode is indicated by (B-Bulge, S-Shear, P-Penetrometer)
The SPT (N value) is the sum of the last two blow values in each sampling zone (AASHTO T206)

BBS, form 137 (Rev. 8-99)

Illinois Department of Transportation
Division of Highways
GSG Consultants, Inc.

SOIL BORING LOG

Page 1 of 1

Date 10/20/22

ROUTE I-80 DESCRIPTION I-80 EB over Des Plaines River (CSX) LOGGED BY EH

SECTION C-91-109-22 LOCATION , SEC. 16, TWP. 35 N, RNG. 10 E,
Latitude 41.5127292, Longitude -88.09342765

COUNTY Will DRILLING RIG Diedrich D-50 HAMMER TYPE Auto
DRILLING METHOD HSA HAMMER EFF (%) 99.5

STRUCT. NO. 099-8325
Station

BORING NO. BSB-05
Station 40+15.20
Offset 2.76ft RT
Ground Surface Elev. 541.00 ft

Surface Water Elev. N/A ft
Stream Bed Elev. N/A ft

Groundwater Elev.:
First Encounter Dry ft
Upon Completion N/A ft
After ___ Hrs. N/A ft

Description	Elev.	DEPTH (ft)	BLOWS (/6")	UCS Qu (tsf)	MOIST (%)
5 inches of Asphalt 7 inches of Concrete	540.58 540.00				
Dark Gray, Moist FILL: SILTY CLAY, with gravel, trace organics			8 10 8	1.5 P	23
	537.50				
Very Dense Light Gray, Dry SAND, with gravel (SPG)			50/4"		5
Auger refusal at 5 feet	536.00	-5			
Light Gray LIMESTONE, moderately weathered, moderately fractured, some vugs Run 1: 5' - 15' Recovery: 91.7% RQD: 70.8% (Fair)		-10			
	526.00	-15			
Light Gray LIMESTONE, moderately weathered, slightly fractured, some vugs Run 2: 15' - 22' Recovery: 100% RQD: 92.5% (Excellent)		-20			
	519.00				
End of Boring		-25			
		-30			
		-35			
		-40			

The Unconfined Compressive Strength (UCS) Failure Mode is indicated by (B-Bulge, S-Shear, P-Penetrometer)
The SPT (N value) is the sum of the last two blow values in each sampling zone (AASHTO T206)

BBS, form 137 (Rev. 8-99)

MODEL: Default
FILE NAME: pw://transystems-pw.bentley.com:transyscorp-pw1-hosted/Documents/Projects_2018/CH401/401180022/03-WSP/CAD/62R23-RB-1/Sheets/Structural/0998309-62R23-S905-SB02.dgn

WSP USA Inc.
30 N. LASALLE STREET
SUITE 4200
CHICAGO, IL 60602
TEL: (312) 782-8150
FAX: (312) 782-1684

USER NAME = USSJ696614	DESIGNED - GM	REVISED -	
	CHECKED - PJL	REVISED -	
PLOT SCALE = 0:2 ':" / in.	DRAWN - GM	REVISED -	
PLOT DATE = 11/5/2025	CHECKED - PJL	REVISED -	

STATE OF ILLINOIS
DEPARTMENT OF TRANSPORTATION

BORING LOGS 2
STRUCTURE NUMBER 099-8309 WB AND 099-8325 EB

SHEET S-319 OF S-333 SHEETS

F.A.I RTE.	SECTION	COUNTY	TOTAL SHEETS	SHEET NO.
I-80	FAI 80 21 STRUCTURE 2	WILL	1230	900
		CONTRACT NO. 62R23		
	ILLINOIS	FED. AID PROJECT		