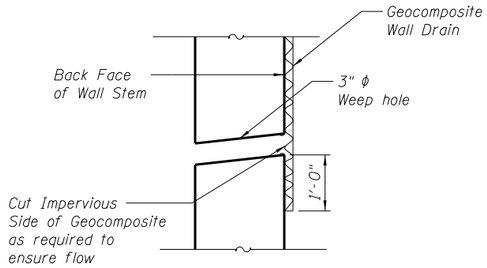

WEEP HOLE DRAIN DETAIL

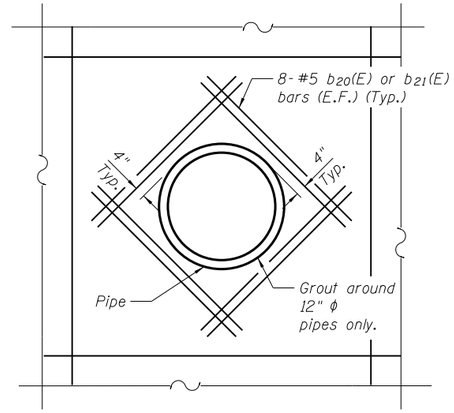

TYPICAL SECTION AROUND PIPES

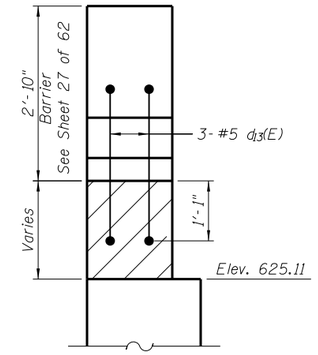

BARRIER ON SE CORNER OF HEADER

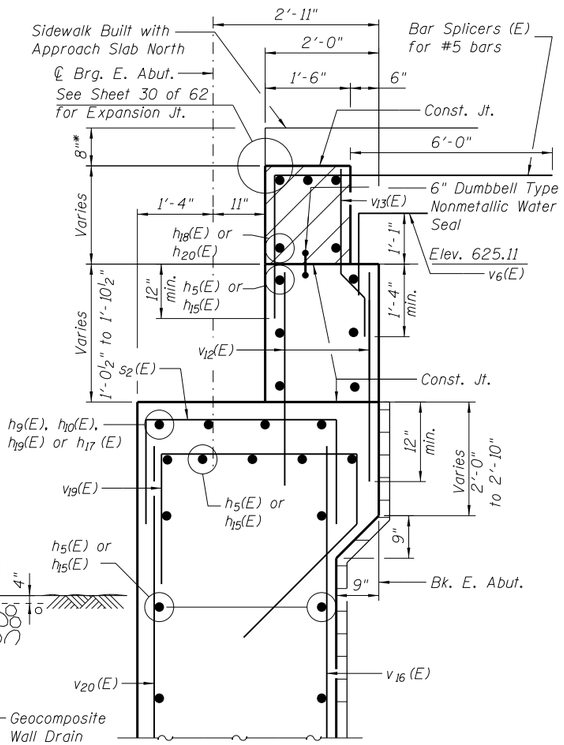

BEAM SEAT SECTION

(NTS)

* At North edge of E. Abut. only.

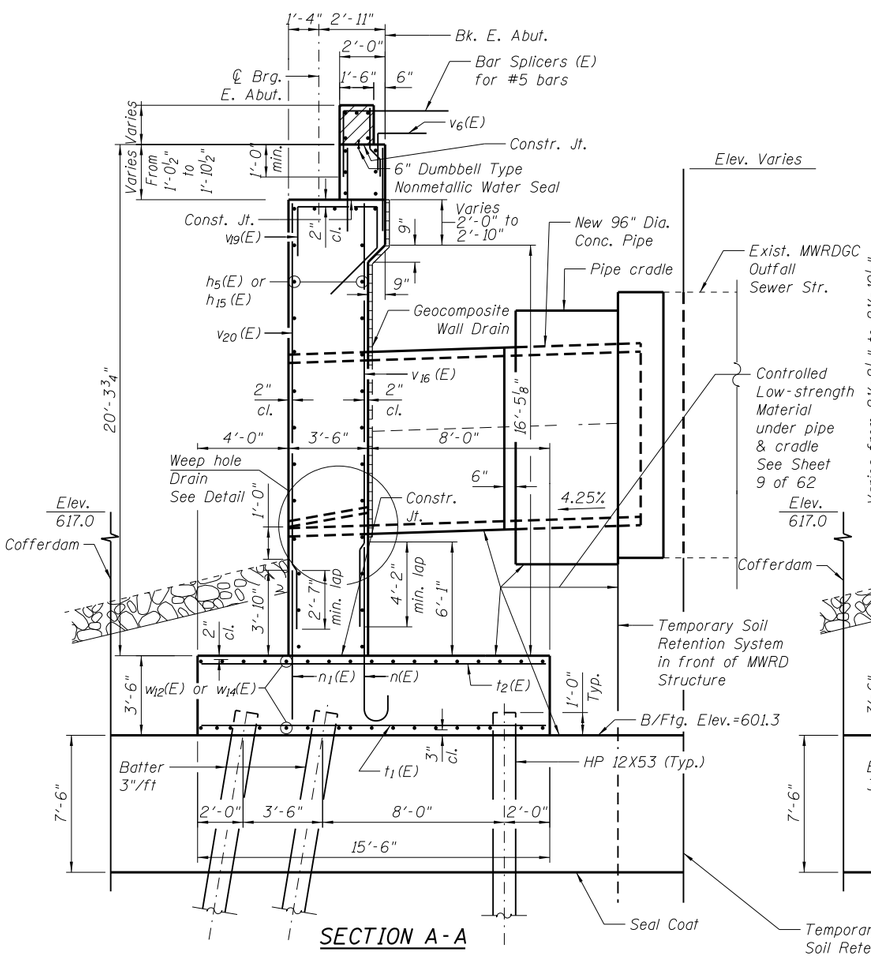

SECTION A-A

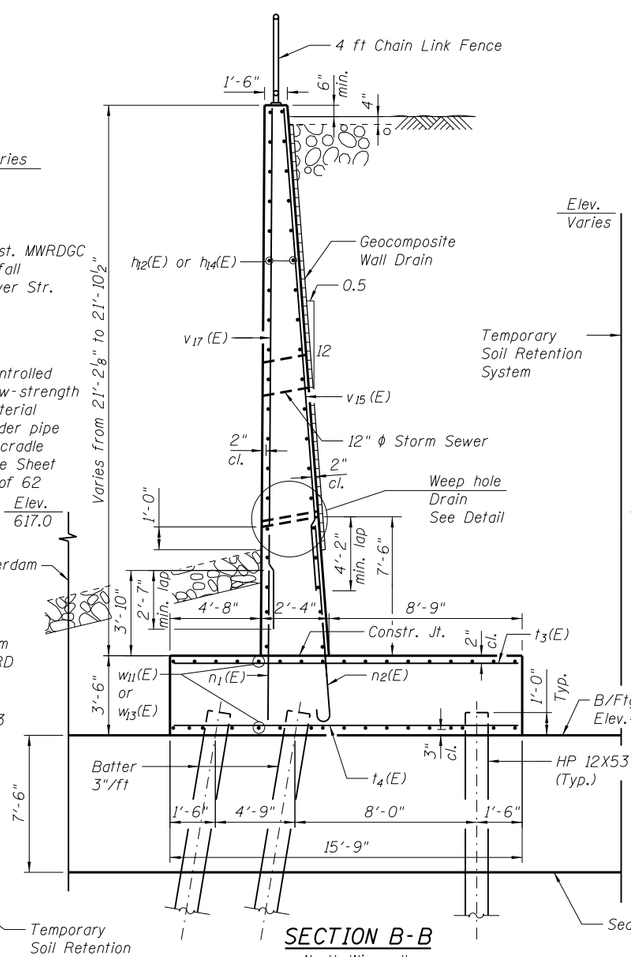

SECTION B-B

North Wingwall

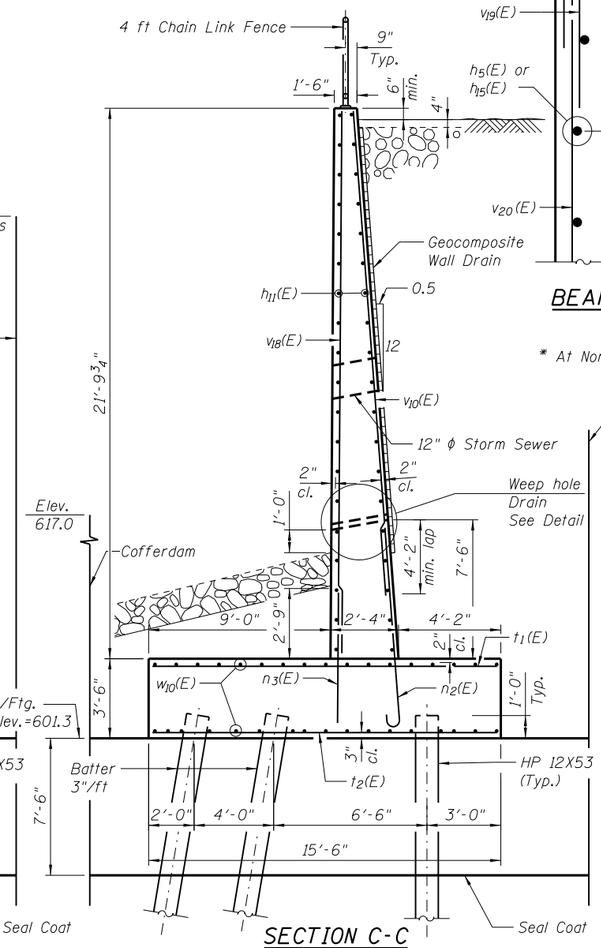

SECTION C-C

South Wingwall

See Sheet 45 of 62 for 90° End Wall (Section F-F)

Notes:

Additional bars in steps not shown in Section A-A.

Reinf. bars at pipe openings shall be adjusted or cut as approved by the Engineer.

Abutment wall stem shall be cast against 96" MWRD pipe.

12" ϕ Pipe connections to the Wingwalls shall be made by providing a formed circular void 2" larger than the outside diameter of the pipe. After forms are removed, the annular space shall be filled with grout. Mastic joint sealer shall be applied to the backface of the connection. Walls shall not be cast against the 12" ϕ pipe. Cost included with Concrete Structures.

E.F. denotes Each Face.

Hatched area to be poured after superstructure false work has been removed. Quantity of concrete included with Concrete Superstructures.

Work sheets 40 thru 45 of 62 together.

See Sheet 9 of 62 for pipe cradle details.

FILE NAME = W:\191-130.1007_IL64\CADD_Sheets\structural\D160J11-sht-35_E AbutDet 1.dgn

Bollinger, Lach & Associates, Inc.
ITASCA, ILLINOIS

USER NAME =	DESIGNED - JMT	REVISED
	CHECKED - JJI	REVISED
PLOT SCALE =	DRAWN - GM	REVISED
PLOT DATE = 8/16/2013	CHECKED - JJI	REVISED

STATE OF ILLINOIS
DEPARTMENT OF TRANSPORTATION

EAST ABUTMET DETAILS I
STRUCTURE NO. 016-3035

SHEET NO. 44 OF 62 SHEETS

F.A.P. RTE.	SECTION	COUNTY	TOTAL SHEETS	SHEET NO.
307	541Y-3-B	COOK	143	105
		CONTRACT NO. 60J11		
		ILLINOIS FED. AID PROJECT		