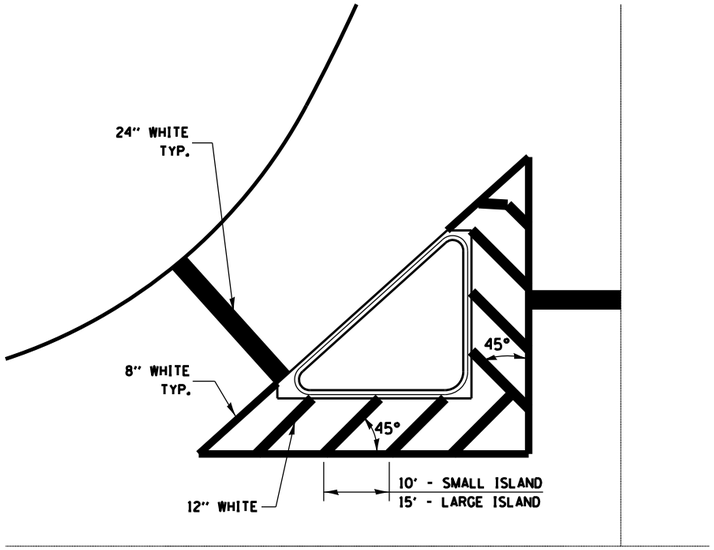

TYPICAL ISLAND

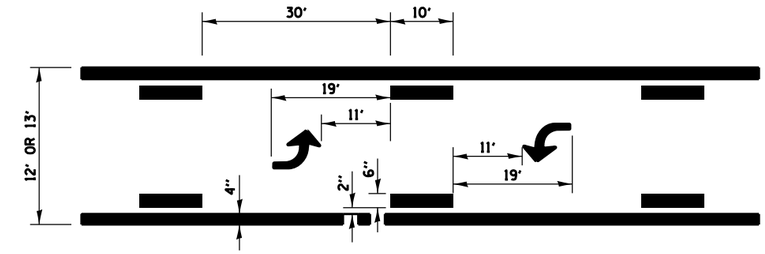

TYPICAL APPLICATION
BI-DIRECTIONAL TURN LANE

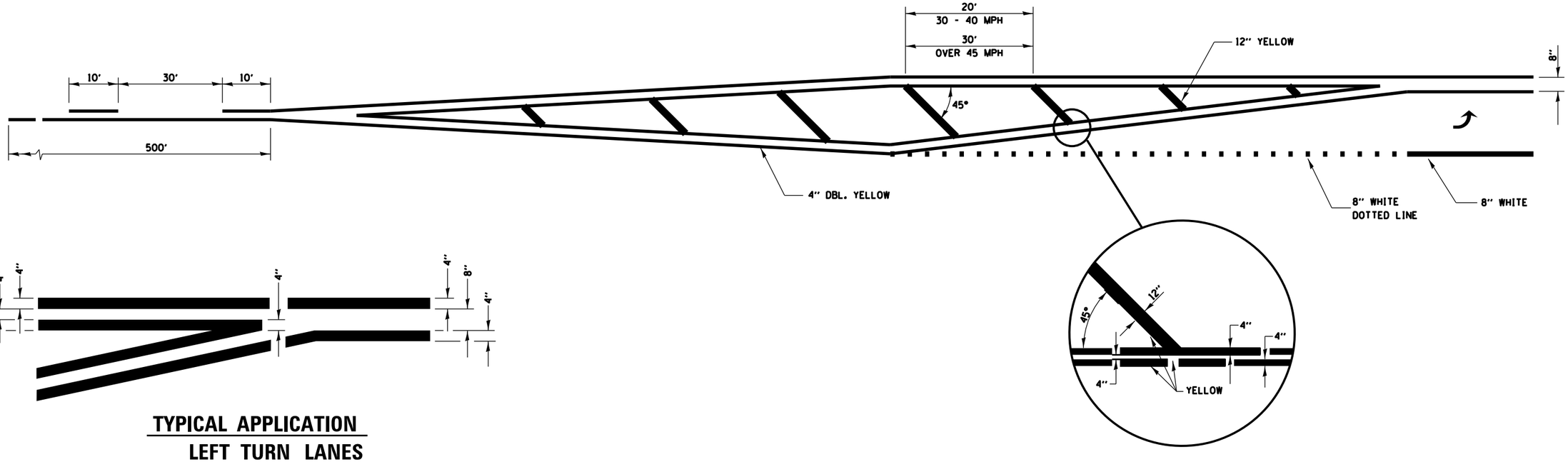

TYPICAL APPLICATION
LEFT TURN LANES

FILE NAME = $FILEL$	USER NAME = $USER$	DESIGNED - ___	REVISED - ___	STATE OF ILLINOIS DEPARTMENT OF TRANSPORTATION	DETAILS	F.A.P RTE.	SECTION	COUNTY	TOTAL SHEETS / SHEET NO.
		DRAWN - ___	REVISED - ___			697	(17) RS-4	FORD	31 / 23
	PLOT SCALE = $SCALE$	CHECKED - ___	REVISED - ___					CONTRACT NO. 66A94	
Default	PLOT DATE = $DATE$	DATE - ___	REVISED - ___		SCALE: ___ SHEET ___ OF ___ SHEETS STA. ___ TO STA. ___		ILLINOIS FED. AID PROJECT		