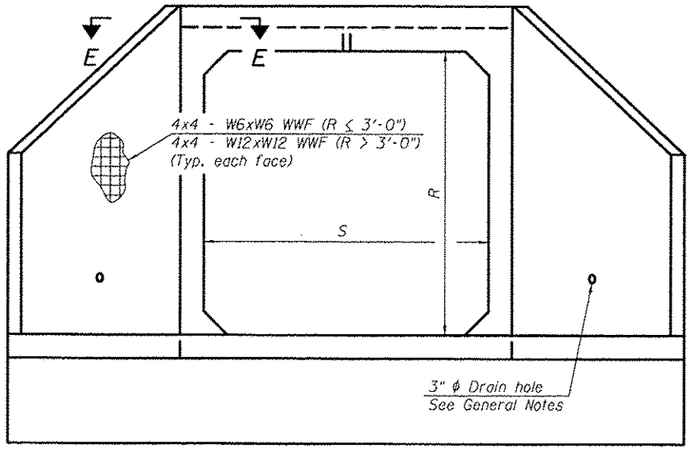


## END VIEW

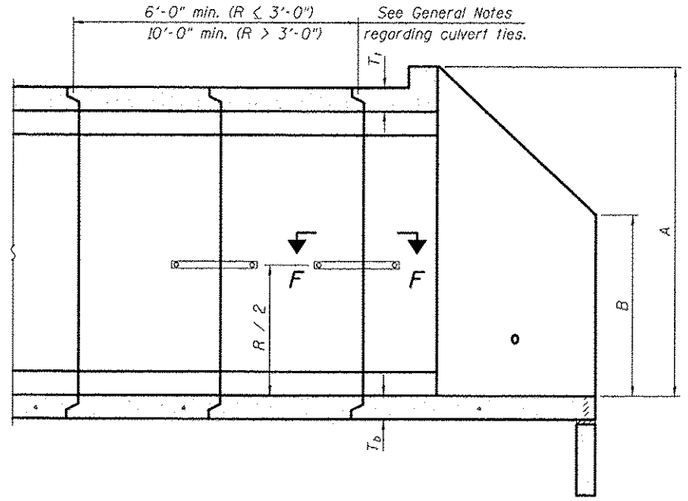


## SECTION A-A

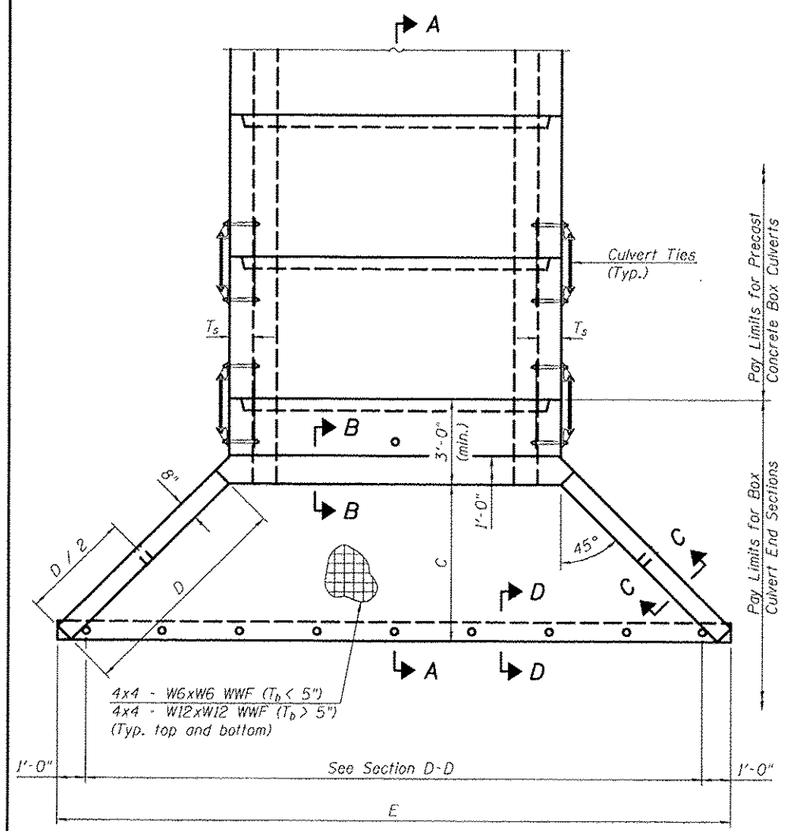


## PLAN

## GENERAL NOTES

Box Culvert End Sections shall be constructed according to the requirements of Section 540 of the Standard Specifications except as modified herein. End sections will be paid for at the contract unit price per each for Box Culvert End Sections.

The Contractor may furnish the end section as a single precast concrete piece or construct the end section in the field using cast-in-place (CIP) construction. For CIP construction, the bottom slab thickness shall be increased by 2" and the clear cover to the bottom mat of reinforcement shall be increased to 3".

Box section dimensions, materials, and reinforcement details for Box Culvert End Sections shall be according to the requirements for ASTM C 1577 as required for the design of the portion of the culvert within the limits of Precast Concrete Box Culverts except as modified herein.

The number of culvert ties shall be sufficient to engage the minimum length of culvert barrel shown within the pay limits for Precast Concrete Box Culverts and will be dependent upon the length of box culvert segments furnished by the Contractor. Culvert ties are not required for box culverts having a rise (R) less than or equal to 3 ft and a span (S) greater than or equal to 10 ft.

All costs associated with furnishing and installing or constructing the toewall and culvert ties will not be measured for payment but shall be included in the unit price for Box Culvert End Sections of the culvert number specified.

Shop drawings that detail slab thickness and reinforcement layout for the Box Culvert End Sections shall be provided to the Engineer for review and approval. Reinforcement bars not detailed herein shall be detailed with a clear distance at the end of the reinforcement not less than ½" nor more than 2". For the precast option, it shall be the Contractor's responsibility for determining a method of handling and a construction procedure shall be included on the shop drawings. The Contractor shall determine and detail in the shop drawings any necessary strengthening or stiffening provisions necessary to handle the precast segment. Any required modifications shall be at no extra charge.

The Contractor may use reinforcement bars in lieu of welded wire fabric (WWF). Reinforcement bars shall be limited to the sizes of #3 through #5 bars, a maximum spacing of the lesser of 8" or the member thickness, and shall result in area of reinforcement equal to or greater than that provided by the WWF. Minimum lap lengths detailed herein are applicable to WWF and reinforcement bars.

Reinforcement (circumferential and longitudinal) in the culvert barrel portion of the end section being lapped with reinforcement from the wingwalls or bottom slab of the end section shall not be less than that required by ASTM C 1577 for the design fill height or the reinforcement detailed for the end section, whichever is greater.

Reinforcement bars shall conform to the requirements of ASTM A 706 Gr 60.

Reinforcement bars designated (E) shall be epoxy coated.

Bonded construction joints shall be prepared according to Article 503.09 of the Standard Specifications.

One drain hole shall be provided in each wingwall for end sections of box culverts having an opening with a clear rise greater than 3 ft. The drain hole shall be located within the lower 1/3 of the clear rise of the box culvert and shall conform to the requirements of Article 503.11 of the Standard Specifications.

## APRON END SECTION DIMENSIONS

| Span (S) | Rise (R) | $T_t$ | $T_b$ | $T_s$ | A | B | C | D | E | Concrete Cu. Yd. | Culvert Ties Required |
|---|---|---|---|---|---|---|---|---|---|---|---|
| 3'-0" | 2'-0" | 7" | 6" | 4" | 3'-4" | 2'-2" | 2'-10 5/8" | 4'-1" | 10'-4 5/8" | 2.8 | Yes |
| 3'-0" | 2'-0" | 4" | 4" | 4" | 3'-1" | 2'-1" | 2'-7 7/8" | 3'-9" | 9'-11" | 2.3 | Yes |
| 3'-0" | 3'-0" | 7" | 6" | 4" | 4'-4" | 2'-8" | 3'-10 5/8" | 5'-6" | 12-4 5/8" | 3.7 | Yes |
| 3'-0" | 3'-0" | 4" | 4" | 4" | 4'-1" | 2'-7" | 3'-7 7/8" | 5'-2" | 11'-11" | 3.1 | Yes |
| 4'-0" | 2'-0" | 7.5" | 6" | 5" | 3'-4½" | 2'-2½" | 2'-11 3/8" | 4'-2" | 11'-8" | 3.3 | Yes |
| 4'-0" | 2'-0" | 5" | 5" | 5" | 3'-2" | 2'-1" | 2'-8½" | 3'-10" | 11'-2 3/8" | 2.8 | Yes |
| 4'-0" | 3'-0" | 7.5" | 6" | 5" | 4'-4½" | 2'-8½" | 3'-11 3/8" | 5'-7" | 13'-8⅛" | 4.2 | Yes |
| 4'-0" | 3'-0" | 5" | 5" | 5" | 4'-2" | 2'-7" | 3'-8½" | 5'-3" | 13'-2 3/8" | 3.7 | Yes |
| 4'-0" | 4'-0" | 7.5" | 6" | 5" | 5'-4½" | 3'-2½" | 4'-11 3/8" | 7'-0" | 15'-8⅛" | 5.3 | Yes |
| 4'-0" | 4'-0" | 5" | 5" | 5" | 5'-2" | 3'-1" | 4'-8 5/8" | 6'-8" | 15'-2½" | 4.7 | Yes |
| 5'-0" | 2'-0" | 8" | 7" | 6" | 3'-5" | 2'-3" | 2'-11 3/8" | 4'-2" | 12'-10" | 3.9 | Yes |
| 5'-0" | 2'-0" | 6" | 6" | 6" | 3'-3" | 2'-2" | 2'-10" | 4'-0" | 12'-7¼" | 3.5 | Yes |
| 5'-0" | 3'-0" | 8" | 7" | 6" | 4'-5" | 2'-9" | 3'-11 3/8 | 5'-7" | 14'-10⅛" | 4.9 | Yes |
| 5'-0" | 3'-0" | 6" | 6" | 6" | 4'-3" | 2'-8" | 3'-10" | 5'-5" | 14'-7¼" | 4.5 | Yes |
| 5'-0" | 4'-0" | 8" | 7" | 6" | 5'-5" | 3'-3" | 4'-11 3/8" | 7'-0" | 16'-10⅛" | 6.1 | Yes |
| 5'-0" | 4'-0" | 6" | 6" | 6" | 5'-3" | 3'-2" | 4'-9¼" | 6'-9" | 16'-5 7/8" | 5.5 | Yes |
| 5'-0" | 5'-0" | 8" | 7" | 6" | 6'-5" | 3'-9" | 5'-11 3/8" | 8'-5" | 18'-10⅛" | 7.4 | Yes |
| 5'-0" | 5'-0" | 6" | 6" | 6" | 6'-3" | 3'-8" | 5'-9¼" | 8'-2" | 18'-5 7/8" | 6.8 | Yes |
| 6'-0" | 2'-0" | 8" | 7" | 7" | 3'-5" | 2'-3" | 2'-11 3/8" | 4'-2" | 14'-0" | 4.3 | Yes |
| 6'-0" | 2'-0" | 7" | 7" | 7" | 3'-4" | 2'-2" | 2'-10 5/8" | 4'-1" | 13'-10 5/8" | 4.2 | Yes |
| 6'-0" | 3'-0" | 8" | 7" | 7" | 4'-5" | 2'-9" | 3'-11 3/8" | 5'-7" | 16'-0⅛" | 5.4 | Yes |
| 6'-0" | 3'-0" | 7" | 7" | 7" | 4'-4" | 2'-8" | 3'-10 5/8" | 5'-6" | 15'-10 5/8" | 5.2 | Yes |
| 6'-0" | 4'-0" | 8" | 7" | 7" | 5'-5" | 3'-3" | 4'-11 3/8" | 7'-0" | 18'-0⅛" | 6.5 | Yes |
| 6'-0" | 4'-0" | 7" | 7" | 7" | 5'-4" | 3'-2" | 4'-10¾" | 6'-11" | 17'-10¾" | 6.5 | Yes |
| 6'-0" | 5'-0" | 8" | 7" | 7" | 6'-5" | 3'-9" | 5'-11 3/8" | 8'-5" | 20'-0⅛" | 8.0 | Yes |
| 6'-0" | 5'-0" | 7" | 7" | 7" | 6'-4" | 3'-8" | 5'-10¾" | 8'-4" | 19'-10¾" | 7.8 | Yes |
| 6'-0" | 6'-0" | 8" | 7" | 7" | 7'-5" | 4'-3" | 6'-11½" | 9'-10" | 22'-0¼" | 9.5 | Yes |
| 6'-0" | 6'-0" | 7" | 7" | 7" | 7'-4" | 4'-2" | 6'-10¾" | 9'-9" | 21'-10¾" | 9.3 | Yes |
| 7'-0" | 4'-0" | 8" | 8" | 8" | 5'-5" | 3'-3" | 4'-11 3/8" | 7'-0" | 19'-2⅛" | 7.4 | Yes |
| 7'-0" | 5'-0" | 8" | 8" | 8" | 6'-5" | 3'-9" | 5'-11 3/8" | 8'-5" | 21'-2⅛" | 8.9 | Yes |
| 7'-0" | 6'-0" | 8" | 8" | 8" | 7'-5" | 4'-3" | 6'-11½" | 9'-10" | 23'-2¼" | 10.6 | Yes |
| 8'-0" | 2'-0" | 8" | 8" | 8" | 3'-5" | 2'-3" | 2'-11 3/8" | 4'-2" | 16'-2" | 5.3 | Yes |
| 8'-0" | 3'-0" | 8" | 8" | 8" | 4'-5" | 2'-9" | 3'-11 3/8" | 5'-7" | 18'-2⅛" | 6.5 | Yes |
| 8'-0" | 4'-0" | 8" | 8" | 8" | 5'-5" | 3'-3" | 4'-11 3/8" | 7'-0" | 20'-2⅛" | 7.8 | Yes |
| 8'-0" | 5'-0" | 8" | 8" | 8" | 6'-5" | 3'-9" | 5'-11 3/8" | 8'-5" | 22'-2⅛" | 9.3 | Yes |
| 8'-0" | 6'-0" | 8" | 8" | 8" | 7'-5" | 4'-3" | 6'-11½" | 9'-10" | 24'-2¼" | 11.0 | Yes |
| 9'-0" | 5'-0" | 9" | 9" | 9" | 6'-6" | 3'-9" | 6'-0 7/8" | 8'-7" | 23'-7" | 10.6 | Yes |
| 9'-0" | 6'-0" | 9" | 9" | 9" | 7'-6" | 4'-3" | 7'-0⅛" | 9'-11" | 25'-5 5/8" | 12.4 | Yes |
| 10'-0" | 2'-0" | 10" | 10" | 10" | 3'-7" | 2'-4" | 3'-1½" | 4'-5" | 18'-10¼" | 7.1 | No |
| 10'-0" | 3'-0" | 10" | 10" | 10" | 4'-7" | 2'-10" | 4'-1½" | 5'-10" | 20'-10¼" | 8.6 | No |
| 10'-0" | 5'-0" | 10" | 10" | 10" | 6'-7" | 3'-10" | 6'-1½" | 8'-8" | 24'-10 3/8" | 12.0 | Yes |
| 10'-0" | 6'-0" | 10" | 10" | 10" | 7'-7" | 4'-4" | 7'-1½" | 10'-1" | 26'-10 3/8" | 13.9 | Yes |
| 11'-0" | 4'-0" | 11" | 11" | 11" | 5'-8" | 3'-4" | 5'-2¼" | 7'-4" | 24'-1¾" | 11.5 | Yes |
| 11'-0" | 6'-0" | 11" | 11" | 11" | 7'-8" | 4'-4" | 7'-2¼" | 10'-2" | 28'-1 7/8" | 15.5 | Yes |
| 12'-0" | 2'-0" | 12" | 12" | 12" | 3'-9" | 2'-5" | 3'-3 5/8" | 4'-8" | 21'-6½" | 9.3 | No |
| 12'-0" | 3'-0" | 12" | 12" | 12" | 4'-9" | 2'-11" | 4'-3 5/8" | 6'-1" | 23'-6½" | 11.1 | No |
| 12'-0" | 4'-0" | 12" | 12" | 12" | 5'-9" | 3'-5" | 5'-3 5/8" | 7'-6" | 25'-6 5/8" | 13.0 | Yes |
| 12'-0" | 6'-0" | 12" | 12" | 12" | 7'-9" | 4'-5" | 7'-3 5/8" | 10'-4" | 29'-6 5/8" | 17.4 | Yes |

Note:

Two sets of apron end section dimensions are shown above for some box culvert sizes due to the top and bottom slabs having different thicknesses per ASTM C 1577 for design fill heights less than 2 ft.