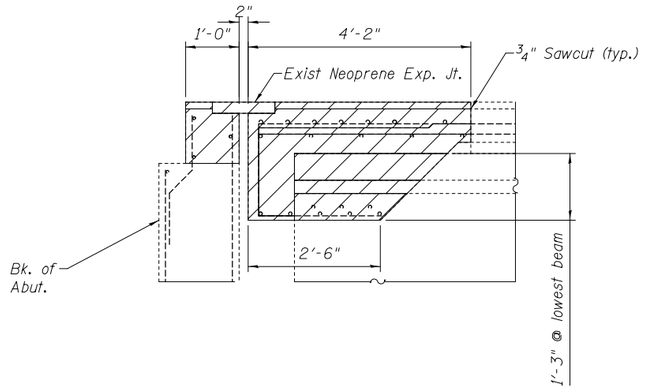

SECTION A-A

All dimensions are at right angles to jt.

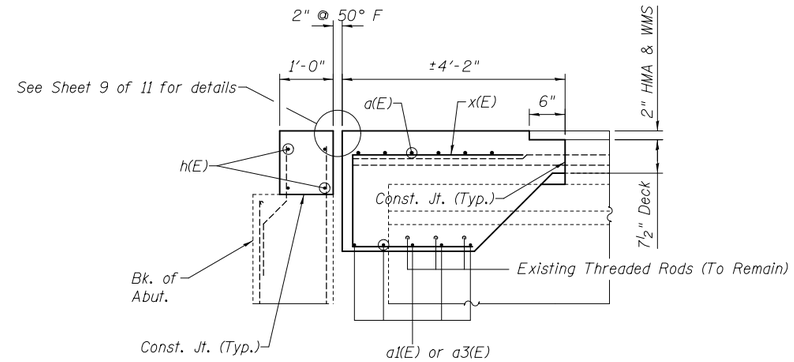

SECTION B-B

All dimensions are at right angles to jt.

Bar x(E) to be placed parallel to ℄ of Beam

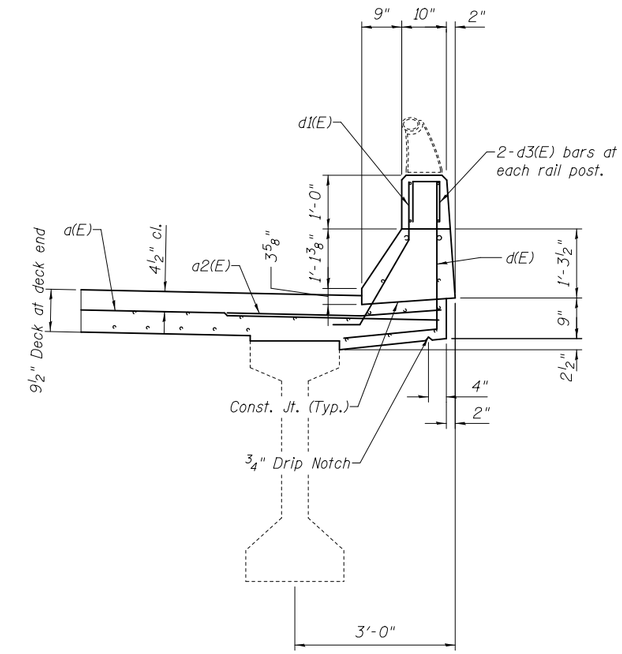

PARAPET SECTION

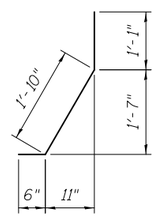

BAR d1(E)

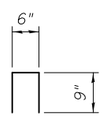

BAR d3(E)

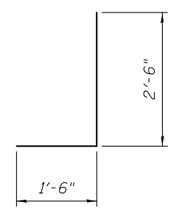

BAR d2(E)

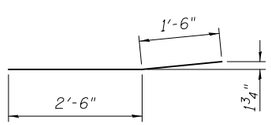

BAR a2(E)

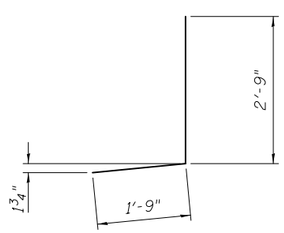

BAR d(E)

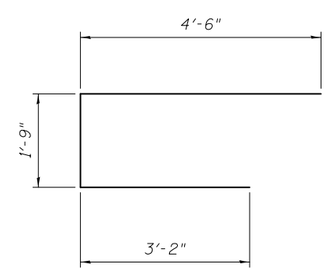

BAR x(E)

BILL OF MATERIAL

Bar	No.	Size	Length	Shape
a(E)	24	#7	32'-0"	
a1(E)	40	#6	10'-3"	
a2(E)	16	#6	4'-0"	
a3(E)	20	#6	5'-0"	
d(E)	24	#4	4'-6"	
d1(E)	8	#5	3'-5"	
d2(E)	16	#5	4'-0"	
d3(E)	8	#4	2'-0"	
h(E)	16	#6	30'-9"	
x(E)	150	#6	9'-5"	
Concrete Removal			Cu. Yd.	43.1
Concrete Superstructure			Cu. Yd.	43.9
Reinforcement Bars, Epoxy Coated			Lbs.	5470

Reinforcement bars designated (E) shall be epoxy coated.

DESIGNED - A.Y.V.	EXAMINED	DATE -	STATE OF ILLINOIS DEPARTMENT OF TRANSPORTATION
CHECKED -	ENGINEER OF STRUCTURAL SERVICES		
DRAWN - A.Y.V.	PASSED	REVISED	
CHECKED -	ENGINEER OF BRIDGES AND STRUCTURES	REVISED	

JOINT DETAILS
SN 042-0018
SHEET NO. 6 OF 11 SHEETS

F.A.P. RTE.	SECTION	COUNTY	TOTAL SHEETS	SHEET NO.
325	113BR, 113BR-1	Jersey	33	19

CONTRACT NO. 76G44

ILLINOIS FED. AID PROJECT