TYPICAL SECTIONS

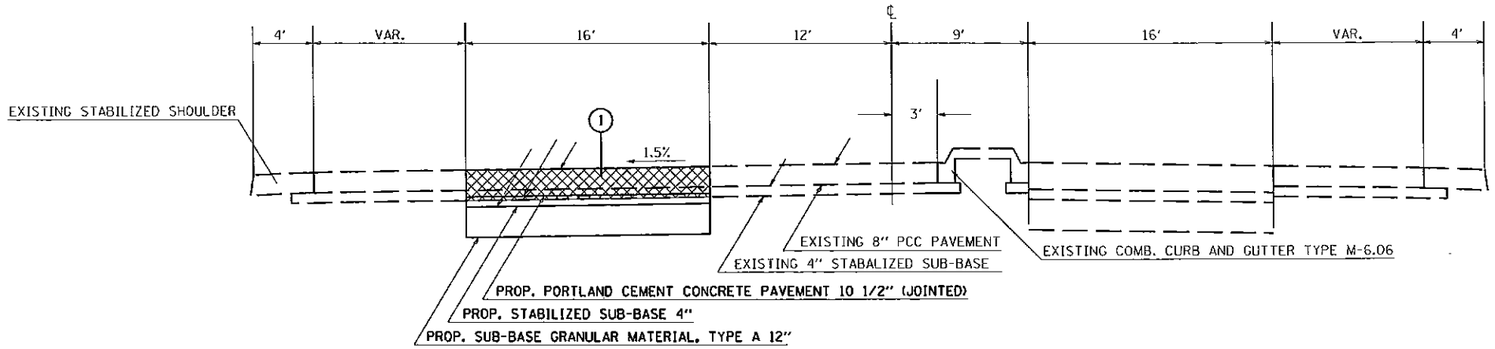

TO BE USED:
STA 1819+22.83 TO STA 1820+01.68

(1) - PROP. PAVEMENT REMOVAL

(2) - PROP. PAVED SHOULDER REMOVAL

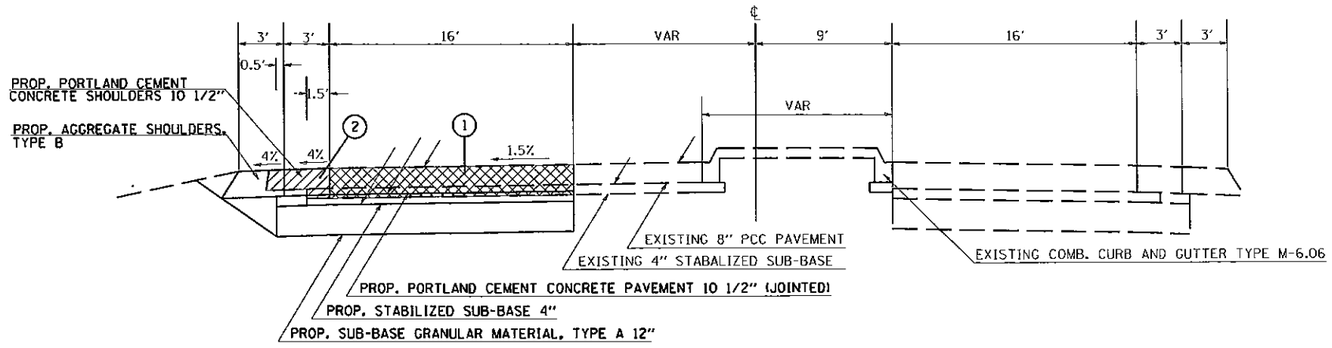

TO BE USED:
STA 1820+01.68 TO STA 1827+00

FILE NAME = c:\pw_work\pwidot\greenlaesm\d0356227\I13_1-wb-sht-pln.dgn	USER NAME = greenlaesm	DESIGNED -	REVISED -	STATE OF ILLINOIS DEPARTMENT OF TRANSPORTATION	TYPICAL SECTIONS	F.A.P. RTE.	SECTION	COUNTY	TOTAL SHEETS	SHEET NO.
	13_1-wb-sht-pln.dgn	DRAWN -	REVISED -			331	09 CM PAVEMENT REPAIR 2014-1	GALLATIN	8	6
	PLOT SCALE = 10.0000 ' / in.	CHECKED -	REVISED -					CONTRACT NO. 78386		
	PLOT DATE = 11/19/2013	DATE -	REVISED -		SCALE: SHEET OF SHEETS STA. TO STA.		ILLINOIS FED. AID PROJECT			