ROUTE NO.	SECTION	COUNTY	TOTAL SHEETS	SHEET NO.
F.A.I. 80/94	2626.2-R-2	LAKE COUNTY, INDIANA	452	262
		ILLINOIS FED. AID PROJECT-		

SHEET NO. S-30
72 SHEETS

CONTRACT NO. 62113 INDOT DES. NO. 0100987

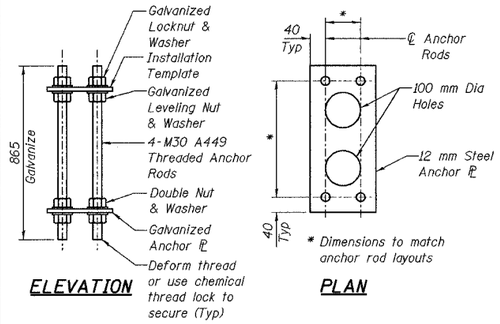

ELEVATION

PLAN

NOISE ABATEMENT WALL ANCHOR ROD ASSEMBLY

(Phase 2, Stage 2 - 50 Req'd)
(Phase 3, Stage 3 - 56 Req'd)

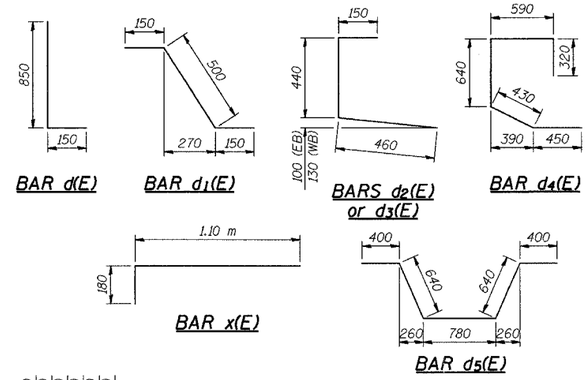

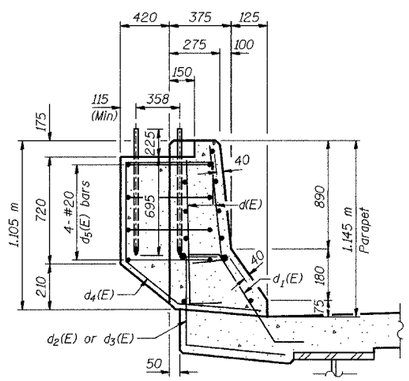

NOISEWALL PILASTER DETAIL

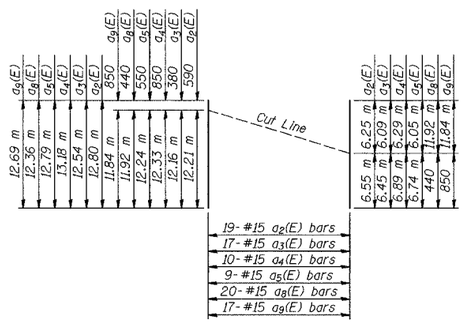

FIELD CUTTING DIAGRAM

Bars $a_2(E)$, $a_3(E)$, $a_4(E)$, $a_5(E)$, $a_8(E)$ and $a_9(E)$.

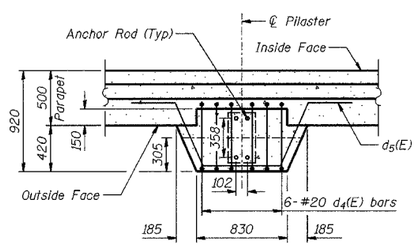

TYPICAL PILASTER SUPPORT - PLAN VIEW

(Reinforcement in Parapet not shown)
(1 Noise Abatement Wall Anchor Rod Assembly per Pilaster)
(Phase 2 - 50 Pilasters Req'd, Phase 3 - 56 Pilasters Req'd)

DESIGNED	BHS
CHECKED	KFA
DRAWN	MJB
CHECKED	GSP

SUPERSTRUCTURE BILL OF MATERIAL

PHASE 2

Bar	No.	Size	Length (m)	Shape
d(E)	718	#15	12.94	—
$a_1(E)$	633	#15	12.77	—
$a_2(E)$	19	#15	12.80	—
$a_3(E)$	17	#15	12.54	—
$a_4(E)$	10	#15	13.18	—
$a_5(E)$	9	#15	12.79	—
$a_6(E)$	2	#15	15.59	—
$a_7(E)$	6	#15	13.34	—
$a_8(E)$	20	#15	12.36	—
$a_9(E)$	17	#15	12.69	—
$a_{10}(E)$	363	#20	1.40	—
b(E)	552	#15	8.82	—
$b_1(E)$	44	#20	17.23	—
$b_2(E)$	44	#20	17.91	—
$b_3(E)$	468	#15	8.20	—
$b_4(E)$	414	#15	8.59	—
$b_5(E)$	44	#20	13.59	—
$b_6(E)$	44	#20	12.59	—
$b_7(E)$	360	#15	7.80	—
d(E)	1218	#15	1.00	L
$d_1(E)$	609	#15	0.80	⌇
$d_2(E)$	609	#15	1.05	⊏
$d_4(E)$	294	#20	2.43	⊏
$d_5(E)$	196	#20	2.86	∿
e(E)	35	#15	5.02	—
$e_1(E)$	18	#15	4.63	—
$e_2(E)$	35	#15	5.60	—
$e_3(E)$	18	#15	4.65	—
$e_4(E)$	28	#15	5.29	—
$e_5(E)$	6	#25	9.39	—
$e_6(E)$	4	#25	4.63	—
$e_7(E)$	8	#25	8.10	—
$e_8(E)$	4	#25	4.65	—
$e_9(E)$	6	#25	8.04	—
$e_{10}(E)$	6	#15	8.93	—
$e_{11}(E)$	14	#15	7.59	—
$e_{12}(E)$	28	#15	4.99	—
$e_{13}(E)$	18	#15	3.49	—
$e_{14}(E)$	35	#15	5.18	—
$e_{15}(E)$	18	#15	3.21	—
$e_{16}(E)$	21	#15	5.56	—
$e_{17}(E)$	6	#25	7.64	—
$e_{18}(E)$	4	#25	3.49	—
$e_{19}(E)$	6	#25	7.88	—
$e_{20}(E)$	4	#25	3.21	—
$e_{21}(E)$	4	#25	9.10	—
$e_{22}(E)$	6	#15	7.19	—
$e_{23}(E)$	6	#15	7.43	—
$e_{24}(E)$	4	#15	8.76	—
$e_{50}(E)$	48	#15	2.67	—
x(E)	43	#15	1.28	⌐
Concrete, C, Superstructure		m^3	554.7	
Surface Seal (Estimated)		m^2	2,379	
Reinforcing Bars, Epoxy Coated		kg	71,290	
Threaded Tie Bar Assembly, Epoxy Coated		Each	1,465	
Noise Abatement Wall Anchor Rod Assembly		Each	50	

PHASE 3

Bar	No.	Size	Length (m)	Shape

PHASE 3 (CONT.)

Bar	No.	Size	Length (m)	Shape

Concrete, C, Superstructure	m^3	
Surface Seal (Estimated)	m^2	
Reinforcing Bars, Epoxy Coated	kg	
Threaded Tie Bar Assembly, Epoxy Coated	Each	
Drainage Structures Type OS	Each	
Noise Abatement Wall Anchor Rod Assembly	Each	

NOTES:

Reinforcement bars designated (E) shall be epoxy coated.

All concrete edges shall have a 20 mm chamfer.

All dimensions are in millimeters (mm) except as noted.

PHASE 3 FOR INFORMATION ONLY

ILLINOIS DEPARTMENT OF TRANSPORTATION
F.A.I. ROUTE 80/94 (BORMAN EXPRESSWAY)
OVER LITTLE CALUMET RIVER & N.I.C.T.D. R.O.W.

SUPERSTRUCTURE DETAILS (2 OF 2)
SECTION 2626.2-R-1
LAKE COUNTY, INDIANA
STATION 8+470.000
STRUCTURE NO. I-80-1-8460 (EB & WB)
DATE 07/04 **(016-1003 & 016-1004)**

AMERICAN CONSULTING ENGINEERS