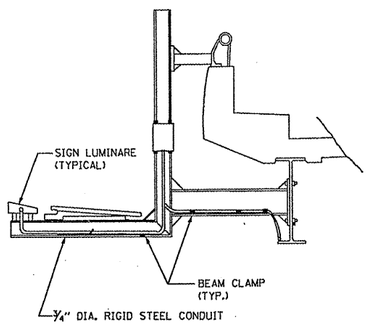

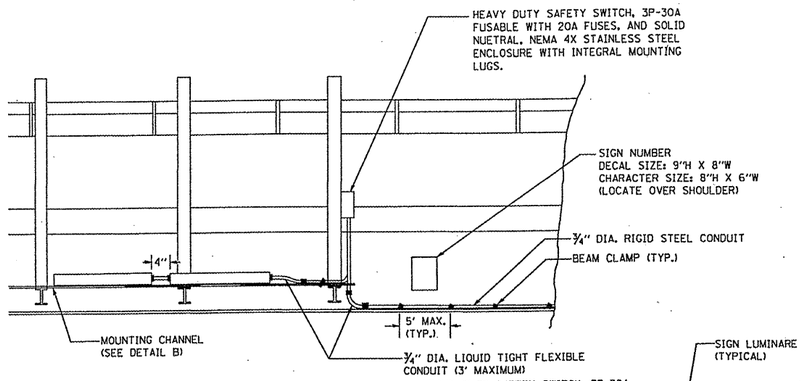

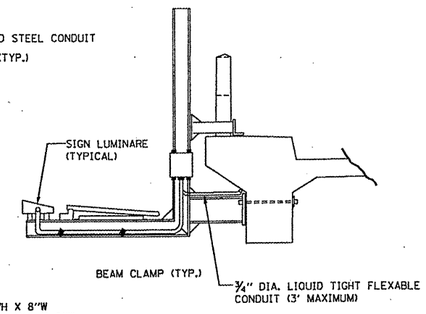

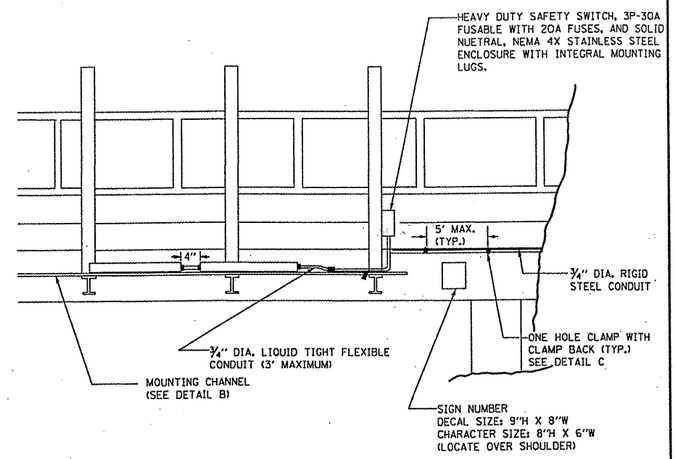

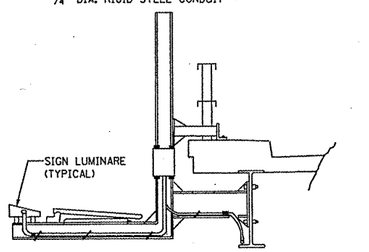

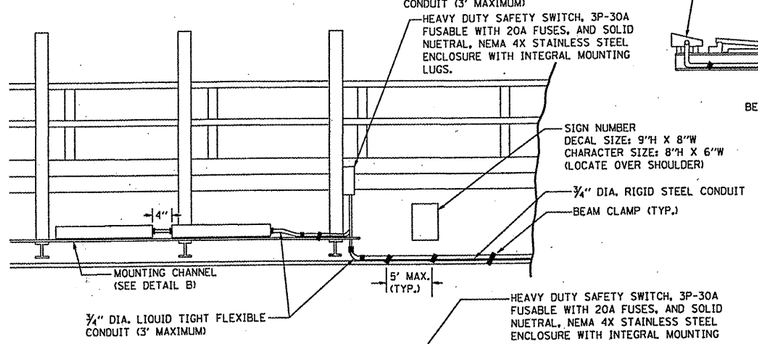

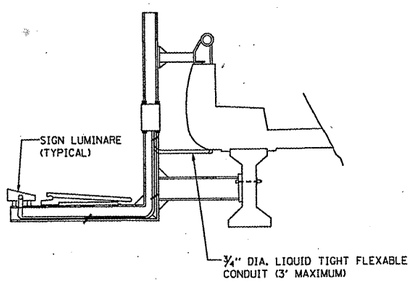

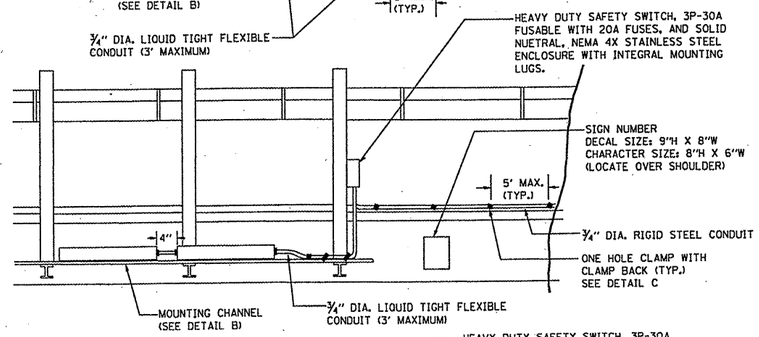

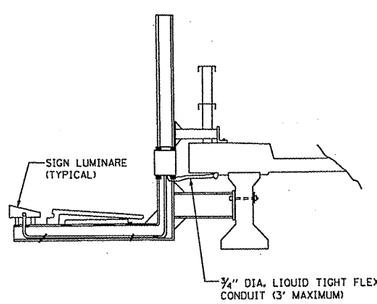

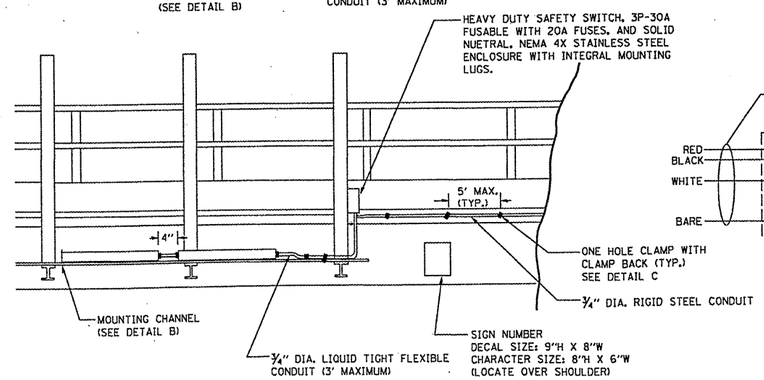

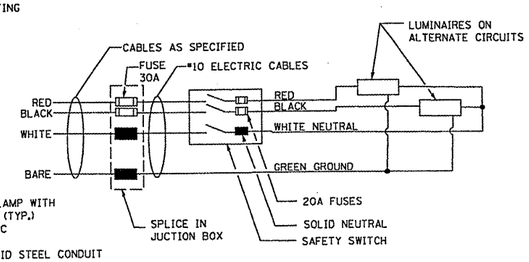

WIRING DIAGRAM

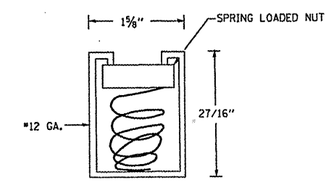

DETAIL B
CONTINUOUS-SLOT MOUNTING CHANNEL GALVINIZED STEEL

DETAIL C

FILE NAME = c:\pw_work\PWIDOT\LEYSA\d0108315\be602.dgn	USER NAME = leysa	DESIGNED -	REVISED -
		DRAWN -	REVISED -
	PLOT SCALE = 100.0000 ' / IN.	CHECKED -	REVISED -
	PLOT DATE = 11/30/2009	DATE - 04-14-08	REVISED -

STATE OF ILLINOIS
DEPARTMENT OF TRANSPORTATION

ELECTRIC CONNECTION TO SIGN STRUCTURE
BRIDGE TYPE

SCALE: NONE | SHEET NO. 1 OF 1 SHEETS | STA. | TO STA.

F.A.I. RTE.	SECTION	COUNTY	TOTAL SHEETS	SHEET NO.
57	0203-100 IHB-I	Cook	11	8
	BE-602	CONTRACT NO. 60J19		
FED. ROAD DIST. NO. 1	ILLINOIS	FED. AID PROJECT		

be602.dgn 11/30/2009 2:05:37 PM User=leysa