PHASE DESIGNATION DIAGRAM

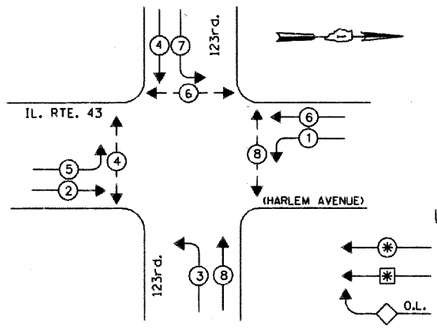

CONTROLLER SEQUENCE

LEGEND

- DUAL ENTRY PHASE
- SINGLE ENTRY PHASE
- O.L. — OVERLAP
- PEDESTRIAN PHASE
- * NUMBER REFERS TO ASSOCIATED PHASE

EMERGENCY VEHICLE PREEMPTION SEQUENCE

(FOR FIRE STATION)

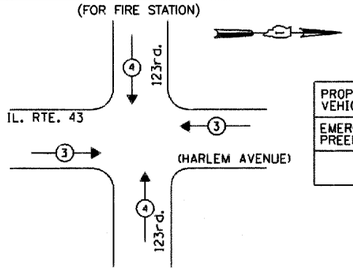

PROPOSED EMERGENCY VEHICLE PREEMPTORS		
EMERGENCY VEHICLE PREEMPTOR	3	4
MOVEMENT	⇆	↓↑

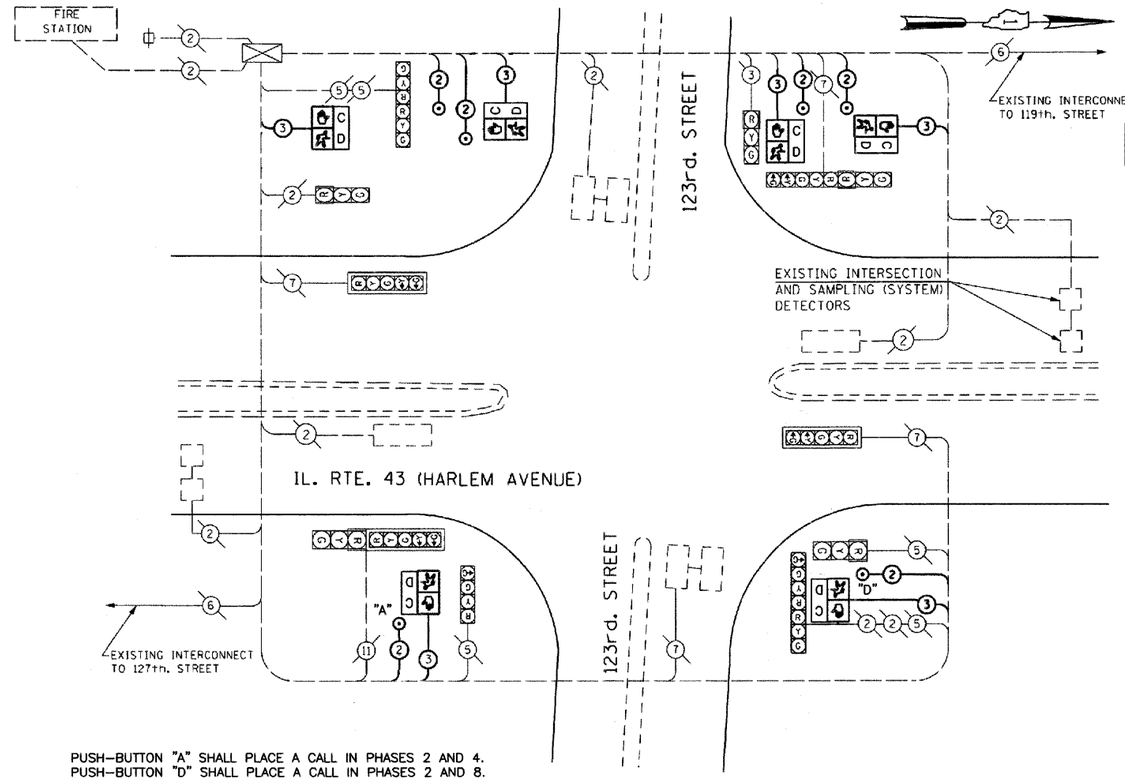

PUSH-BUTTON "A" SHALL PLACE A CALL IN PHASES 2 AND 4.
PUSH-BUTTON "D" SHALL PLACE A CALL IN PHASES 2 AND 8.

CABLE PLAN

NOT TO SCALE

CABLE PLAN LEGEND

EXISTING	PROPOSED	
C	G	8" (200mm) TRAFFIC SIGNAL SECTION
R	R	12" (300mm) TRAFFIC SIGNAL SECTION
W	W	12" (300mm) PEDESTRIAN SIGNAL SECTION
DW OR W	C D	12" (300mm) PEDESTRIAN SIGNAL SECTION
		CONTROLLER CABINET
		SERVICE INSTALLATION
T	T	TELEPHONE INSTALLATION
		VEHICLE DETECTOR, INDUCTION LOOP
		MAGNETIC DETECTOR
		EMERGENCY VEHICLE LIGHT DETECTOR
		CONFIRMATION BEACON
		PUSH-BUTTON DETECTOR
2	2	DENOTES NUMBER OF CONDUCTORS, ALL CABLE NO. 14 EXCEPT AS INDICATED. ALL LOOP DETECTOR CABLE TO BE SHIELDED.
1	1	GROUND CABLE IN CONDUIT NO.6 SOLID COPPER (GREEN)
24	24	FIBER OPTIC CABLE IN CONDUIT NO. 62.5/125 2-MM12F & SM12F
R Y G +Y +G "P"	R Y G +Y +G "P"	SIGNAL FACE WITH BACKPLATE. "P" INDICATES PROGRAMMED HEAD.
"E"	"E"	RAILROAD CONTROL CABINET
"E"	"E"	ILLUMINATED SIGN, FIBER OPTIC "NO LEFT TURN"
"E"	"E"	ILLUMINATED SIGN, FIBER OPTIC "NO RIGHT TURN"
H/C	H/C	GROUND ROD AT HANDHOLE, DOUBLE HANDHOLE, OR CONTROLLER
P	P	GROUND ROD AT POST OR MAST ARM POLE
S	S	GROUND ROD AT ELECTRIC SERVICE INSTALLATION
	V	VIDEO DETECTION CAMERA (SINGLE)
	B	UPS - BATTERY BACK-UP SYSTEM

SCHEDULE OF QUANTITIES

QTY	UNIT	ITEM DESCRIPTION
480	SQ. FT.	THERMOPLASTIC PAVEMENT MARKING-LETTERS AND SYMBOLS
409	FOOT	THERMOPLASTIC PAVEMENT MARKING-LINE 6"
110	FOOT	THERMOPLASTIC PAVEMENT MARKING-LINE 24"
1	EACH	MAINTENANCE OF EXISTING TRAFFIC SIGNAL INSTALLATION
760	FOOT	ELECTRIC CABLE IN CONDUIT, SIGNAL NO. 14 2C
750	FOOT	ELECTRIC CABLE IN CONDUIT, SIGNAL NO. 14 3C
6	EACH	PEDESTRIAN SIGNAL HEAD, L.E.D., 1-FACE, BRACKET MOUNTED WITH COUNTDOWN TIMER
6	EACH	PEDESTRIAN PUSH-BUTTON
1	EACH	MODIFY EXISTING CONTROLLER

I.D.O.T. TRAFFIC SIGNAL INSTALLATION ELECTRICAL SERVICE REQUIREMENTS

TYPE	NO LAMPS	WATTAGE INCAND.	WATTAGE LED	% OPERATION	TOTAL WATTAGE
SIGNAL (RED)	14	135	17	0.50	119.0
(YELLOW)	14	135	25	0.25	87.5
(GREEN)	14	135	15	0.25	52.5
ARROW	10	135	12	0.10	12.0
PED. SIGNAL	6	90	25	1.00	150.0
CONTROLLER	1	100	100	1.00	100.0
ILLUM. SIGN				0.05	
FLASHER				0.50	
				TOTAL =	421.0

ENERGY COSTS TO:
ILLINOIS DEPARTMENT OF TRANSPORTATION
201 WEST CENTER COURT
SCHAUMBURG, ILLINOIS 60196-1096

ENERGY SUPPLY CONTACT: Ms. DOLORES KREMNITZER
PHONE: (815) 724-5241
COMPANY: COMED-EDISON

FOUNDATION (DEPTH)	FT. (m)	CABLE SLACK	FT. (m)	VERTICAL	FT. (m)
TYPE A-POST	4 (1.2)	HANDHOLE	6.5 (2.0)	ALL FOUNDATIONS	3.5 (1.0)
	4 (1.2)	DOUBLE HANDHOLE	13 (4.0)	MAST ARM (L) POLE	20'+L-2=
E-M.ARM POLE		SIGNAL POST	2 (1.0)		(6m+L-0.6m)=
24" (600mm)	10 (3.0)	CONTROLLER CAB.	1 (0.5)	BRACKET MOUNTED	13 (4.0)
30" (750mm)	15 (4.6)	FIBER OPTIC	13 (4.0)	PED. PUSHBUTTON	4 (1.2)
		ELECTRIC SERVICE	1 (0.5)	ELECTRIC SERVICE	13.5 (4.1)
		GROUND CABLE	1 (0.5)	SERVICE TO GROUND	13.5 (4.1)
				POST MOUNTED	6 (1.8)

PLOT DATE: Dec 24, 2009
FILENAME: H:\09-PH\30024PLANS-ENG\REV-1.dwg\09-PH-2002 09-12-24.dwg

FILE NAME = *FILEL*	USER NAME = *USER*	DESIGNED -	REVISED -
		DRAWN -	REVISED -
	PLOT SCALE = *SCALE*	CHECKED -	REVISED -
	PLOT DATE = *DATE*	DATE -	REVISED -

STATE OF ILLINOIS
DEPARTMENT OF TRANSPORTATION

SCHEDULE OF QUANTITIES, CABLE PLAN AND PHASE DESIGNATION DIAGRAM, IL. 43 (HARLEM AVE.) AND 123RD STREET

SCALE: NTS | SHEET NO. OF SHEETS | STA. TO STA.

F.A.P. RTE.	SECTION	COUNTY	TOTAL SHEETS	SHEET NO.
348	09-00044-00-SW	COOK	29	18
		CONTRACT NO. 63413		
		ILLINOIS FED. AID PROJECT		