STD. 407

NOT TO SCALE

NOTES:

1. A water service shall be installed to serve each adjoining lot, tract of land, or building site.
2. Water services shall extend to the curb box.
3. The minimum size water service shall be 1" copper watertube, Type K.
4. All copper connections shall be made with a flared joint.
5. Service taps 1" in size shall be made with a corporation stop.
6. Service taps greater than 1" up to and including 2" shall be made with a stainless steel tapping sleeve and a corporation stop.
7. Service taps larger than 2" in size shall use a stainless steel tapping sleeve and a tapping valve.
8. All copper water services shall be turned off, and left water tight by crimping or plugging the end. The end of the service shall be marked with a 2"x4"x8' board. The top 2' of the board shall be painted blue.
9. All water services shall be covered with a minimum of 1' of FA-6.
10. Services within the right-of-way shall then be backfilled with CA-6 to within 1' of the finished grade.
11. Curb stops shall be furnished and installed for each water service.
12. Curb stops shall be round-way type, Mueller Ori-Seal or approved equal, set on a flat concrete block, 12"x12"x1".
13. Curb boxes shall be of the Buffalo screw type, with an arch-type saddle. They shall be staked in place to assure permanent alignment, and marked with a 2"x4"x8' board. The last 2' of the board shall be painted blue.
14. Curb box lids shall contain the word "Water".
15. Curb boxes shall not be located in any sidewalk or driveway.

A. Tap service piping copper tube Type K 1" dia. min.

B. Corporation stop Mueller or approved equal

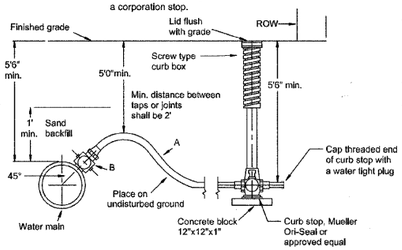

WATER SERVICE CONNECTION

REVISIONS		VILLAGE OF ADDISON
5/98		APPROVED: 2/2/94
		R. ESPEDIDO, P.E., VILLAGE ENGINEER

STD. 406.4

NOT TO SCALE

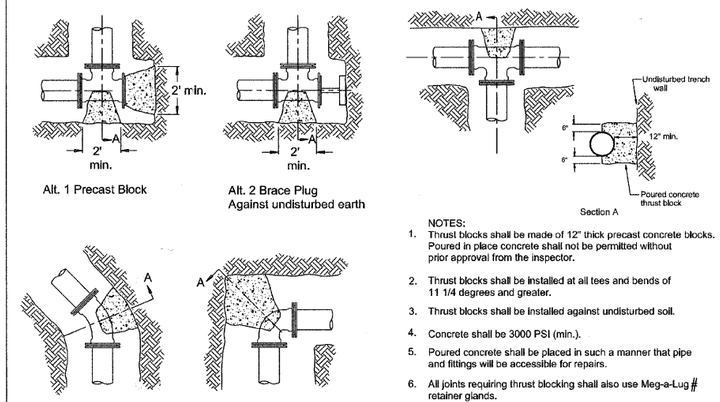

NOTES:

1. Thrust blocks shall be made of 12" thick precast concrete blocks. Poured in place concrete shall not be permitted without prior approval from the inspector.
2. Thrust blocks shall be installed at all tees and bends of 11 1/4 degrees and greater.
3. Thrust blocks shall be installed against undisturbed soil.
4. Concrete shall be 3000 PSI (min.).
5. Poured concrete shall be placed in such a manner that pipe and fittings will be accessible for repairs.
6. All joints requiring thrust blocking shall also use Meg-a-Lug # retainer glands.

THRUST BLOCK INSTALLATION

REVISIONS		VILLAGE OF ADDISON
5/98		APPROVED: 2/2/94
8/03		R. ESPEDIDO, P.E., VILLAGE ENGINEER

STD. 411

NOT TO SCALE

FIRE HYDRANT SPECIFICATIONS:

1. Fire hydrant - Clow-Eddy F-2640 with breakaway flange.
2. Inlet connection - 6" flanged
3. Main valve opening - 5 1/4"
4. Hose nozzles - (2) 2 1/2"
5. Pumper nozzle - 4 1/2"
6. Thread pattern - National standard
7. Auxiliary valve - 6" Resilient Wedge Gate Valve

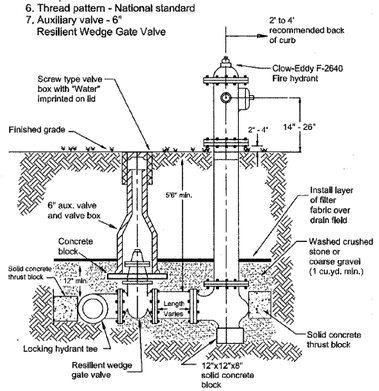

NOTES:

1. All fire hydrants shall be painted yellow (Dura-King Supreme #457-57 School Bus Yellow Truck, Tractor, and Implement Enamel)#
2. The fire hydrant shall open by turning to the left (counter clockwise).
3. All nozzles shall be fitted with cast iron threaded caps securely connected to the fire hydrant with chain.
4. All fire hydrants shall be installed with a locking hydrant tee, and thrust blocking installed behind the hydrant tee.
5. A layer of filter fabric shall be installed over the drain field.
6. Fire hydrants shall be set on a 12"x12"x8" solid concrete block, and a thrust block positioned behind the fire hydrant.
7. Poured in place concrete blocking will not be allowed.
8. A minimum of 1 cu.yd. of washed gravel shall be placed around the fire hydrant.
9. The fire hydrant and auxiliary valve shall be staked in place to assure permanent alignment.
10. Fire hydrants shall be installed in such a manner that the pumper connection faces the street.
11. The auxiliary valve shall be bolted directly to the locking hydrant tee.

FIRE HYDRANT

REVISIONS		VILLAGE OF ADDISON
2/97	5/98	APPROVED: 2/2/94
8/03		R. ESPEDIDO, P.E., VILLAGE ENGINEER

STD. 408

NOT TO SCALE

Notes:

1. Valve vaults shall be precast reinforced concrete units, conforming to ASTM C-478.
2. Openings through which pipes enter the valve vault shall be blocked shut using solid concrete blocks, non-shrink or hydraulic grout. Cover the grouted area with a bituminous water proofing compound on the outside only.
3. Precast sections shall be set in a full bed of bituminous mastic, or two continuous rows of pre-formed, bituminous mastic material (E-Z Stick or approved equal) to prevent inflow.
4. Interior joints are to be dressed up with non-shrink or hydraulic grout.

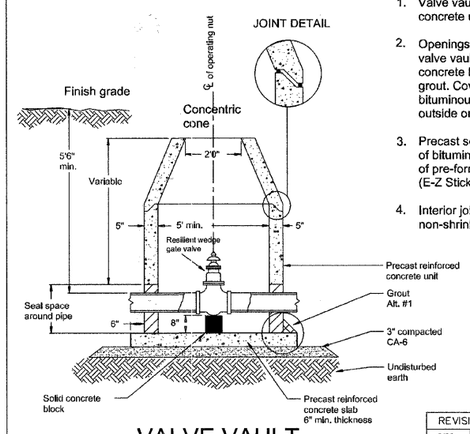

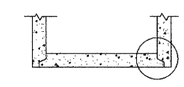

Alt. # 2

VALVE VAULT (Water tight)

REVISIONS		VILLAGE OF ADDISON
8/03		APPROVED: 2/2/94
		R. ESPEDIDO, P.E., VILLAGE ENGINEER

OR APPROVED EQUAL

*3884 ARMY TRAIL BLVD.
*2625 MILL ROAD

BAXTER & WOODMAN Consulting Engineers

DESIGNED - JJS	REVISED - VILLAGE REVIEW 9-08-09	
DRAWN - UKB	REVISED - VILLAGE REVIEW 11-05-09	
CHECKED - SMV	REVISED - IDOT REVIEW 11-17-09	
DATE - 8-19-09	REVISED -	

VILLAGE OF ADDISON, ILLINOIS
MILL ROAD AND ARMY TRAIL BOULEVARD
STP IMPROVEMENTS

WATER MAIN AND MISCELLANEOUS DETAILS

SCALE: | PROJECT NO: 070142 | STA. | TO STA.

F.A.U. RTE.	SECTION	COUNTY	TOTAL SHEETS	SHEET NO.
*	09-00098-00-RS	DuPage	69	54
	C-91-056-10	CONTRACT NO. 63427		
FED. ROAD DIST. NO. 1	ILLINOIS	FED. AID PROJECT M-9003 (474)		

I:\ADDIN\070142-ARMY TRAIL-MILL LAPP & WATER MAIN\CADD-SURVEY\DRAWINGS\DWGS\070142-WM-DETS.DWG 54
Plotted: 11/18/2009 3:03 PM By: 231UKB
Copyright © 2009, By Baxter & Woodman, Inc.
State of Illinois - Professional Design Firm
License No. - 184-001121 - Expires 4-30-11