TYPICAL PAVEMENT MARKINGS

TYPICAL PAVEMENT MARKING FOR FLUSH MEDIAN AT LEFT TURN LANE

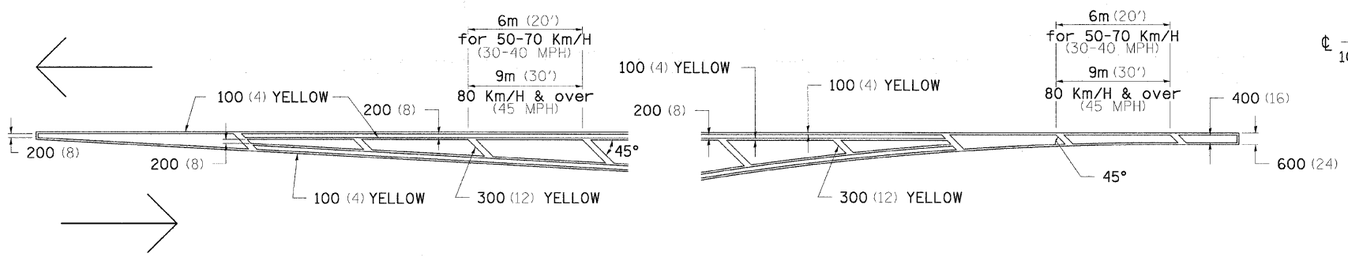

MEDIAN PAVEMENT MARKING

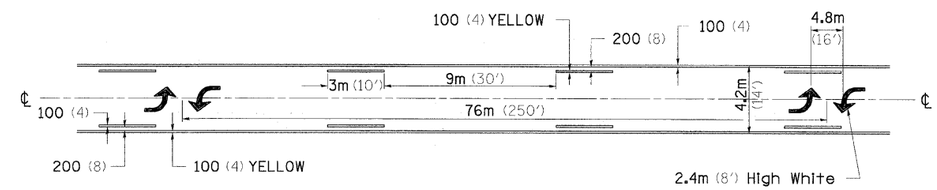

** ALL DIMENSIONS ARE IN MILLIMETERS (INCHES) UNLESS OTHERWISE NOTED.

TYPICAL ISLAND OFFSET SHOULDER WIDTH

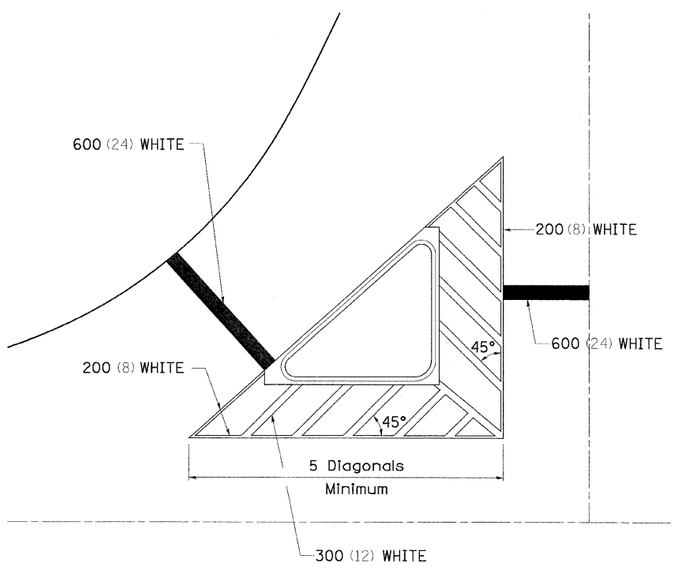

TYPICAL PARKING SPACING

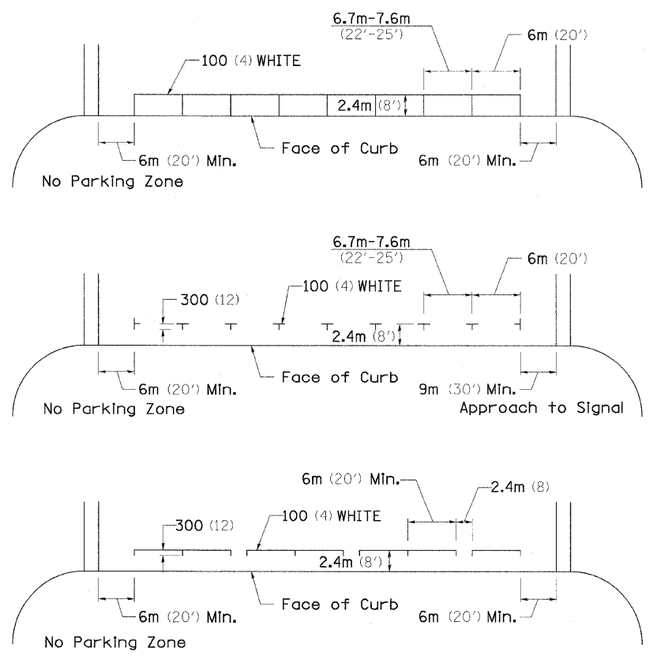

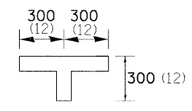

STANDARD CROSSWALK MARKING

See Schedules for Locations

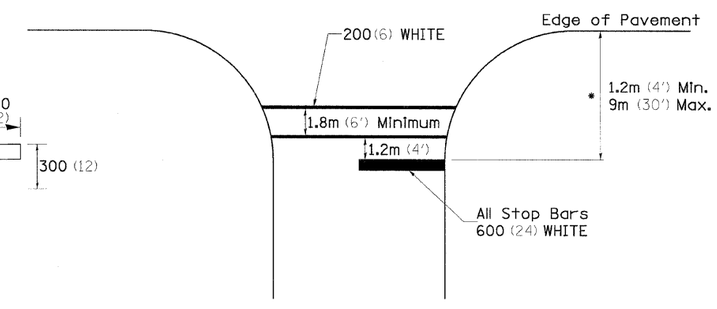

* Distance to the nearest edge of the intersecting roadway in the absence of a marked crosswalk.

TYPICAL PAVEMENT MARKINGS SHEET 1 OF 3 41.1

FILE NAME = H:\Projects\2944\DGNS\Z262075TD2.dgn	USER NAME = @USER@	DESIGNED -	REVISED - 10-21-08	STATE OF ILLINOIS DEPARTMENT OF TRANSPORTATION	REGION 2 / DISTRICT 2 STANDARD	F.A. RTE.	SECTION	COUNTY	TOTAL SHEETS / SHEET NO.
		DRAWN -	REVISED -			55	(W-1-15d)BR-1	WINNEBAGO	59 / 50
	PLOT SCALE = 1.000 ' / IN.	CHECKED -	REVISED -					CONTRACT NO.	
	PLOT DATE = 11/30/2009	DATE -	REVISED -		SCALE: SHEET NO. OF SHEETS STA. TO STA.	FED. ROAD DIST. NO.	ILLINOIS	FED. AID PROJECT	