DETAILS OF PLANTING AND BRACING TREES

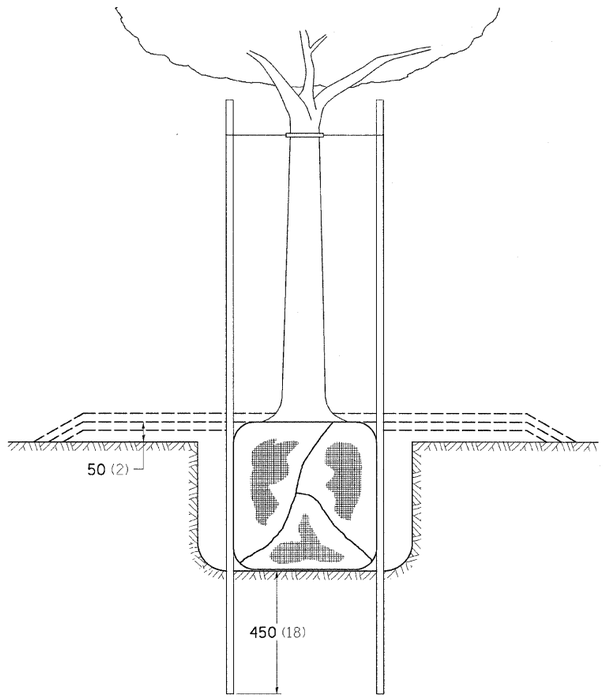

TREES SMALLER THAN 115 (4½) IN DIAMETER

SMALL TREE SIZE	A DIAMETER OF BALL OR ROOT SYS.	B DEPTH OF HOLE EXCAVATION	C WIDTH OF HOLE EXCAVATION	D THICKNESS OF MULCH COVER	E DEPTH OF BALL OR ROOT SYS.	F VOLUME OF MULCH COVER m^3 (CU. YDS.)
1.5-1.8m (5'-6')	400 (16)	250 (10)	750 (30)	100 (4)	300 (12)	0.41 (0.54)
1.5-1.8m (5'-6') BB	400 (16)	250 (10)	750 (30)	100 (4)	300 (12)	0.41 (0.54)
1.8-2.0m (6'-7') BB	450 (18)	300 (12)	750 (30)	100 (4)	350 (14)	0.41 (0.54)
2.0-2.4m (7'-8') BB	500 (20)	275 (11)	750 (30)	100 (4)	325 (13)	0.41 (0.54)
2.4-3.0m (8'-10') BB	600 (24)	350 (14)	900 (36)	100 (4)	400 (16)	0.47 (0.61)
3.0-3.6m (10'-12') BB	650 (26)	375 (15)	900 (36)	100 (4)	425 (17)	0.47 (0.61)

LARGE TREE SIZE	A DIAMETER OF BALL OR ROOT SYS.	B DEPTH OF HOLE EXCAVATION	C WIDTH OF HOLE EXCAVATION	D THICKNESS OF MULCH COVER	E DEPTH OF BALL OR ROOT SYS.	F VOLUME OF MULCH COVER m^3 (CU. YDS.)
0-50 (0-2)	500 (20)	275 (11)	900 (36)	100 (4)	325 (13)	0.47 (0.61)
50-65 (2-2½)BB	600 (24)	350 (14)	1200 (48)	100 (4)	400 (16)	0.60 (0.78)
65-75 (2½-3)BB	700 (28)	425 (17)	1200 (48)	100 (4)	475 (19)	0.60 (0.78)
75-90 (3-3½) BB	800 (32)	425 (17)	1500 (60)	100 (4)	475 (19)	0.73 (0.96)
90-100 (3½-4) BB	900 (36)	500 (20)	1500 (60)	100 (4)	550 (22)	0.73 (0.96)
100-115 (4-4½) BB	1000 (40)	550 (22)	1800 (72)	100 (4)	600 (24)	0.89 (1.16)
115-125 (4½-5) BB	1100 (44)	600 (24)	1800 (72)	100 (4)	650 (26)	0.89 (1.16)
125-140 (5-5½) BB	1200 (48)	675 (27)	2100 (84)	100 (4)	725 (29)	1.06 (1.38)

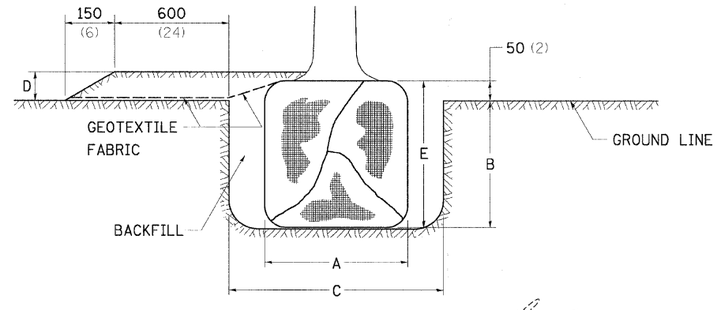

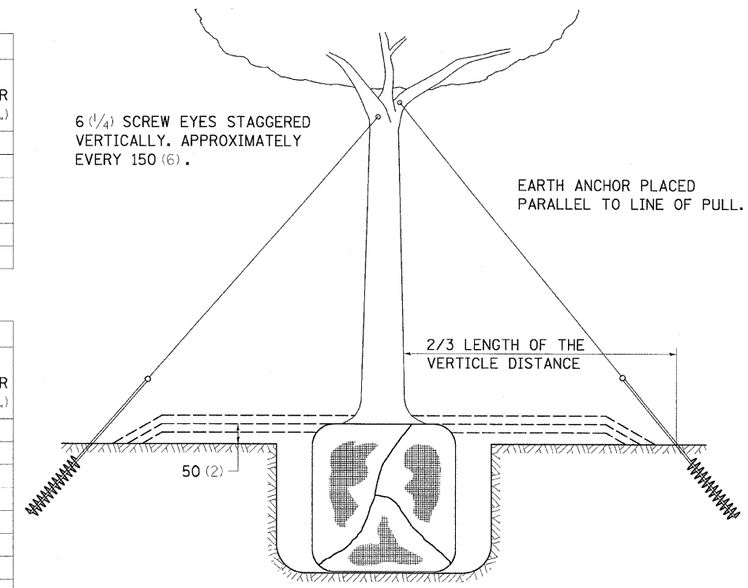

TREES OVER 115 (4½) IN DIAMETER

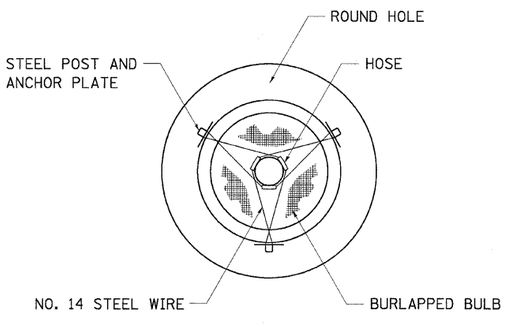

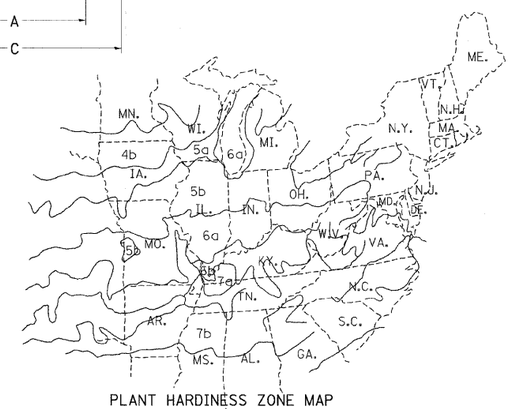

PLANT HARDINESS ZONE MAP

U.S. DEPARTMENT OF AGRICULTURE
AGRICULTURAL RESEARCH SERVICE
PUBLICATION NO. 814

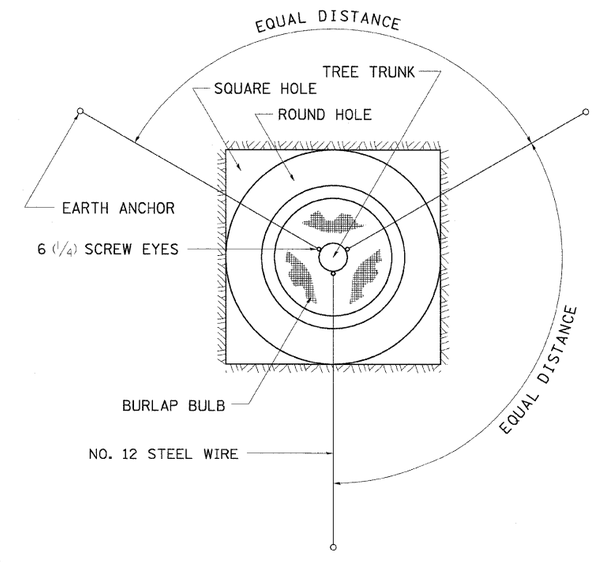

ALL DIMENSIONS ARE IN MILLIMETERS (INCHES)
UNLESS OTHERWISE NOTED.

DETAILS OF PLANTING AND BRACING TREES **92.1**

FILE NAME = H:\Projects\2944\DGNS\Z06207STD2.dgn	USER NAME = $USER$	DESIGNED -	REVISED - 10-15-04	STATE OF ILLINOIS DEPARTMENT OF TRANSPORTATION	REGION 2 / DISTRICT 2 STANDARD	F.A. RTE. 55	SECTION (W-1-15d)BR-1
		DRAWN -	REVISED -			COUNTY WINNEBAGO	TOTAL SHEETS 59 / SHEET NO. 53
	PLOT SCALE = 1.000 ' / IN.	CHECKED -	REVISED -			CONTRACT NO. 64D22	
	PLOT DATE = 11/30/2009	DATE -	REVISED -		SCALE: SHEET NO. OF SHEETS STA. TO STA.	FED. ROAD DIST. NO.	ILLINOIS FED. AID PROJECT