3-5-10 Letting, Item 030

FOR INDEX OF SHEETS, SEE SHEET NO. 2

F.A.P RTE.	SECTION	COUNTY	TOTAL SHEETS	SHEET NO.
55	(W-1-15d)BR-1	WINNEBAGO	59	1
FED. ROAD DIST. NO.	ILLINOIS	CONTRACT NO. 64D22		

STATE OF ILLINOIS
DEPARTMENT OF TRANSPORTATION
DIVISION OF HIGHWAYS

PROPOSED
HIGHWAY PLANS

PROJECT RS-0055(105)

FAS ROUTE 55 (IL 70)
SECTION (W-1-15d)BR-1
IL. ROUTE 70 BRIDGE REPLACEMENT
AND ROADWAY RECONSTRUCTION
OVER SOUTH BRANCH OF OTTER CREEK
WINNEBAGO COUNTY
C-92-194-09

DESIGN DESIGNATION
900 (31) MAJOR COLLECTOR 3.81 (FD-20)

TRAFFIC DATA
FAP ROUTE 55 (IL-70)
2011 ADT = 3,850
2031 ADT = 8,975
9.8% TRUCKS; 2031 DHV: 900
POSTED SPEED LIMIT (40MPH)

PROJECT LOCATED IN:
VILLAGE OF DURAND
DURAND TOWNSHIP (SECTION 15)
WINNEBAGO COUNTY

D-92-062-07

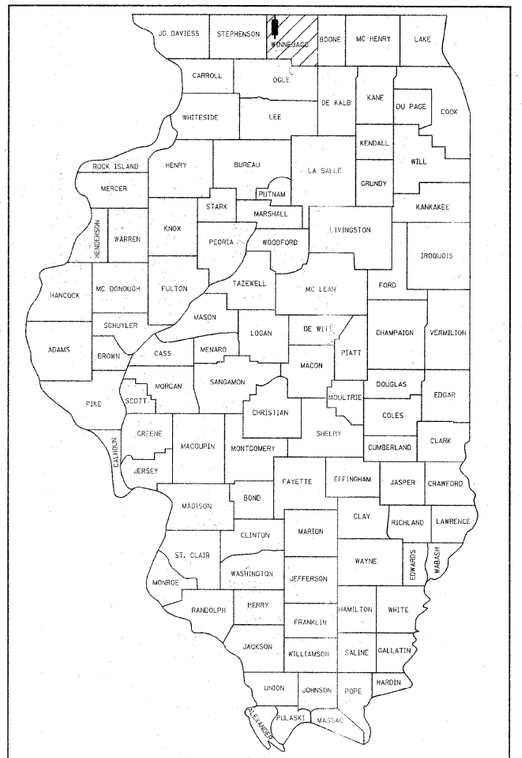

LOCATION OF SECTION INDICATED THUS:-

IL - 70 BRIDGE
OVER OTTER CREEK
STR. NO. 101-0086
REMOVAL AND REPLACEMENT OF
SUPERSTRUCTURE AND
ROADWAY RECONSTRUCTION

PROJECT BEGINS
STA. 57+65

PROJECT ENDS
STA. 66+00

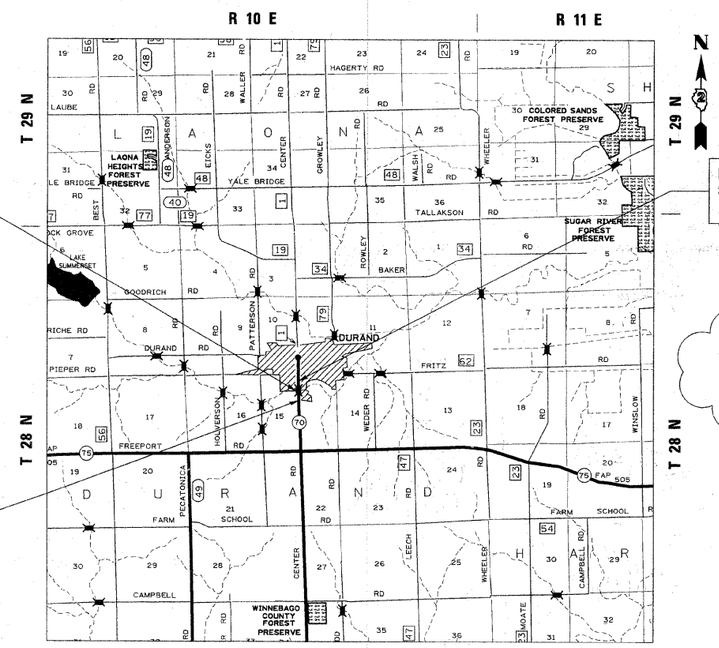

SCALE: 1"=1 MILE

LOCATION MAP

GROSS & NET LENGTH = 835 FT (0.158 MILES)

100' 10' 200' 20' 300' 30' — 1"= 100' 10'
0 50' 100' — 1"= 50'
0 50' 100' — 1"= 40'
0 50' 100' — 1"= 30'
0 50' 100' — 1"= 20'

FULL SIZE PLANS HAVE BEEN PREPARED USING STANDARD ENGINEERING SCALES. REDUCED SIZED PLANS WILL NOT CONFORM TO STANDARD SCALES. IN MAKING MEASUREMENTS ON REDUCED PLANS, THE ABOVE SCALES MAY BE USED.

J.U.L.I.E.
JOINT UTILITY LOCATION INFORMATION FOR EXCAVATION
1-800-892-0123
OR 811

IDOT PROJECT MANAGER - MR. COREY CONDERMAN (815) 284-5936
HOH PROJECT MANAGER - MR. GERALD BERNER (312) 424-3650

CONTRACT NO. 64D22

11-30-09
date
STATE OF ILLINOIS MOHAMMAD M. HUSAIN 0081-005529 STRUCTURAL ENGINEER
expires 11-30-2010
signature

FINAL
11-30-09

SRENT A. PORFILE 062-060862 REGISTERED PROFESSIONAL ENGINEER STATE OF ILLINOIS
License exp. 11/30/2011

HOH HARRY O. HEFTER-ASSOCIATES, INC. DESIGN AND CONSULTING ENGINEERS
55 East Jackson Blvd. Suite 600 Chicago, Il 60604 312-346-8131
PROJECT NUMBER 2944

STATE OF ILLINOIS
DEPARTMENT OF TRANSPORTATION
DIVISION OF HIGHWAYS

SUBMITTED Dec. 4, 2009
Mary F. Ryan
DEPUTY DIRECTOR OF HIGHWAYS, REGION ENGINEER
January 29, 2010
Scott E. Stitt P.E.
Acting ENGINEER OF DESIGN AND ENVIRONMENT
January 29, 2010
Christine M. Reed
DIRECTOR OF HIGHWAYS, CHIEF ENGINEER

PRINTED BY THE AUTHORITY
OF THE STATE OF ILLINOIS

DISTRICT 2

INDEX OF SHEETS

SHEET NO:	DESCRIPTION
1	COVER SHEET
2	INDEX OF SHEETS, STATE STANDARDS AND COMMITMENTS
3	GENERAL NOTES
4-5	SUMMARY OF QUANTITIES
6-9	SCHEDULE OF QUANTITIES
10	TYPICAL SECTIONS
11-12	ALIGNMENT, TIES AND BENCHMARKS
13	ROADWAY REMOVAL & EXISTING UTILITIES PLAN
14-15	PROPOSED ROADWAY PLAN & PROFILE
16	MAINTENANCE OF TRAFFIC NOTES
17	STAGING PLAN
18	EROSION AND SEDIMENT CONTROL PLAN
19	PAVEMENT MARKING PLAN
20	LANDSCAPING PLAN
21-41	BRIDGE PLANS
	DISTRICT DETAILS
42	37.4 DELINEATOR & POST ORIENTATION 50.4 TYPICAL BENCHMARK DETAIL ON EXISTING EMBANKMENT 79.4b INLET SPECIAL, NO. 5 79.4d NOSE TYPE FOR INLET TOP SLAB
43	79.4e INLET SPECIAL NO. 3,4,5,6 REINFORCEMENT DETAIL 88.4 DRAIN FOR AGGREGATE BASES IN URBAN AREAS 90.4 TREE REPLACEMENT SCHEDULE 99.4 STOP LINE SIGN FOR TEMPORARY SIGNALS
44	10.2 INLET, SPECIAL 21.2 STANDARD INLET FOR CURB & GUTTER, TYPE B-6.24
45	29.2 EROSION CONTROL DETAILS FOR SILT FENCE 39.2 INFORMATIONAL WARNING SIGN (FOR NARROW TRAVEL LANES)
46	66.2 WITNESS MARKER & PERMANENT SURVEY MARKERS, TYPE II 75.2 ENTRANCE SIGN FOR USE WITH TEMPORARY SIGNALS
47	2.1 STORM AND WATER POLLUTION PREVENTION PLAN
48	3.1 MAILBOX TURNOUT IN CURB & GUTTER SECTION
49	25.1 ENTRANCE APPROACHES - URBAN AREAS
50-52	41.1 TYPICAL PAVEMENT MARKINGS
53	92.1 DETAIL OF PLANTING AND BRACING TREES
54-59	CROSS SECTIONS
	HIGHWAY STANDARDS

LIST OF ILLINOIS DOT HIGHWAY STANDARDS

000001-05 STANDARD SYMBOLS, ABBREVIATIONS AND PATTERNS
001001-02 AREAS OF REINFORCEMENT BARS
280001-05 TEMPORARY EROSION CONTROL SYSTEMS
420001-07 PAVEMENT JOINTS
420401-08 BRIDGE APPROACH CONNECTOR
421001-02 BAR REINFORCEMENT FOR CRC PAVEMENT
515001-03 NAME PLATE FOR BRIDGES
542301-02 PRECAST REINFORCED CONCRETE FLARED END SECTION
542401-01 METAL END SECTIONS FOR PIPE CULVERT
601101-01 CONCRETE HEADWALL FOR PIPE DRAIN
602401-02 MANHOLE, TYPE A
604001-03 FRAME AND LIDS TYPE 1
606001-04 CONCRETE CURB TYPE B AND COMBINATION CONCRETE CURB AND GUTTER
630301-05 SHOULDER WIDENING FOR TYPE 1 (SPECIAL) GUARDRAIL TERMINALS
631031-08 TRAFFIC BARRIER TERMINAL, TYPE 6
635001-01 DELINEATORS
635006-03 REFLECTOR AND TERMINAL MARKER PLACEMENT
635011-02 REFLECTOR MARKER AND MOUNTING DETAILS
701006-03 OFF-RD OPERATIONS, 2L, 2W, 4.5 m (15') TO 600 mm (24") FROM PAVEMENT EDGE
701011-02 OFF-RD OPERATIONS, 2L, 2W, DAY ONLY
701301-03 LANE CLOSURE, 2L, 2W, SHORT TIME OPERATIONS
701311-03 LANE CLOSURE, 2L, 2W, MOVING OPERATIONS-DAY ONLY
701321-10 LANE CLOSURE, 2L, 2W, BRIDGE REPAIR WITH BARRIER
701326-03 LANE CLOSURE, 2L, 2W, PAVEMENT WIDENING FOR SPEEDS GREATER THAN OR EQUAL TO 45 MPH
701501-05 URBAN LANE CLOSURE, 2L, 2W, UNDIVIDED
701801-04 LANE CLOSURE, MULTI LANE, 1W, 2W, & CROSS WALK OR SW CLOSURE
701901-01 TRAFFIC CONTROL DEVICES
704001-06 TEMPORARY CONCRETE BARRIER
720001-01 SIGN PANEL MOUNTING DETAILS
720006-02 SIGN PANEL ERECTION DETAILS
720011-01 METAL POSTS FOR SIGNS, MARKERS & DELINEATORS
728001-01 TELESCOPING STEEL SIGN SUPPORT
729001-01 APPLICATIONS OF TYPE A & B METAL POSTS (FOR SIGNS & MARKERS)
780001-02 TYPICAL PAVEMENT MARKINGS
781001-03 TYPICAL APPLICATIONS RAISED REFLECTIVE PAVEMENT MARKERS
886001-01 DETECTOR LOOP INSTALLATIONS
886006-01 TYPICAL LAYOUTS FOR DETECTION LOOPS

COMMITMENTS

TWO OF THE EXISTING TREES ARE ORNAMENTAL CONIFERS NEAR A COMMERCIAL DRIVEWAY AT STA. 64+92 LT. CONSIDERATION SHOULD BE GIVEN TO SEEING WHAT THE PROPERTY OWNERS WANTS. THE PROPERTY OWNER IS:

MEDINA MANOR BLDG. INC.
C/O JOHS OKSNEVAD
3676 N. ALPINE RD.
ROCKFORD, IL. 61114

SEE CROSS SECTIONS FOR SPECIAL DITCHES AND BACKSLOPES.

AT THE LOCATIONS WHERE EXCAVATION QUANTITIES ON THE PLANS ARE INDICATED AS HAVING BEEN ESTIMATED, THE ENGINEER WILL OBTAIN ORIGINAL AND FINAL CROSS SECTIONS TO DETERMINE PAY QUANTITIES.

THE REMOVAL OF BITUMINOUS SURFACING NOT ON A RIGID TYPE BASE REMOVED IN CONJUNCTION WITH THE BASE SHALL BE REMOVED AS EARTH EXCAVATION. THE REMOVAL OF BITUMINOUS SURFACING ON A RIGID TYPE BASE REMOVED IN CONJUNCTION WITH THE BASE SHALL BE INCLUDED IN THE CONTRACT UNIT PRICE FOR PAVEMENT REMOVAL OF THE TYPE SPECIFIED.

THE FINAL TOP 100 MM (FOUR INCHES) OF SOIL IN ANY RIGHT-OF-WAY AREA DISTURBED BY THE CONTRACTOR MUST BE CAPABLE OF SUPPORTING VEGETATION. THE SOIL MUST BE FROM THE A HORIZON (ZERO TO 2N DEEP) OF SOIL PROFILES OF LOCAL SOILS. THE CONTRACTOR MAY USE EXISTING TOPSOIL OR FURNISH AND PLACE TOPSOIL TO CONSTRUCT FINAL TOP 4" OF TOPSOIL AND SHALL BE INCLUDED IN THE COST OF EARTH EXCAVATION.

ALL BORROW/WASTE/USE SITES MUST BE APPROVED BY THE DEPARTMENT PRIOR TO REMOVING ANY MATERIAL FROM THE PROJECT OR INITIATING ANY EARTHMOVING ACTIVITIES, INCLUDING TEMPORARY STOCKPILING OUTSIDE THE LIMITS OF CONSTRUCTION

THE CONTRACTOR SHALL SEED ALL DISTURBED AREAS WITHIN THE PROJECT LIMITS. SEEDING CLASS 4 OR 2A SHALL BE USED, EXCEPT IN FRONT OF PROPERTIES WHERE THE GRASS WILL BE MOWED, THEN USE SEEDING, CLASS 1. CLASS 2A SHALL BE USED ON FRONT SLOPES AND DITCH BOTTOMS. CLASS 4 SHALL BE USED BEHIND TYPE A GUTTER, ON ALL BACKSLOPES AND AREAS BEHIND THE BACKSLOPE, AND BEYOND THE TOE OF FRONT SLOPE ON FILL SECTIONS WITHOUT DITCHES.

FERTILIZER NUTRIENTS SHALL BE APPLIED AT THE RATE SPECIFIED IN SECTIONS 250 AND 252 OF THE STANDARD SPECIFICATIONS. THIS SHALL BE INCLUDED IN THE COST OF THE SEEDING.

PREVIOUSLY PUGMILLED STOCKPILES OF "TYPE A" OLDER THAN 1 MONTH WILL NOT BE APPROVED FOR USE UNTIL A MOISTURE CHECK IS RUN TO VERIFY MOISTURE CONTENT. MATERIAL SHIPPED TO PROJECTS WITHOUT BEING TESTED WILL NOT BE ACCEPTED.

THE SUBGRADE ON THIS PROJECT, EXCLUSIVE OF ROCK CUT AREAS IS SCHEDULED TO BE IMPROVED TO A 600 MM (24") DEPTH ACCORDING TO MECHANISTIC PAVEMENT DESIGN. THE AREAS SCHEDULED TO BE IMPROVED TO A DEPTH GREATER THAN 600 MM (24") ARE ESTIMATED BASED ON THE ORIGINAL GEOTECHNICAL INVESTIGATION. THE SUBGRADE SHALL BE PROCESSED IN ACCORDANCE WITH ARTICLE 301.03 OF THE STANDARD SPECIFICATIONS BEFORE THE ENGINEER SHALL DETERMINE THE LIMITS AND THE ADDITIONAL THICKNESS OF IMPROVEMENT REQUIRED, IF ANY. ANY ADDITIONAL UNDERCUTTING REQUIRED AFTER THIS EVALUATION SHALL BE PAID FOR AS EARTH EXCAVATION.

EXCEPT FOR THE TOP 75 MM (3"), ALL AGGREGATE BASES AND SUBBASES 300 MM (12") IN THICKNESS SHALL BE CONSTRUCTED OF AGGREGATE GRADATION CA-2. IF THE SPECIFIED THICKNESS EXCEEDS 300 MM (12"), THE BASES OR SUBBASES SHALL BE CONSTRUCTED OF TOPSIZE 150 MM (6") BREAKER-RUN CRUSHED STONE WITH 70% TO 90% BY WEIGHT, PASSING THE 4" SIEVE AND 15% TO 40% BY WEIGHT, PASSING THE 50 MM (2") SIZE SIEVE, EXCEPT FOR THE TOP 75 MM (3"). THE BREAKER-RUN CRUSHED STONE SHALL BE REASONABLY UNIFORMLY GRADED FROM COARSE TO FINE AND BE TAKEN FROM A QUARRY LEDGE CAPABLE OF PRODUCING CLASS "D" QUALITY AGGREGATE. THE TOP 75 MM (3") SHALL BE GRADATION CA-6 OR CA 10 REGARDLESS OF THICKNESS. THE WATER NECESSARY TO ACHIEVE COMPACTION IN ALL BUT THE TOP 75 MM (3") LAYER MAY BE ADDED AFTER THE SUBBASE OR BASE COURSE IS PLACED ON THE GRADE.

THE FOLLOWING MIXTURE REQUIREMENTS ARE APPLICABLE TO THIS PROJECT:

HOT-MIX ASPHALT MIXTURE REQUIREMENTS

MIXURE USES	SURFACE COURSE, LANE	BINDER COURSE, LANE
PG	PG 64-22	PG 64-22
DESIGN AIR VOIDS	4.0% @ N50	4.0% @ N50
MIXTURE COMPOSITION (GRADATION MIXTURE	IL-9.5 OR 12.5	IL-19.0
FRICTION AGGREGATE	MIX D	
20 YEAR ESAL	1.3	1.3

THE CONTRACTOR WILL BE REQUIRED TO FURNISH 140MM (5 1/2") HIGH BRASS STENCILS AS APPROVED BY THE ENGINEER AND INSTALL STATIONING AT 250' INTERVALS. STATIONING SHALL BE PLACED ON BOTH LANES OF 2-LANE HIGHWAYS AND ON THE OUTSIDE LANES IN BOTH DIRECTIONS ON 4-LANE HIGHWAYS. THE STATIONS SHALL BE PLACED 150MM (6") INSIDE THE PAVEMENT MARKING EDGE SO THEY CAN BE READ FROM THE SHOULDER. THIS WORK WILL BE INCLUDED IN THE COST OF THE FINAL PAVEMENT SURFACE.

GENERAL NOTES

THE EXISTING HOT-MIX ASPHALT ON PRIVATE AND COMMERCIAL ENTRANCES SHALL BE BLADED OFF OR MILLED AND DISPOSED OF OUTSIDE THE PROJECT LIMITS. THIS COULD BE THE ENTIRE ENTRANCE OR TAPERED AT THE END DEPENDING ON IF THE MAINLINE IS RESURFACED OR MILLED AND RESURFACED. THE COST OF THE BLADING, MILLING, ROLLING, AND DISPOSAL IS INCLUDED IN THE CONTRACT UNIT PRICE FOR INCIDENTAL HOT-MIX ASPHALT SURFACING.

THE AREA TO BE PRIMED SHALL BE LIMITED TO THAT WHICH CAN BE COVERED WITH HMA THE SAME DAY, UNLESS OTHERWISE PERMITTED BY THE ENGINEER.

BITUMINOUS AND AGGREGATE PRIME COAT SHALL BE PLACED IN ACCORDANCE WITH SECTION 406 OF THE STANDARD SPECIFICATIONS. THE COST OF THE PRIME COATS SHALL BE INCLUDED IN THE CONTRACT UNIT PRICE PER METRIC TON (TON) FOR BINDER COURSE AND INCIDENTAL HMA SURFACING OF THE TYPE SPECIFIED.

THE NEW NUMBER FOR THIS STRUCTURE WILL BE 101-0191.

THE THICKNESS FOR THE BRIDGE APPROACH PAVEMENT CONNECTOR (FLEXIBLE) ADJACENT TO EXISTING PAVEMENT SHALL BE A MINIMUM OF 300 MM (12"). THE MATERIAL SHALL BE 50 MM (2") HOT-MIX ASPHALT SURFACE COURSE, AND THE REMAINING THICKNESS SHALL BE HOT-MIX ASPHALT BINDER COURSE.

REFLECTOR MARKERS TYPE B SHALL BE INSTALLED ON THE TOP OF BRIDGE PARAPET WALLS. THE MARKERS SHALL BE ACCORDING TO STANDARD 635011 AND THE COLOR AND SPACING ACCORDING TO STANDARD 635006, EXCEPT THE MINIMUM IS 2 PER SIDE.

CULVERT & BRIDGE FLOWS MUST BE MAINTAINED THROUGHOUT THE PROJECT. NORMAL FLOW SHALL BE ALLOWED TO PASS AT THE RATE IT ENTERS THE JOBSITE. HIGH FLOWS SHALL BE ALLOWED TO PASS WITHOUT CAUSING DAMAGE TO UPSTREAM PROPERTIES.

THE CONTRACTOR SHALL REMOVE ALL ENTRANCE CULVERTS IN CONDITION FOR REUSE WHICH ARE NOT TO BE LEFT IN PLACE. THEY SHALL BE CLEANED AND STORED ALONG THE RIGHT OF WAY AS DIRECTED. IN NO CASE SHALL THEY BE ROUGHLY HANDLED OR SHOVED BY HEAVY MACHINERY. UNUSABLE MATERIAL SHALL BE DISPOSED OF BY THE CONTRACTOR AT HIS EXPENSE. COST OF THE WORK TO BE INCLUDED IN THE CONTRACT UNIT PRICE FOR EARTH EXCAVATION.

CONNECTING BANDS FOR CORRUGATED METAL PIPES SHALL BE METAL AND SHALL BE COATED WITH THE SAME MATERIAL AS THE PIPE SECTIONS. THE CONNECTING BANDS SHALL BE A MINIMUM OF 18" WIDE.

THE COST OF REMOVING EXISTING STORM SEWER DURING THE INSTALLATION OF NEW STORM SEWERS SHALL BE INCLUDED IN THE CONTRACT UNIT PRICE FOR THE STORM SEWER BEING INSTALLED.
THE NEW MANHOLE LIDS ON THIS PROJECT SHALL HAVE THE WORD "STORM", "SANITARY", OR "WATER" ON THE LID. THE WORD TO BE USED IS NOTED ON THE PLANS. IT WILL BE THE CONTRACTOR'S RESPONSIBILITY TO DETERMINE THE WORD TO BE USED ON OTHER LIDS NOT NOTED ON THE PLANS. NO ADDITIONAL COMPENSATION WILL BE ALLOWED FOR THIS WORK.

IF, DURING THE PAVING OPERATIONS, THE EXISTING MAILBOXES BECOME A HINDRANCE, THE CONTRACTOR SHALL BE REQUIRED TO CAREFULLY REMOVE AND REINSTALL THE MAILBOXES AS DIRECTED BY THE ENGINEER. THIS WORK SHALL BE INCLUDED IN THE CONTRACT UNIT PRICE FOR THE INCIDENTAL HOT MIX ASPHALT SURFACING.

EMBANKMENT QUANTITIES FOR THE CONSTRUCTION OF THE TRAFFIC BARRIER TERMINALS AS SHOWN IN THE PLANS ARE INCLUDED IN QUANTITIES FOR EARTH EXCAVATION.

THE CONTRACTOR SHALL SUPPLY THE RESIDENT ENGINEER WITH THE MANUFACTURER'S INSTALLATION REQUIREMENTS FOR THE TYPE OF STEEL PLATE BEAM GUARDRAIL TERMINAL TYPE 1 SPECIAL (TANGENT) OR STEEL PLATE BEAM GUARDRAIL TERMINAL TYPE I SPECIAL (FLARED).

ONE 16D GALVANIZED NAIL SHALL BE USED TO TOE NAIL THE WOOD BLOCK OUT TO THE WOOD POST ON ALL TRAFFIC BARRIER TERMINAL TYPE I SPECIALS.

DELINEATORS SHALL BE INSTALLED AS SHOWN IN STANDARD 635001. EXCEPT THAT THE POST SHALL BE ROTATED 180° AND ONLY METAL-BACKED DELINEATORS SHALL BE PERMITTED.

DELINEATORS SHALL BE PLACED AT THE ENDS OF APPROACH GUARDRAIL TERMINAL SECTIONS, AND AT EACH HEADWALL OR END SECTION OF AR CULVERTS. THIS WORK WILL BE PAID FOR AT THE CONTRACT UNIT PRICE EACH FOR DELINEATORS.

PAVEMENT MARKING SHALL BE DONE ACCORDING TO STANDARD 780001, EXCEPT AS FOLLOWS:

1. ALL WORDS, SUCH AS ONLY, SHALL BE 2.4 M (8 FEET) HIGH.
2. ALL NON-FREEWAY ARROWS SHALL BE THE LARGE SIZE.
3. THE DISTANCE BETWEEN YELLOW NO-PASSING LINES SHALL BE 200 MM (8"), NOT 180MM (7") AS SHOWN IN THE DETAIL OF TYPICAL LANE AND EDGE LINES.

PERMANENT SURVEY MARKERS, TYPE II, SHALL BE SET AT THE FOLLOWING LOCATIONS:

1. NORTH SIDE OF BRIDGE.
2. ON BRIDGE
3. SOUTH SIDE OF BRIDGE.

PERMANENT SURVEY MARKERS, TYPE II SHALL BE CAST-IN-PLACE AS SHOWN ON DISTRICT STANDARD 66.2. THE BOTTOM OF THE MARKER SHALL BE 5'-0" BELOW THE GROUND SURFACE.

THE CONTRACTOR SHALL SUBMIT TO THE ENGINEER A DESCRIPTION OF LOCATION, ELEVATION, AND COORDINATES FOR EACH PERMANENT SURVEY MARKER. THE ENGINEER SHALL SUBMIT THIS INFORMATION TO THE SURVEY CREW.

THE TEMPORARY CONCRETE BARRIER SHALL BE ANCHORED TO THE PAVEMENT WITH 6 ANCHORS PER SECTION FROM STA. 57+62.5 TO STA. 66+00.

TREE PLANTING LAYOUT SHALL BE PERFORMED BY THE DISTRICT LANDSCAPE ARCHITECT. MULCH SHALL BE PLACED 4" THICK AND TO THE DIAMETER AROUND THE TREE AS SHOWN ON DISTRICT STANDARD 92.1. THE MULCH SHALL BE HARDWOOD WOOD CHIPS PLACED ON WEED-BARRIER FABRIC. THIS WORK SHALL BE INCLUDED IN THE COST OF THE TREE.

WORK ON THIS PROJECT WILL BE IN PROGRESS AT THE SAME TIME AS WORK ON THE IL 70 / IL 75 PROJECT . WORK ON THESE PROJECTS SHALL BE SCHEDULED TO KEEP INTERFERENCE BETWEEN ALL THE PROJECTS TO A MINIMUM. THE CONTRACTORS SHALL INFORM EACH OTHER OF PROGRESS OF THE PROJECTS AND GIVE FAIR WARNING TO THE OTHER CONTRACTORS WHEN A PROBLEM MIGHT BE ENCOUNTERED.

THE CONTRACTOR SHALL BE RESPONSIBLE FOR PROTECTING UTILITY PROPERTY DURING CONSTRUCTION OPERATIONS AS OUTLINED IN ARTICLE 107.31 OF THE STANDARD SPECIFICATIONS. A MINIMUM OF 48 HOURS ADVANCE NOTICE IS REQUIRED FOR NON-EMERGENCY WORK. THE JULIE NUMBER IS 800-892-0123. THE FOLLOWING LISTED UTILITIES LOCATED WITHIN THE PROJECT LIMITS OR IMMEDIATELY ADJACENT TO THE PROJECT CONSTRUCTION LIMITS ARE MEMBERS OF JULIE:

COMMONWEALTH EDISON - MR. MIKE LENOX	(815) 490-2869
VERIZON - MR. KALIN HINSHAW	(815) 895-1515
NICOR GAS CO. - MS. CONSTANCE LANE	(630) 983-8676
MEDIA COM - MR. MATT FORGAS	(630) 365-0045
VILLAGE OF DURAND (WATER & SEWER) - MR. MIKE SWEET	(815) 248-2201

THE APPLICABLE PORTIONS OF ARTICLE 105.07 OF THE STANDARD SPECIFICATION SHALL APPLY EXCEPT FOR THE FOLLOWING: THE CONTRACTOR SHALL BE RESPONSIBLE TO LOCATE THE VERTICAL DEPTHS OF THE UNDERGROUND UTILITIES WHICH MAY INTERFERE WITH CONSTRUCTION OPERATIONS. THIS WORK WILL NOT BE MEASURED OR PAID FOR SEPARATELY, BUT SHALL BE CONSIDERED AS INCLUDED IN THE UNIT BID PRICE FOR THE ITEM OF CONSTRUCTION INVOLVED.

PER SB 699 (90 DAY UTILITY RELOCATION LAW), ONCE RIGHT-OF-WAY IS CLEAR TO AWARD THE PROJECT, A NOTICE WILL BE SENT TO THE UTILITY COMPANIES INSTRUCTING THEM TO HAVE THEIR FACILITIES RELOCATED WITHIN 90 DAYS. ESTIMATED DATE RELOCATION COMPLETE = LETTING DATE + 135 DAYS.

CADD DATA WILL BE AVAILABLE TO CONTRACTORS AND CONSULTANTS WORKING ON THIS PROJECT. THIS INFORMATION WILL BE PROVIDED UPON REQUEST AS MICROSTATION CADD FILES AND GEOPAK COORDINATE GEOMETRY FILES ONLY. IF DATA IS REQUIRED IN OTHER FORMATS IT WILL BE YOUR RESPONSIBILITY TO MAKE THESE CONVERSIONS. IF ANY DISCREPANCY OR INCONSISTENCY ARISES BETWEEN THE ELECTRONIC DATA AND THE INFORMATION ON THE HARD COPY, THE INFORMATION ON THE HARD COPY SHOULD BE USED. CONTACT THE DISTRICT'S PROJECT ENGINEER TO REQUEST THESE FILES.

THE CONTRACTOR SHALL SUBMIT A DEMOLITION PLAN TO THE ENGINEER FOR APPROVAL PRIOR TO CONSTRUCTION.

ALL TREES REMOVED FROM THE PROJECT AREA (3 TREES, MAX.) FOR CONSTRUCTION OR MAINTENANCE PURPOSES
WILL BE REPLACED WITH DECIDUOUS TREE SPECIES WHICH ARE NATIVE TO THE DISTRICT 2 AREA. TREES WILL BE
REPLACED ACCORDING TO IDOT DEPARTMENTAL POLICY D&E-18 (SEPTEMBER 18, 2002). THE LOCATION OF THE
REPLACEMENT TREES SHALL BE DETERMINED BY DISTRICT 2 LANDSCAPE ARCHITECT.

SUMMARY OF QUANTITIES

	CODE	ITEM	UNIT	TOTAL QUANTITY	ROADWAY QUANTITY 80% FEDERAL 20% STATE I000	BRIDGE QUANTITY 80% FEDERAL 20% STATE X020-2A
	20100110	TREE REMOVAL (6 TO 15 UNITS DIAMETER)	UNIT	24	24	
	20100210	TREE REMOVAL (OVER 15 UNITS DIAMETER)	UNIT	18	18	
	20200100	EARTH EXCAVATION	CU YD	2,200	2,200	
	20700400	POROUS GRANULAR EMBANKMENT, SPECIAL	CU YD	50		50
*	25000100	SEEDING, CLASS 1	ACRE	0.25	0.25	
*	25000210	SEEDING, CLASS 2A	ACRE	0.75	0.75	
*	25000310	SEEDING, CLASS 4	ACRE	0.75	0.75	
† *	25000750	MOWING	ACRE	1.5	1.50	
*	25100115	MULCH, METHOD 2	ACRE	0.50	0.50	
*	25100630	EROSION CONTROL BLANKET	SQ YD	4,647	4,647	
	28000250	TEMPORARY EROSION CONTROL SEEDING	POUND	552	552	
	28000305	TEMPORARY DITCH CHECKS	FOOT	105	105	
	28000400	PERIMETER EROSION BARRIER	FOOT	718	718	
	28000500	INLET AND PIPE PROTECTION	EACH	3	3	
	28100109	STONE RIPRAP, CLASS A5	SQ YD	712		712
	28200200	FILTER FABRIC	SQ YD	712		712
	31100965	SUB-BASE GRANULAR MATERIAL, TYPE A 24"	SQ YD	2,528	2,528	
	35101400	AGGREGATE BASE COURSE, TYPE B	TON	93	93	
	40201000	AGGREGATE FOR TEMPORARY ACCESS	TON	273	273	
	40600990	TEMPORARY RAMP	SQ YD	874	874	
	40603080	HOT-MIX ASPHALT BINDER COURSE, IL-19.0, N50	TON	1,144	1,144	
	40603335	HOT-MIX ASPHALT SURFACE COURSE, MIX "D", N50	TON	230	230	
	40800050	INCIDENTAL HOT-MIX ASPHALT SURFACING	TON	22	22	
	42001300	PROTECTIVE COAT	SQ YD	678	678	
	42300300	PORTLAND CEMENT CONCRETE DRIVEWAY PAVEMENT, 7 INCH	SQ YD	254	254	

SUMMARY OF QUANTITIES

CODE	ITEM	UNIT	TOTAL QUANTITY	ROADWAY QUANTITY 80% FEDERAL 20% STATE I000	BRIDGE QUANTITY 80% FEDERAL 20% STATE X020-2A
44000100	PAVEMENT REMOVAL	SQ YD	2,176	2,176	
44000600	SIDEWALK REMOVAL	SQ FT	62	62	
48100100	AGGREGATE SHOULDERS, TYPE A	TON	36	36	
50105200	REMOVE EXISTING CULVERTS	EACH	1	1	
50100300	REMOVAL OF EXISTING STRUCTURES NO. 1	EACH	1		1
50200100	STRUCTURE EXCAVATION	CU YD	65		65
50300100	FLOOR DRAINS	EACH	8		8
50300225	CONCRETE STRUCTURES	CU YD	97.4		97.4
50300255	CONCRETE SUPERSTRUCTURE	CU YD	285.5		285.5
50300260	BRIDGE DECK GROOVING	SQ YD	534		534
50300280	CONCRETE ENCASEMENT	CU YD	8.7		8.7
50300300	PROTECTIVE COAT	SQ YD	755		755
50800515	BAR SPLICERS	EACH	396		396
50800205	REINFORCEMENT BARS, EPOXY COATED	POUND	81,240		81,240
50901720	BICYCLE RAILING	FOOT	128		128
50901750	PARAPET RAILING	FOOT	128		128
51201600	FURNISHING STEEL PILES HP12X53	FOOT	1,508		1,508
51202305	DRIVING PILES	FOOT	1,508		1,508
51203600	TEST PILE STEEL HP12X53	EACH	2		2
51205200	TEMPORARY SHEET PILING	SQ FT	496		496
51500100	NAME PLATES	EACH	1		1
542D0223	PIPE CULVERTS, CLASS D, TYPE 1 18"	FOOT	158	158	
54213453	END SECTIONS 18"	EACH	4	4	
54213657	PRECAST REINFORCED CONCRETE FLARED END SECTIONS 12"	EACH	5	5	
54213669	PRECAST REINFORCED CONCRETE FLARED END SECTIONS 24"	EACH	1	1	

† NON-PARTICIPATING
* SPECIALTY ITEMS

HOH — HARRY O. HOFFER-ASSOCIATES, INC. DESIGN AND CONSULTING ENGINEERS — 55 East Jackson Blvd. Suite 600 Chicago, Il 60604 312-346-5131 — PROJECT NUMBER 2944

FILE NAME = C:\Documents and Settings\condermance\Local Settings\Temporary Internet Files\Content.Outlook\PURBVHIO\AAF207scq (2).dgn	USER NAME = condermance	DESIGNED - AAF	REVISED -
	PLOT SCALE = 20.0000 ' / IN.	DRAWN - AAF	REVISED -
	PLOT DATE = Wed Dec 02 14:27:36 2009	CHECKED - BAP	REVISED -
		DATE - Wed Dec 02 14:27:36 2009	REVISED -

STATE OF ILLINOIS
DEPARTMENT OF TRANSPORTATION

IL. ROUTE 70 OVER OTTER CREEK
SUMMARY OF QUANTITIES

SCALE: NONE | SHEET NO. 1 OF 2 SHEETS | STA. N/A | TO STA. N/A

F.A.P RTE.	SECTION	COUNTY	TOTAL SHEETS	SHEET NO.
55	(W-1-15d)BR-1	WINNEBAGO	59	4
		CONTRACT NO. 64D22		

FED. ROAD DIST. NO. | ILLINOIS | FED. AID PROJECT

S001

SUMMARY OF QUANTITIES

CODE	ITEM	UNIT	TOTAL QUANTITY	ROADWAY QUANTITY 80% FEDERAL 20% STATE I000	BRIDGE QUANTITY 80% FEDERAL 20% STATE X020-2A
550A0050	STORM SEWERS, CLASS A, TYPE 1 12"	FOOT	179	179	
550A0120	STORM SEWERS, CLASS A, TYPE 1 24"	FOOT	55	55	
56109210	WATER VALVES TO BE ADJUSTED	EACH	2	2	
59100100	GEOCOMPOSITE WALL DRAIN	SQ YD	81		81
60107600	PIPE UNDERDRAINS 4"	FOOT	60	60	
60109580	PIPE UNDERDRAINS FOR STRUCTURES 4"	FOOT	150		150
60218400	MANHOLES, TYPE A, 4'-DIAMETER, TYPE 1 FRAME, CLOSED LID	EACH	1	1	
60242400	INLETS, SPECIAL	EACH	2	2	
60242801	INLETS, SPECIAL, NO. 5	EACH	4	4	
60255500	MANHOLES TO BE ADJUSTED	EACH	2	2	
60600095	CLASS SI CONCRETE (OUTLET)	CU YD	5.0	5.0	
60605000	COMBINATION CONCRETE CURB AND GUTTER, TYPE B-6.24	FOOT	1,404	1,404	
63100085	TRAFFIC BARRIER TERMINAL, TYPE 6	EACH	4	4	
63100167	TRAFFIC BARRIER TERMINAL, TYPE 1 (SPECIAL) TANGENT	EACH	4	4	
63200310	GUARDRAIL REMOVAL	FOOT	395	395	
63300705	RUB RAIL	FOOT	192	192	
63500105	DELINEATORS	EACH	8	8	
66411900	TEMPORARY FENCE	FOOT	597	597	
66700305	PERMANENT SURVEY MARKERS, TYPE II	EACH	3	3	
67000400	ENGINEER'S FIELD OFFICE, TYPE A	CAL MO	8	8	
67100100	MOBILIZATION	L SUM	1	1	
70100405	TRAFFIC CONTROL AND PROTECTION, STANDARD 701321	EACH	1	1	
70100500	TRAFFIC CONTROL AND PROTECTION, STANDARD 701326	L SUM	1	1	
70102620	TRAFFIC CONTROL AND PROTECTION, STANDARD 701501	L SUM	1	1	
70102640	TRAFFIC CONTROL AND PROTECTION, STANDARD 701801	L SUM	1	1	

SUMMARY OF QUANTITIES

	CODE	ITEM	UNIT	TOTAL QUANTITY	ROADWAY QUANTITY 80% FEDERAL 20% STATE I000	BRIDGE QUANTITY 80% FEDERAL 20% STATE X020-2A
	70103815	TRAFFIC CONTROL SURVEILLANCE	CAL DA	5	5	
	70106500	TEMPORARY BRIDGE TRAFFIC SIGNALS	EACH	1	1	
	70300100	SHORT-TERM PAVEMENT MARKING	FOOT	284	284	
	70300625	TEMPORARY PAINT PAVEMENT MARKING LINE 4"	FOOT	4,745	4,745	
	70300660	TEMPORARY PAINT PAVEMENT MARKING LINE 24"	FOOT	63	63	
	70301000	WORK ZONE PAVEMENT MARKING REMOVAL	SQ FT	1,133	1,133	
	70400100	TEMPORARY CONCRETE BARRIER	FOOT	1,088	1,088	
	70400200	RELOCATE TEMPORARY CONCRETE BARRIER	FOOT	1,063	1,063	
*	78001110	PAINT PAVEMENT MARKING - LINE 4"	FOOT	11,592	11,592	
*	78001180	PAINT PAVEMENT MARKING - LINE 24"	FOOT	74	74	
*	78100100	RAISED REFLECTIVE PAVEMENT MARKER	EACH	11	11	
*	78200410	GUARDRAIL MARKERS, TYPE A	EACH	4	4	
*	78200520	BARRIER WALL MARKERS, TYPE B	EACH	4	4	
*	78201000	TERMINAL MARKER - DIRECT APPLIED	EACH	4	4	
	78300100	PAVEMENT MARKING REMOVAL	SQ FT	198	198	
*	A2006514	TREE, QUERCUS BICOLOR (SWAMP WHITE OAK), 1-3/4" CALIPER, BALLED AND BURLAPPED	EACH	3	3	
	X0712400	TEMPORARY PAVEMENT	SQ YD	404	404	
	X0919000	TEMPORARY PAVEMENT REMOVAL	SQ YD	404	404	
	X5020501	UNDERWATER STRUCTURE EXCAVATION PROTECTION - LOCATION 1	EACH	1		1
	Z0030250	IMPACT ATTENUATORS, TEMPORARY (NON- REDIRECTIVE), TEST LEVEL 3	EACH	2	2	
	Z0030350	IMPACT ATTENUATORS, RELOCATE (NON- REDIRECTIVE), TEST LEVEL 3	EACH	2	2	
	Z0013798	CONSTRUCTION LAYOUT	L SUM	1	1	

△ NON-PARTICIPATING
* SPECIALTY ITEMS

FILE NAME = C:\Documents and Settings\condermance\Local Settings\Temporary Internet Files\Content.Outlook\PUR8VH10\AF5207soq (2).dgn

USER NAME = condermance
PLOT SCALE = 20.0000 ' / IN.
PLOT DATE = Wed Dec 02 14:27:59 2009

DESIGNED - AAF
DRAWN - BAP
CHECKED - BAP
DATE - Wed Dec 02 14:27:59 2009

REVISED -
REVISED -
REVISED -
REVISED -

STATE OF ILLINOIS
DEPARTMENT OF TRANSPORTATION

IL. ROUTE 70 OVER OTTER CREEK
SUMMARY OF QUANTITIES

SCALE: NONE | SHEET NO. 2 OF 2 SHEETS | STA. N/A | TO STA. N/A

HOH — HARRY O. HEFTER-ASSOCIATES, INC. DESIGN AND CONSULTING ENGINEERS — 55 East Jackson Blvd. Suite 660 Chicago, Il 60604 312-345-0131

PROJECT NUMBER 2944

F.A.P RTE.	SECTION	COUNTY	TOTAL SHEETS	SHEET NO.
55	(W-1-15d)BR-1	WINNEBAGO	59	5

CONTRACT NO. 64D22

FED. ROAD DIST. NO. | ILLINOIS | FED. AID PROJECT

SCHEDULE OF QUANTITES

EARTHWORK SCHEDULE

LOCATION			EARTH EXCAVATION	EARTH EXCAVATION EXCAVATION (ADJ. FOR 25% SHRINK)	EMBANKMENT	EARTHWORK BALANCE WASTE (+) OR SHORTAGE (-)
STATION	TO	STATION	CU YD	CU YD	CU YD	CU YD
57+65	TO	61+00	884	663	447	216
61+00	TO	62+20	323	242	224	18
62+88	TO	66+00	993	745	560	185
		TOTALS	2,200	1,650	1,231	419

ROADWAY PAVEMENT SCHEDULE

ROADWAY PAVEMENT SCHEDULES					40603335 HMA SURF. CSE. MIX D, N 50	40603080 HMA BIND. CSE. IL 19.0, N50	31100965 SUB-BASE GRAN. MAT. TYPE A, 24"
LOCATION					WEIGHT	WEIGHT	AREA
STATION	TO	STATION	OFFSET	DESCRIPTION	(TONS)	(TONS)	(SQ YD)
57 + 65	TO	61 + 90	LT	LEFT LANE	69	344	760
57 + 65	TO	61 + 90	RT	RIGHT LANE	69	344	760
63 + 18	TO	66 + 00	LT	LEFT LANE	46	228	504
63 + 18	TO	66 + 00	RT	RIGHT LANE	46	228	504
				TOTAL	230	1,144	2,528

CURB & GUTTER SCHEDULE

CURB & GUTTER SCHEDULES				60605000 CONCRETE CURB & GUTTER TYPE B-6.24	60600095 CLASS SI CONCRETE (OUTLET)	42001300 PROTECTIVE COAT
LOCATION				LENGTH	VOLUME	AREA
STATION	TO	STATION	OFFSET	(FOOT)	(CU YD)	(SQ YD)
57 + 57	TO	57 + 69	LT		1.23	5.3
57 + 65	TO	57 + 77	RT		1.23	5.3
57 + 69	TO	61 + 91	LT	421.5		120.8
57 + 77	TO	61 + 91	RT	413.5		118.5
63 + 18	TO	66 + 17	LT	299		85.7
63 + 18	TO	65 + 88	RT	270		77.4
66 + 17	TO	66 + 29	LT		1.23	5.3
65 + 88	TO	66 + 00	RT		1.23	5.3
			TOTAL	1,404	5.0	424

DRIVEWAY SCHEDULE

DRIVEWAY SCHEDULE			35101400 AGG. BASE COURSE TYPE B	40800050 INCIDENTAL HMA SURF.	42300300 PCC CONC DRIVEWAY, 7"	42001300 PROTECTIVE COAT
LOCATION			WEIGHT	WEIGHT	AREA	AREA
STATION	OFFSET	DESCRIPTION	(TONS)	(TONS)	(SQ YD)	(SQ YD)
57 + 87	LT	PE	19.0	5.1	43.6	43.6
58 + 41	LT	PE & MAILBOX RETURN	41.0	11.6	51.4	51.4
64 + 58	RT	FE	12.2		37.0	37.0
64 + 66	LT	PE & MAILBOX RETURN	14.9	3.9	98.10	98.1
65 + 13	RT	PE	5.3	1.4	24.2	24.2
		TOTAL	93	22	254	254

LANDSCAPING SCHEDULE

LANDSCAPING SCHEDULES				25000100 SEEDING CLASS 1 (ACRES)	25000210 SEEDING CLASS 2A (ACRES)	25000310 SEEDING CLASS 4 (ACRES)	28000250 TEMPORARY E.C. SEEDING (POUNDS)	25100115 MULCH METHOD 2 (ACRE)	25100630 EROSION CONTROL BLANKET (SQ YD)	25000750 MOWING (ACRE)
LOCATION										
STATION	TO	STATION	OFFSET							
57 + 65	TO	62 + 52	LT	0.06	0.22	0.12	160	0.22	871	0.40
57 + 51	TO	62 + 56	RT		0.17	0.22	156	0.04	1694	0.39
62 + 75	TO	66 + 00	LT		0.19	0.19	152	0.06	1549	0.38
62 + 75	TO	66 + 00	RT	0.07	0.06	0.08	84	0.10	532	0.21
			TOTAL	0.13	0.64	0.61	552	0.42	4,647	1.38

NOTES:

1. FERTILIZER IS INCLUDED IN THE COST OF SEEDING, SEE GENERAL NOTES.

SCHEDULE OF QUANTITES

DRAINAGE STRUCTURE SCHEDULE

STRUCTURE SCHEDULE

TAG	RIM ELEV.	STA.	OFFSET	STRU. DESC.	FRAME & LID TYPE	PIPE CONNECTIONS NORTH DIA.	NORTH INVERT	SOUTH DIA.	SOUTH INVERT	EAST DIA.	EAST INVERT	WEST DIA.	WEST INVERT	COMMENTS
DRAINAGE STRUCTURES														
100	765.93	59+65	16' LT	INLET SPECIAL, NO 5								12"	765.50	
101	765.89	59+80	16' LT	INLET SPECIAL, NO 5								12"	765.50	
102	765.93	59+65	16' RT	INLET SPECIAL, NO 5						12"	765.20	12"	765.10	
103	765.89	59+80	16' RT	INLET SPECIAL, NO 5						12"	765.20	12"	765.10	
104		59+65	30' RT	12" CONC. FLARED END SECTION								12"	762.59	
105		59+80	30' RT	12 "CONC. FLARED END SECTION						12"	762.83			
106	766.15	61+75	28' LT	MH, TYPE A, 4' DIA	TYPE 1,CL	24"	759.35	24"	759.25					REDIRECT EXIST. SEWER
107		62+28	42' LT	24" CONC. FLARED END SECTION		24"	759.00							REDIRECT EXIST. SEWER
108	766.72	63+30	13' LT	INLET, SPECIAL						12"	763.70			
109	766.72	63+30	13' RT	INLET, SPECIAL								12"	763.70	
110		63+30	52' LT	12" CONC. FLARED END SECTION								12"	761.80	
111		63+30	37' RT	12" CONC. FLARED END SECTION						12"	761.80			
112		64+52	44' LT	18" END SECTION				18"	766.27					AT DRIVEWAY CULVERT
113		64+78	44' LT	18" END SECTION		18"	767.15							AT DRIVEWAY CULVERT
114		64+38	28' RT	18" END SECTION				18"	766.5					AT DRIVEWAY CULVERT
115		65+70	24' RT	18" END SECTION		18"	771.41							AT DRIVEWAY CULVERT

NOTE: A 12" CONC. FLARED END SECTION HAS BEEN ADDED TO THE SUMMARY OF QUANTITIES TO BE USED AS A CONTINGENCY ITEM FOR THE 12" PVC STORM PIPE LOCATED AT STA. 62+47, 62' RT.

PIPE SCHEDULE

PIPE SCHEDULE

TAG	FROM	TO	LENGTH (FOOT)	DIA.	TYPE	SLOPE (%)
STORM SEWER						
1	100	102	34	12"	STORM SEWER, CL A, TYPE 1	1.0%
2	101	103	34	12"	STORM SEWER, CL A, TYPE 1	1.0%
3	102	104	14	12"	STORM SEWER, CL A, TYPE 1	7.4%
4	103	105	14	12"	STORM SEWER, CL A, TYPE 1	6.7%
5	106	107	55	24"	STORM SEWER, CL A, TYPE 1	0.5%
6	108	110	39	12"	STORM SEWER, CL A, TYPE 1	4.9%
7	109	111	24	12"	STORM SEWER, CL A, TYPE 1	7.9%
8	112	113	26	18"	CULVERT, CL D, TYPE 1	3.4%
9	114	115	132	18"	CULVERT, CL D, TYPE 1	5.1%

NOTE: 20 FEET OF 12" STORM SEWER, CL A, TYPE 1 HAS BEEN ADDED TO THE SUMMARY OF QUANTITIES TO BE USED AS A CONTINGENCY ITEM FOR THE 12" PVC STORM PIPE LOCATED AT STA. 62+47, 62' RT.

20100110 TREE REMOVAL (6 TO 15 UNITS DIAMETER)

UNITS	LOCATION	OFFSET	REMARKS
12	64+92	36' LT	
12	64+93	43' LT	
24	TOTAL		

20100210 TREE REMOVAL (OVER 15 UNITS DIAMETER)

UNITS	LOCATION	OFFSET	REMARKS
18	65+71	34' LT	
18	TOTAL		

28000305 TEMPORARY DITCH CHECKS

FOOT	LOCATION	OFFSET	REMARKS
17.5	58+28	RT	
17.5	60+28	RT	
17.5	62+28	RT	
17.5	62+97	LT	
17.5	62+98	RT	
17.5	64+97	LT	
105	TOTAL		

28000400 PERIMETER EROSION BARRIER

FOOT	LOCATION			OFFSET	REMARKS
27	57+66	TO	57+79	LT	
425	57+98	TO	62+50	LT	
166	62+82	TO	64+48	RT	
30	64+72	TO	65+02	RT	
34	65+24	TO	65+58	RT	
36	65+64	TO	66+00	RT	
718	TOTAL				

28000500 INLET AND PIPE PROTECTION

EACH	LOCATION	OFFSET	REMARKS
1	64+82	26' LT	
1	64+75	23' RT	
1	65+28	24' RT	
3	TOTAL		

40201000 AGGREGATE FOR TEMPORARY ACCESS

TONS	LOCATION			OFFSET	REMARKS
106	64+50	TO	66+00	RT	STAGE 1
84	57+65	TO	58+50	LT	STAGE 2
83	64+60	TO	66+00	LT	STAGE 2
273	TOTAL				

40600990 TEMPORARY RAMP

SQ YD	LOCATION			OFFSET	REMARKS
497	57+65	TO	61+91	RT	STAGE 2 ALONG GUTTER
329	63+18	TO	66+00	RT	STAGE 2 ALONG GUTTER
12	57+65			LT	STAGE 3 PRIOR TO SURFACE COURSE
12	61+91			LT	STAGE 3 PRIOR TO SURFACE COURSE
12	63+18			LT	STAGE 3 PRIOR TO SURFACE COURSE
12	66+00			LT	STAGE 3 PRIOR TO SURFACE COURSE
874	TOTAL				

44000100 PAVEMENT REMOVAL

SQ YD	LOCATION			OFFSET	REMARKS
660	57+65	TO	62+25	LT	
660	57+65	TO	62+25	RT	
428	63+06	TO	66+00	LT	
428	63+06	TO	66+00	RT	
2,176	TOTAL				

44000600 SIDEWALK REMOVAL

SQ FT	LOCATION			OFFSET	REMARKS
45	57+94	TO	58+08	LT	
17	65+61	TO	65+63	RT	
62	TOTAL				

48100100 AGGREGATE SHOULDERS, TYPE A

TON	LOCATION			OFFSET	REMARKS
8.8	56+65	TO	57+58	LT	PLACE WHERE TEMP PAVEMENT WAS REMOVED
9.5	56+65	TO	57+65	RT	PLACE WHERE TEMP PAVEMENT WAS REMOVED
7.7	66+29	TO	67+10	LT	PLACE WHERE TEMP PAVEMENT WAS REMOVED
9.5	66+00	TO	67+00	RT	PLACE WHERE TEMP PAVEMENT WAS REMOVED
36	TOTAL				

50105200 REMOVE EXISTING CULVERTS

EACH	LOCATION	OFFSET	REMARKS
1	65+13	RT	INCLUDES HEADWALL REMOVAL (2 EACH)
1	TOTAL		

56109210 WATER VALVES TO BE ADJUSTED

EACH	LOCATION	OFFSET	REMARKS
1	60+88	47' LT	
1	65+12	28' LT	
2	TOTAL		

60107600 PIPE UNDERDRAINS 4"

FOOT	LOCATION	OFFSET	REMARKS
16	59+80	LT	
16	59+80	RT	
14	63+30	LT	
14	63+30	RT	
60	TOTAL		

60255500 MANHOLES TO BE ADJUSTED

EACH	LOCATION	OFFSET	REMARKS
1	58+61	28' LT	
1	60+17	28' LT	
2	TOTAL		

63100085 TRAFFIC BARRIER TERMINAL, TYPE 6

EACH	LOCATION			OFFSET	REMARKS
1	61+45	TO	61+90	LT	
1	61+59	TO	62+05	RT	
1	63+18	TO	63+64	LT	
1	63+03	TO	63+49	RT	
4	TOTAL				

63100167 TRAFFIC BARRIER TERMINAL, TYPE 1 (SPECIAL) TANGENT

EACH	LOCATION			OFFSET	REMARKS
1	60+95	TO	61+45	LT	
1	61+09	TO	61+59	RT	
1	63+64	TO	64+14	LT	
1	63+49	TO	63+99	RT	
4	TOTAL				

63200310 GUARDRAIL REMOVAL

FOOT	LOCATION			OFFSET	REMARKS
98	61+27	TO	62+25	LT	
99	61+26	TO	62+25	RT	
99	63+06	TO	64+05	LT	
99	63+06	TO	64+05	RT	
395	TOTAL				

63300705 RUB RAIL

FOOT	LOCATION			OFFSET	REMARKS
96	60+95	TO	61+90	LT	
96	63+18	TO	64+14	LT	
192	TOTAL				

63500105 DELINEATORS

EACH	LOCATION	OFFSET	REMARKS
1	57+55	LT	C&G INLET
1	57+65	RT	C&G INLET
1	60+94	LT	GUARDRAIL TERMINAL
1	61+08	RT	GUARDRAIL TERMINAL
1	64+00	RT	GUARDRAIL TERMINAL
1	64+13	LT	GUARDRAIL TERMINAL
1	66+01	LT	C&G INLET
1	66+02	RT	C&G INLET
8	TOTAL		

66411900 TEMPORARY FENCE

FOOT	LOCATION			OFFSET	REMARKS
479	57+66	TO	62+45	RT	PLACE ALONG TEMP. ESMT WITHIN SCHOOL PROPERTY
118	62+82	TO	64+00	RT	PLACE ALONG TEMP. ESMT WITHIN SCHOOL PROPERTY
597	**TOTAL**				

66700305 PERMANENT SURVEY MARKERS, TYPE II

EACH	LOCATION	OFFSET	REMARKS
1	57+60		EXACT LOCATION TBD BY RESIDENT ENGINEER
1	BRIDGE		EXACT LOCATION TBD BY RESIDENT ENGINEER
1	66+00		EXACT LOCATION TBD BY RESIDENT ENGINEER
3	**TOTAL**		

70300100 SHORT-TERM PAVEMENT MARKING

FOOT	LOCATION			OFFSET	REMARKS
284	54+74	TO	68+91		2 APPLICATIONS
284	**TOTAL**				

70300625 TEMPORARY PAINT PAVEMENT MARKING - LINE 4"

FOOT	LOCATION			OFFSET	REMARKS
1364	54+69	TO	68+33	LT	STAGE 1, WHITE LEFT EDGE
1040	56+61	TO	67+01	RT/LT	STAGE 1, WHITE RIGHT EDGE
1329	55+45	TO	68+74	RT/LT	STAGE 2, WHITE LEFT EDGE
1012	56+75	TO	66+87	LT	STAGE 2, WHITE RIGHT EDGE
4,745	**TOTAL**				

70300660 TEMPORARY PAINT PAVEMENT MARKING - LINE 24"

FOOT	LOCATION			OFFSET	REMARKS
13	53+73			RT	USE FOR STAGES 1&2
17	53+92	TO	54+09	LT	USE FOR STAGES 1&2 @ SOUTH ST.
20	54+09	TO	55+29	RT	USE FOR STAGES 1&2 @ SOUTH ST.
13	68+97			LT	USE FOR STAGES 1&2
63	**TOTAL**				

70301000 WORK ZONE PAVEMENT MARKING REMOVAL

SQ FT	LOCATION			OFFSET	REMARKS
35	56+61	TO	57+65	LT LINE	STAGE 1, LEFT EDGE LINE
99	54+69	TO	57+65	RT LINE	STAGE 1, RIGHT EDGE LINE
34	66+00	TO	67+01	LT LINE	STAGE 1, LEFT EDGE LINE
78	66+00	TO	68+33	RT LINE	STAGE 1, RIGHT EDGE LINE
443	55+45	TO	68+74	LT LINE	STAGE 2, LEFT EDGE LINE
333	56+75	TO	66+75	RT LINE	STAGE 2, RIGHT EDGE LINE
48	54+69	TO	68+75	CENTER	STOP BAR
13	53+74			LT	STOP BAR
17	53+92	TO	54+09	LT	SOUTH ST. STOP BAR
20	54+09	TO	55+29	RT	SOUTH ST. STOP BAR
13	68+97			RT LINE	SHORT TERM PAVEMENT MARKINGS ON TOP LIFT
1,133	**TOTAL**				

70400100 TEMPORARY CONCRETE BARRIER

FOOT	LOCATION			OFFSET	REMARKS
1087.5	56+37.5	TO	67+25.0		STAGE 1 MOT
1,087.5	**TOTAL**				

70400200 RELOCATE TEMPORARY CONCRETE BARRIER

FOOT	LOCATION			OFFSET	REMARKS
1062.5	56+50.0	TO	67+12.5		STAGE 2 MOT
1,062.5	**TOTAL**				

78001110 PAINT PAVEMENT MARKING - LINE 4"

FOOT	LOCATION			OFFSET	REMARKS
2728	54+69	TO	68+33	LT	WHITE EDGE LINE-2 APPLICATIONS
2728	54+69	TO	68+33	RT	WHITE EDGE LINE-2 APPLICATIONS
5456	54+69	TO	68+33	CENTER	DOUBLE YELLOW-2 APPLICATIONS
680	54+69	TO	68+33	CENTER	SKIP DASH-YELLOW-2 APPLICATIONS
11,592	**TOTAL**				

78001180 PAINT PAVEMENT MARKING - LINE 24"

FOOT	LOCATION			OFFSET	REMARKS
34	53+92	TO	54+09	LT	WHITE STOP BAR @ SOUTH ST.-2 APPLICATIONS
40	54+09	TO	54+29	RT	WHITE STOP BAR @ SOUTH ST.-2 APPLICATIONS
74	**TOTAL**				

78100100 RAISED REFLECTIVE PAVEMENT MARKER

EACH	LOCATION			OFFSET	REMARKS
11	57+65	TO	66+00		2 WAY AMBER 80' C-C
11	**TOTAL**				

78200410 GUARDRAIL MARKERS, TYPE A

EACH	LOCATION	OFFSET	REMARKS
1	61+60	RT	
1	61+70	LT	
1	63+40	RT	
1	62+50	LT	
4	**TOTAL**		

78200520 BARRIER WALL MARKERS, TYPE B

EACH	LOCATION	OFFSET	REMARKS
1	62+20	RT	
1	62+30	LT	
1	62+80	RT	
1	62+90	LT	
4	**TOTAL**		

78201000 TERMINAL MARKER - DIRECT APPLIED

EACH	LOCATION	OFFSET	REMARKS
1	60+95	LT	
1	61+09	RT	
1	64+14	LT	
1	63+99	RT	
4	**TOTAL**		

78300100 PAVEMENT MARKING REMOVAL

SQ FT	LOCATION			OFFSET	REMARKS
181	54+69	TO	57+40	CENTER	DOUBLE YELLOW CENTER LINE
17	66+25	TO	68+33	CENTER	SKIP-DASH YELLOW CENTER LINE
198	**TOTAL**				

X0712400 TEMPORARY PAVEMENT

SQ YD	LOCATION			OFFSET	REMARKS
192	56+50	TO	62+25	LT	STAGE 1
136	63+06	TO	67+10	LT	STAGE 1
38	56+65	TO	57+77	RT	STAGE 2
38	65+88	TO	67+00	RT	STAGE 2
404	**TOTAL**				

X0919000 TEMPORARY PAVEMENT REMOVAL

SQ YD	LOCATION			OFFSET	REMARKS
192	56+50	TO	62+25	LT	STAGE 1
136	63+06	TO	67+10	LT	STAGE 1
38	56+65	TO	57+77	RT	STAGE 2
38	65+88	TO	67+00	RT	STAGE 2
404	**TOTAL**				

Z0030250 IMPACT ATTENUATORS, TEMPORARY (NON-REDIRECTIVE), TEST LEVEL 3

EACH	LOCATION	OFFSET	REMARKS
1	56+37.5	RT	STAGE 1 MOT (USE NARROW DEVICE)
1	67+25	RT	STAGE 1 MOT (USE NARROW DEVICE)
2	**TOTAL**		

Z0030350 IMPACT ATTENUATORS, RELOCATE (NON-REDIRECTIVE), TEST LEVEL 3

EACH	LOCATION	OFFSET	REMARKS
1	56+50	LT	STAGE 2 MOT
1	67+12.5	LT	STAGE 2 MOT
2	**TOTAL**		

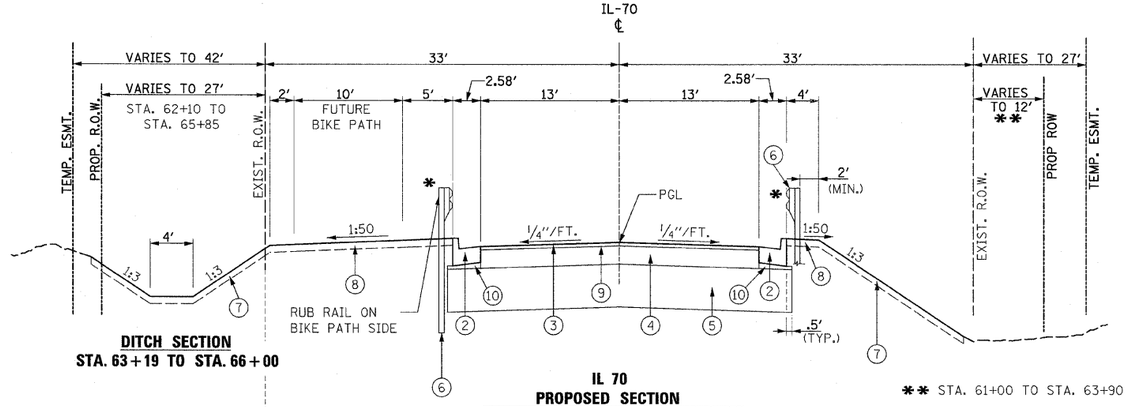

DITCH SECTION
STA. 63+19 TO STA. 66+00

IL 70
PROPOSED SECTION
STA. 57+65 TO STA. 61+90
STA. 63+18 TO STA. 66+00
BRIDGE OMISSION (STA. 61+90 TO STA. 63+18)
*** GUARDRAIL LIMITS**
STA. 60+94 TO STA. 64+14 RT.
STA. 61+09 TO STA. 63+99 LT

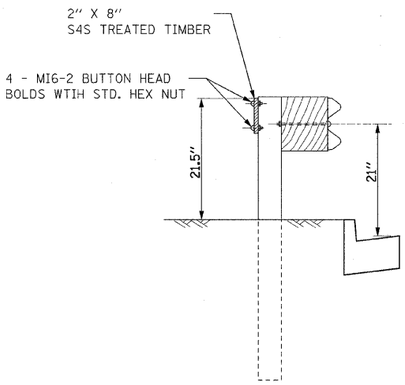

RUB RAIL DETAIL

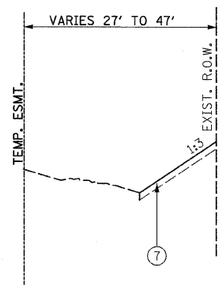

FILL SECTION
STA. 57+65 TO STA. 61+90

LEGEND

1. NOT USED
2. COMB. CONCRETE CURB & GUTTER, TYPE B-6.24
3. HMA SURFACE COURSE, MIX "D", N50 (2")
4. HMA BINDER COURSE, IL 19.0, N50 (10.25")
5. SUBBASE GRANULAR MATERIAL, TYPE A (24")
6. STEEL PLATE BEAM GUARDRAIL
7. SEEDING, FERTILIZER AND EROSION CONTROL BLANKET
8. SEEDING, FERTILIZER AND MULCH, METHOD 2
9. BITUMINOUS MATERIALS (PRIME COAT) (INCLUDED IN COST OF SURFACE COURSE)
10. CA6-CA10 (COST INCLUDED IN SUB-BASE GRANULAR MATERIAL, TYPE A)

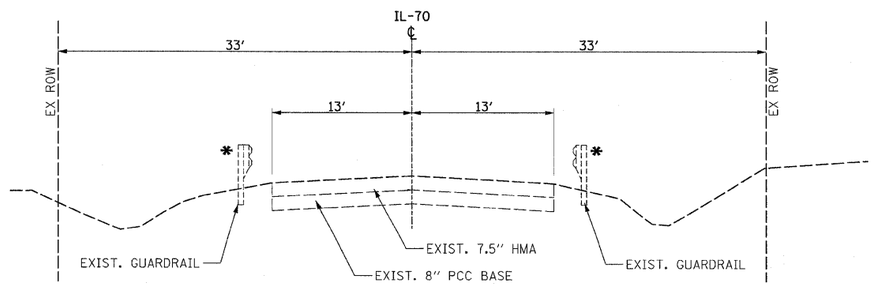

IL 70
EXISTING SECTION
STA. 57+65 TO STA. 66+00
*** STA. 61+26 TO STA. 64+05 (GUARDRAIL)**

FILE NAME = H:\Projects\2944\DGNS\Z06207TYP1.dgn	USER NAME = @USER@	DESIGNED -	REVISED -	STATE OF ILLINOIS DEPARTMENT OF TRANSPORTATION	IL 70 OVER OTTER CREEK TYPICAL SECTION				
		DRAWN -	REVISED -						
	PLOT SCALE = 6.667 ' / IN.	CHECKED -	REVISED -						
	PLOT DATE = 11/30/2009	DATE - 11/30/2009	REVISED -		SCALE: NONE	SHEET NO. 1 OF 1 SHEETS	STA. N/A	TO STA. N/A	

HOH — HARRY O. HEFTER-ASSOCIATES, INC. DESIGN AND CONSULTING ENGINEERS — 55 East Jackson Blvd. Suite 600 Chicago, Il 60604 312-346-4131 — PROJECT NUMBER 2944

F.A.P RTE.	SECTION	COUNTY	TOTAL SHEETS	SHEET NO.
55	(W-1-15d)BR-1	WINNEBAGO	59	10
		CONTRACT NO. 64D22		
FED. ROAD DIST. NO.	ILLINOIS	FED. AID PROJECT		

TYP1

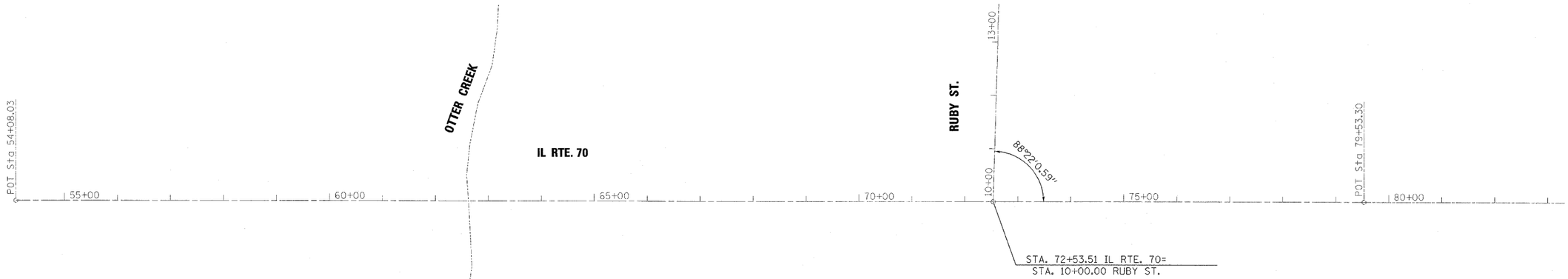

BENCH MARKS

POINT	NORTH	EAST	ELEVATION	CHAIN	STATION	OFFSET	DESCRIPTION
400	2098082.9958	2522126.5787	794.5820	IL70	89+12.5193	70.3488 LT	CONC TRANS PAD
401	2100506.3070	2522046.0570	772.4980	IL70	64+87.8720	67.8934 LT	ON CONC W SIDE SE OF BRIDGE LIFT STATION FOR SANITARY SEWER
402	2101014.6110	2522009.6346	763.8210	IL70	59+78.6588	47.8560 LT	ON W SIDE OF LIGHT BASE @ PARK LP
404	2099764.4506	2522398.9801	806.7610	IL70	72+40.7070	396.7476 LT	O IN OPEN ACROSS FROM HOUSE #14941 FIRE HYDRANT

REFERENCE TIES

POINT	CHAIN	STATION	OFFSET	DESCRIPTION
692	IL70	106+61.2556	25.4105' RT	HEADWALL
693	IL70	107+32.9979	110.4948' RT	POWER POLE, SHINER
694	IL70	107+38.7088	98.3867' LT	POWER POLE, SHINER
695	IL70	106+79.6116	483.0311' LT	POWER POLE, SHINER
696	IL70	107+46.8903	607.6618' LT	POWER POLE WITH TRANSFORMER, SHINER
697	IL70	106+85.1474	741.3398' LT	POWER POLE, SHINER
698	IL70	107+34.8355	438.9623' LT	POWER POLE, SHINER
699	IL70	107+35.3293	669.772' LT	POWER POLE WITH TRANSFORMER, SHINER

APPARENT PROPERTY CORNERS

POINT	NORTH	EAST	ELEVATION	CHAIN	STATION	OFFSET	DESCRIPTION
700	2096289.2178	2522113.9783	847.1878	IL70	107+04.9613	0.0520 RT	Desc=P.K. NAIL SECTION CORNER
702	2101583.3990	2521943.4305	769.0948	IL70	54+08.0343	0.0003 RT	Desc=NAIL SECTION CORNER
703	2099770.4086	2522747.9659	805.1500	IL70	72+45.9885	745.7443 LT	5/8 PIN
704	2099703.0605	2522621.2528	807.6600	IL70	73+09.2218	616.9284 LT	5/8 PIN BENT
705	2099701.6325	2522510.9139	807.0300	IL70	73+07.0965	506.6008 LT	5/8 PIN BENT
706	2099766.3648	2522398.0036	803.4700	IL70	72+38.7623	395.8332 LT	PIN
707	2099698.4525	2522218.5914	806.5200	IL70	73+00.8628	214.3274 LT	PIN
708	2099366.3268	2522046.6670	797.7722	IL70	76+27.2807	31.7986 LT	SURVEY NAIL
709	2099333.3600	2522048.3662	797.6143	IL70	76+60.2852	32.4354 LT	5/8 PIN
710	2099300.3843	2522050.0213	797.0480	IL70	76+93.2971	33.0279 LT	SURVEY NAIL
711	2098700.9518	2522069.2113	787.2739	IL70	82+93.0366	32.9078 LT	5/8 PIN

Chain IL70 contains:
1230 98 1220 S100

Beginning chain IL70 description
Feature: 111
==========

Point 1230 N 2,101,583.3988 E 2,521,943.4308 Sta 54+08.03

Course from 1230 to 98 S 1° 50' 42.36" E Dist 2,545.2669'

Point 98 N 2,099,039.4515 E 2,522,025.3820 Sta 79+53.30

Course from 98 to 1220 S 1° 50' 42.36" E Dist 2,746.6988'

Point 1220 N 2,096,294.1769 E 2,522,113.8188 Sta 107+00.00

Course from 1220 to S100 S 2° 26' 34.80" E Dist 2,055.1367'

Point S100 N 2,094,240.9080 E 2,522,201.4200 Sta 127+55.14

==========
Ending chain IL70 description

FILE NAME = H:\Projects\2944\DGNS\206207HVC1.dgn	USER NAME = $USER$	DESIGNED -	REVISED -
		DRAWN -	REVISED -
	PLOT SCALE = 100.0000 ' / IN.	CHECKED -	REVISED -
	PLOT DATE = 11/30/2009	DATE - 11/30/2009	REVISED -

STATE OF ILLINOIS
DEPARTMENT OF TRANSPORTATION

IL. ROUTE 70 OVER OTTER CREEK
EXISTING HORIZONTAL & VERTICAL CONTROL

SCALE: 1" = 100' | SHEET NO. 1 OF 2 SHEETS | STA. 57+65 TO STA. 66+00

HOH — HARRY O. HEFTER-ASSOCIATES, INC. DESIGN AND CONSULTING ENGINEERS — 55 East Jackson Blvd. Suite 800 Chicago, Il 60604 312-346-8131

PROJECT NUMBER 2944

F.A.P RTE.	SECTION	COUNTY	TOTAL SHEETS	SHEET NO.
55	(W-1-15d)BR-1	WINNEBAGO	59	11
		CONTRACT NO. 64D22		
FED. ROAD DIST. NO.	ILLINOIS	FED. AID PROJECT		

HVC1

HORIZONTAL CONTROL POINTS

POINT	NORTH	EAST	ELEVATION	CHAIN	STATION	OFFSET	DESCRIPTION
1052	2096779.2000	2522075.0100	830.9700	IL70	102+13.9788	23.1721' RT	WINNEBAGE CO. GPS MON. (108A)
1053	2096338.9330	2522718.9460	862.7730	IL70	106+74.7506	606.2545' LT	GPS CONTROL POINT, DISK
900143	2096323.8920	2522078.9520	844.6730	IL70	106+69.1776	33.8919' RT	GPS CONTROL POINT, PIN

SURVEY WORK POINTS

POINT	NORTH	EAST	ELEVATION	CHAIN	STATION	OFFSET	DESCRIPTION
100	2099680.7142	2521986.6755	797.6590	IL 70	73+11.1248	18.0394' RT	5/8 WITH CAP
101	2100554.9900	2521993.7400	768.0750	IL 70	64+37.5297	17.1710' LT	5/8 WITH CAP
102	2100983.4100	2521937.0300	763.3450	IL 70	60+07.5059	25.7156' RT	5/8 WITH CAP
103	2102048.0836	2521958.5778	771.1280	IL 70	OffChain	OffChain	5/8 WITH CAP
104	2101560.1052	2521973.9623	768.3510	IL 70	54+32.2988	29.7657' LT	SURVEY PK NAIL
105	2099759.7703	2522296.8645	805.4360	IL 70	72+42.0970	294.5342 LT	5/8 WITH CAP
106	2096294.3806	2522114.8102	847.3038	IL 70	106+99.8283	0.9975' LT	SURVEY PK NAIL
110	2100890.3085	2521697.4628	762.3469	IL 70	60+92.8457	268.1562' RT	GPS WP
111	2100878.0137	2521229.8749	762.7400	IL 70	60+90.0790	735.8975' RT	GPS WP

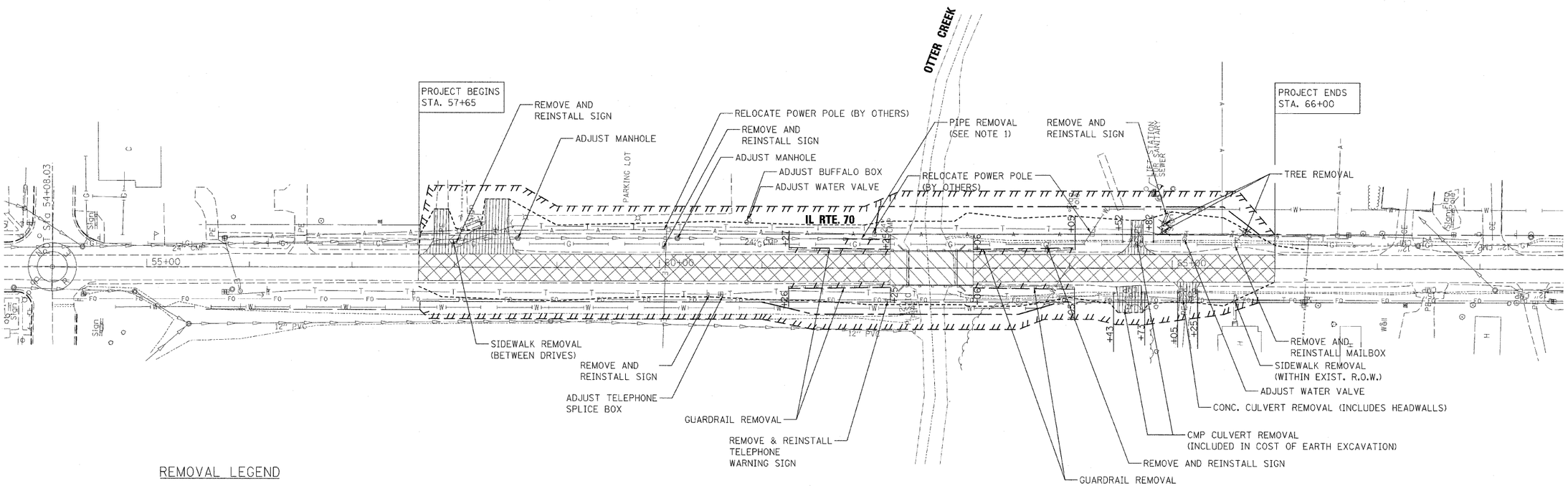

REMOVAL LEGEND

- PAVEMENT REMOVAL (HMA)
- SIDEWALK REMOVAL
- DRIVEWAY REMOVAL (INCLUDED IN EARTH EX.)
- BRIDGE WORK ZONE
- GUARDRAIL REMOVAL
- TREE REMOVAL

NOTES:

1. COST OF REMOVING THE EXISTING PIPE AND ANY MATERIAL MAKING THE CONNECTION WILL BE INCLUDED IN THE CONTRACT UNIT PRICE FOR THE VARIOUS ITEMS OF WORK.
2. THE COST OF REMOVING AND REINSTALLING SIGNS SHALL BE INCLUDED IN THE COST FOR EARTH EXCAVATION.
3. THE COST OF ADJUSTING BUFFALO BOX SHALL BE INCLUDED IN THE COST FOR VALVE VAULT ADJUSTMENT.

50 0 50 100 150 200 250
SCALE IN FEET

HARRY O. HEFTER-ASSOCIATES, INC.
DESIGN AND CONSULTING ENGINEERS
55 East Jackson Blvd. Suite 660 Chicago, Il 60604 312-346-8131

PROJECT NUMBER 2944

FILE NAME = H:\Projects\2944\DGNS\Z06207REM1.dgn	USER NAME = $USER$	DESIGNED -	REVISED -	STATE OF ILLINOIS DEPARTMENT OF TRANSPORTATION
		DRAWN -	REVISED -	
	PLOT SCALE = 50.0000 ' / IN.	CHECKED -	REVISED -	
	PLOT DATE = 11/30/2009	DATE - 11/30/2009	REVISED -	

IL. ROUTE 70 OVER OTTER CREEK
REMOVAL PLAN

SCALE: 1" = 50' | SHEET NO. 1 OF 1 SHEETS | STA. 57+75 TO STA. 66+00

F.A.P RTE.	SECTION	COUNTY	TOTAL SHEETS	SHEET NO.
55	(W-1-15)BR-1	WINNEBAGO	59	13
		CONTRACT NO. 64D22		

FED. ROAD DIST. NO. | ILLINOIS | FED. AID PROJECT

REM1

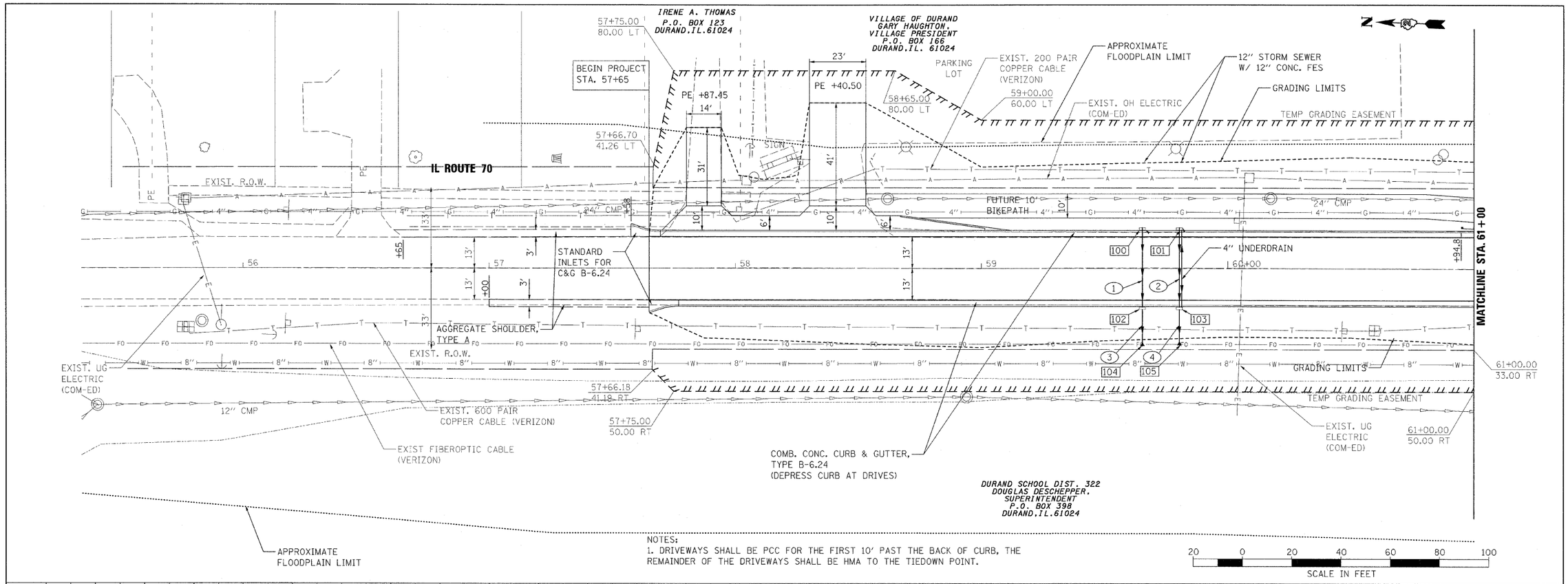

NOTES:
1. DRIVEWAYS SHALL BE PCC FOR THE FIRST 10' PAST THE BACK OF CURB, THE REMAINDER OF THE DRIVEWAYS SHALL BE HMA TO THE TIEDOWN POINT.

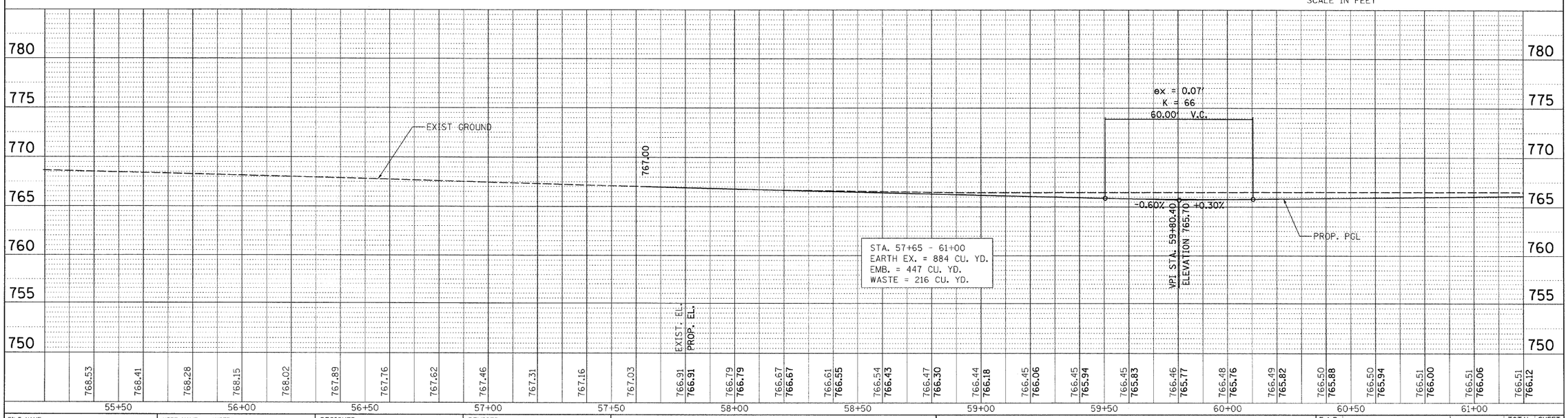

FILE NAME = H:\Projects\2944\DGNS\Z06207PLN1.dgn	USER NAME = $USER$	DESIGNED -	REVISED -
		DRAWN -	REVISED -
	PLOT SCALE = 20.0000 ' / IN.	CHECKED -	REVISED -
	PLOT DATE = 11/30/2009	DATE - 06/04/08	REVISED -

STATE OF ILLINOIS
DEPARTMENT OF TRANSPORTATION

IL. ROUTE 70 OVER OTTER CREEK
PLAN AND PROFILE

SCALE: 1" = 20' | SHEET NO. 1 OF 2 SHEETS | STA. 57+65 TO STA. 61+00

F.A.P RTE.	SECTION	COUNTY	TOTAL SHEETS	SHEET NO.
55	(W-1-15d)BR-1	WINNEBAGO	59	14
		CONTRACT NO. 64D22		
FED. ROAD DIST. NO.	ILLINOIS	FED. AID PROJECT		

PLN1

PLAN — SURVEYED / PLOTTED / ALIGNMENT CHECKED / RT OF WAY CHECKED / CADD FILE NAME — NOTE BOOK — NO. — BY — DATE

PROFILE — SURVEYED / PLOTTED / GRADES CHECKED / B.M. NOTED / STRUCTURE NOTATNS CHKD — NOTE BOOK — NO. — BY — DATE

HARRY O. HOFFER ASSOCIATES, INC. DESIGN AND CONSULTING ENGINEERS — 55 East Jackson Blvd. Suite 1400 Chicago, IL 60604 (312) 663-0411

PROJECT NUMBER 2944

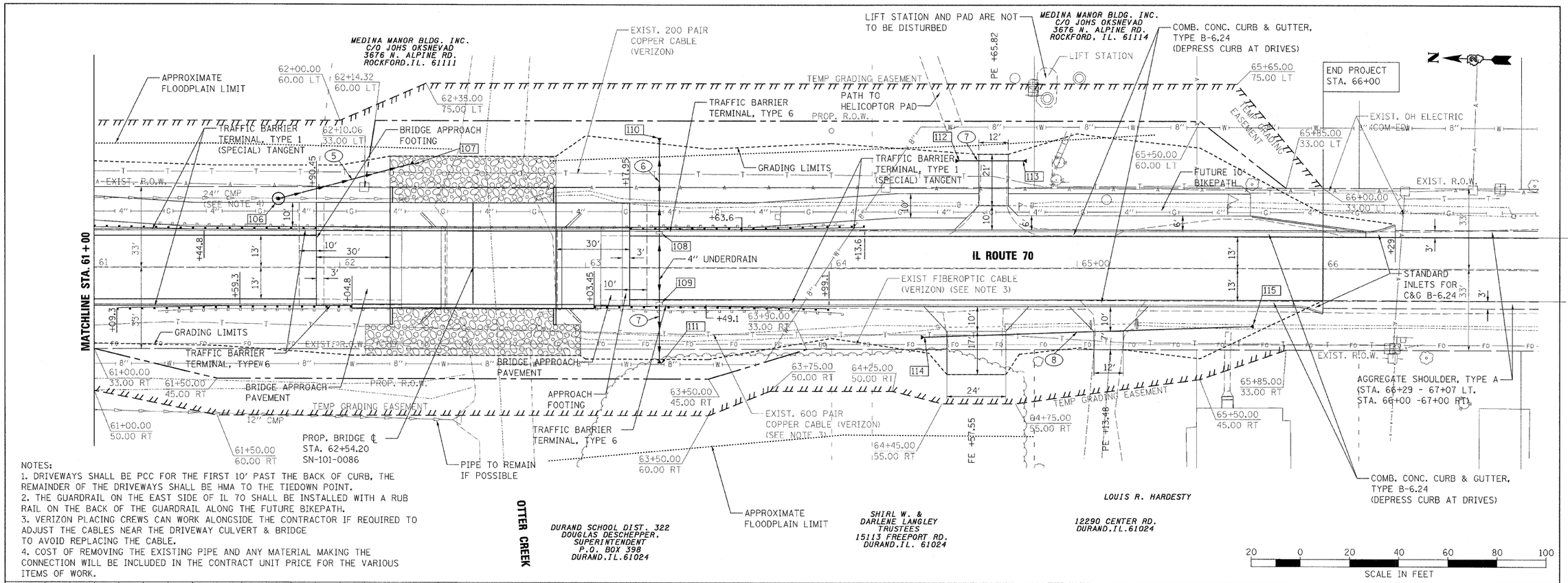

NOTES:
1. DRIVEWAYS SHALL BE PCC FOR THE FIRST 10' PAST THE BACK OF CURB, THE REMAINDER OF THE DRIVEWAYS SHALL BE HMA TO THE TIEDOWN POINT.
2. THE GUARDRAIL ON THE EAST SIDE OF IL 70 SHALL BE INSTALLED WITH A RUB RAIL ON THE BACK OF THE GUARDRAIL ALONG THE FUTURE BIKEPATH.
3. VERIZON PLACING CREWS CAN WORK ALONGSIDE THE CONTRACTOR IF REQUIRED TO ADJUST THE CABLES NEAR THE DRIVEWAY CULVERT & BRIDGE TO AVOID REPLACING THE CABLE.
4. COST OF REMOVING THE EXISTING PIPE AND ANY MATERIAL MAKING THE CONNECTION WILL BE INCLUDED IN THE CONTRACT UNIT PRICE FOR THE VARIOUS ITEMS OF WORK.

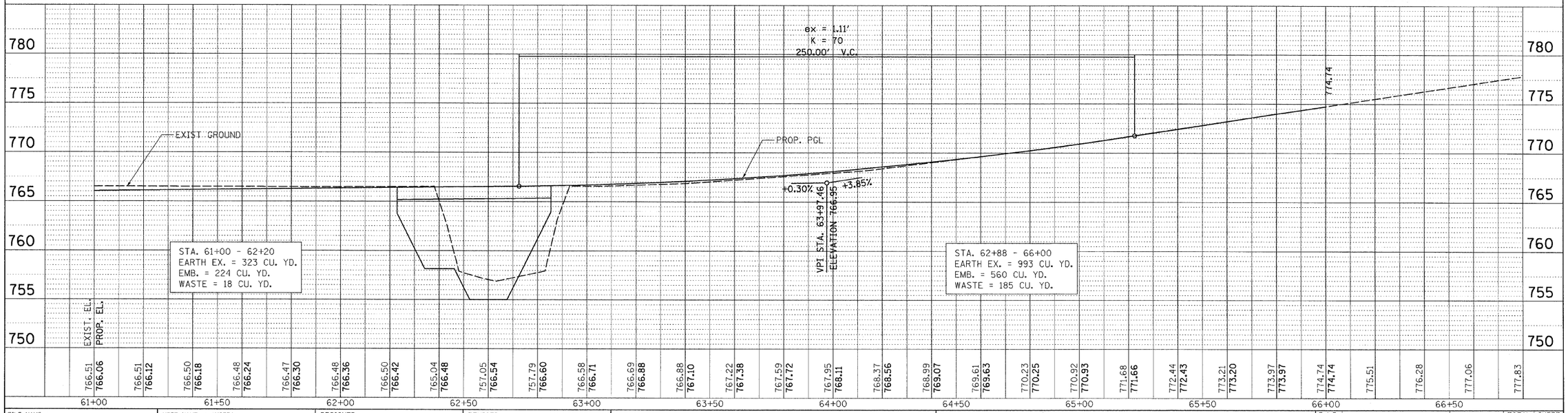

FILE NAME = H:\Projects\2944\DGNS\Z06207PLN1.dgn	USER NAME = $USER$	DESIGNED -	REVISED -
		DRAWN -	REVISED -
	PLOT SCALE = 20.0000 ' / IN.	CHECKED -	REVISED -
	PLOT DATE = 11/30/2009	DATE - 06/04/08	REVISED -

STATE OF ILLINOIS
DEPARTMENT OF TRANSPORTATION

IL. ROUTE 70 OVER OTTER CREEK
PLAN AND PROFILE

SCALE: 1" = 20' | SHEET NO. 2 OF 2 SHEETS | STA. 61+00 TO STA. 66+00

F.A.P RTE.	SECTION	COUNTY	TOTAL SHEETS	SHEET NO.
55	(W-1-15d)BR-1	WINNEBAGO	59	15
		CONTRACT NO. 64D22		
FED. ROAD DIST. NO.	ILLINOIS	FED. AID PROJECT		

PLN2

IL ROUTE 70 MAINTENANCE OF TRAFFIC NOTES

PRE-STAGE

EXISTING: ONE LANE IN EACH DIRECTION

PROPOSED: ONE LANE IN EACH DIRECTION

TRAFFIC CONTROL AND PROTECTION
INSTALL IDOT STANDARD 701326

INSTALL TEMPORARY PAVEMENT ON EASTBOUND AND WESTBOUND LANES.

STAGE 1

EXISTING: ONE LANE IN EACH DIRECTION

PROPOSED: ONE LANE, ONE WAY TRAFFIC IN CONSTRUCTION AREA CONTROLLED BY IDOT STANDARD 701201.

TRAFFIC CONTROL AND PROTECTION
1. INSTALL TEMPORARY TRAFFIC CONTROL DEVICES ACCORDING TO IDOT STANDARD 701321.
2. INSTALL ADVANCE WARNING SIGNS ALONG SOUTH ST.
3. INSTALL TEMPORARY PAVEMENT MARKINGS, INFORMATIONAL WARNING SIGNS (D2 STD. 39.2), DRIVEWAY STAGING SIGNS (D2 STD, 75.2) AND STOP LINE FOR TEMPORARY SIGNALS (D2 STD. 99.4).
4. SHIFT IL 70 TRAFFIC TO THE EAST SIDE OF THE EXISTING BRIDGE (SEE BRIDGE PLAN FOR DETAILS)

CONSTRUCTION
1. REMOVE WEST 15′ OF EXISTING BRIDGE AND APPROACH PAVEMENT AS REQUIRED.
2. CONSTRUCT WEST 15′ OF PROPOSED BRIDGE AND ROADWAY PAVEMENT AS REQUIRED.
3. CONSTRUCT CURB & GUTTER ON WEST SIDE OF ROADWAY (EXCLUDING INLETS)
3. CONSTRUCT PROPOSED GUARDRAIL ALONG WEST SIDE OF ROADWAY.
4. EXISTING DRIVEWAY ACCESS SHALL BE MAINTAINED BY THE CONTRACTOR WITHIN THE WORK ZONE USING TEMPORARY AGGREGATE.

SHIFT TEMPORARY TRAFFIC CONTROL DEVICES (IE STRIPING, BARRIERS AND ATTENUATORS)

STAGE 2

EXISTING: ONE LANE, ONE WAY TRAFFIC IN CONSTRUCTION AREA CONTROLLED BY TEMPORARY TRAFFIC SIGNAL AND IDOT STANDARD 701321

PROPOSED: ONE LANE, ONE WAY TRAFFIC IN CONSTRUCTION AREA CONTROLLED BY TEMPORARY TRAFFIC SIGNAL AND IDOT STANDARD 701321.

TRAFFIC CONTROL AND PROTECTION
1. REMOVE AND REINSTALL TEMPORARY TRAFFIC CONTROL DEVICES AND SIGNS USING IDOT STANDARD 701321 FOR TRAFFIC RELOCATION. PAY ITEM AND SPEC STIPULATES RELOCATION OF STANDARD 701321 AS INCIDENTAL AND INCLUDED IN EACH FOR STAGE 1.
2. INSTALL DRIVEWAY STAGING SIGNS (D2 STANDARD 39.2)

CONSTRUCTION
1. REMOVE EAST 15′ OF EXISTING BRIDGE AND APPROACH PAVEMENT AS REQUIRED.
2. CONSTRUCT EAST 27′ OF PROPOSED BRIDGE AND ROADWAY PAVEMENT AS REQUIRED.
3. CONSTRUCT CURB & GUTTER ON EAST SIDE OF ROADWAY.
4. CONSTRUCT BIKE TRAIL EMBANKMENT ALONG EAST PARKWAY.
5. CONSTRUCT PROPOSED GUARDRAIL ALONG EAST SIDE OF ROADWAY.
6. EXISTING DRIVEWAY ACCESS SHALL BE MAINTAINED BY THE CONTRACTOR WITHIN THE WORK ZONE USING TEMPORARY AGGREGATE.

REMOVE STANDARD 701321

STAGE 3

EXISTING: ONE LANE, ONE WAY TRAFFIC IN CONSTRUCTION AREA CONTROLLED BY TRAFFIC SIGNAL.

PROPOSED: ONE LANE IN EACH DIRECTION

TRAFFIC CONTROL AND PROTECTION
1. INSTALL IDOT STANDARD 701501.

CONSTRUCTION
1. PLACE SURFACE COURSE.
2. INSTALL PERMANENT PAVEMENT MARKINGS ON ROADWAY AND BRIDGE.
3. CONSTRUCT INLETS ON EAST SIDE OF ROADWAY.
4. PERFORM LANDSCAPING OPERATIONS.

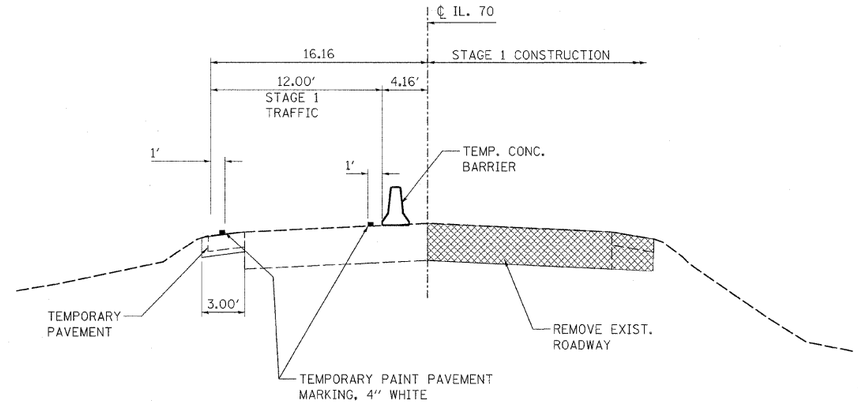

TYPICAL SECTION
STAGE 1

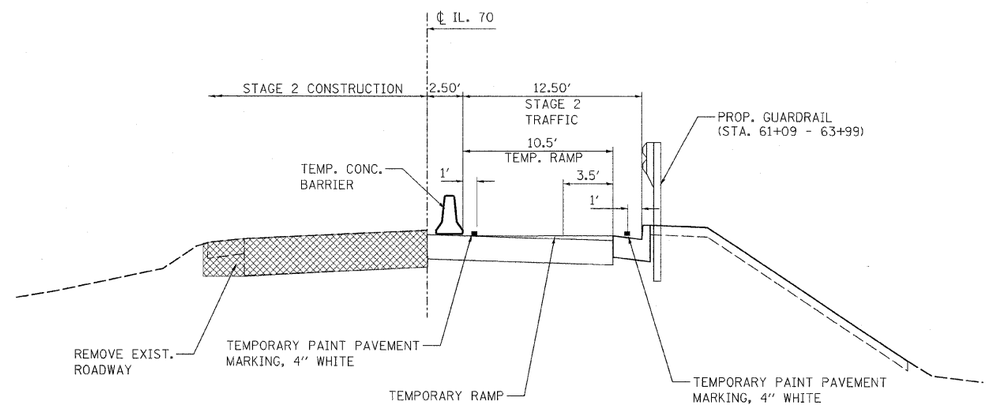

TYPICAL SECTION
STAGE 2

HOH — HARRY O. HEFTER-ASSOCIATES, INC. DESIGN AND CONSULTING ENGINEERS — 55 East Jackson Blvd. Suite 800 Chicago, Il 60604 312-346-8131 — PROJECT NUMBER 2944

FILE NAME = H:\Projects\2944\DGNS\Z06207MOT1.dgn	USER NAME = $USER$	DESIGNED - AAF	REVISED -	STATE OF ILLINOIS DEPARTMENT OF TRANSPORTATION	IL. ROUTE 70 OVER OTTER CREEK MAINTENANCE OF TRAFFIC NOTES
		DRAWN - AAF	REVISED -		
	PLOT SCALE = 5.0000 ′ / IN.	CHECKED - BAP	REVISED -		
	PLOT DATE = 11/30/2009	DATE - 11/30/2009	REVISED -		SCALE: NONE · SHEET NO. 1 OF 2 SHEETS · STA. N/A · TO STA. N/A

F.A.P RTE.	SECTION	COUNTY	TOTAL SHEETS	SHEET NO.
55	(W-1-15)BR-1	WINNEBAGO	59	16
		CONTRACT NO. 64D22		
FED. ROAD DIST. NO.	ILLINOIS	FED. AID PROJECT		

MOT1

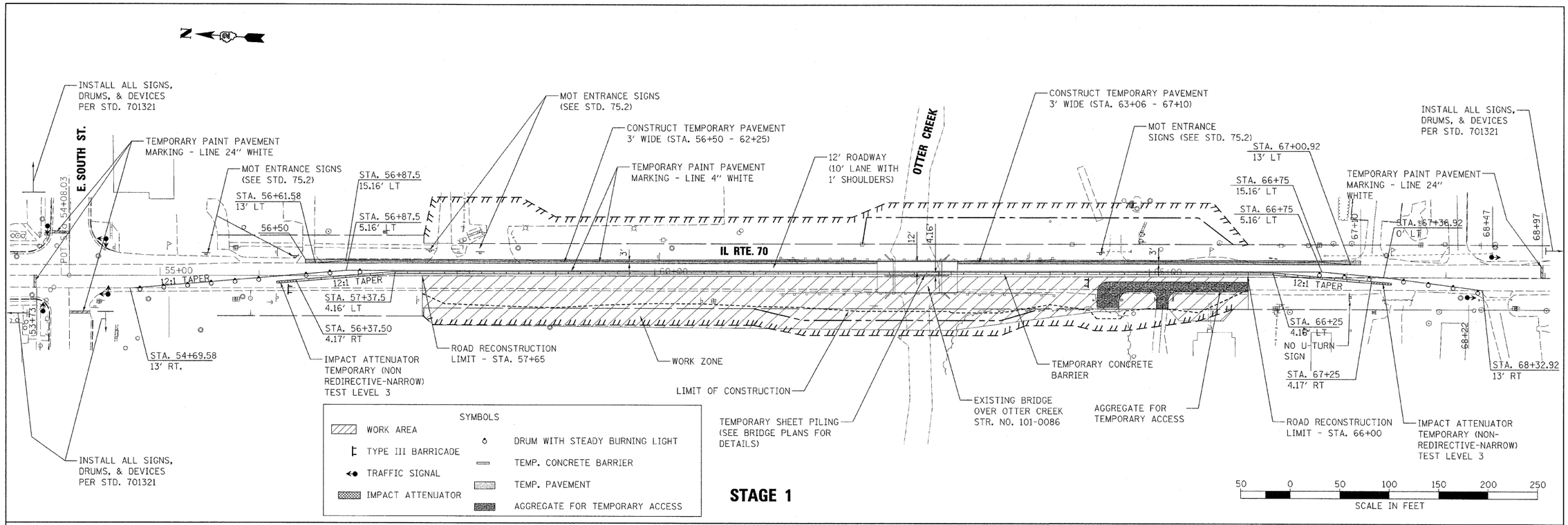

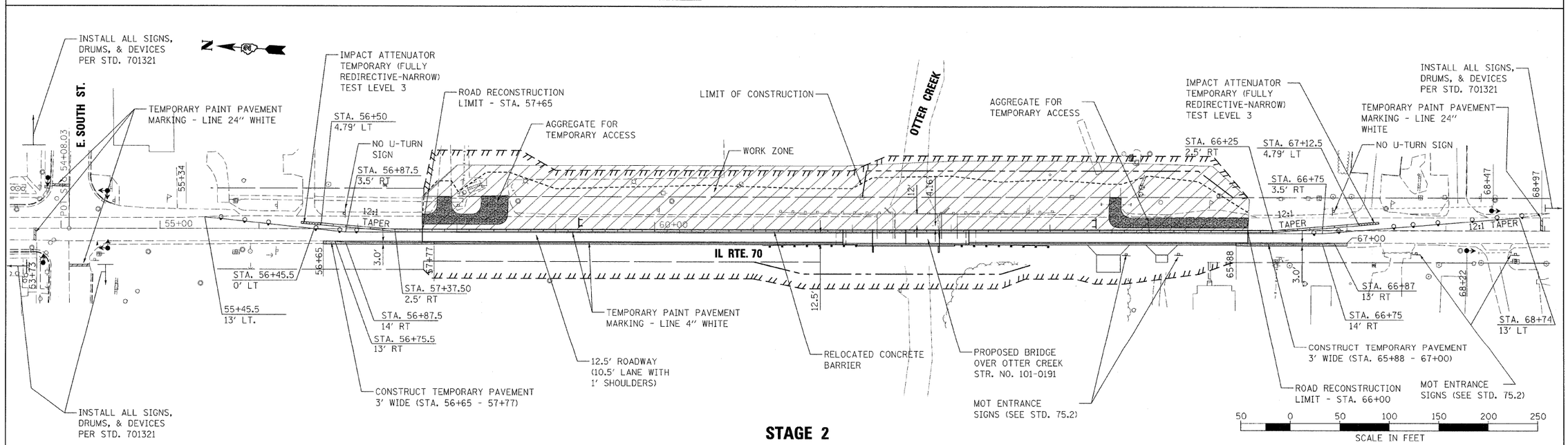

FILE NAME = H:\Projects\2944\DGNS\Z06207MOT2.dgn	USER NAME = $USER$	DESIGNED -	REVISED -
		DRAWN -	REVISED -
	PLOT SCALE = 50.0000 ' / IN.	CHECKED -	REVISED -
	PLOT DATE = 11/30/2009	DATE - 11/30/2009	REVISED -

STATE OF ILLINOIS
DEPARTMENT OF TRANSPORTATION

IL. ROUTE 70 OVER OTTER CREEK
STAGING PLAN

SCALE: 1" = 50' | SHEET NO. 2 OF 2 SHEETS | STA. 57+65 TO STA. 66+00

HOH — HARRY O. HETTEN-ASSOCIATES, INC. DESIGN AND CONSULTING ENGINEERS — 55 East Jackson Blvd. Suite 800 Chicago, Il 60604 312-246-4131

PROJECT NUMBER 2944

F.A.P RTE.	SECTION	COUNTY	TOTAL SHEETS	SHEET NO.
55	(W-1-15d)BR-1	WINNEBAGO	59	17
		CONTRACT NO. 64D22		
FED. ROAD DIST. NO.	ILLINOIS	FED. AID PROJECT		

MOT2

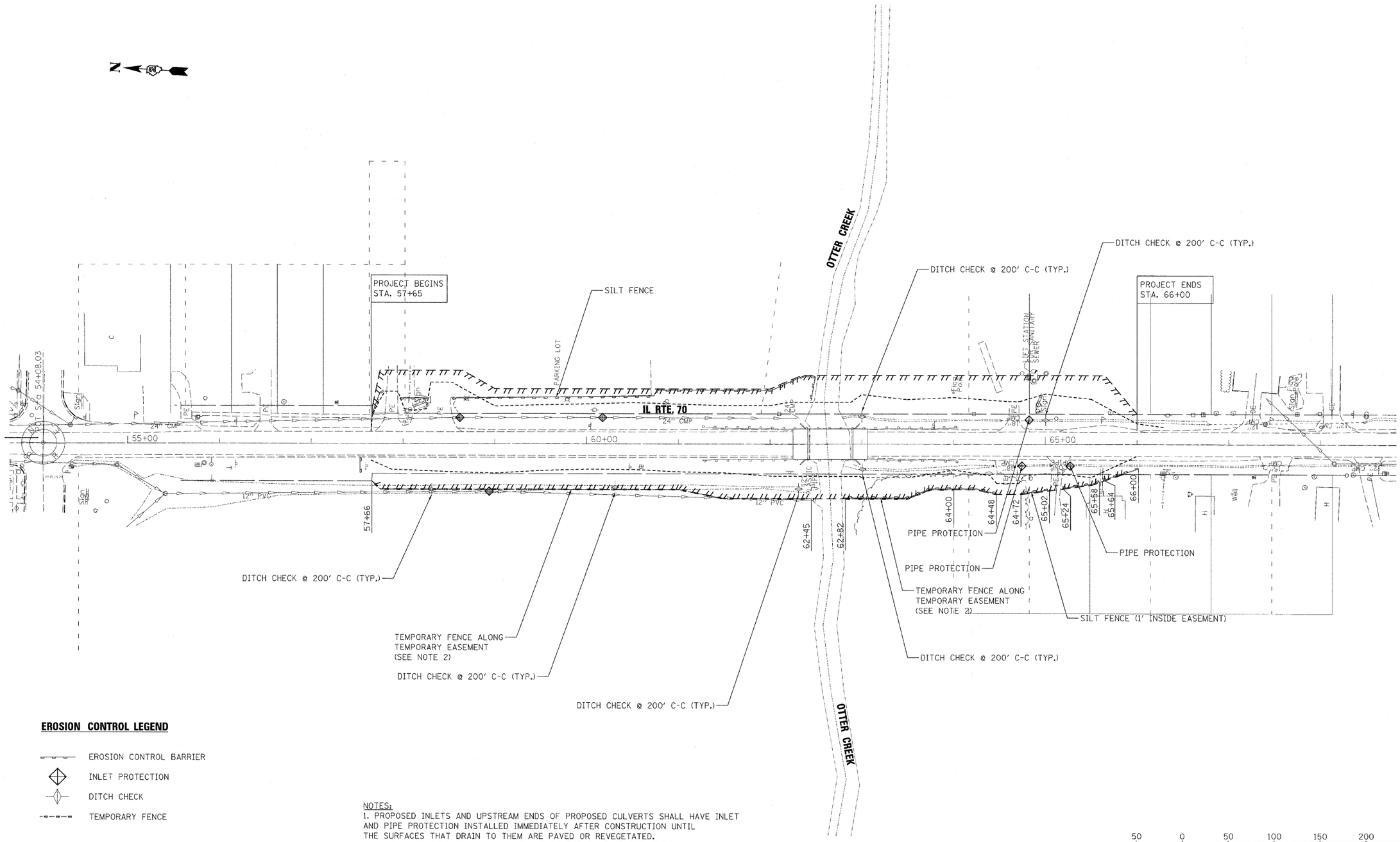

EROSION CONTROL LEGEND

- EROSION CONTROL BARRIER
- INLET PROTECTION
- DITCH CHECK
- TEMPORARY FENCE

NOTES:

1. PROPOSED INLETS AND UPSTREAM ENDS OF PROPOSED CULVERTS SHALL HAVE INLET AND PIPE PROTECTION INSTALLED IMMEDIATELY AFTER CONSTRUCTION UNTIL THE SURFACES THAT DRAIN TO THEM ARE PAVED OR REVEGETATED.
2. INSTALL TEMPORARY FENCE ALONG THE TEMPORARY EASEMENT WITHIN THE DURAND SCHOOL DISTRICT PROPERTY. SEE THE PLAN AND PROFILE SHEETS FOR THE TEMPORARY EASEMENT LOCATIONS.

50 0 50 100 150 200 250
SCALE IN FEET

HOH — HARVEY O. HEFTER-ASSOCIATES, INC. DESIGN AND CONSULTING ENGINEERS — 55 East Jackson Blvd. Suite 800 Chicago, Il 60604 312-346-4137 — PROJECT NUMBER 2944

FILE NAME = H:\Projects\2944\DGNS\206207ER1.dgn	USER NAME = $USER$	DESIGNED -	REVISED -	STATE OF ILLINOIS DEPARTMENT OF TRANSPORTATION	IL. ROUTE 70 OVER OTTER CREEK EROSION AND SEDIMENT CONTROL PLAN	F.A.P RTE.	SECTION	COUNTY	TOTAL SHEETS / SHEET NO.
		DRAWN -	REVISED -			55	(W-1-15d)BR-1	WINNEBAGO	59 / 18
	PLOT SCALE = 50.0000 ' / IN.	CHECKED -	REVISED -					CONTRACT NO. 64D22	
	PLOT DATE = 11/30/2009	DATE - 11/30/2009	REVISED -		SCALE: 1" = 50' / SHEET NO. 1 OF 1 SHEETS / STA. 57+65 TO STA. 66+00	FED. ROAD DIST. NO.	ILLINOIS	FED. AID PROJECT	

ER1

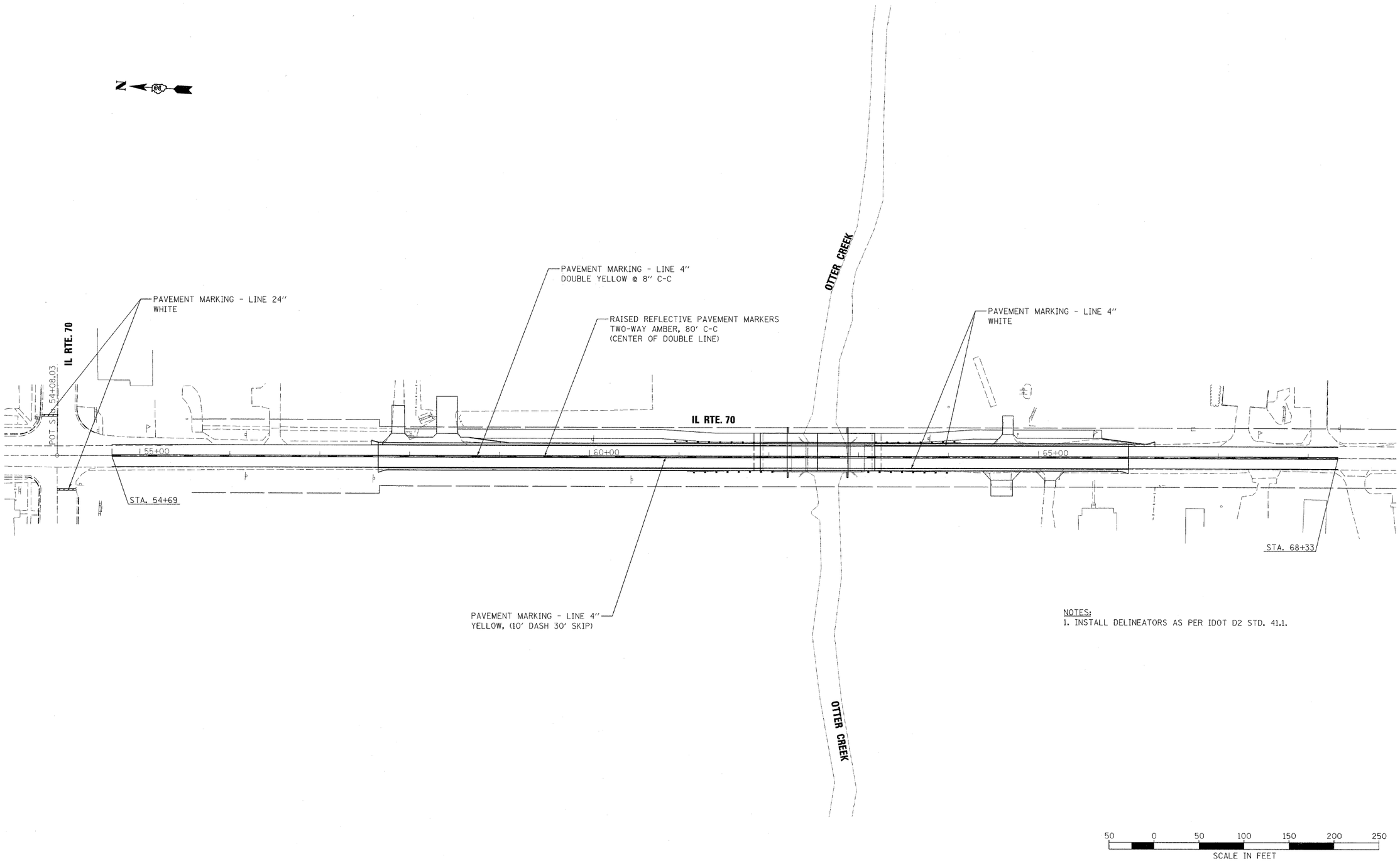

NOTES:
1. INSTALL DELINEATORS AS PER IDOT D2 STD. 41.1.

HOH — HARRY O. HEFTER-ASSOCIATES, INC. DESIGN AND CONSULTING ENGINEERS — 55 East Jackson Blvd. Suite 890 Chicago, Il 60604 312-346-8131 — PROJECT NUMBER 2944

FILE NAME = H:\Projects\2944\DGNS\Z86207PM1.dgn	USER NAME = $USER$	DESIGNED -	REVISED -	STATE OF ILLINOIS DEPARTMENT OF TRANSPORTATION	IL. ROUTE 70 OVER OTTER CREEK PAVEMENT MARKING PLAN	F.A.P RTE.	SECTION	COUNTY	TOTAL SHEETS	SHEET NO.
		DRAWN -	REVISED -			55	(W-1-15d)BR-1	WINNEBAGO	59	19
	PLOT SCALE = 50.0000 ' / IN.	CHECKED -	REVISED -					CONTRACT NO. 64D22		
	PLOT DATE = 11/30/2009	DATE - 11/30/2009	REVISED -		SCALE: 1" = 50' SHEET NO. 1 OF 1 SHEETS STA. 57+65 TO STA. 66+00	FED. ROAD DIST. NO.	ILLINOIS	FED. AID PROJECT		

PM1

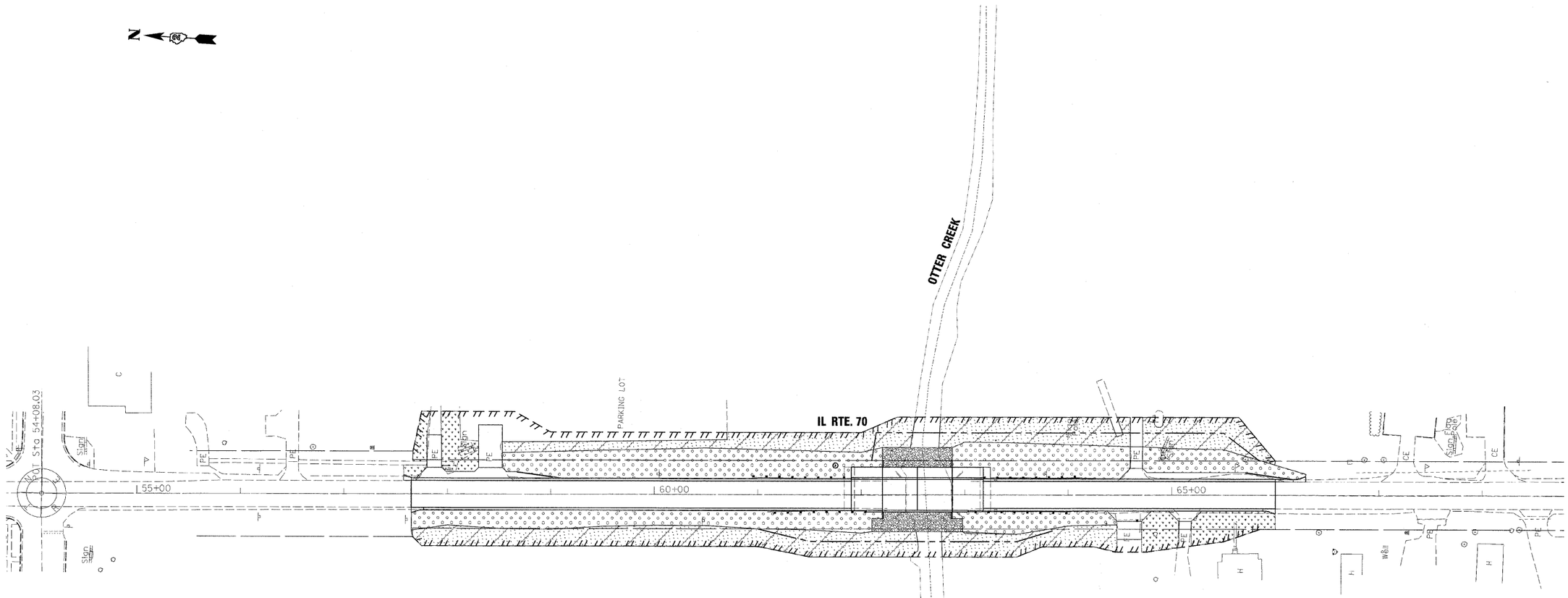

LANDSCAPING LEGEND

SEEDING, CLASS 1 (SEE NOTE 1)
MULCH, METHOD 2
NITROGEN FERTILIZER NUTRIENT
PHOSPHORUS FERTILIZER NUTRIENT
POTASSIUM FERTILIZER NUTRIENT

SEEDING, CLASS 2A (SEE NOTE 1)
EROSION CONTROL BLANKET OR MULCH, METHOD 2
NITROGEN FERTILIZER NUTRIENT
PHOSPHORUS FERTILIZER NUTRIENT
POTASSIUM FERTILIZER NUTRIENT

SEEDING, CLASS 4 (SEE NOTE 1)
EROSION CONTROL BLANKET
NITROGEN FERTILIZER NUTRIENT
PHOSPHORUS FERTILIZER NUTRIENT
POTASSIUM FERTILIZER NUTRIENT

NOTES:

1. SEE GENERAL NOTES FOR SPECIFIC LOCATIONS OF SEEDING TYPES.
2. EROSION CONTROL BLANKET WILL BE USED ON 3:1 SIDE SLOPES AND DITCH BOTTOMS, MULCH, METHOD 2 WILL BE USED ON FLAT AREAS BEHIND CURB AND GUTTER.
3. TOPSOIL FURNISH AND PLACE IS INCLUDED IN THE COST OF EARTH EXCAVATION (SEE GENERAL NOTES).
4. FERTILIZER NUTRIENTS ARE INCLUDED IN THE COST OF SEEDING (SEE GENERAL NOTES).

50 0 50 100 150 200 250
SCALE IN FEET

HOH — HARRY O. HEFTER-ASSOCIATES, INC. DESIGN AND CONSULTING ENGINEERS — 55 East Jackson Blvd. Suite 600 Chicago, Il 60604 312-346-8181

PROJECT NUMBER 2944

FILE NAME = H:\Projects\2944\DGNS\206207LS1.dgn	USER NAME = $USER$	DESIGNED -	REVISED -
		DRAWN -	REVISED -
	PLOT SCALE = 50.0000 ' / IN.	CHECKED -	REVISED -
	PLOT DATE = 11/30/2009	DATE - 11/30/2009	REVISED -

STATE OF ILLINOIS
DEPARTMENT OF TRANSPORTATION

IL. ROUTE 70 OVER OTTER CREEK
LANDSCAPING PLAN

SCALE: 1" = 50' | SHEET NO. 1 OF 1 SHEETS | STA. 57+65 TO STA. 66+00

F.A.P RTE.	SECTION	COUNTY	TOTAL SHEETS	SHEET NO.
55	(W-1-15d)BR-1	WINNEBAGO	59	20
		CONTRACT NO. 64D22		
FED. ROAD DIST. NO.	ILLINOIS	FED. AID PROJECT		

LS1

B.M. #401: Chiseled square on concrete lift station west side of manhole located S.E. of bridge. El. 772.498

Existing Structure: S.N. 101-0086 originally constructed in 1923. The bridge was reconstructed in 1971 and resurfaced in 1996. The existing structure is a two span 17" PPC deck bridge with a length of 49'-2½" B-B of abutments and a width of 32'-4" F-F of steel railings. The bridge structure will be removed and replaced utilizing stage construction.

No Salvage.

STATE OF ILLINOIS
DEPARTMENT OF TRANSPORTATION

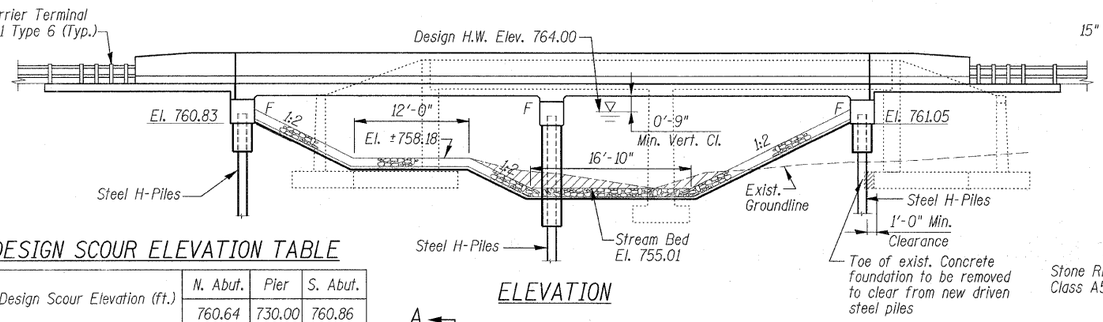

ELEVATION

DESIGN SCOUR ELEVATION TABLE

Design Scour Elevation (ft.)	N. Abut.	Pier	S. Abut.
	760.64	730.00	760.86

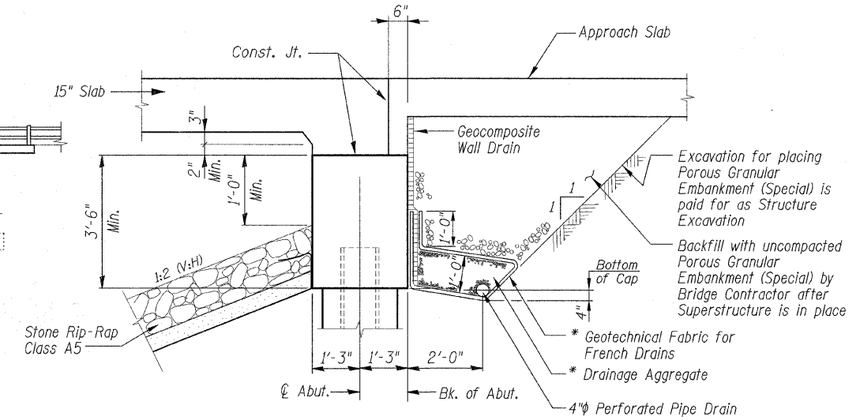

SECTION THRU INTEGRAL ABUTMENT

* Included in the cost of Pipe Underdrains for Structures.

NOTE:
All drainage system components shall extend to 2'-0" from the end of each wingwall except an outlet pipe shall extend until intersecting with the side slopes. The pipes shall drain into concrete headwalls. (See Article 601.05 of the Standard Specifications anD Highway Standard 601101).

SEISMIC DATA

Seismic Performance Zone (SPZ) = 1
Design Spectral Acceleration at 1.0 Sec. (S_{D1}) = 0.075g
Design Spectral Acceleration at 0.2 Sec .(S_{DS}) = 0.119g
Soil Site Class = D

DESIGN SPECIFICATIONS

2007 AASHTO LRFD Bridge Design Specifications
4th Edition with 2008 Interims

LOADING HL-93

Allow 50#/sq. ft. for future wearing surface

DESIGN STRESSES

Field Units
New Construction
f'c = 3,500 psi
fy = 60,000 psi (Reinf.)

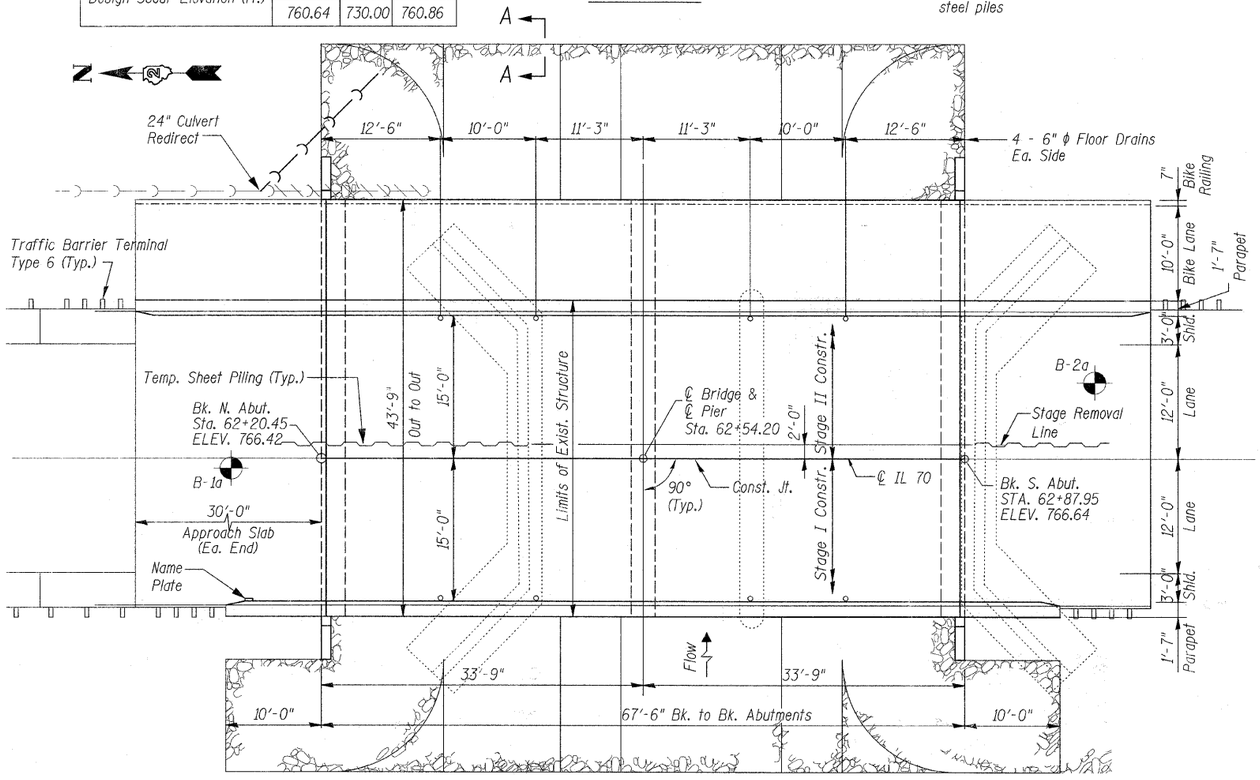

PLAN

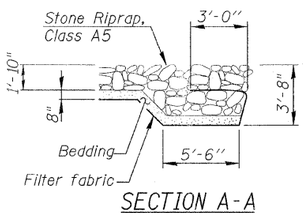

SECTION A-A

STATION 62+54.20
BUILT 2009 BY
STATE OF ILLINOIS
F.A.S. 55 - SEC. W-1-15d-BR-1
LOADING HL93
STR. NO. 101-0191

NAME PLATE

See Std. 515001

APPROVED
FOR STRUCTURAL ADEQUACY ONLY
Ralph E. Anderson (TJP)
ENGINEER OF BRIDGES AND STRUCTURES

11-30-09
date
STATE OF ILLINOIS
MOHAMMAD M. HUSAIN
0081-005529
STRUCTURAL ENGINEER
expires 11-30-2010
signature

LEGEND:

B-1a = Boring No. 1 a

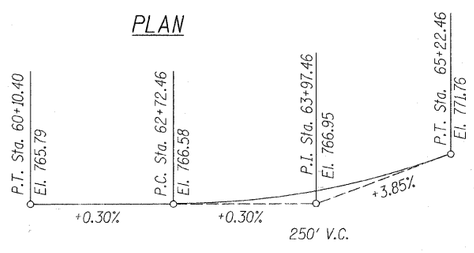

PROFILE GRADE

Along ℄ Roadway

WATERWAY INFORMATION

Drainage Area = 16.1 sq. mi. Low Grade Elev. 765.70 @ Sta. 59+80.40

Flood	Freq. Yr.	Discharge C.F.S.	Opening Sq. ft Exist.	Opening Sq. ft Prop.	Nat. H.W.E. ft.	Head - ft. Exist.	Head - ft. Prop.	Headwater Elev. -El. Exist.	Headwater Elev. -El. Prop.
	10	2010	296	303	763.3	2.9	2.2	766.2	765.5
Design	50	3240	329	344	764.0	3.7	3.4	767.7	767.4
Base	100	3800	343	344	764.3	3.0	3.1	767.3	767.4
Exist. Overtop	15	2200	301		763.4	3.0		766.4	
Prop. Overtop	20	2300		321	763.6		2.8		766.4

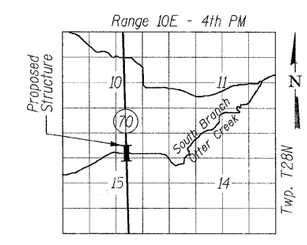

LOCATION SKETCH

GENERAL PLAN AND ELEVATION
IL 70 OVER SOUTH BRANCH OF OTTER CREEK
FAS ROUTE 55 (IL70)
SEC. (W-1-15d)BR-1
WINNEBAGO COUNTY
STA. 62+54.20
STRUCTURE NO. 101-0191

SHEET NO. 1	F.A.S. RTE.	SECTION	COUNTY	TOTAL SHEETS	SHEET NO.
21 SHEETS	55	(W-1-15d)BR-1	WINNEBAGO	59	21
			CONTRACT NO. 64D22		
	FED. ROAD DIST. NO.	ILLINOIS	FED. AID PROJECT		

DESIGNED	MMH
CHECKED	RAD
DRAWN	R.VEJAR
CHECKED	RAD

HOH ENGINEERS, INC.
55 E. Jackson Blvd.
Chicago, Illinois 60604
312.346.8131
PROJECT # 2945

STATE OF ILLINOIS
DEPARTMENT OF TRANSPORTATION

GENERAL NOTES

1. Reinforcement bars shall conform to the requirements of ASTM A 706 Gr 60. See Special Provisions.
2. Reinforcement bars designated (E) shall be epoxy coated.
3. Layout of slope protection system may be varied in the field to suit ground conditions as directed by the Engineer.
4. The Contractor shall drive test piles to 110% of the nominal required bearing specified in production locations at substructures specified or approved by the Engineer before ordering the remainder of piles.
5. Excavation behind existing abutment walls shall be performed to balance front and back soil pressure before removing the existing superstructure. The Contractor shall sawcut the upper portion of the existing abutment at the stage removal line before Stage 1 removal to ensure the remaining portion will not be prematurely damaged.
6. The removal of superstructure, abutments, wingwalls, sidewalks, parapets, fence, Pier, rail and all other attached appurtenances shall be included in "Removal of Existing Structures".
7. The Contractor shall make allowance for the deflection of forms, shrinkage and settlement of false work, in addition to allowance for dead load deflection. Forms for deck slab shall be removed prior to placement of bridge approach pavement.
8. If a portion of the pier wall or concrete encasement is underwater, reinforcement may be placed underwater in to forms. Concrete shall be tremied according to Article 503.08 of the Standard Specifications to an elevation of 1'-0" above the water line at the time of construction.
9. Slip forming of the parapets is not allowed.

TOTAL BILL OF MATERIAL

ITEM	UNIT	SUPER	SUB	TOTAL
Removal of Existing Structures No. 1	Each	-	-	1
Structure Excavation	Cu. Yd.	-	65	65
Concrete Structures	Cu. Yd.	-	97.4	97.4
Concrete Encasement	Cu. Yd.	-	8.7	8.7
Temporary Sheet Piling	Sq. Ft.	-	496	496
Concrete Superstructure	Cu. Yd.	285.5	-	285.5
Name Plates	Each	1	-	1
Bridge Deck Grooving	Sq. Yd.	534	-	534
Protective Coat	Sq. Yd.	755	-	755
Reinforcement Bars, Epoxy Coated	Pound	37,550	43,690	81,240
Furnishing Steel Piles HP-12x53	Foot	-	1,508	1,508
Driving Piles	Foot	-	1,508	1,508
Test Piles HP-12x53	Each	-	2	2
Bar Splicers	Each	122	274	396
Stone Riprap, Class A5	Sq. Yd.	-	712	712
Porous Granular Embankment (Special)	Cu. Yd.	-	50	50
Pipe Underdrains for Structures, 4"	Foot	-	150	150
Filter Fabric	Sq. Yd.	-	712	712
Geocomposite Wall Drain	Sq. Yd.	-	81	81
Floor Drains	Each	8	-	8
Bicycle Railing	Foot	128	-	128
Parapet Railing	Foot	128	-	128
Underwater Structure Excavation Protection - Location 1	Each	-	1	1

INDEX OF SHEETS

1. General Plan and Elevation
2. General Notes, Index of Sheets & Total Bill of Material
3. Stage Construction Details
4. Temporary Concrete Barrier for Stage Construction
5. Top of Slab Elevations - Sheet 1
6. Top of Slab Elevations - Sheet 2
7. Top of North Approach Slab Elevations
8. Top of South Approach Slab Elevations
9. Bridge Approach Slab Details - Sheet 1
10. Bridge Approach Slab Details - Sheet 2
11. Superstructure
12. Superstructure Details - Sheet 1
13. Superstructure Details - Sheet 2
14. Bicycle Railing
15. North Abutment
16. South Abutment
17. Pier
18. Bar Splicer Assembly Details
19. HP Pile Details
20. Soil Borings - Sheet 1
21. Soil Borings - Sheet 2

GENERAL NOTES,
INDEX OF SHEETS AND
TOTAL BILL OF MATERIAL
STRUCTURE NO. 101-0191

DESIGNED	MMH
CHECKED	RAD
DRAWN	R.VEJAR
CHECKED	RAD

HOH ENGINEERS, INC.
55 E. Jackson Blvd.
Chicago, Illinois 60604
312.346.8131
PROJECT # 2945

SHEET NO. 2	F.A.S. RTE.	SECTION	COUNTY	TOTAL SHEETS	SHEET NO.
21 SHEETS	55	(W-1-15d)BR-1	WINNEBAGO	59	22
			CONTRACT NO. 64D22		
	FED. ROAD DIST. NO.	ILLINOIS	FED. AID PROJECT		

STATE OF ILLINOIS
DEPARTMENT OF TRANSPORTATION

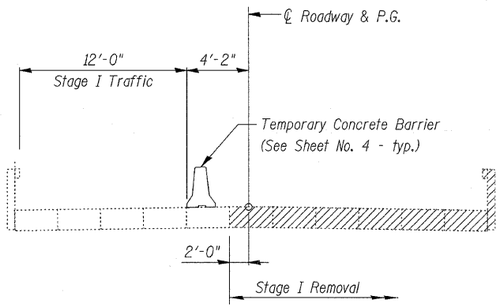

STAGE I REMOVAL
(Looking South)

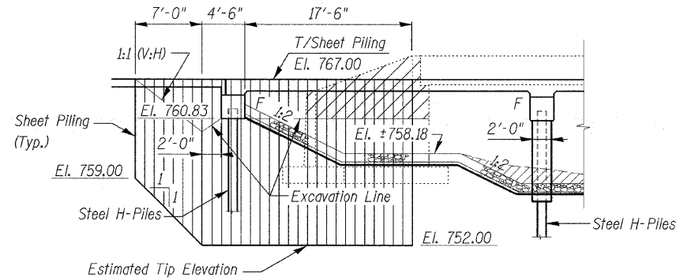

NORTH ABUTMENT
TEMPORARY SHEET PILING

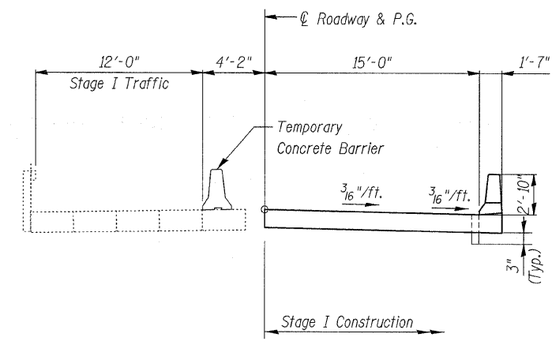

STAGE I CONSTRUCTION

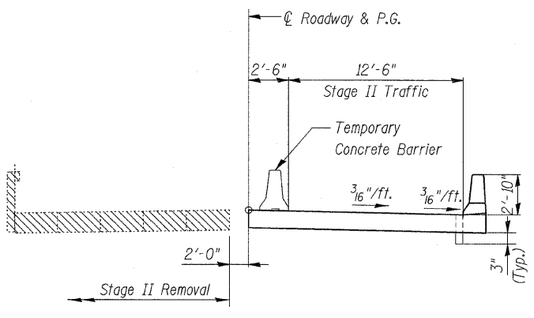

STAGE II REMOVAL

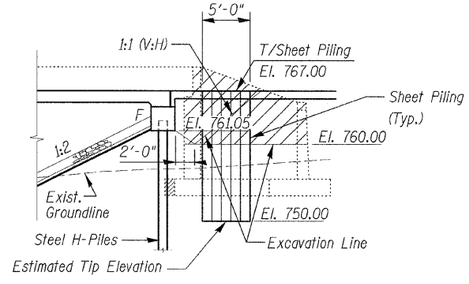

SOUTH ABUTMENT
TEMPORARY SHEET PILING

NOTE:
Hatched areas indicate removal of Existing Structure.

Min. Section Modulus of Sheet Piling = 4.50 in³/ft.
Min. Embedment depth - N. Abut. = 9'-0"
Min. Embedment depth - S. Abut. = 10'-0"
Required Temporary Sheet Piling = 496 Sq.Ft.
(Total for both Abutments)

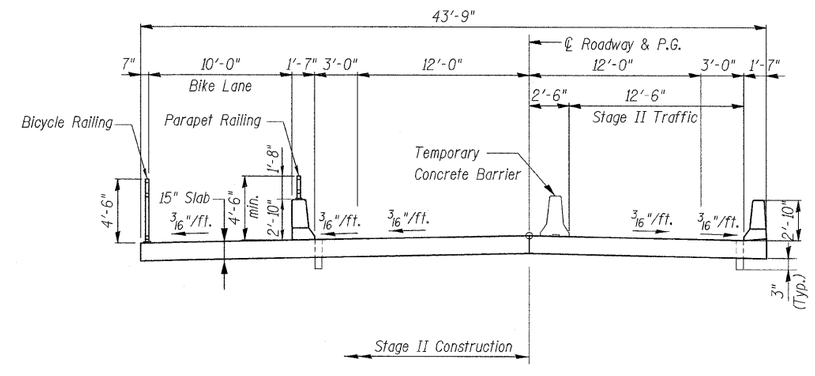

STAGE II CONSTRUCTION

NOTES

1. If the Contractor chooses to alter the temporary cantilevered sheet piling design requirements shown on the plans, a design submittal including plan details and calculations will be required for review and acceptance by the Engineer.
2. The Contractor shall connect the first sheet to the existing abutment wall to ensure stability of sheets driven to the top of the existing footing. This connection shall be reviewed and accepted by the Engineer and included in the cost for Temporary Sheet Piling.

STAGE CONSTRUCTION
DETAILS
STRUCTURE NO. 101-0191

DESIGNED	MMH
CHECKED	RAD
DRAWN	R.VEJAR
CHECKED	RAD

HOH ENGINEERS, INC.
55 E. Jackson Blvd.
Chicago, Illinois 60604
312.346.8131
PROJECT # 2945

SHEET NO. 3	F.A.S. RTE.	SECTION	COUNTY	TOTAL SHEETS	SHEET NO.
21 SHEETS	55	(W-1-15d)BR-1	WINNEBAGO	59	23
			CONTRACT NO. 64D22		
	FED. ROAD DIST. NO.	ILLINOIS	FED. AID PROJECT		

STATE OF ILLINOIS
DEPARTMENT OF TRANSPORTATION

When "A" is 3'-6" or less, the temporary concrete barrier shall be anchored to the new slab according to Detail I or Detail II. No anchorage is required when "A" is greater than 3'-6".

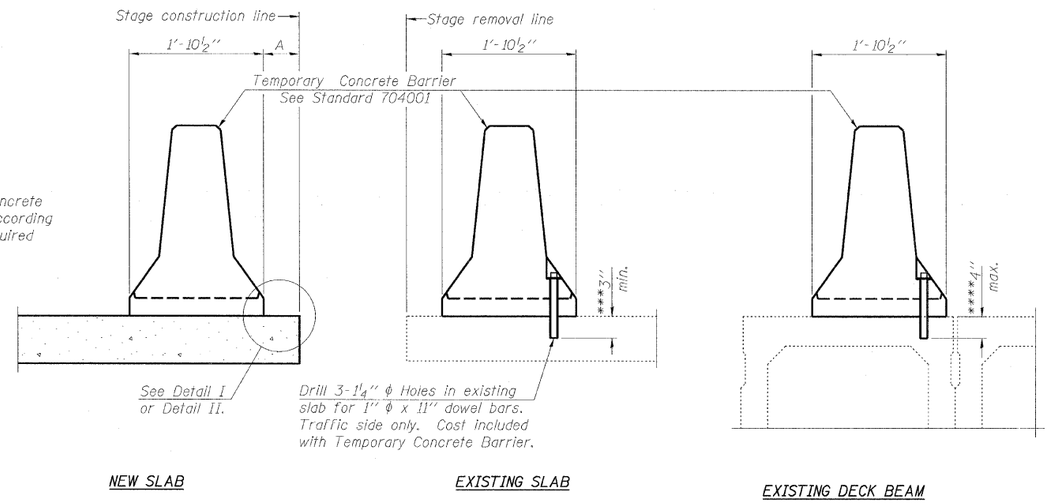

SECTIONS THRU SLAB OR DECK BEAM

NOTES

Detail I - With Bar Splicer or Couplers:
Connect one (1) 1"x7"x10" steel ℙ to the top layer of couplers with 2-⅝" ϕ bolts screwed to coupler at approximate ℄ of each barrier panel.

Detail II - With Extended Reinforcement Bars:
Connect one (1) 1"x7"x 10" steel ℙ to the concrete slab or concrete wearing surface with 2-⅝" ϕ Expansion Anchors or cast in place inserts spaced between the top layer of reinforcement at approximate ℄ of each barrier panel.

Cost of anchorage is included with Temporary Concrete Barrier.

The 1" x 7" x 10" plate shall not be removed until stage II construction forms and all reinforcement bars are in place and the concrete is ready to be placed.

*** Dimension shown is minimum required embedment into concrete. If hot-mix asphalt wearing surface is present, minimum embedment shall be in addition to wearing surface depth.

**** If existing deck beam is to remain in place after stage construction, embedment shall only be into wearing surface and not into existing deck beam concrete.

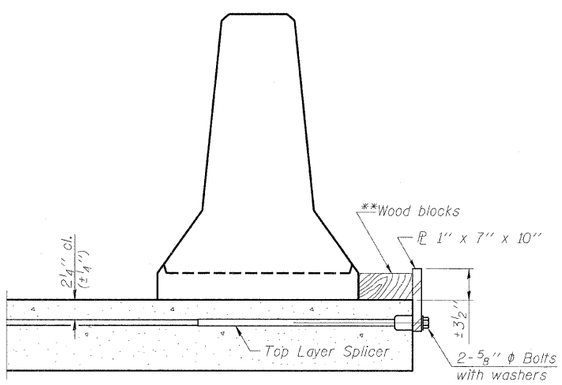

DETAIL I

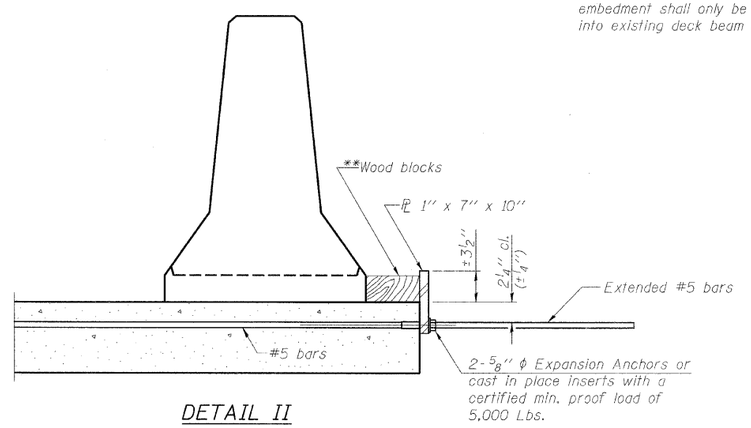

DETAIL II

**Wood blocks may be omitted when required to provide minimum stage traffic lane width. When the wood blocks are omitted, the concrete barrier shall be in direct contact with the steel retainer plate.

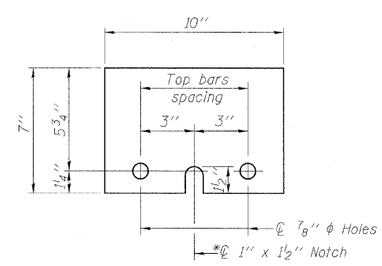

STEEL RETAINER ℙ 1" x 7" x 10"

* Required only with Detail II

TEMPORARY CONCRETE BARRIER
FOR STAGE CONSTRUCTION
STRUCTURE NO. 101-0191

DESIGNED	MMH
CHECKED	RAD
DRAWN	R.VEJAR
CHECKED	RAD

R-27 10-1-08

HOH ENGINEERS, INC.
55 E. Jackson Blvd.
Chicago, Illinois 60604
312.346.8131
PROJECT # 2945

SHEET NO. 4	F.A.S. RTE.	SECTION	COUNTY	TOTAL SHEETS	SHEET NO.
21 SHEETS	55	(W-1-15d)BR-1	WINNEBAGO	59	24
			CONTRACT NO. 64D22		
	FED. ROAD DIST. NO.	ILLINOIS	FED. AID PROJECT		

STATE OF ILLINOIS
DEPARTMENT OF TRANSPORTATION

EAST EDGE OF DECK SLAB

Location	Station	Offset	Theoretical Grade Elevations	Theoretical Grade El. Adj. for D.L. Deflection
Bk. of N. Abut.	6220.45	-27.17	765.99	765.99
Cl. N. Abutment	6221.70	-27.17	765.99	765.99
A	6231.70	-27.17	766.02	766.04
B	6241.70	-27.17	766.05	766.07
Cl. of Pier	6254.20	-27.17	766.09	766.09
C	6264.20	-27.17	766.12	766.13
D	6274.20	-27.17	766.15	766.17
Cl. S. Abutment	6286.70	-27.17	766.20	766.20
Bk. of S. Abut.	6287.95	-27.17	766.21	766.21

FACE OF E. PARAPET

Location	Station	Offset	Theoretical Grade Elevations	Theoretical Grade El. Adj. for D.L. Deflection
Bk. of N. Abut.	6220.45	-15.00	766.18	766.18
Cl. N. Abutment	6221.70	-15.00	766.18	766.18
A	6231.70	-15.00	766.21	766.23
B	6241.70	-15.00	766.24	766.26
Cl. of Pier	6254.20	-15.00	766.28	766.28
C	6264.20	-15.00	766.31	766.32
D	6274.20	-15.00	766.34	766.36
Cl. S. Abutment	6286.70	-15.00	766.39	766.39
Bk. of S. Abut.	6287.95	-15.00	766.40	766.40

E. EDGE OF ROADWAY

Location	Station	Offset	Theoretical Grade Elevations	Theoretical Grade El. Adj. for D.L. Deflection
Bk. of N. Abut.	6220.45	-12.00	766.23	766.23
Cl. N. Abutment	6221.70	-12.00	766.23	766.23
A	6231.70	-12.00	766.26	766.28
B	6241.70	-12.00	766.29	766.30
Cl. of Pier	6254.20	-12.00	766.33	766.33
C	6264.20	-12.00	766.36	766.36
D	6274.20	-12.00	766.39	766.41
Cl. S. Abutment	6286.70	-12.00	766.44	766.44
Bk. of S. Abut.	6287.95	-12.00	766.45	766.45

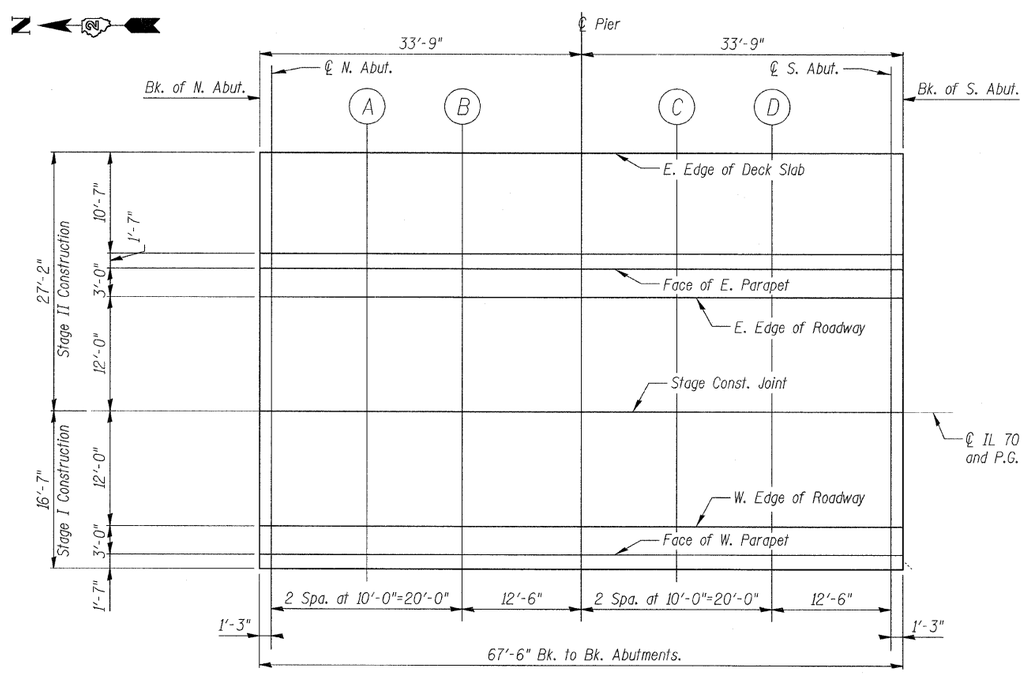

PLAN

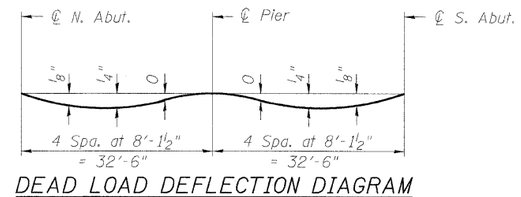

DEAD LOAD DEFLECTION DIAGRAM

(Includes weight of concrete only.)

Note:
The above deflections are not to be used in the field if the engineer is working from the grade elevations adjusted for dead load deflections as shown below.

TOP OF SLAB ELEVATIONS
SHEET 1
STRUCTURE NO. 101-0191

DESIGNED	MMH
CHECKED	RAD
DRAWN	R.VEJAR
CHECKED	RAD

HOH ENGINEERS, INC.
55 E. Jackson Blvd.
Chicago, Illinois 60604
312.346.8131
PROJECT # 2945

SHEET NO. 5	F.A.S. RTE.	SECTION	COUNTY	TOTAL SHEETS	SHEET NO.
21 SHEETS	55	(W-1-15d)BR-1	WINNEBAGO	59	25
			CONTRACT NO. 64D22		
	FED. ROAD DIST. NO.	ILLINOIS	FED. AID PROJECT		

STATE OF ILLINOIS
DEPARTMENT OF TRANSPORTATION

P.G. IL. 70 AND STAGE CONSTRUCTION LINE

Location	Station	Offset	Theoretical Grade Elevations	Theoretical Grade El. Adj. for D.L. Deflection
Bk. of N. Abut.	6220.45	0.00	766.41	766.41
Cl. N. Abutment	6221.70	0.00	766.42	766.42
A	6231.70	0.00	766.45	766.46
B	6241.70	0.00	766.48	766.49
Cl. of Pier	6254.20	0.00	766.52	766.52
C	6264.20	0.00	766.55	766.55
D	6274.20	0.00	766.58	766.60
Cl. S. Abutment	6286.70	0.00	766.63	766.63
Bk. of S. Abut.	6287.95	0.00	766.63	766.63

W. EDGE OF ROADWAY

Location	Station	Offset	Theoretical Grade Elevations	Theoretical Grade El. Adj. for D.L. Deflection
Bk. of N. Abut.	6220.45	12.00	766.23	766.23
Cl. N. Abutment	6221.70	12.00	766.23	766.23
A	6231.70	12.00	766.26	766.28
B	6241.70	12.00	766.29	766.30
Cl. of Pier	6254.20	12.00	766.33	766.33
C	6264.20	12.00	766.36	766.36
D	6274.20	12.00	766.39	766.41
Cl. S. Abutment	6286.70	12.00	766.44	766.44
Bk. of S. Abut.	6287.95	12.00	766.45	766.45

FACE OF W. PARAPET

Location	Station	Offset	Theoretical Grade Elevations	Theoretical Grade El. Adj. for D.L. Deflection
Bk. of N. Abut.	6220.45	15.00	766.18	766.18
Cl. N. Abutment	6221.70	15.00	766.18	766.18
A	6231.70	15.00	766.21	766.23
B	6241.70	15.00	766.24	766.26
Cl. of Pier	6254.20	15.00	766.28	766.28
C	6264.20	15.00	766.31	766.32
D	6274.20	15.00	766.34	766.36
Cl. S. Abutment	6286.70	15.00	766.39	766.39
Bk. of S. Abut.	6287.95	15.00	766.40	766.40

TOP OF SLAB ELEVATIONS
SHEET 2
STRUCTURE NO. 101-0191

DESIGNED	MMH
CHECKED	RAD
DRAWN	R.VEJAR
CHECKED	RAD

HOH ENGINEERS, INC.
55 E. Jackson Blvd.
Chicago, Illinois 60604
312.346.8131
PROJECT # 2945

SHEET NO. 6	F.A.S. RTE.	SECTION	COUNTY	TOTAL SHEETS	SHEET NO.
21 SHEETS	55	(W-1-15d)BR-1	WINNEBAGO	59	26
			CONTRACT NO. 64D22		
	FED. ROAD DIST. NO.	ILLINOIS	FED. AID PROJECT		

STATE OF ILLINOIS
DEPARTMENT OF TRANSPORTATION

E. EDGE OF SLAB

Location	Station	Offset	Theoretical Grade Elevations
End of N. Appr. Slab	6190.95	-27.16	765.90
A	6200.95	-27.16	765.93
B	6210.95	-27.16	765.96
End of Appr. Slab	6220.95	-27.16	765.99
N. Abutment			

FACE OF N.E. PARAPET

Location	Station	Offset	Theoretical Grade Elevations
End of N. Appr. Slab	6190.95	-15.00	766.09
A	6200.95	-15.00	766.12
B	6210.95	-15.00	766.15
End of Appr. Slab	6220.95	-15.00	766.18
N. Abutment			

ROADWAY P.G. & STAGE CONSTRUCTION LINE

Location	Station	Offset	Theoretical Grade Elevations
End of N. Appr. Slab	6190.95	0.00	766.33
A	6200.95	0.00	766.36
B	6210.95	0.00	766.39
End of Appr. Slab	6220.95	0.00	766.42
N. Abutment			

FACE OF N.W. PARAPET

Location	Station	Offset	Theoretical Grade Elevations
End of N. Appr. Slab	6190.950	15.000	766.096
A	6200.950	15.000	766.126
B	6210.950	15.000	766.156
End of Appr. Slab	6220.950	15.000	766.186
N. Abutment			

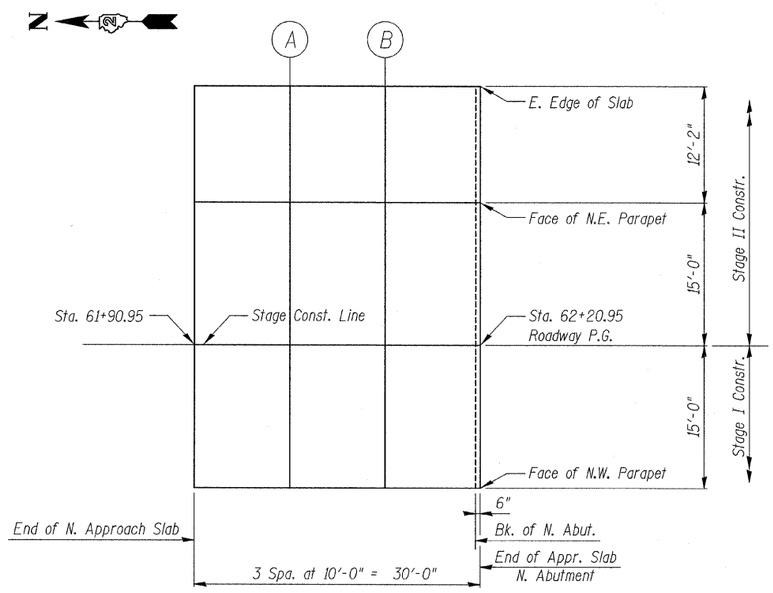

PLAN

TOP OF NORTH APPROACH
SLAB ELEVATIONS
STRUCTURE NO. 101-0191

DESIGNED	MMH
CHECKED	RAD
DRAWN	R.VEJAR
CHECKED	RAD

HOH ENGINEERS, INC.
55 E. Jackson Blvd.
Chicago, Illinois 60604
312.346.8131
PROJECT # 2945

SHEET NO. 7	F.A.S. RTE.	SECTION	COUNTY	TOTAL SHEETS	SHEET NO.
21 SHEETS	55	(W-1-15d)BR-1	WINNEBAGO	59	27
			CONTRACT NO. 64D22		
	FED. ROAD DIST. NO.	ILLINOIS	FED. AID PROJECT		

STATE OF ILLINOIS
DEPARTMENT OF TRANSPORTATION

E. EDGE OF SLAB

Location	Station	Offset	Theoretical Grade Elevations
End of Appr. Slab			
S. Abutment	6287.45	-27.16	766.21
A	6297.45	-27.16	766.26
B	6307.45	-27.16	766.34
End of S. Appr. Slab	6317.45	-27.16	766.42

FACE OF S.E. PARAPET

Location	Station	Offset	Theoretical Grade Elevations
End of Appr. Slab			
S. Abutment	6287.45	-15.00	766.40
A	6297.45	-15.00	766.45
B	6307.45	-15.00	766.53
End of S. Appr. Slab	6317.45	-15.00	766.61

ROADWAY P.G. & STAGE CONSTRUCTION LINE

Location	Station	Offset	Theoretical Grade Elevations
End of Appr. Slab			
S. Abutment	6287.45	0.00	766.63
A	6297.45	0.00	766.69
B	6307.45	0.00	766.76
End of S. Appr. Slab	6317.45	0.00	766.85

FACE OF S.W. PARAPET

Location	Station	Offset	Theoretical Grade Elevations
End of Appr. Slab			
S. Abutment	6287.45	15.00	766.40
A	6297.45	15.00	766.45
B	6307.45	15.00	766.53
End of S. Appr. Slab	6317.45	15.00	766.61

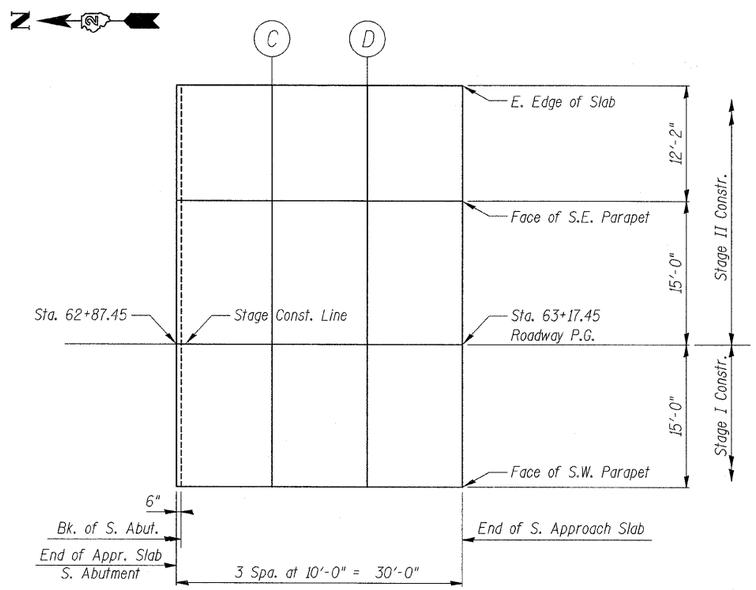

PLAN

TOP OF SOUTH APPROACH
SLAB ELEVATIONS
STRUCTURE NO. 101-0191

DESIGNED	MMH
CHECKED	RAD
DRAWN	R.VEJAR
CHECKED	RAD

HOH ENGINEERS, INC.
59 E. Jackson Blvd.
Chicago, Illinois 60604
312.345.8131
PROJECT # 2945

SHEET NO. 8	F.A.S. RTE.	SECTION	COUNTY	TOTAL SHEETS	SHEET NO.
	55	(W-1-15d)BR-1	WINNEBAGO	59	28
21 SHEETS			CONTRACT NO. 64D22		
	FED. ROAD DIST. NO.	ILLINOIS	FED. AID PROJECT		

STATE OF ILLINOIS
DEPARTMENT OF TRANSPORTATION

NOTE:
See sheet 10 of 21 for Sections C-C & D-D, View E-E and G-G.

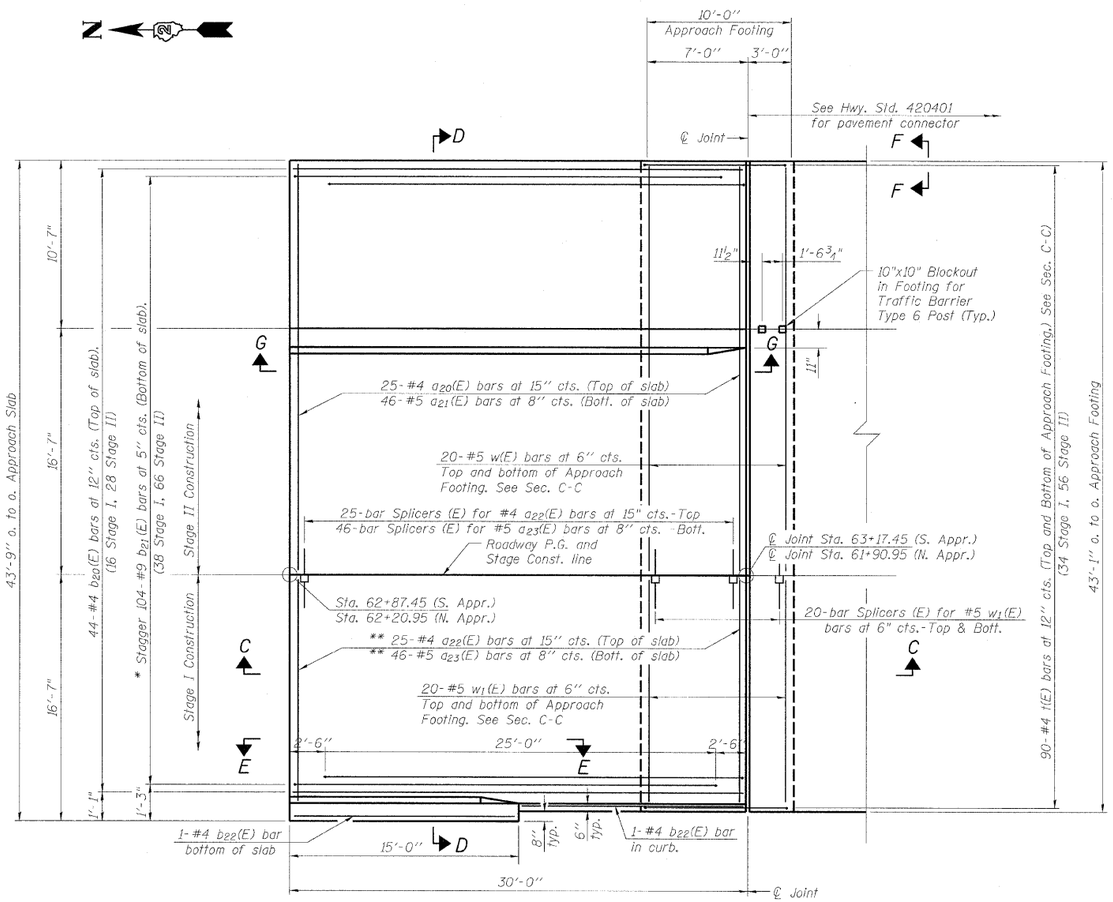

PLAN

* Tilt #9 b_{21}(E) bars as required to maintain clearance.
** Cut to fit at curb.

South Approach Slab as shown
North Approach Slab similar
and opposite hand.

*** Cost included with Concrete Superstructure.

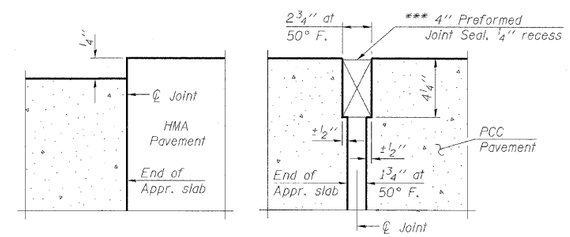

FLEXIBLE PAVEMENT

RIGID PAVEMENT

DETAIL A

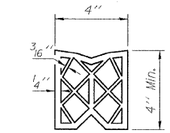

PREFORMED
JOINT SEAL

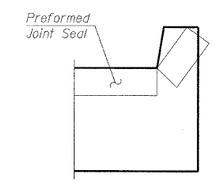

VIEW F-F

Angle Preformed Joint Seal at 45°
at curbs when req'd. for drainage.

DESIGNED	MMH
CHECKED	RAD
DRAWN	R.VEJAR
CHECKED	RAD

HOH ENGINEERS, INC.
55 E. Jackson Blvd.
Chicago, Illinois 60604
312.346.8131
PROJECT # 2945

BRIDGE APPROACH SLAB
DETAILS SHEET 1
STRUCTURE NO. 101-0191

SHEET NO. 9	F.A.S. RTE.	SECTION	COUNTY	TOTAL SHEETS	SHEET NO.
21 SHEETS	55	(W-1-15d)BR-1	WINNEBAGO	59	29
			CONTRACT NO. 64D22		
	FED. ROAD DIST. NO.	ILLINOIS	FED. AID PROJECT		

STATE OF ILLINOIS
DEPARTMENT OF TRANSPORTATION

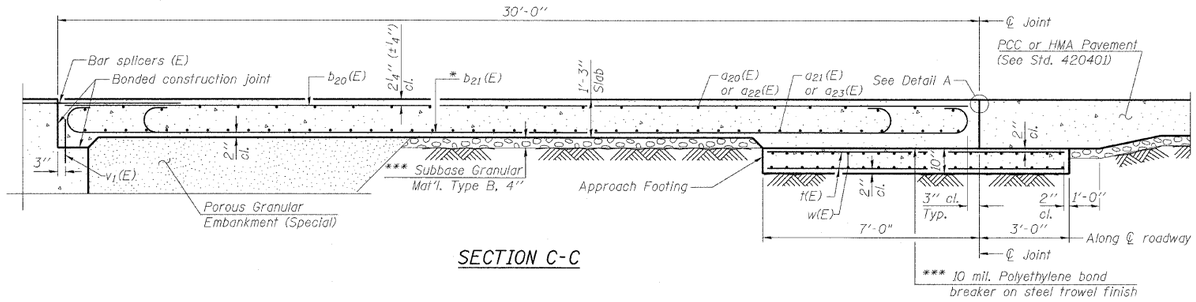

SECTION C-C

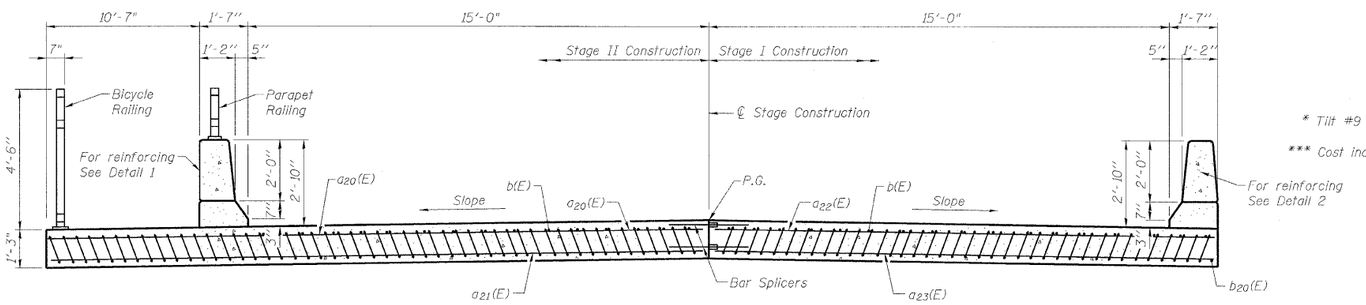

SECTION D-D
(See Plan for dimensions not shown)

* Tilt #9 $b_1(E)$ bars as required to maintain clearance.

*** Cost included with Concrete Superstructure.

NOTES:
Approach slab and parapet concrete shall be paid for as Concrete Superstructure.
Approach footing concrete shall be paid for as Concrete Structures.
Reinforcement shall be paid for as Reinforcement Bars, Epoxy Coated.
For $v_1(E)$ bar details, see sheet 13 of 21.
The approach footing maximum applied service bearing pressure (Qmax) = 2.0 ksf.
For bar splicer details, see sheet 18 of 21.
Cost of excavation for approach footing included with Concrete Structures.
For Porous Granular Embankment (Special) and drainage treatment details, see sheet 1 of 21.

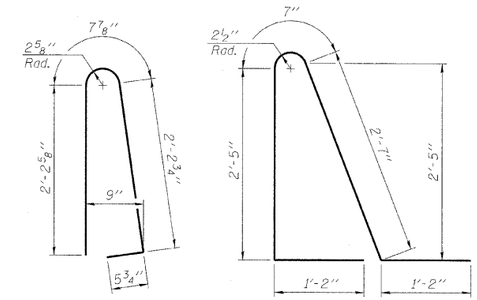

BAR d(E)

BAR $d_2(E)$

TWO APPROACHES
BILL OF MATERIAL

Bar	No.	Size	Length	Shape
$a_{20}(E)$	50	#4	26'-10"	
$a_{21}(E)$	92	#5	26'-10"	
$a_{22}(E)$	50	#4	15'-11"	
$a_{23}(E)$	92	#5	15'-7"	
$b_{20}(E)$	88	#4	29'-8"	
$b_{21}(E)$	208	#9	29'-9"	
$b_{22}(E)$	4	#4	14'-8"	
d(E)	102	#5	5'-7"	
$d_2(E)$	102	#5	7'-11"	
$e_{20}(E)$	42	#4	14'-8"	
$e_{21}(E)$	2	#8	14'-8"	
$e_{22}(E)$	2	#8	29'-8"	
$e_{23}(E)$	2	#4	29'-8"	
t(E)	180	#4	9'-8"	
w(E)	80	#5	26'-2"	
$w_1(E)$	80	#5	15'-7"	
Concrete Superstructure			Cu. Yd.	120.1
Concrete Structures			Cu. Yd.	26.2
Reinforcement Bars, Epoxy Coated			Pound	35,120

For Bar Splicers, see Sheet 18 Of 21.

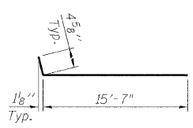

BAR $a_{22}(E)$
Bend at Curb only

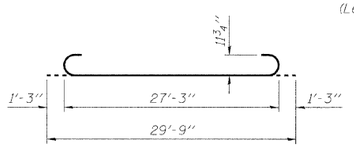

BAR $b_{21}(E)$

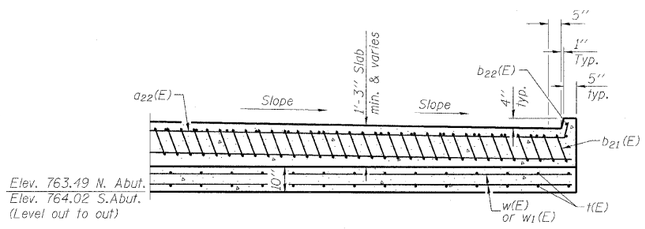

SECTION
AT APPROACH FOOTING

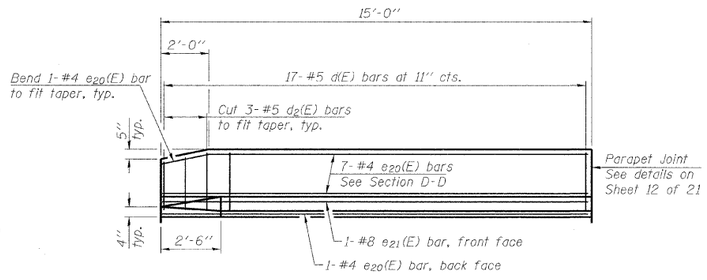

VIEW E-E

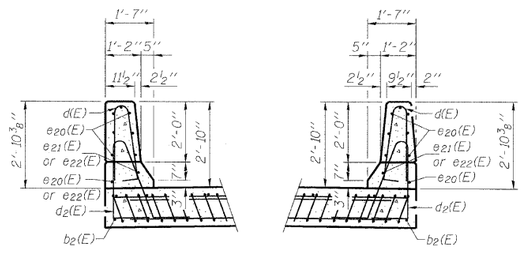

DETAIL 1

DETAIL 2

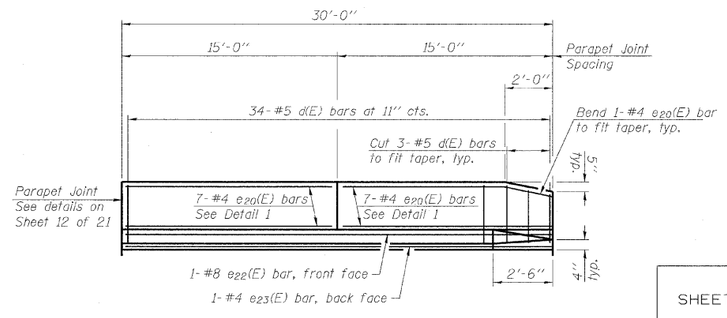

VIEW G-G

BRIDGE APPROACH SLAB
DETAILS SHEET 2
STRUCTURE NO. 101-0191

DESIGNED	MMH
CHECKED	RAD
DRAWN	R.VEJAR
CHECKED	RAD

HOH ENGINEERS, INC.
55 E. Jackson Blvd.
Chicago, Illinois 60604
312.346.8131
PROJECT # 2945

SHEET NO. 10	F.A.S. RTE.	SECTION	COUNTY	TOTAL SHEETS	SHEET NO.
21 SHEETS	55	(W-1-15d)BR-1	WINNEBAGO	59	30
			CONTRACT NO. 64D22		
	FED. ROAD DIST. NO.	ILLINOIS	FED. AID PROJECT		

STATE OF ILLINOIS
DEPARTMENT OF TRANSPORTATION

NOTE:
for Section A-A & Section B-B
see Sht. 13 of 21.

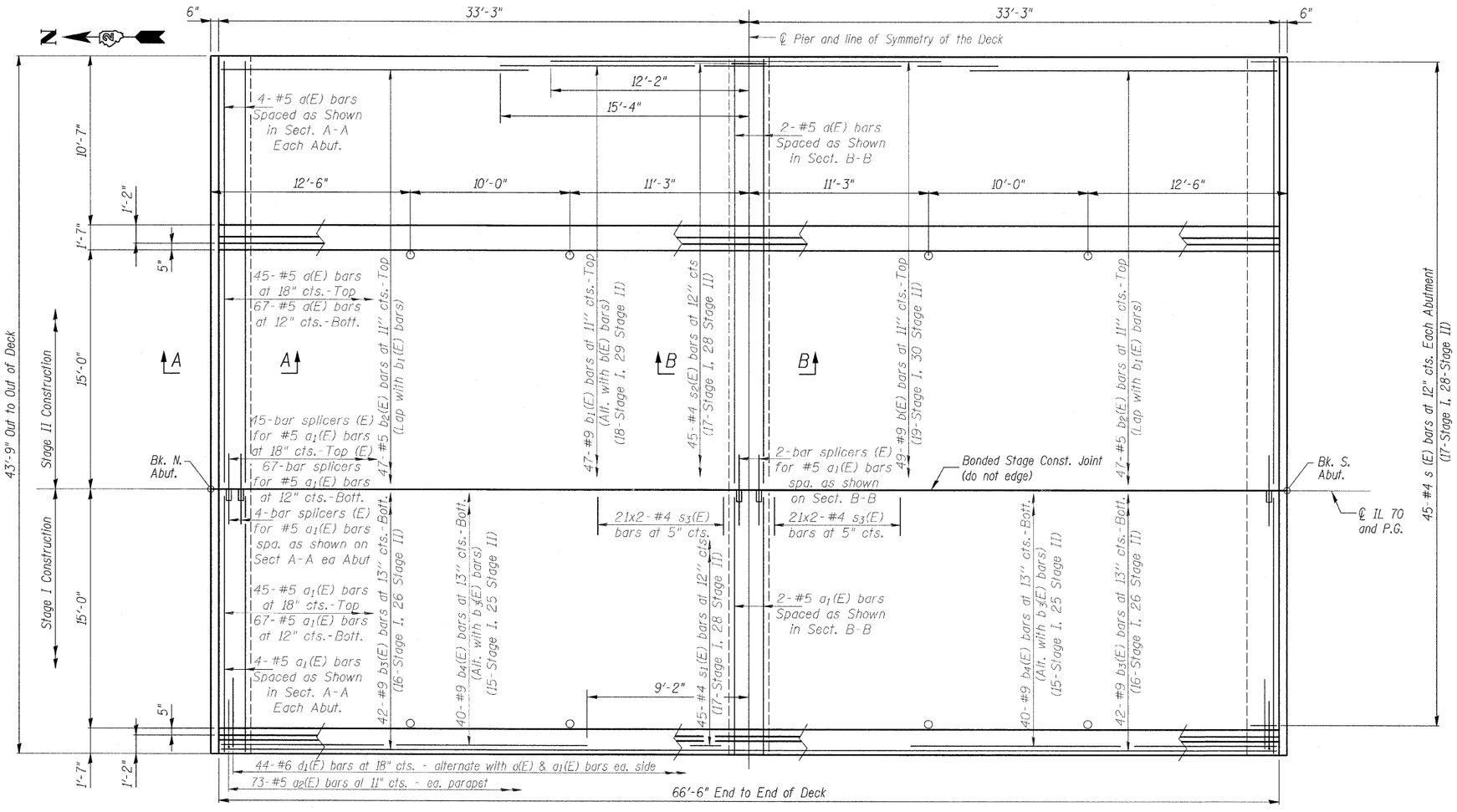

DECK PLAN

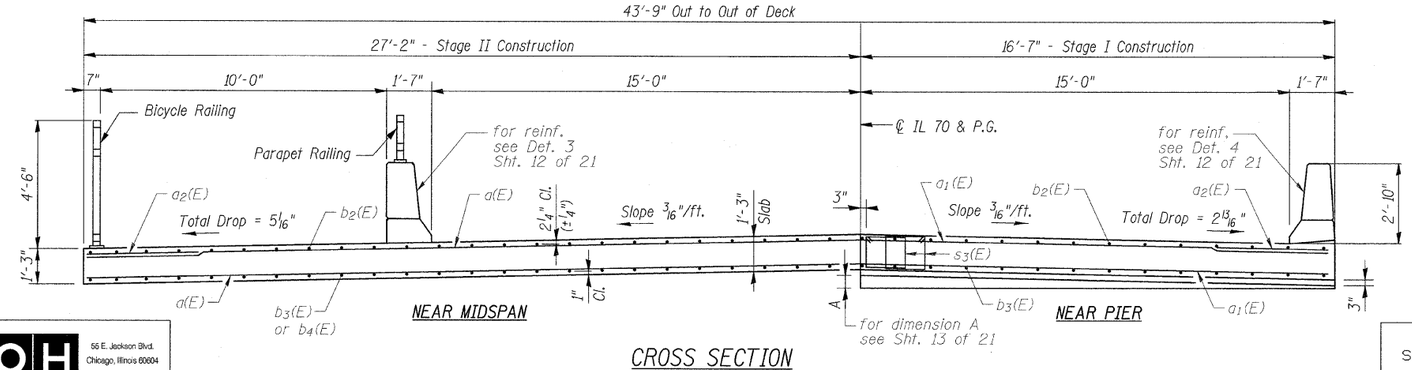

CROSS SECTION
(Looking South)

SUPERSTRUCTURE
STRUCTURE NO. 101-0191

DESIGNED	MMH
CHECKED	RAD
DRAWN	R.VEJAR
CHECKED	RAD

HOH ENGINEERS, INC.
55 E. Jackson Blvd.
Chicago, Illinois 60604
312.346.8131
PROJECT # 2945

SHEET NO. 11	F.A.S. RTE.	SECTION	COUNTY	TOTAL SHEETS	SHEET NO.
21 SHEETS	55	(W-1-15d)BR-1	WINNEBAGO	59	31
			CONTRACT NO. 64D22		
	FED. ROAD DIST. NO.	ILLINOIS	FED. AID PROJECT		

STATE OF ILLINOIS
DEPARTMENT OF TRANSPORTATION

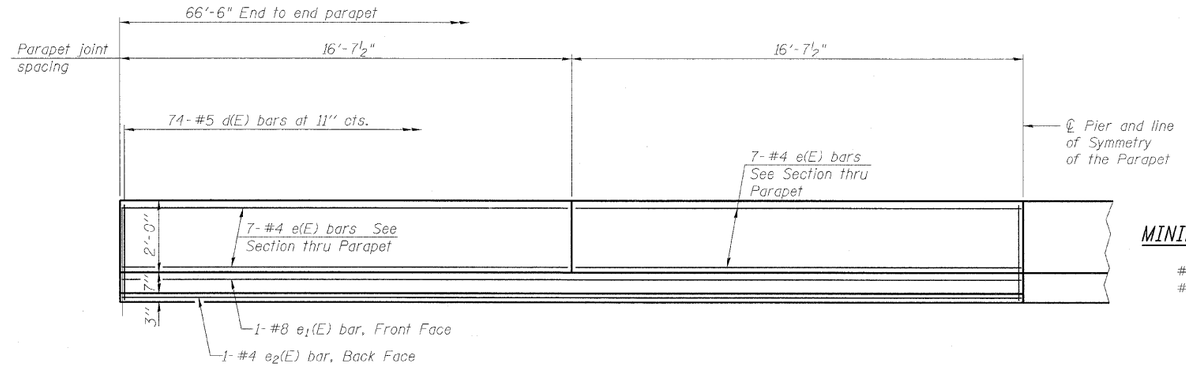

INSIDE ELEVATION OF PARAPET

(East Parapet is shown, West Parapet similar, opposite hand)

MINIMUM BAR LAP
(Parapet)
#4 bar = 1'-4"
#8 bar = 3'-5"

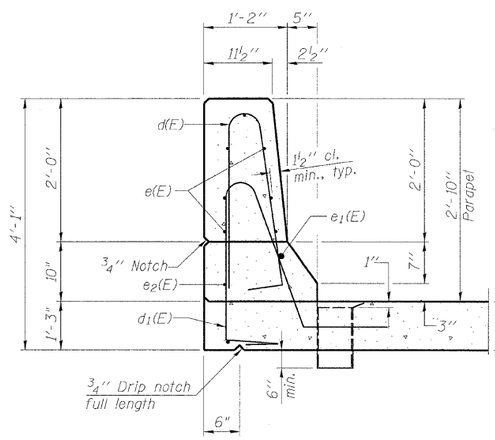

DETAIL 3
SECTION THRU PARAPET

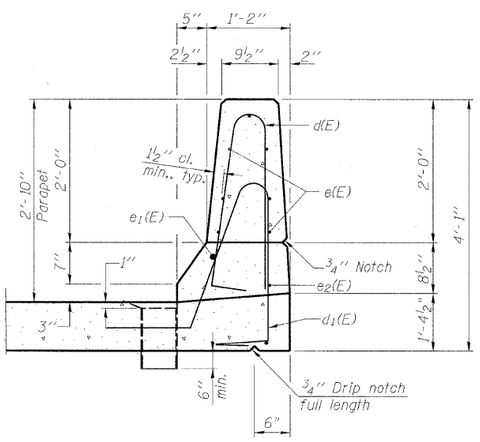

DETAIL 4
SECTION THRU PARAPET

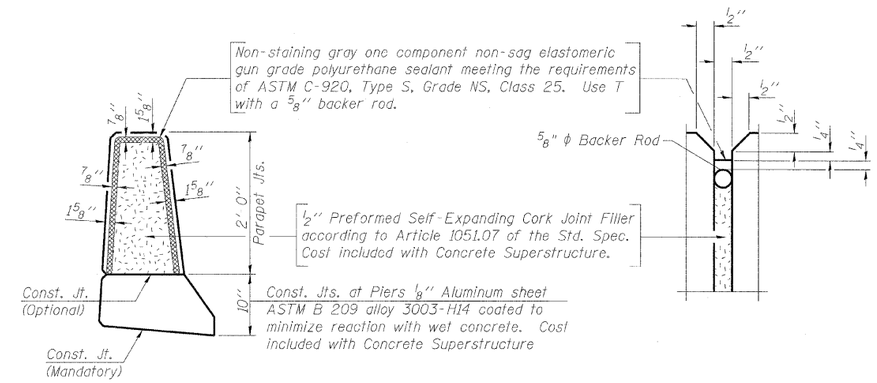

PARAPET JOINT DETAILS

Note:
The exterior surfaces of the floor drains shall be coated or pigmented by the manufacturer with a color that matches the concrete. Fiberglass pipe shall conform to ASTM D 2996, with short-time rupture strength hoop tensile stress of 30,000 p.s.i. minimum.

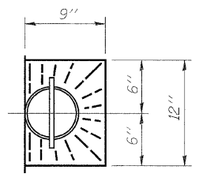

TOP PLAN

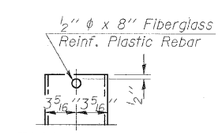

FIBERGLASS PIPE

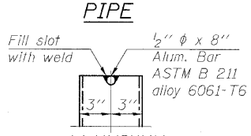

ALUMINUM TUBE

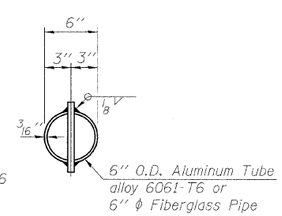

TOP PLAN
(Showing Aluminum Tube)

DESIGNED	MMH
CHECKED	RAD
DRAWN	R.VEJAR
CHECKED	RAD

S-I-D 10-1-08

HOH ENGINEERS, INC.
55 E. Jackson Blvd.
Chicago, Illinois 60604
312.346.8131
PROJECT # 2945

SUPERSTRUCTURE DETAILS
SHEET 1
STRUCTURE NO. 101-0191

SHEET NO. 12	F.A.S. RTE.	SECTION	COUNTY	TOTAL SHEETS	SHEET NO.
21 SHEETS	55	(W-1-15d)BR-1	WINNEBAGO	59	32
			CONTRACT NO. 64D22		
	FED. ROAD DIST. NO.	ILLINOIS	FED. AID PROJECT		

STATE OF ILLINOIS
DEPARTMENT OF TRANSPORTATION

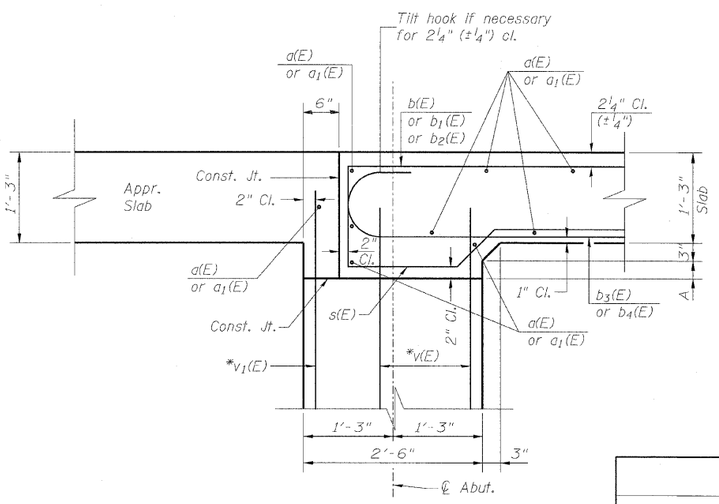

SECTION A-A

* v(E) and v1(E) bars billed with abutments, See sheet 15 of 21.

DIMENSION "A"

	N. Abut.	Pier	S. Abut.
West edge of Bridge	4 7/8"	4 7/8"	4 3/4"
℄ Roadway & P.G.	7 1/8"	7 1/8"	7"
East edge of Bridge	2"	2"	2"

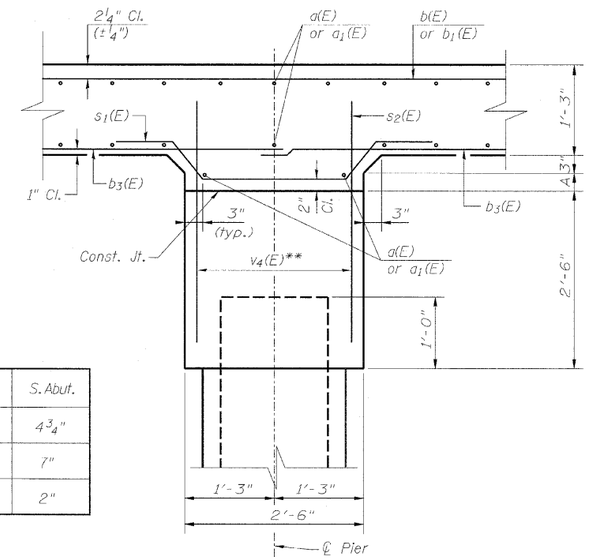

SECTION B-B

** v4(E) bars billed with pier, See sheet 17 of 21.

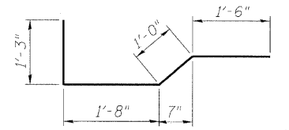

BAR s(E)

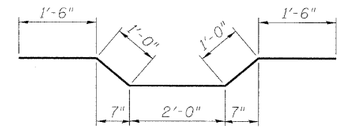

BAR s1(E)

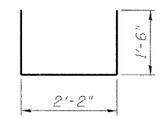

BAR s2(E)

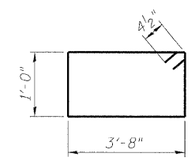

BAR s3(E)

SUPERSTRUCTURE BILL OF MATERIAL

Bar	No.	Size	Length	Shape
d(E)	122	#5	26'-10"	
d1(E)	122	#5	16'-3"	
d2(E)	90	#6	6'-0"	
b(E)	49	#9	24'-4"	
b1(E)	47	#9	30'-8"	
b2(E)	94	#5	19'-5"	
b3(E)	84	#9	33'-7"	
b4(E)	80	#9	23'-9"	
d(E)	148	#5	5'-7"	
d1(E)	148	#5	7'-8"	
e(E)	56	#4	16'-3"	
e1(E)	4	#8	32'-11"	
e2(E)	4	#4	32'-11"	
s(E)	90	#4	5'-5"	
s1(E)	45	#4	7'-0"	
s2(E)	45	#4	5'-2"	
s3(E)	84	#4	10'-1"	
Reinforcement Bars, Epoxy Coated			Pound	37.550
Concrete Superstructure			Cu. Yds.	165.4

Bars indicated thus 1 x 3-#5 etc. indicates 1 line of bars with 3 lengths per line.
For Bar Splicers see Sheet 18 of 21.

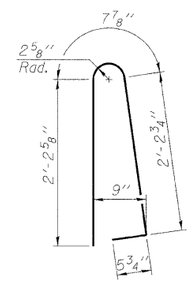

BAR d(E)

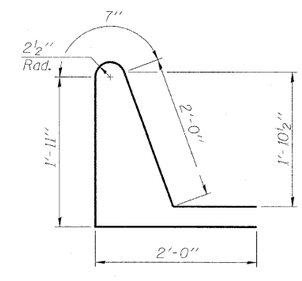

BAR d1(E)

SUPERSTRUCTURE DETAILS
SHEET 2
STRUCTURE NO. 101-0191

DESIGNED	MMH
CHECKED	RAD
DRAWN	R.VEJAR
CHECKED	RAD

HOH ENGINEERS, INC.
55 E. Jackson Blvd.
Chicago, Illinois 60604
312.346.8131
PROJECT # 2945

SHEET NO. 13	F.A.S. RTE.	SECTION	COUNTY	TOTAL SHEETS	SHEET NO.
21 SHEETS	55	(W-1-15d)BR-1	WINNEBAGO	59	33
			CONTRACT NO. 64D22		
	FED. ROAD DIST. NO.	ILLINOIS	FED. AID PROJECT		

STATE OF ILLINOIS
DEPARTMENT OF TRANSPORTATION

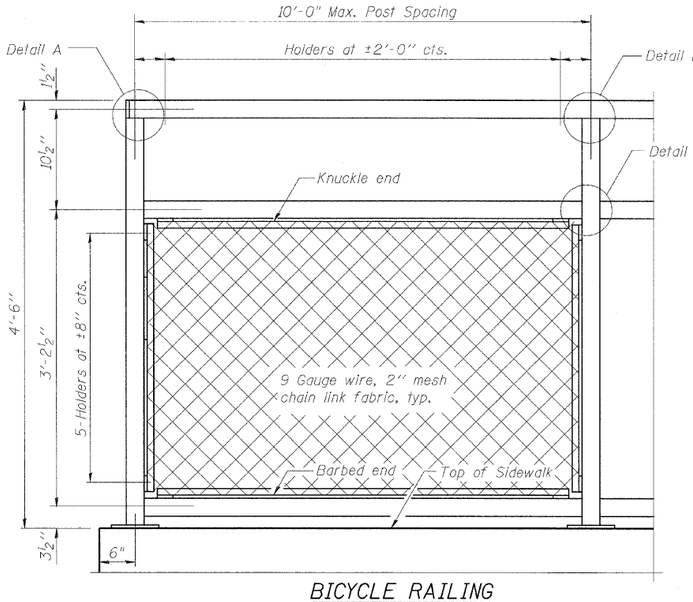

BICYCLE RAILING

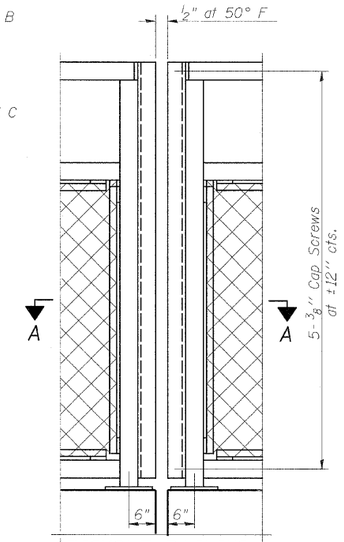

BICYCLE RAILING

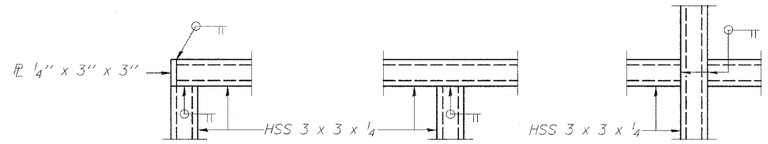

DETAIL A DETAIL B DETAIL C

NOTE:
All steel rail elements shall be galvanized according to Article 509.05 of the Standard Specifications.

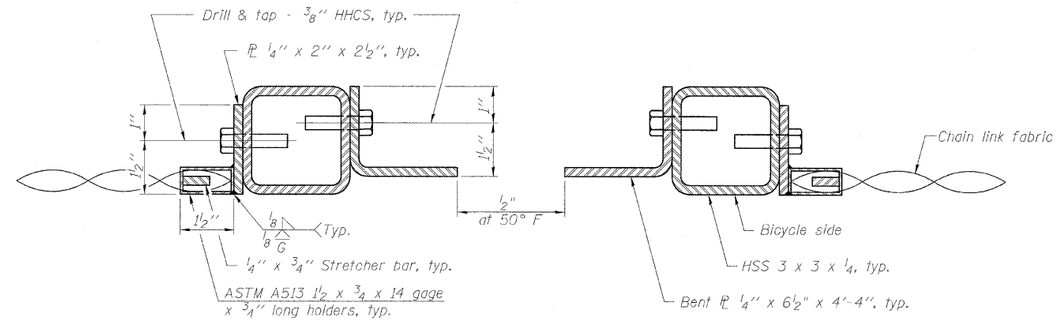

SECTION A-A

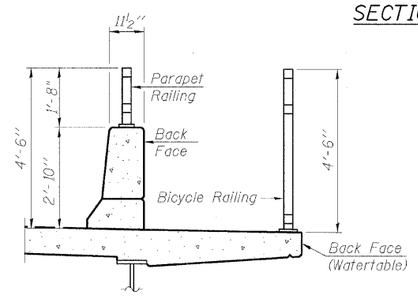

SECTION THRU DECK

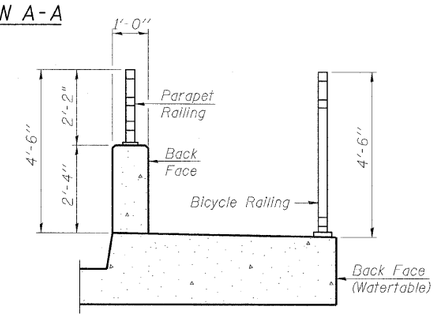

SECTION THRU SIDEWALK

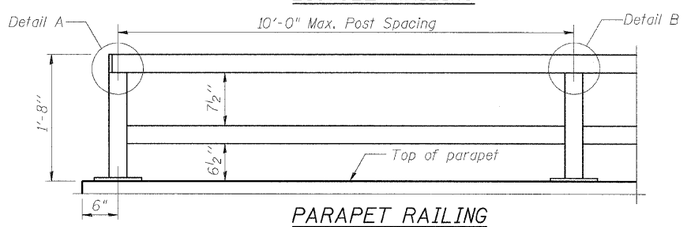

PARAPET RAILING ELEVATION
(Inside Face of Two Element Rail)

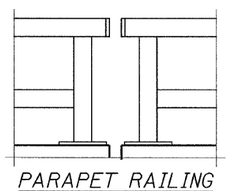

PARAPET RAILING ELEVATION AT EXPANSION JOINT
(Two Element Rail Shown - Three Element Rail Similar)

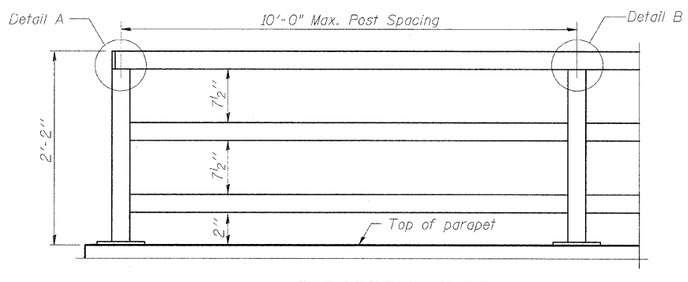

PARAPET RAILING ELEVATION
(Inside Face of Three Element Rail)

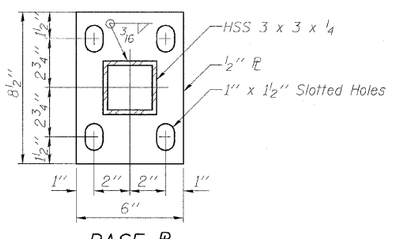

BASE PL

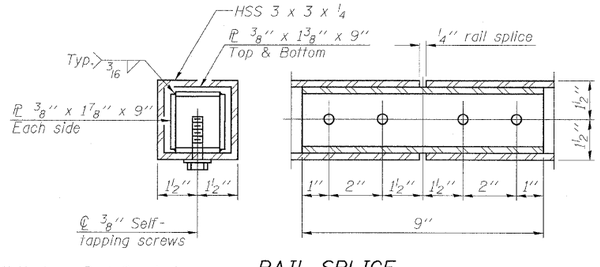

(10'-0" Maximum Post Spacing)

RAIL SPLICE

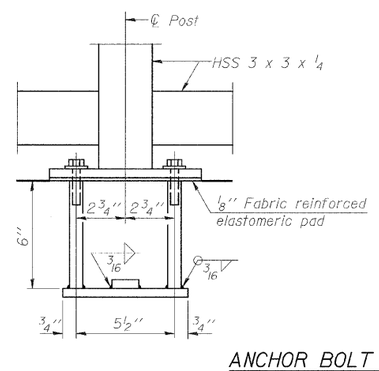

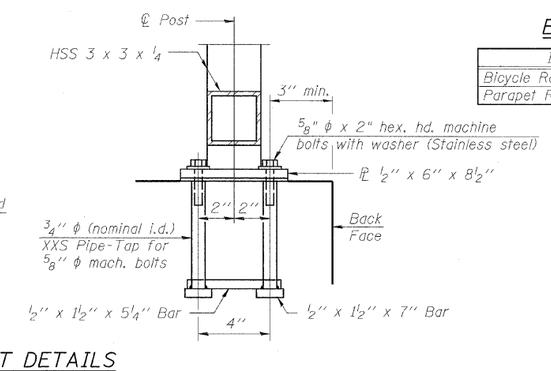

ANCHOR BOLT DETAILS

In lieu of the cast-in-place anchor device shown, the Contractor has the option of drilling and setting ⅝" ϕ anchor rods according to Article 509.06 of the Standard Specifications. Embedment shall be according to the manufacturer's specifications.

BILL OF MATERIAL

Item	Unit	Quantity
Bicycle Railing	Foot	128
Parapet Railing	Foot	128

BICYCLE RAILING
STRUCTURE NO. 101-0191

DESIGNED	MMH
CHECKED	RAD
DRAWN	R.VEJAR
CHECKED	RAD

R-29 10-1-08

HOH ENGINEERS, INC.
55 E. Jackson Blvd.
Chicago, Illinois 60604
312.346.8131
PROJECT # 2945

SHEET NO. 14	F.A.S. RTE.	SECTION	COUNTY	TOTAL SHEETS	SHEET NO.
21 SHEETS	55	(W-1-15d)BR-1	WINNEBAGO	59	34
			CONTRACT NO. 64D22		
	FED. ROAD DIST. NO.	ILLINOIS	FED. AID PROJECT		

STATE OF ILLINOIS
DEPARTMENT OF TRANSPORTATION

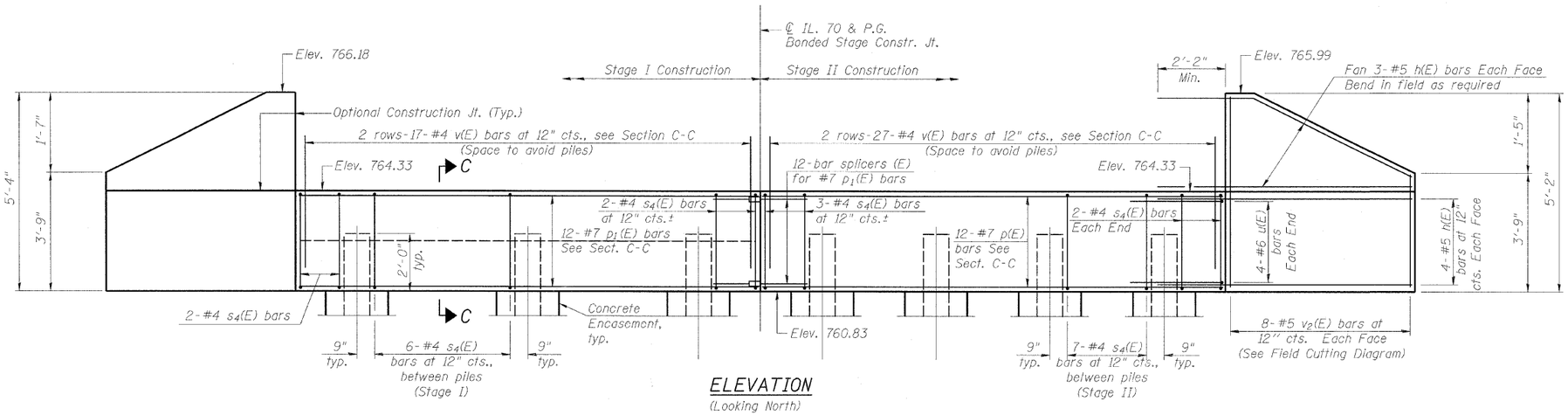

ELEVATION
(Looking North)

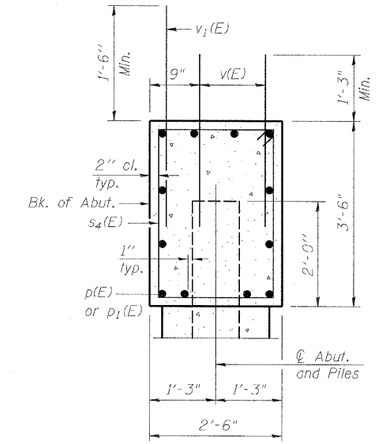

SECTION C-C

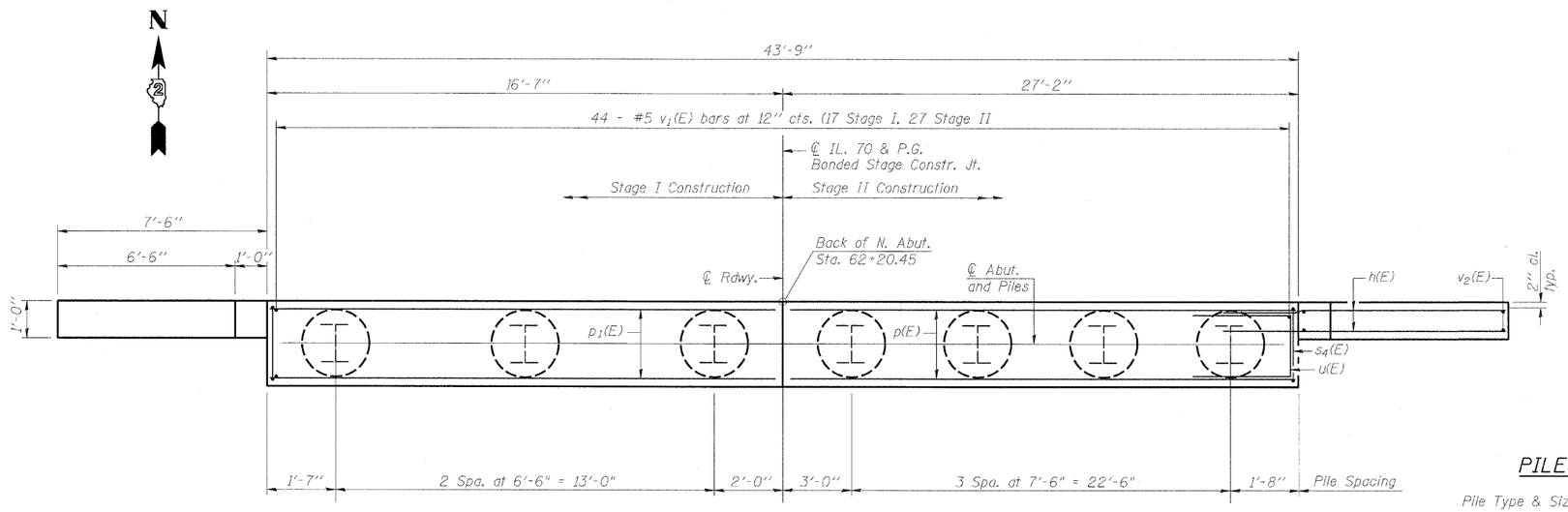

PLAN

PILE DATA

Pile Type & Size: Steel - HP12X53
Nominal Required Bearing: RN = 404 kips
Factored Resistance Available: RF = 156 kips
Estimated Pile Length: 79'-0"
Number of Production Piles: 7

BILL OF MATERIAL

Bar	No.	Size	Length	Shape
h(E)	56	#5	9'-6"	
p(E)	24	#7	26'-10"	
p1(E)	24	#7	16'-3"	
s4(E)	82	#4	11'-5"	
u(E)	16	#6	11'-1"	
v(E)	176	#5	2'-9"	
v1(E)	88	#5	4'-4"	
v2(E)	64	#5	8'-4"	
Structure Excavation		Cu. Yd.	58	
Concrete Structures		Cu. Yd.	33.5	
Reinforcement Bars, Epoxy Coated		Pound	5,020	
Furnishing Steel Piles HP12x53		Foot	896	
Driving Piles		Foot	896	
Test Pile HP12x53		Each	1	
Concrete Encasement		Cu. Yd.	5.2	

For Bar Splicers, see sheet 18 of 21.
For details of piles and Concrete Encasement, see sheet 19 of 21.
Bill of material shown includes both abutments.

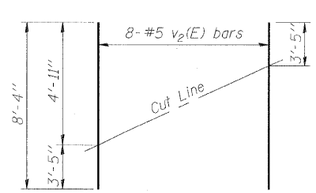

FIELD CUTTING DIAGRAM
Order v2(E) full length. Cut as shown and use remainder of bars in opposite face. (Each Wing Wall)

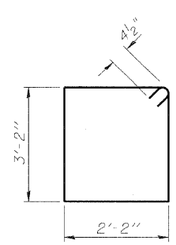

BAR s4(E)

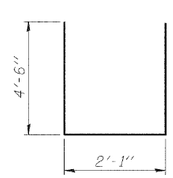

BAR u(E)

NORTH ABUTMENT
STRUCTURE NO. 101-0191

DESIGNED	MMH		
CHECKED	RAD		
DRAWN	R.VEJAR		
CHECKED	RAD		

AI-0 10-1-08

HOH ENGINEERS, INC.
55 E. Jackson Blvd.
Chicago, Illinois 60604
312.346.8131
PROJECT # 2945

SHEET NO. 15	F.A.S. RTE.	SECTION	COUNTY	TOTAL SHEETS	SHEET NO.
21 SHEETS	55	(W-1-15d)BR-1	WINNEBAGO	59	35
	FED. ROAD DIST. NO.	ILLINOIS	FED. AID PROJECT	CONTRACT NO. 64D22	

STATE OF ILLINOIS
DEPARTMENT OF TRANSPORTATION

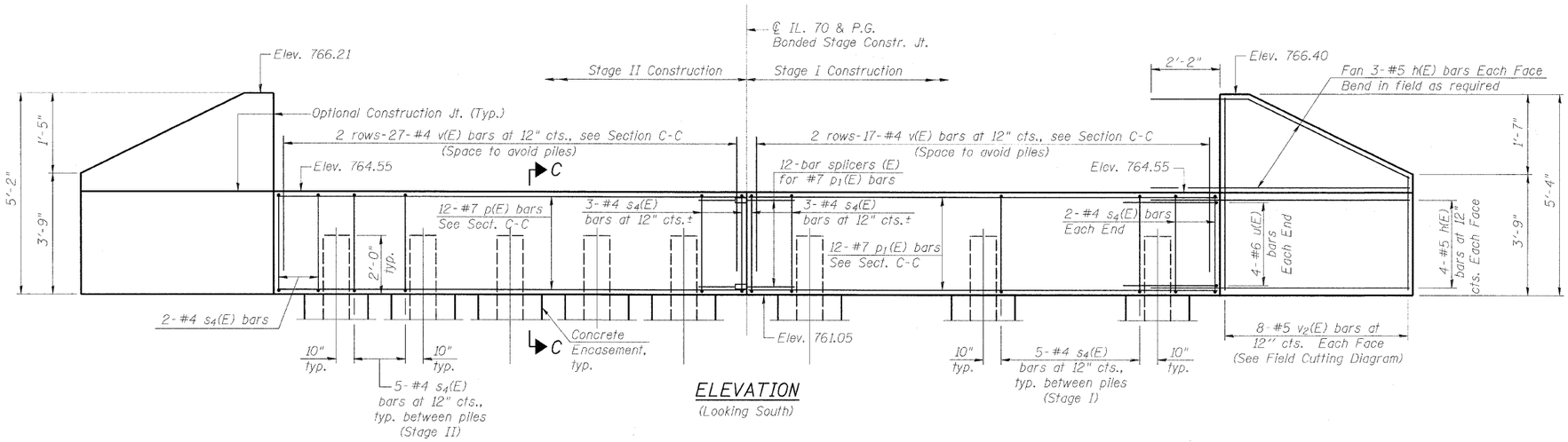

ELEVATION
(Looking South)

NOTE:

For bill of material, Section C-C and field cutting diagram for bar $v_2(E)$ see Sheet 15 of 21.

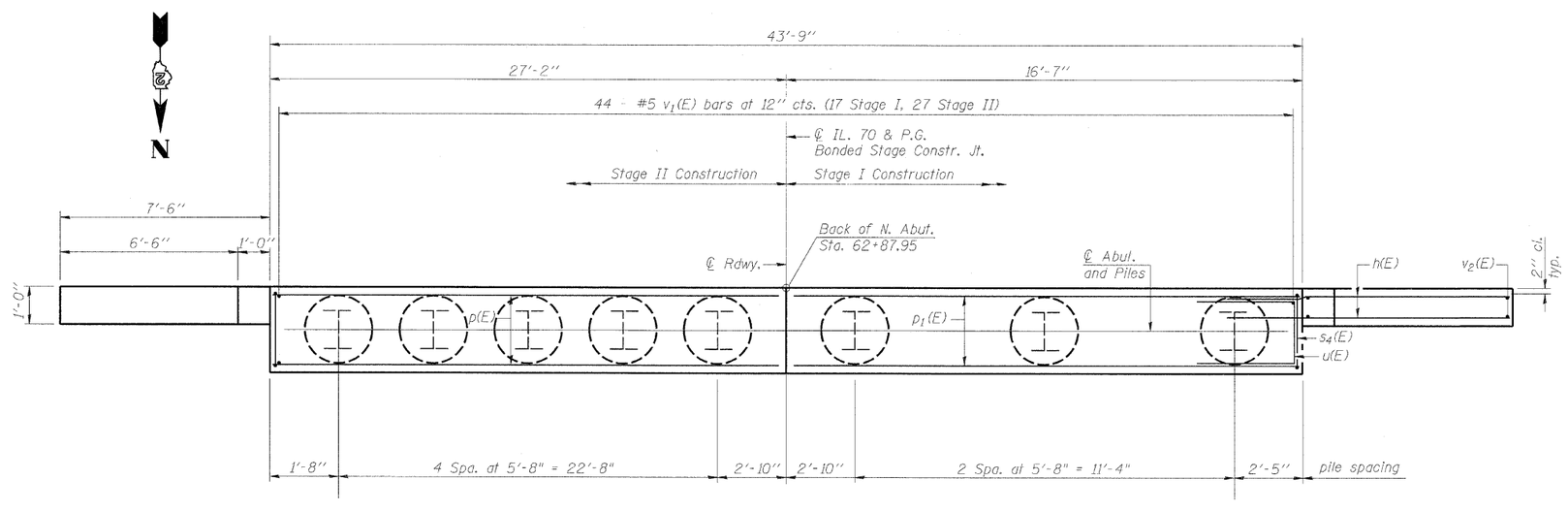

PLAN

PILE DATA

Pile Type & Size: Steel - HP12X53
Nominal Required Bearing: RN = 320 kips
Factored Resistance Available: RF = 104 kips
Estimated Pile Length: 49'-0"
Number of Production Piles: 7
Number of Test Piles: 1

DESIGNED	MMH
CHECKED	RAD
DRAWN	R.VEJAR
CHECKED	RAD

AI-0 10-1-08

HOH ENGINEERS, INC.
55 E. Jackson Blvd.
Chicago, Illinois 60604
312.346.8131
PROJECT # 2945

SOUTH ABUTMENT
STRUCTURE NO. 101-0191

SHEET NO. 16	F.A.S. RTE.	SECTION	COUNTY	TOTAL SHEETS	SHEET NO.
21 SHEETS	55	(W-1-15d)BR-1	WINNEBAGO	59	36
			CONTRACT NO. 64D22		
	FED. ROAD DIST. NO.	ILLINOIS	FED. AID PROJECT		

STATE OF ILLINOIS
DEPARTMENT OF TRANSPORTATION

Note:
Reinforcement bars desinated (E) shall be epoxy coated
all edges shall have $\frac{3}{4}$" chamfers unless otherwise noted.

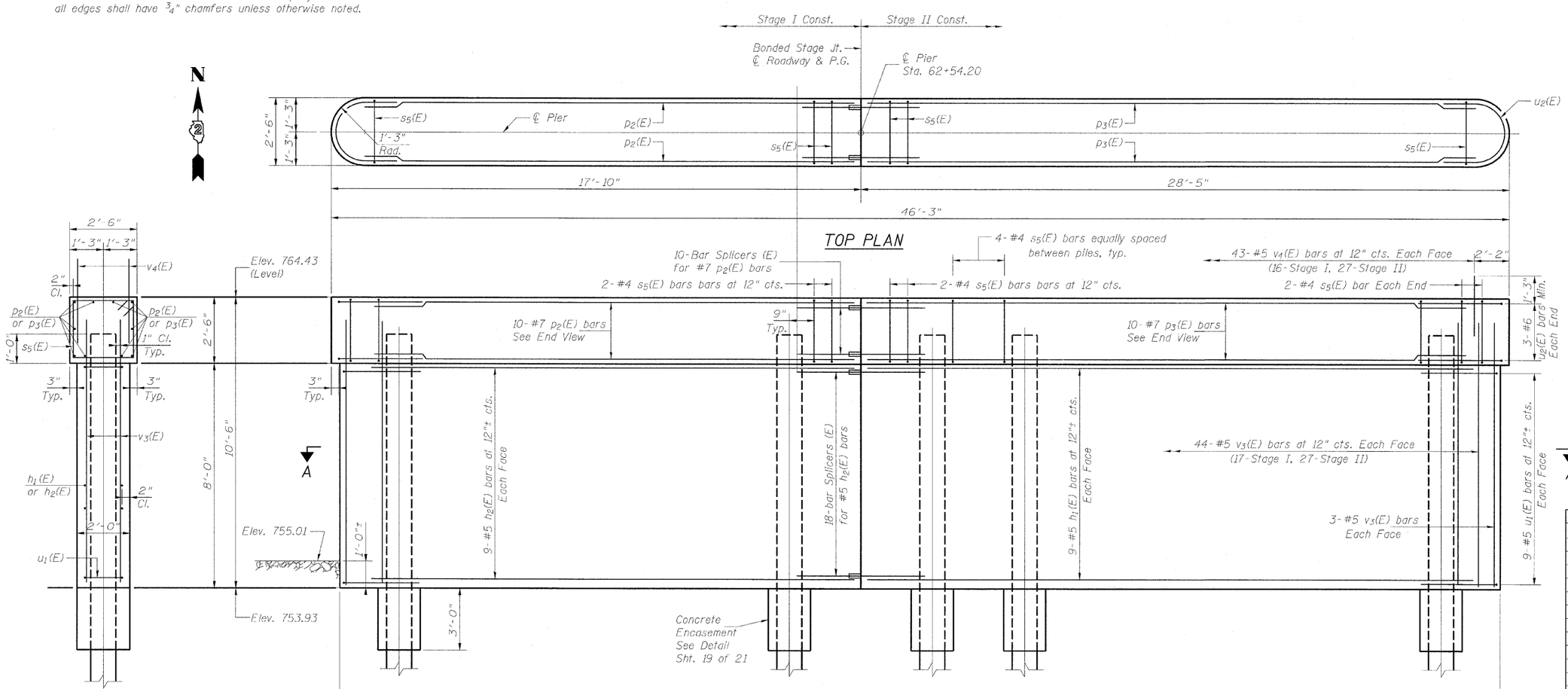

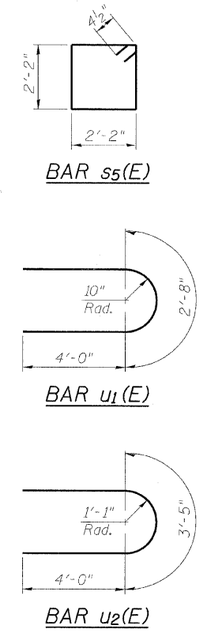

BILL OF MATERIAL

Bar	No.	Size	Length	Shape
h1(E)	18	#5	27'-0"	
h2(E)	18	#5	16'-5"	
p2(E)	10	#7	16'-5"	
p3(E)	10	#7	27'-0"	
s5(E)	40	#4	9'-5"	
u1(E)	18	#6	10'-8"	
u2(E)	6	#6	11'-5"	
v3(E)	94	#5	9'-9"	
v4(E)	86	#5	2'-9"	
Structure Excavation		Cu. Yd.	7	
Concrete Structures		Cu. Yd.	37.7	
Reinforcement Bars, Epoxy Coated		Pound	3,550	
Furnishing Steel Piles HP12x53		Foot	612	
Driving Piles		Foot	612	
Test Pile HP12x53		Each	1	
Concrete Encasement		Cu. Yd.	3.5	

Bars indicated thus 1 x 3-#5 etc. indicates 1 line of bars with 3 lengths per line.
For Bar Splicers see Sheet 18 of 21.

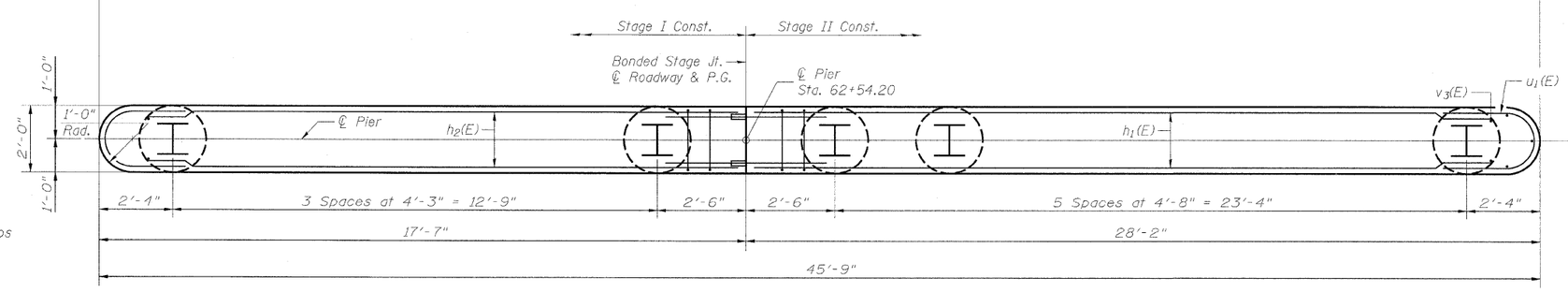

SECTION A-A

PILE DATA

Pile Type & Size: Steel - HP12X53
Nominal Required Bearing: RN = 372 kips
Factored Resistance Available: RF = 148 kips
Estimated Pile Length: 68'-0"
Number of Production Piles: 9
Number of Test Piles: 1

NOTE:
If a portion of the pier wall or concrete encasement is under water, reinforcement may be placed underwater into forms. Concrete shall be tremied according to article 503.08 of the Standard Specifications to an elevation of 1'-0" above the water line at the time of construction.

PIER
STRUCTURE NO. 101-0191

DESIGNED	MMH
CHECKED	RAD
DRAWN	R.VEJAR
CHECKED	RAD

HOH ENGINEERS, INC.
55 E. Jackson Blvd.
Chicago, Illinois 60604
312.346.8131
PROJECT # 2945

SHEET NO. 17	F.A.S. RTE.	SECTION	COUNTY	TOTAL SHEETS	SHEET NO.
21 SHEETS	55	(W-1-15d)BR-1	WINNEBAGO	59	37
			CONTRACT NO. 64D22		
	FED. ROAD DIST. NO.	ILLINOIS	FED. AID PROJECT		

STATE OF ILLINOIS
DEPARTMENT OF TRANSPORTATION

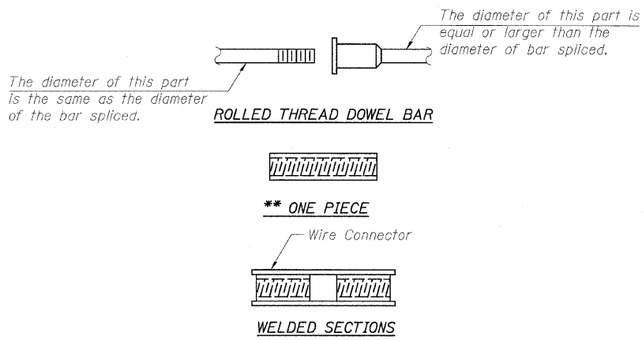

BAR SPLICER ASSEMBLY ALTERNATIVES

**Heavy Hex Nuts conforming to ASTM A 563, Grade C, D or DH may be used.

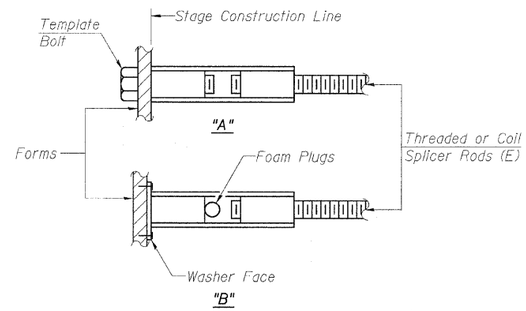

INSTALLATION AND SETTING METHODS

"A" : Set bar splicer assembly by means of a template bolt.
"B" : Set bar splicer assembly by nailing to wood forms or cementing to steel forms.
(E) : Indicates epoxy coating.

NOTES

Bar splicer assemblies shall be of an approved type and shall develop in tension at least 125 percent of the yield strength of the lapped reinforcement bars.

Splicer rods shall be of minimum 60 ksi yield strength, threaded or coiled full length.

All reinforcement bars shall be lapped and tied to the splicer rods or dowel bars.

Bar splicer assemblies shall be epoxy coated according to the requirements for reinforcement bars.

Other systems of similar design may be submitted to the Engineer for approval. Approval shall be based on certified test results from an approved testing laboratory that the proposed bar splicer assembly satisfies the following requirements:

1. Minimum Capacity (Tension in kips) = $1.25 \times f_y \times A_t$
2. Minimum *Pull-out Strength (Tension in kips) = $0.66 \times f_y \times A_t$

Where f_y = Yield strength of lapped reinforcement bars in ksi.
A_t = Tensile stress area of lapped reinforcement bars.
* = 28 day concrete

BAR SPLICER ASSEMBLIES			
Bar Size to be Spliced	Splicer Rod or Dowel Bar Length	Strength Requirements	
		Min. Capacity kips - tension	Min. Pull-Out Strength kips - tension
#4	1'-8"	14.7	7.9
#5	2'-2"	23.0	12.3
#6	2'-7"	33.1	17.4
#7	3'-5"	45.1	23.8
#8	4'-6"	58.9	31.3
#9	5'-9"	75.0	39.6
#10	7'-3"	95.0	50.3
#11	9'-0"	117.4	61.8

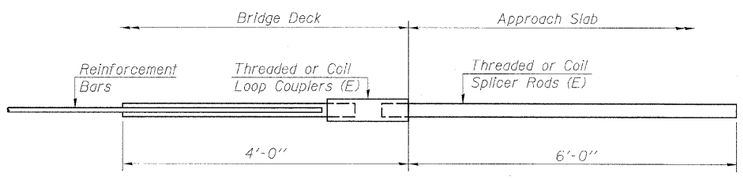

FOR INTEGRAL OR SEMI-INTEGRAL ABUTMENTS

Bar Splicer for #5 bar
Min. Capacity = 23.0 kips - tension
Min. Pull-out Strength = 12.3 kips - tension
No. Required =

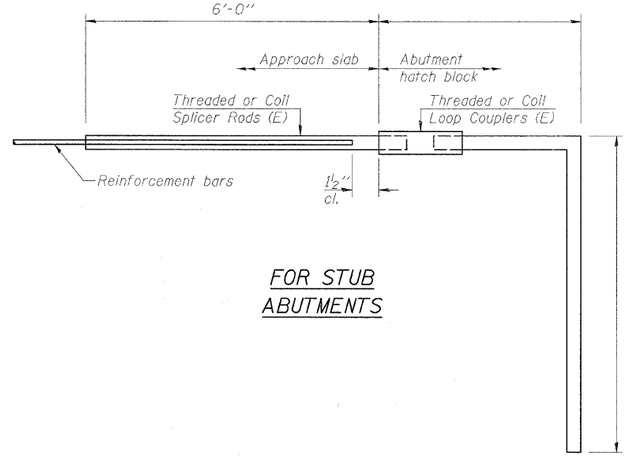

FOR STUB ABUTMENTS

Bar Splicer for #5 bar
Min. Capacity = 23.0 kips - tension
Min. Pull-out Strength = 12.3 kips - tension
No. Required =

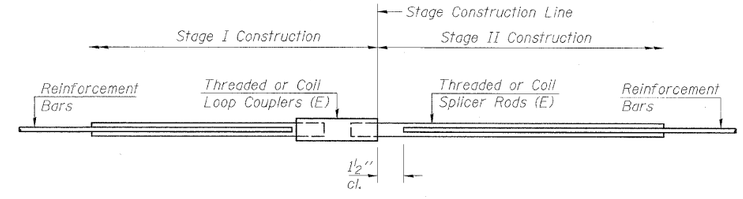

STANDARD

Bar Size	No. Assemblies Required	Location
#4	50	Appr. Slab
#5	122	Deck
#5	172	Appr. Slab
#5	18	Pier
#7	24	Abutments
#7	10	Pier

BAR SPLICER ASSEMBLY DETAILS
STRUCTURE NO. 101-0191

DESIGNED	MMH
CHECKED	RAD
DRAWN	R.VEJAR
CHECKED	RAD

BSD-1 10-1-08

HOH ENGINEERS, INC.
55 E. Jackson Blvd.
Chicago, Illinois 60604
312.346.8131
PROJECT # 2945

SHEET NO. 18	F.A.S. RTE.	SECTION	COUNTY	TOTAL SHEETS	SHEET NO.
21 SHEETS	55	(W-1-15d)BR-1	WINNEBAGO	59	38
			CONTRACT NO. 64D22		
	FED. ROAD DIST. NO.	ILLINOIS	FED. AID PROJECT		

STATE OF ILLINOIS
DEPARTMENT OF TRANSPORTATION

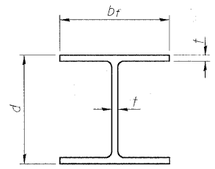

STEEL PILE TABLE

Designation	Depth d	Flange width b_f	Web and Flange thickness t	Encasement diameter A
HP 14x117	14 1/4"	14 7/8"	13/16"	30"
x102	14"	14 3/4"	11/16"	30"
x89	13 7/8"	14 3/4"	5/8"	30"
x73	13 5/8"	14 5/8"	1/2"	30"
HP 12x84	12 1/4"	12 1/4"	11/16"	24"
x74	12 1/8"	12 1/4"	5/8"	24"
x63	12"	12 1/8"	1/2"	24"
x53	11 3/4"	12"	7/16"	24"
HP 10x57	10"	10 1/4"	9/16"	24"
x42	9 3/4"	10 1/8"	7/16"	24"
HP 8x36	8"	8 1/8"	7/16"	18"

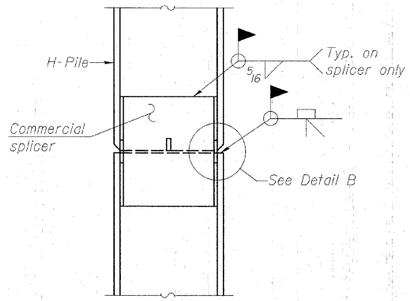

ELEVATION

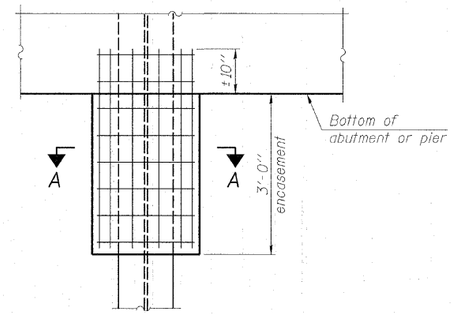

ELEVATION

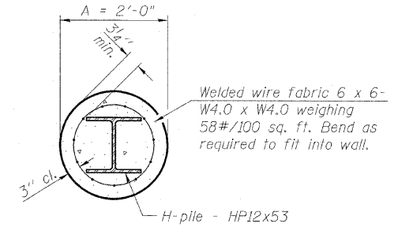

Note:
Forms for encasement may be omitted when soil conditions permit.
The cost of Excavation and Reinforcement is included with Concrete Encasement.

SECTION A-A

PILE ENCASEMENT

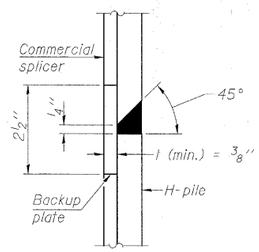

DETAIL "B"

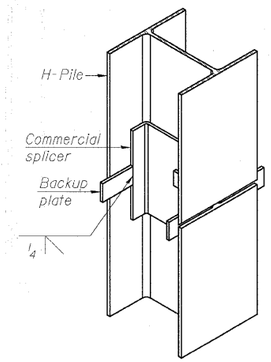

ISOMETRIC VIEW

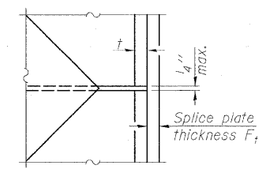

DETAIL D

WELDED COMMERCIAL SPLICE

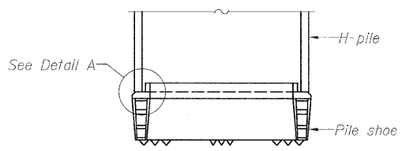

ELEVATION

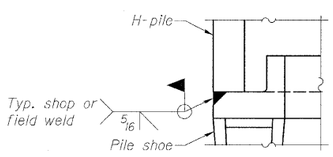

DETAIL A

H-PILE SHOE ATTACHMENT

Designation	F	F_t	F_w	W	W_t	W_w
HP 14x117	12 1/2"	1"	7/8"	7 3/4"	5/8"	1/2"
x102	12 1/2"	7/8"	3/4"	7 3/4"	5/8"	1/2"
x89	12 1/2"	3/4"	11/16"	7 3/4"	5/8"	1/2"
x73	12 1/2"	5/8"	9/16"	7 3/4"	5/8"	1/2"
HP 12x84	10"	7/8"	11/16"	6 1/2"	5/8"	1/2"
x74	10"	7/8"	11/16"	6 1/2"	5/8"	1/2"
x63	10"	5/8"	1/2"	6 1/2"	1/2"	3/8"
x53	10"	5/8"	1/2"	6 1/2"	1/2"	3/8"
HP 10x57	8"	3/4"	9/16"	5 1/4"	1/2"	3/8"
x42	8"	5/8"	9/16"	5 1/4"	1/2"	3/8"
HP 8x36	7"	5/8"	7/16"	4 1/4"	1/2"	3/8"

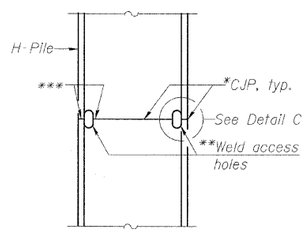

ELEVATION

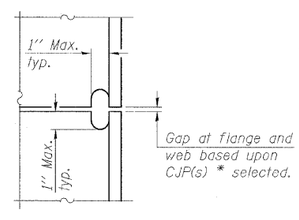

DETAIL C

COMPLETE PENETRATION WELD SPLICE

*Use joint conforming to Figure 3.4 in AWS D1.1, Structure Welding Code - Steel.

**Preparation per Fig. 5.2 in AWS D1.1, Structure Welding Code - Steel.

***Interrupt welds 1/4" from end of each pile.

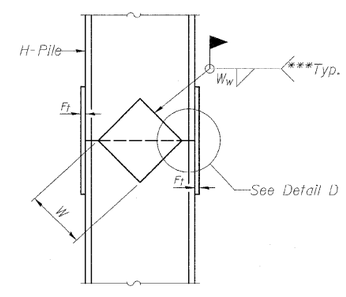

ELEVATION

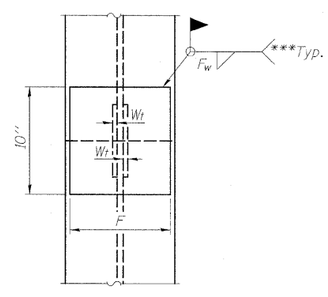

END VIEW

WELDED PLATE FIELD SPLICE

Note:
The steel H-piles shall be according to AASHTO M270 Grade 50.

DESIGNED	MMH
CHECKED	RAD
DRAWN	R.VEJAR
CHECKED	RAD

F-HP 10-01-08

HOH ENGINEERS, INC.
55 E. Jackson Blvd.
Chicago, Illinois 60604
312.346.8131
PROJECT # 2945

HP PILE DETAILS
STRUCTURE NO. 101-0191

SHEET NO. 19	F.A.S. RTE.	SECTION	COUNTY	TOTAL SHEETS	SHEET NO.
21 SHEETS	55	(W-1-15d)BR-1	WINNEBAGO	59	39
			CONTRACT NO. 64D22		
	FED. ROAD DIST. NO.	ILLINOIS	FED. AID PROJECT		

STATE OF ILLINOIS
DEPARTMENT OF TRANSPORTATION

Illinois Department of Transportation
Division of Highways
Illinois Department of Transportation/D-2

SOIL BORING LOG

Date 9/25/06

ROUTE IL 70 DESCRIPTION P92-062-07 Bridge over Otter Creek, .8 m. N. of IL 75 LOGGED BY W. Garza

SECTION (W-1-15D)BR LOCATION Durand Twp. - 15NE, SEC. , TWP. 28N, RNG. 10E

COUNTY Winnebago DRILLING METHOD Hollow Stem Auger HAMMER TYPE B-53 Diedrich Automatic

STRUCT. NO. 101-0086
Station 62+66

BORING NO. B-1a
Station 62+14
Offset 1.00ft Rt CL
Ground Surface Elev. 766.20 ft

Surface Water Elev. ft
Stream Bed Elev. 756.70 ft

Groundwater Elev.:
First Encounter 755.2 ft ▼
Upon Completion Wash ft
After Hrs. ft

Description	Elev.	DEPTH (ft)	BLOWS (/6")	UCS Qu (tsf)	MOIST (%)
11" Asphalt					
STIFF dark brown SILTY CLAY LOAM			1 3 4	1.0 P	18.0
	763.70				
STIFF dark brown SILTY CLAY			3 4 5	1.5 P	36.0
	762.20				
		-5			
MEDIUM dark brown SILTY CLAY			1 3 4	0.8 P	40.0
	759.70				
SOFT black SILTY CLAY LOAM with ORGANICS			1 1 3	0.3 B	35.0
	756.70				
		-10			
MEDIUM gray fine SAND			1 5 6		
	754.20				
MEDIUM gray SILTY LOAM			1 3 5	0.8 B	25.0
	752.20				
		-15			
MEDIUM gray SANDY LOAM			3 7 9	0.9 S	11.0
	749.70				
MEDIUM gray clean medium coarse SAND with CLAY LOAM TILL lens			4 6 4	2.3 P	21.0
	747.20				
		-20			
STIFF gray CLAY LOAM TILL with dirty SAND lens			7 14 11	1.9 B	22.0
	744.70				
MEDIUM gray dirty SAND			3 5 5		11.0
	741.70				
		-25			
MEDIUM gray dirty SAND & GRAVEL, very moist			5 8 7		
	739.20				
MEDIUM gray SILTY LOAM TILL			8 6 7	0.9 B	13.0
	737.20				
		-30			
VERY STIFF gray SILTY LOAM			7 11 9	3.3 S	15.0
	734.70				
VERY STIFF gray SILTY LOAM TILL			6 12 14	2.9 S	15.0
	732.20				
		-35			
VERY STIFF gray LOAM TILL			3 6 8	3.3 P	11.0
	729.70				
MEDIUM gray LOAM TILL			3 3 4	0.5 B	11.0
	727.20				
		-40			

The Unconfined Compressive Strength (UCS) Failure Mode is indicated by (B-Bulge, S-Shear, P-Penetrometer)
The SPT (N value) is the sum of the last two blow values in each sampling zone (AASHTO T206)
BBS, from 137 (Rev. 8-99)

Illinois Department of Transportation
Division of Highways
Illinois Department of Transportation/D-2

SOIL BORING LOG

Date 9/25/06

ROUTE IL 70 DESCRIPTION P92-062-07 Bridge over Otter Creek, .8 m. N. of IL 75 LOGGED BY W. Garza

SECTION (W-1-15D)BR LOCATION Durand Twp. - 15NE, SEC. , TWP. 28N, RNG. 10E

COUNTY Winnebago DRILLING METHOD Hollow Stem Auger HAMMER TYPE B-53 Diedrich Automatic

STRUCT. NO. 101-0086
Station 62+66

BORING NO. B-1a
Station 62+14
Offset 1.00ft Rt CL
Ground Surface Elev. 766.20 ft

Surface Water Elev. ft
Stream Bed Elev. 756.70 ft

Groundwater Elev.:
First Encounter 755.2 ft ▼
Upon Completion Wash ft
After Hrs. ft

Description	Elev.	DEPTH (ft)	BLOWS (/6")	UCS Qu (tsf)	MOIST (%)
MEDIUM gray LOAM TILL			1 4 5	0.5 B	14.0
	724.70				
SOFT gray LOAM TILL			0 3 4	0.3 B	12.0
	722.20				
		-45			
STIFF gray LOAM TILL			0 7 9	1.1 B	10.0
	719.20				
MEDIUM gray dirty SAND & GRAVEL			5 9 12		
	716.70				
		-50			
STIFF gray LOAM TILL			3 6 8	1.1 P	10.0
	714.70				
HARD gray SILTY CLAY TILL			8 10 14	4.7 B	11.0
	712.20				
		-55			
STIFF gray LOAM TILL			4 8 10	1.5 P	10.0
	709.70				
STIFF gray LOAM TILL			2 5 6	1.5 B	10.0
	706.70				
		-60			
MEDIUM gray dirty SAND			2 6 8		
	704.20				
VERY STIFF gray LOAM TILL			2 8 14	3.1 B	10.0
	702.20				
		-65			
VERY DENSE gray SILTY CLAY TILL			6 20 36		19.0
	699.70				
VERY DENSE gray SILTY CLAY TILL			6 24 25		19.0
	697.20				
		-70			
VERY STIFF gray SILTY CLAY			7 9 12	3.1 B	23.0
	694.70				
VERY STIFF gray SILTY CLAY			6 10 14	3.3 S	23.0
	692.20				
		-75			
HARD gray SILTY CLAY			7 10 14	4.5 B	22.0
	689.70				
VERY STIFF gray SILTY CLAY			7 11 12	3.3 B	21.0
	687.20				
		-80			

The Unconfined Compressive Strength (UCS) Failure Mode is indicated by (B-Bulge, S-Shear, P-Penetrometer)
The SPT (N value) is the sum of the last two blow values in each sampling zone (AASHTO T206)
BBS, from 137 (Rev. 8-99)

Illinois Department of Transportation
Division of Highways
Illinois Department of Transportation/D-2

SOIL BORING LOG

Date 9/25/06

ROUTE IL 70 DESCRIPTION P92-062-07 Bridge over Otter Creek, .8 m. N. of IL 75 LOGGED BY W. Garza

SECTION (W-1-15D)BR LOCATION Durand Twp. - 15NE, SEC. , TWP. 28N, RNG. 10E

COUNTY Winnebago DRILLING METHOD Hollow Stem Auger HAMMER TYPE B-53 Diedrich Automatic

STRUCT. NO. 101-0086
Station 62+66

BORING NO. B-1a
Station 62+14
Offset 1.00ft Rt CL
Ground Surface Elev. 766.20 ft

Surface Water Elev. ft
Stream Bed Elev. 756.70 ft

Groundwater Elev.:
First Encounter 755.2 ft ▼
Upon Completion Wash ft
After Hrs. ft

Description	Elev.	DEPTH (ft)	BLOWS (/6")	UCS Qu (tsf)	MOIST (%)
VERY STIFF gray SILTY CLAY			6 7 11	3.5 B	22.0
	684.70				
Wash			7		
HARD gray CLAY LOAM			15 20	5.0 B	22.0
	682.20				
End of Boring					
		-85			
		-90			
		-95			
		-100			

The Unconfined Compressive Strength (UCS) Failure Mode is indicated by (B-Bulge, S-Shear, P-Penetrometer)
The SPT (N value) is the sum of the last two blow values in each sampling zone (AASHTO T206)
BBS, from 137 (Rev. 8-99)

DESIGNED MMH
CHECKED RAD
DRAWN R.VEJAR
CHECKED RAD

HOH ENGINEERS, INC.
55 E. Jackson Blvd.
Chicago, Illinois 60604
312.346.8131
PROJECT # 2945

SOIL BORINGS - SHEET 1
STRUCTURE NO. 101-0191

SHEET NO. 20	F.A.S. RTE.	SECTION	COUNTY	TOTAL SHEETS	SHEET NO.
21 SHEETS	55	(W-1-15d)BR-1	WINNEBAGO	59	40
			CONTRACT NO. 64D22		
	FED. ROAD DIST. NO.	ILLINOIS	FED. AID PROJECT		

STATE OF ILLINOIS
DEPARTMENT OF TRANSPORTATION

Illinois Department of Transportation
Division of Highways
Illinois Department of Transportation/D-2

SOIL BORING LOG

Date 9/27/06

ROUTE IL 70 DESCRIPTION P92-062-07 Bridge over Otter Creek, .8 m. N. of IL 75 LOGGED BY W. Garza

SECTION (W-1-15D)BR LOCATION Durand Twp. - 15NE, SEC. , TWP. 28N, RNG. 10E

COUNTY Winnebago DRILLING METHOD Hollow Stem Auger HAMMER TYPE B-53 Diedrich Automatic

STRUCT. NO. 101-0086
Station 62+66

BORING NO. B-2a
Station 63+14
Offset 8.00ft Lt CL
Ground Surface Elev. 766.10 ft

Surface Water Elev. ft
Stream Bed Elev. 756.70 ft

Groundwater Elev.:
First Encounter 753.6 ft ▼
Upon Completion 727.6 ft ▽
After ___ Hrs. ___ ft

Description	Elev.	DEPTH (ft)	BLOWS (/6")	UCS Qu (tsf)	MOIST (%)
7.5" Asphalt, 8" Concrete					
MEDIUM brown SILTY CLAY LOAM				0.6 P	17.0
	763.60				
MEDIUM brown SILTY CLAY			2		
			4	0.6 P	21.0
	762.10		4		
		-5			
MEDIUM dark brown SILTY CLAY LOAM			1		
			1	0.5 B	34.0
	759.60		2		
SOFT dark gray SANDY LOAM			1		
			0	0.3 P	34.0
	757.10		1		
		-10			
MEDIUM gray SILTY CLAY with dirty SAND lens			1		
			5	0.8 P	26.0
			4		
	754.10				
MEDIUM gray dirty SAND & GRAVEL		▼	7		
			10		
			9		
	751.60				
		-15			
MEDIUM gray LOAM TILL			5		
			3	0.5 B	
	749.60		3		
MEDIUM gray SILTY CLAY LOAM TILL			1		
			2	0.9 B	12.0
	747.10		3		
		-20			
STIFF gray SILTY CLAY LOAM TILL			1		
			2	1.6 B	12.0
			5		
	744.10				
MEDIUM gray fine SAND			4		
			11		
			13		
	741.60				
		-25			
HARD gray SILTY CLAY with fine SAND lens			9		
			12	4.0 S	18.0
	739.60		17		
STIFF gray SILTY LOAM			15		
			9	1.1 P	18.0
			9		
	736.60				
		-30			
LOOSE/MEDIUM gray fine SAND, very moist			0		
			4		
	734.60		6		
MEDIUM gray fine SAND			3		
			9		
	732.10		10		
		-35			
MEDIUM gray fine SAND			0		
			7		
	729.60		13		
DENSE gray SAND & GRAVEL			9		
		▽	12		
			50		
	726.60				
		-40			

The Unconfined Compressive Strength (UCS) Failure Mode is indicated by (B-Bulge, S-Shear, P-Penetrometer)
The SPT (N value) is the sum of the last two blow values in each sampling zone (AASHTO T206)
BBS, from 137 (Rev. 8-99)

Illinois Department of Transportation
Division of Highways
Illinois Department of Transportation/D-2

SOIL BORING LOG

Date 9/27/06

ROUTE IL 70 DESCRIPTION P92-062-07 Bridge over Otter Creek, .8 m. N. of IL 75 LOGGED BY W. Garza

SECTION (W-1-15D)BR LOCATION Durand Twp. - 15NE, SEC. , TWP. 28N, RNG. 10E

COUNTY Winnebago DRILLING METHOD Hollow Stem Auger HAMMER TYPE B-53 Diedrich Automatic

STRUCT. NO. 101-0086
Station 62+66

BORING NO. B-2a
Station 63+14
Offset 8.00ft Lt CL
Ground Surface Elev. 766.10 ft

Surface Water Elev. ft
Stream Bed Elev. 756.70 ft

Groundwater Elev.:
First Encounter 753.6 ft ▼
Upon Completion 727.6 ft ▽
After ___ Hrs. ___ ft

Description	Elev.	DEPTH (ft)	BLOWS (/6")	UCS Qu (tsf)	MOIST (%)
MEDIUM gray LOAM TILL			2		
			5	0.6 B	10.0
	724.60		8		
VERY DENSE gray SILTY LOAM TILL			32		
			35		18.0
			38		
	721.60				
		-45			
VERY DENSE gray SILTY LOAM TILL			100/10.5"		
	719.60				
STIFF gray SILTY LOAM with fine SAND lens			9		
			20	1.8 S	17.0
	717.10		21		
		-50			
HARD gray CLAY LOAM			11		
			15	5.0 B	21.0
	714.60		22		
HARD gray CLAY LOAM with SILT lens			8		
			11	4.7 S	20.0
	712.10		17		
End of Boring					
		-55			
		-60			

The Unconfined Compressive Strength (UCS) Failure Mode is indicated by (B-Bulge, S-Shear, P-Penetrometer)
The SPT (N value) is the sum of the last two blow values in each sampling zone (AASHTO T206)
BBS, from 137 (Rev. 8-99)

DESIGNED	MMH
CHECKED	RAD
DRAWN	R.VEJAR
CHECKED	RAD

HOH ENGINEERS, INC.
55 E. Jackson Blvd.
Chicago, Illinois 60604
312.345.8131
PROJECT # 2945

SOIL BORINGS - SHEET 2
STRUCTURE NO. 101-0191

SHEET NO. 21	F.A.S. RTE.	SECTION	COUNTY	TOTAL SHEETS	SHEET NO.
21 SHEETS	55	(W-1-15d)BR-1	WINNEBAGO	59	41
			CONTRACT NO. 64D22		
	FED. ROAD DIST. NO.	ILLINOIS	FED. AID PROJECT		

DELINEATOR AND POST ORIENTATION

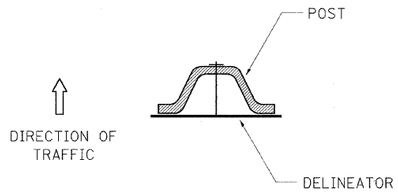

SECTION D-D

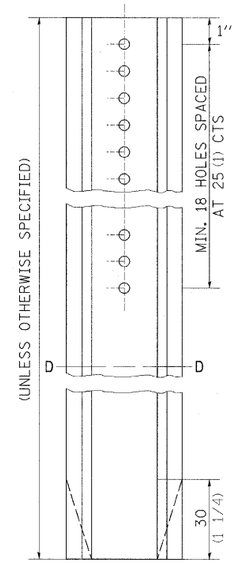

DELINEATORS SHALL BE INSTALLED ACCORDING TO STANDARD 635001 EXCEPT THAT THE POST SHALL BE ROTATED 180°. THE POST WILL HAVE THE WIDE SIDE FACING TRAFFIC AND THE DELINEATOR ATTACHECD AS SHOWN ABOVE.

ALL DIMENSIONS ARE IN MILLIMETERS (INCHES) UNLESS OTHERWISE NOTED.

REVISED - 11-01-07

DELINEATOR AND POST ORIENTATION **37.4**

TYPICAL BENCHING ON EXISTING EMBANKMENT

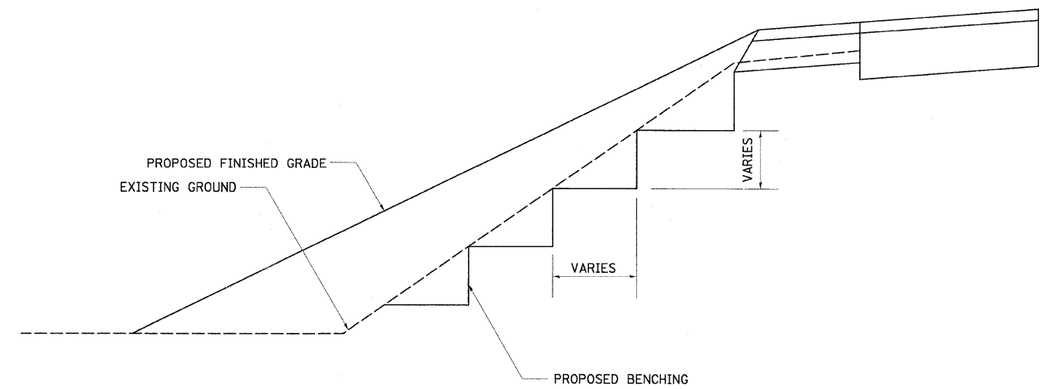

REVISED - 2-22-06

TYPICAL BENCHING ON EXISTING EMBANKMENT **50.4**

INLET SPECIAL NO. 5

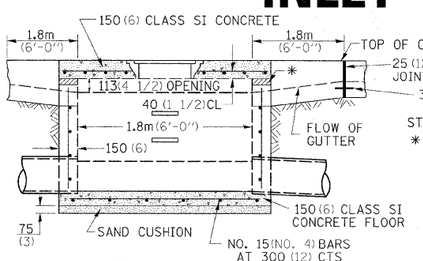

FRONT VIEW

STEPS AT 300 (12) TO 400 (16) CTS.

* THE WALL ADJUSTMENTS SHALL BE MADE WITH CONCRETE BUILDING BRICK OR CLASS SI CONCRETE.

THE HEIGHT OF THE BOX MAY BE CONSTRUCTED 150 (6) SHORT TO ALLOW FOR FIELD ADJUSTMENTS.

ALL DIMENSIONS ARE IN MILLIMETERS (INCHES) UNLESS OTHERWISE NOTED.

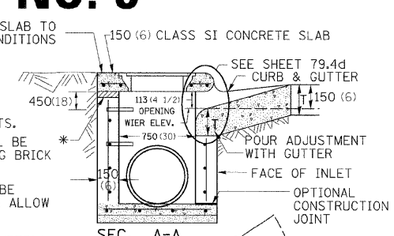

SEC. A-A

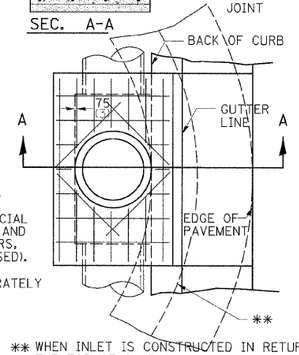

** WHEN INLET IS CONSTRUCTED IN RETURN, THE TOP OF SLAB SHALL CONFORM TO THE RADIUS OF THE RETURN.

NOTES

SEE STANDARD 602701 FOR DETAILS OF STEPS.

25 (1) PREFORMED EXPANSION JOINTS AS SHOWN SHALL BE PROVIDED ON EACH SIDE OF INLET.

CLASS SI CONCRETE OR PRECAST CONCRETE SHALL BE USED TROUGHOUT.

THE SIDE WALLS MAY BE BUILT AS PRECAST SEGMENTAL SECTIONS.

REINFORCEMENT FOR INLET SPECIAL NO. 5 SHALL BE ACCORDING TO DISTRICT STANDARD 79.4e

STEPS SHALL BE OMITTED WHEN DEPTH OF INLET IS LESS THAN 1.5 m (5 ft.)

THE INLET SHALL BE CAST IN PLACE OR PRECAST.

EXCEPT AS NOTED HEREON INLET SPECIAL NO. 5 SHALL BE CONSTRUCTED IN ACCORDANCE WITH SECTION 602 OF THE STANDARD SPECIFICATIONS.

THE CONTRACT UNIT PRICE EACH FOR INLET SPECIAL NO. 5 SHALL INCLUDE THE COST OF FURNISHING AND INSTALLING THE FRAME, LID, REINFORCEMENT BARS, FLOOR AND TOP SLABS, CAST IRON STEPS (IF USED).

THE CURB AND GUTTER WILL BE PAID FOR SEPARATELY AND WILL BE MEASURED THROUGH THE INLET.

THE CURB AND GUTTER ADJACENT TO AND 1.8m (6 FT) ON EITHER SIDE OF THE INLET SHALL BE CONSTRUCTED AS SHOWN WITH NO ADDITIONAL COMPENSATION FOR THE TRANSITION.

LIGHT WEIGHT MANHOLE CASTING

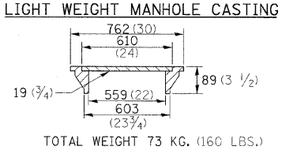

TOTAL WEIGHT 73 KG. (160 LBS.)

REVISED - 4-4-05

INLET SPECIAL NO. 5 **79.4b**

NOSE TYPE FOR INLET TOP SLAB

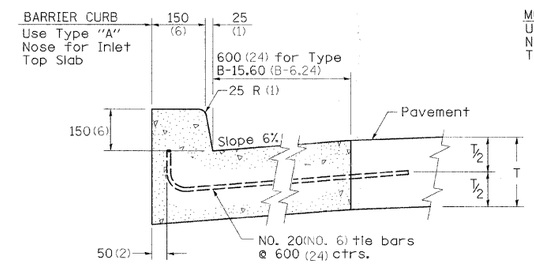

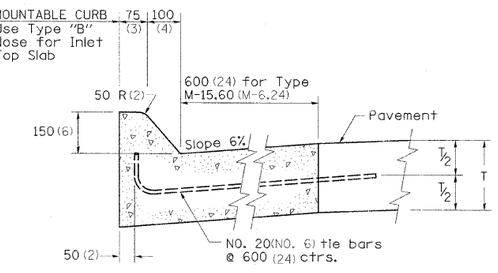

TYPE "A"

TO BE USED ON EXISTING OR PROPOSED 150 (6) BARRIER CURB

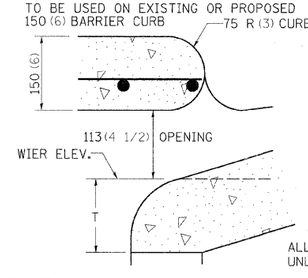

TYPE "B"

TO BE USED ON PROPOSED 150 (6) MOUNTABLE CURB

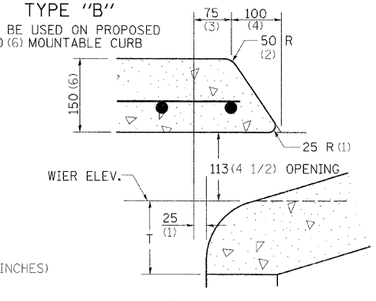

ALL DIMENSIONS ARE IN MILLIMETERS (INCHES) UNLESS OTHERWISE NOTED.

REVISED - 2-14-95

NOSE TYPE FOR INLET TOP SLAB **79.4d**

FILE NAME = H:\Projects\2944\DGNS\206207ST02.dgn	USER NAME = $USER$	DESIGNED -	REVISED -	STATE OF ILLINOIS DEPARTMENT OF TRANSPORTATION	REGION 2 / DISTRICT 2 STANDARD	F.A. RTE. 55	SECTION (W-1-15d)BR-1	COUNTY WINNEBAGO	TOTAL SHEETS 59 / SHEET NO. 42
		DRAWN -	REVISED -					CONTRACT NO. 64D22	
	PLOT SCALE = 1.000 ' / IN.	CHECKED -	REVISED -						
	PLOT DATE = 11/30/2009	DATE -	REVISED -		SCALE: SHEET NO. OF SHEETS STA. TO STA.	FED. ROAD DIST. NO.	ILLINOIS	FED. AID PROJECT	

INLET SPECIAL NO. 3, 4, 5, 6 REINFORCEMENT DETAIL

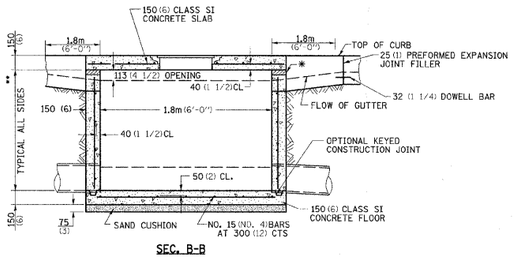

SEC. B-B

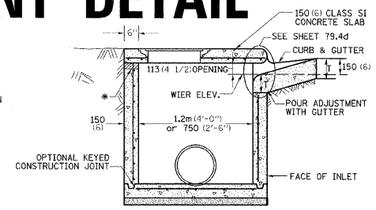

SEC. A-A

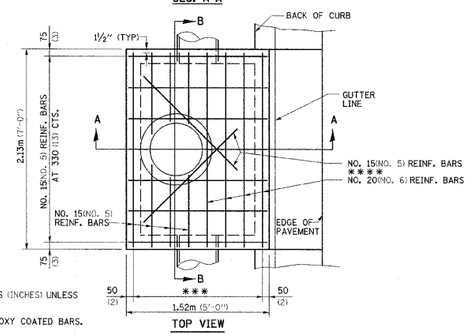

TOP VIEW

* THE WALL ADJUSTMENTS SHALL BE MADE WITH CONCRETE BUILDING BRICK OR CLASS SI CONCRETE.

THE HEIGHT OF THE BOX MAY BE CONSTRUCTED 150 (6) SHORT TO ALLOW FOR FIELD ADJUSTMENTS.

** 1.2m (4'-0") TO 2.4m (8'-0") - NO. 15 (NO. 5) REINF. BARS AT 300 (12) CTS. E.W.
2.4m (8'-0") TO 4.0m (13'-0") - NO. 15 (NO. 5) REINF. BARS AT 250 (10) CTS. E.W.
4.0m (13'-0") TO 4.6m (15'-0") - NO. 15 (NO. 5) REINF. BARS AT 200 (8) CTS. E.W.

*** 7 SPA. AT 200 mm (8") INLET SPECIAL # 3, 4
5 SPA AT 208 mm (7 5/8") INLET SPECIAL # 5, 6

**** 2 REBARS FOR INLET SPECIAL 3 & 4
4 REBARS FOR INELT SPECIAL 5 & 6

NOTES

ALL DIMENSIONS ARE IN MILLIMETERS (INCHES) UNLESS OTHERWISE NOTED.

TOP SLAB REINFORCEMENT TO BE EPOXY COATED BARS.

REVISED - 11-01-07

INLET SPECIAL NO. 3, 4, 5, 6 REINFORCEMENT DETAIL 79.4e

DRAIN FOR AGGREGATE BASES IN URBAN AREAS

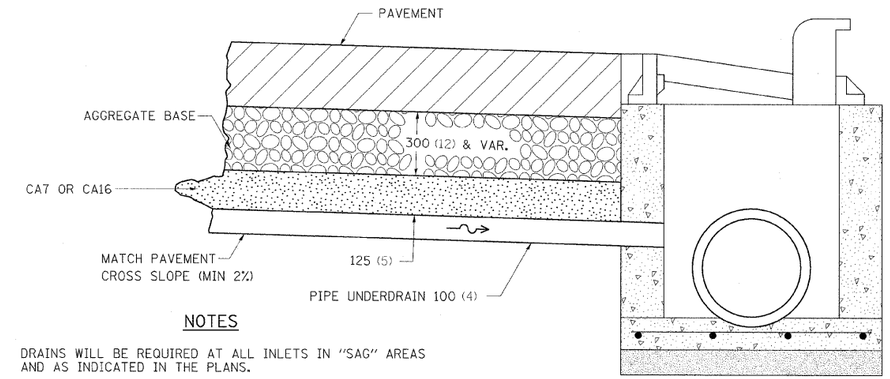

NOTES

DRAINS WILL BE REQUIRED AT ALL INLETS IN "SAG" AREAS AND AS INDICATED IN THE PLANS.

THIS WORK SHALL BE COMPLETED ACCORDING TO SECTION 601 OF THE STANDARD SPECIFICATIONS.

THIS WORK WILL BE PAID FOR AT THE CONTRACT UNIT PRICE PER METER (FOOT) FOR PIPE UNDERDRAINS OF THE DIAMETER SPECIFIED WHICH PRICE SHALL INCLUDE THE CA7 OR CA16 AND THE CONNECTION TO THE INLET.

ALL DIMENSIONS ARE IN MILLIMETERS (INCHES) UNLESS OTHERWISE NOTED.

REVISED - 4-7-99

DRAIN FOR AGGREGATE BASES IN URBAN AREAS 88.4

TREE REPLACEMENT SCHEDULE

CODE NUMBER	SCIENTIFIC NAME	COMMON NAME	SIZE	UNIT	QUANTITY
A2006514	QUERCUS BICOLOR	SWAMP WHITE OAK	1-3/4"	EACH	3

ALL DIMENSIONS ARE IN MILLIMETERS (INCHES) UNLESS OTHERWISE NOTED.

REVISED - 8-10-05

TREE REPLACEMENT SCHEDULE 90.4

STOP LINE SIGN FOR TEMPORARY SIGNALS

SIZE: 600(24) x 600(24)

100(4) CAPITAL LETTERS - BLACK

13(1/2) BORDER - BLACK

WHITE REFLECTIVE - TYPE AP
HIGH INTENSITY PRISMATIC SHEETING

GENERAL NOTE:

THIS SIGN SHALL BE INSTALLED AT THE STOP LINE AS DIRECTED BY ENGINEER.

ALL DIMENSIONS ARE IN MILLIMETERS (INCHES) UNLESS OTHERWISE NOTED.

REVISED - 1-22-07

STOP LINE SIGN FOR TEMPORARY SIGNALS 99.4

INLET SPECIAL

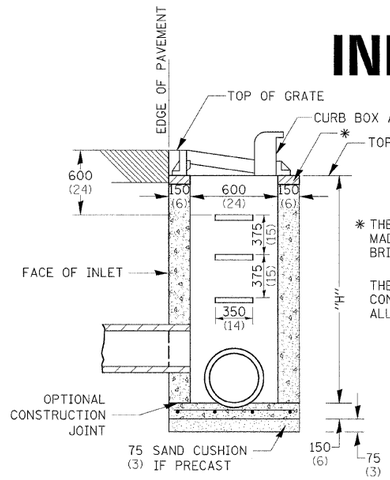

SEC. A-A

* THE WALL ADJUSTMENTS SHALL BE MADE WITH CONCRETE BUILDING BRICK OR CLASS SI CONCRETE.

THE HEIGHT OF THE BOX MAY BE CONSTRUCTED 150 (6) SHORT TO ALLOW FOR FIELD ADJUSTMENTS.

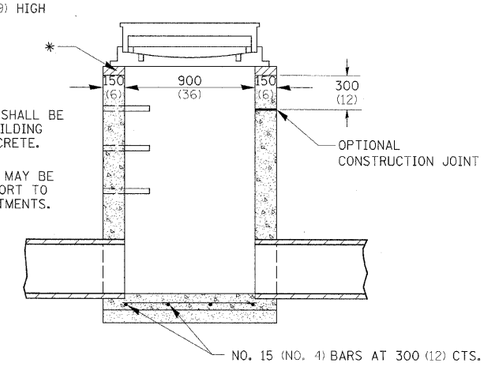

SEC. B-B

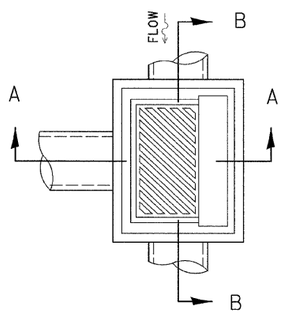

NOTES

SEE STANDARD 602701 FOR DETAILS OF STEPS.

EXCEPT AS NOTED HEREON INLET SPECIAL SHALL BE CONSTRUCTED IN ACCORDANCE WITH SECTION 602 OF THE STANDARD SPECIFICATIONS.

THE SIDE WALLS MAY BE BUILT AS PRECAST SEGMENTED SECTIONS.

ALL VOIDS AROUND PIPE ENTRANCE, BOTH INSIDE AND OUTSIDE, SHALL BE SEALED WITH MORTAR.

WEIGHT OF CAST IRON FRAME & GRATE = 240 kg (530 lbs.) ± .
STEPS SHALL BE OMITTED WHEN DEPTH OF "H" IS LESS THAN 1.5 m (5 ft).

DETAIL OF FRAME & GRATE

NOTES

CLASS SI CONCRETE OR PRECAST CONCRETE SHALL BE USED THROUGHOUT. PRECAST CONCRETE SHALL BE IN ACCORDANCE WITH SECTION 504.01 THRU 504.05 OF THE STANDARD SPECIFICATIONS EXCEPT THAT CONCRETE STRENGTH SHALL BE 27.5 MPa (4,000 psi) AFTER 28 DAYS.

THE CONTRACT UNIT PRICE EACH FOR INLET SPECIAL SHALL INCLUDE THE COST OF CONSTRUCTING THE INLET BOX, FURNISHING AND INSTALLING THE FRAME AND GRATE, THE CAST IRON STEPS (IF USED), THE PRECAST FLOOR SLABS, SAND CUSHION (WHEN USED) AND REINFORCEMENT BARS.

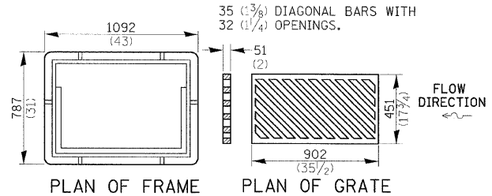

PLAN OF FRAME PLAN OF GRATE

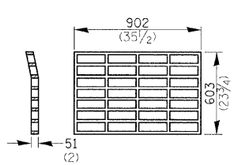

PLAN OF GRATE *

* THIS GRATE TO BE USED WITHOUT CURB BOX WHEN INLET IS IN DRIVEWAY.

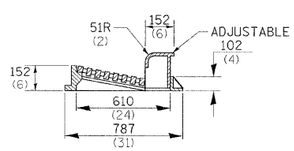

SECTION A-A

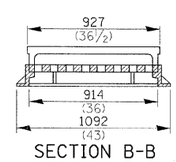

SECTION B-B

ALL DIMENSIONS ARE IN MILLIMETERS (INCHES) UNLESS OTHERWISE NOTED.

REVISED - 11-10-94

INLET SPECIAL 10.2

STANDARD INLET FOR CURB & GUTTER TYPE B-6.24

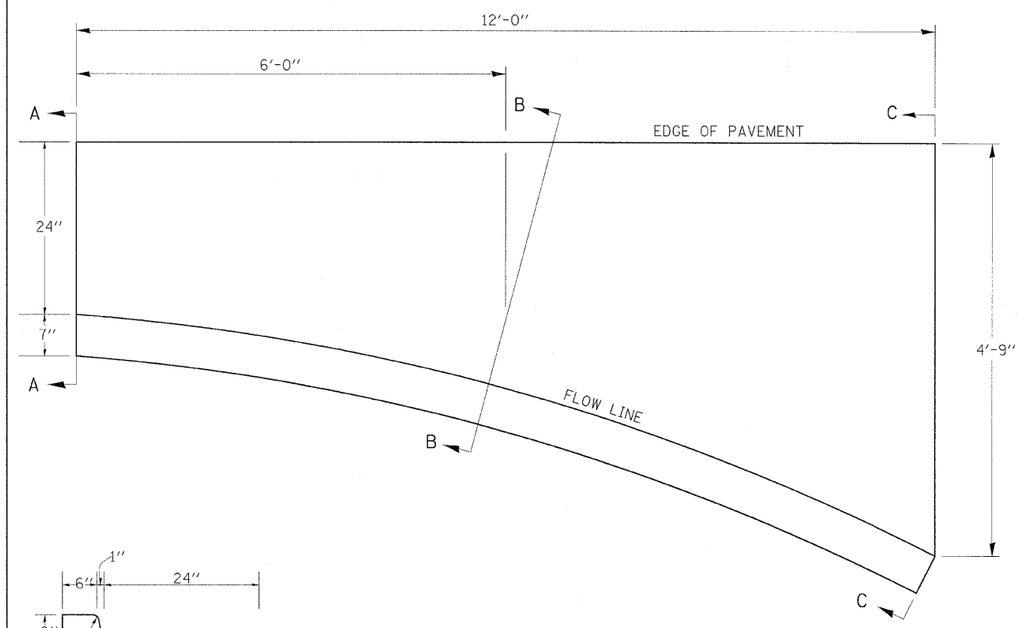

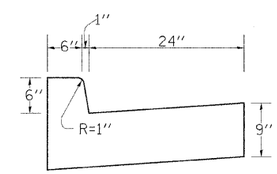

SECTION A-A

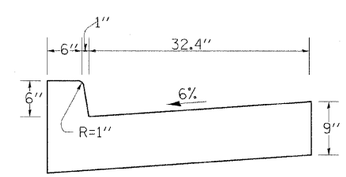

SECTION B-B

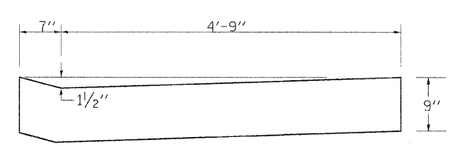

SECTION C-C

NOTES

Class SI Concrete shall be used throughout.

The Curb and Gutter inlet will be paid for at the contract unit price per cubic yard for Class SI Concrete (OUTLETS).

Joints shall be constructed in accordance with the requirementsof Article 606.07 of the Standard Specifications.

When curb and gutter is constructed adjacent to flexible pavement, a 1" expansion joint shall be installed at construction joints.

- QUANTITY -

Section A-A to C-C
(1.23 Cu. Yds.)
Class SI Concrete

REVISED - 10-10-06

STANDARD INLET FOR CURB & GUTTER TYPE B-6.24 21.2

FILE NAME = H:\Projects\2944\DGNS\Z06207STD2.dgn	USER NAME = $USER$	DESIGNED -	REVISED -	STATE OF ILLINOIS DEPARTMENT OF TRANSPORTATION	REGION 2 / DISTRICT 2 STANDARD			F.A. RTE.	SECTION	COUNTY	TOTAL SHEETS / SHEET NO.
		DRAWN -	REVISED -					55	(W-1-15d)BR-1	WINNEBAGO	59 / 44
	PLOT SCALE = 1.000 ' / IN.	CHECKED -	REVISED -							CONTRACT NO. 64D22	
	PLOT DATE = 11/30/2009	DATE -	REVISED -		SCALE:	SHEET NO. OF SHEETS	STA. TO STA.	FED. ROAD DIST. NO.	ILLINOIS	FED. AID PROJECT	

EROSION CONTROL DETAILS FOR SILT FENCE

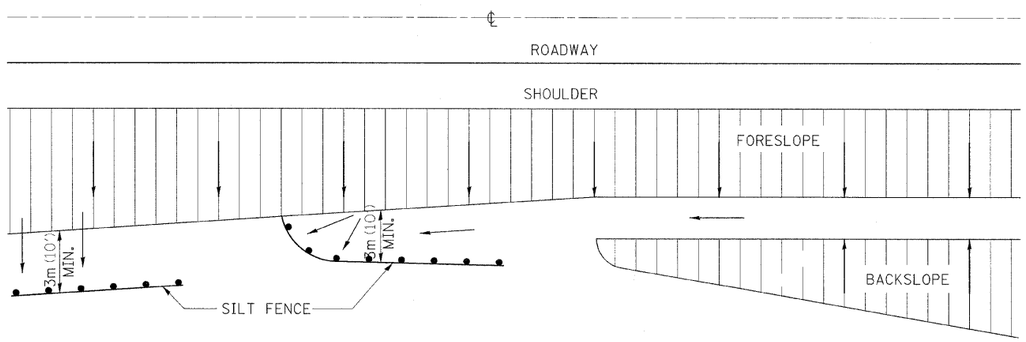

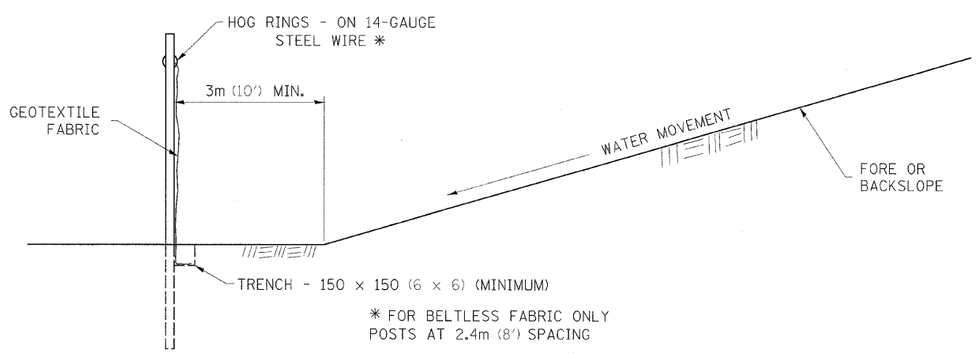

DETAILS OF SILT FENCE

ALL DIMENSIONS ARE IN MILLIMETERS (INCHES) UNLESS OTHERWISE NOTED.

REVISED 10-22-01

EROSION CONTROL DETAILS FOR SILT FENCE 29.2

INFORMATIONAL WARNING SIGN (FOR NARROW TRAVEL LANES)

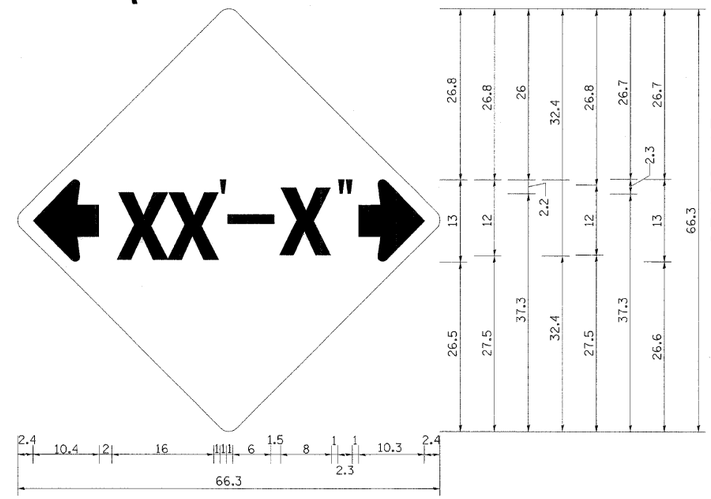

NOTES
W12-2 - Horizontal Clearance Sign 48.0" across sides, 1.9" Radius, 0.8" Border, 0.5" Indent, Black on Orange; Standard Arrow Custom 10.4" X 8.1" 180° Black 11 Inch D Series Lettering; Standard Arrow Custom 10.4" X 8.1" 0°

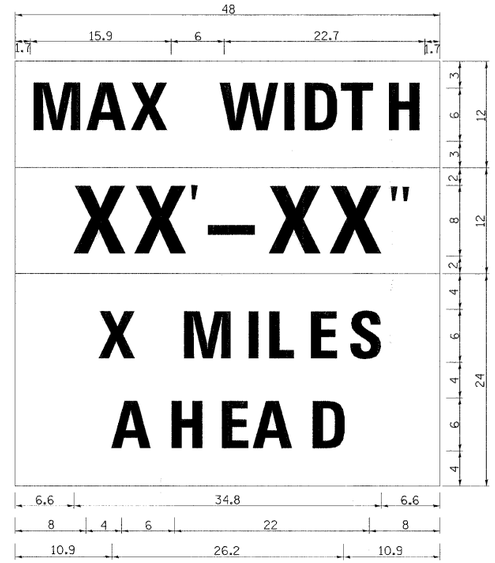

W12-I103 (Width is 8D);
No border, Black on White;
[MAX WIDTH] D;

No border, Black on Orange;
[XX'-XX"] D;

No border, Black on White;
[X MILES] D; [AHEAD] D;

All work to furnish and install these signs shall be included in the cost of the Traffic Control Standards and shall not be paid for separately.

ALL DIMENSIONS ARE IN INCHES UNLESS OTHERWISE NOTED.

REVISED - 1-9-08

INFORMATIONAL WARNING SIGNS (FOR NARROW TRAVEL LANES) 39.2

FILE NAME = H:\Projects\2944\DGNS\Z86207STD2.dgn	USER NAME = $USER$	DESIGNED -	REVISED -	STATE OF ILLINOIS DEPARTMENT OF TRANSPORTATION	REGION 2 / DISTRICT 2 STANDARD	F.A. RTE.	SECTION	COUNTY	TOTAL SHEETS / SHEET NO.
		DRAWN -	REVISED -			55	(W-1-15d)BR-1	WINNEBAGO	59 / 45
	PLOT SCALE = 1.000 ' / IN.	CHECKED -	REVISED -			CONTRACT NO.			
	PLOT DATE = 11/30/2009	DATE -	REVISED -		SCALE: SHEET NO. OF SHEETS STA. TO STA.	FED. ROAD DIST. NO.	ILLINOIS	FED. AID PROJECT	

WITNESS MARKER FOR PERMANENT SURVEY MARKERS, TYPE II

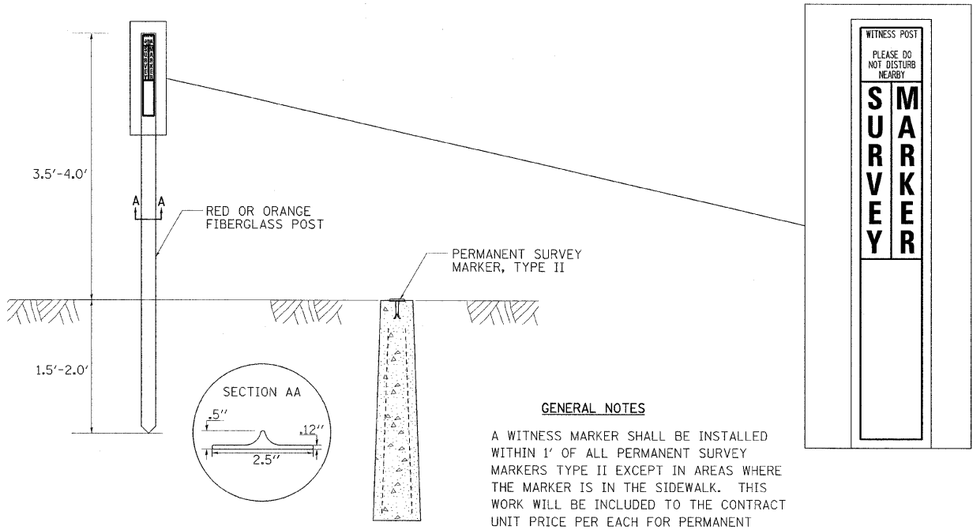

GENERAL NOTES

A WITNESS MARKER SHALL BE INSTALLED WITHIN 1' OF ALL PERMANENT SURVEY MARKERS TYPE II EXCEPT IN AREAS WHERE THE MARKER IS IN THE SIDEWALK. THIS WORK WILL BE INCLUDED TO THE CONTRACT UNIT PRICE PER EACH FOR PERMANENT SURVEY MARKERS, TYPE II.

PERMANENT SURVEY MARKERS, TYPE II

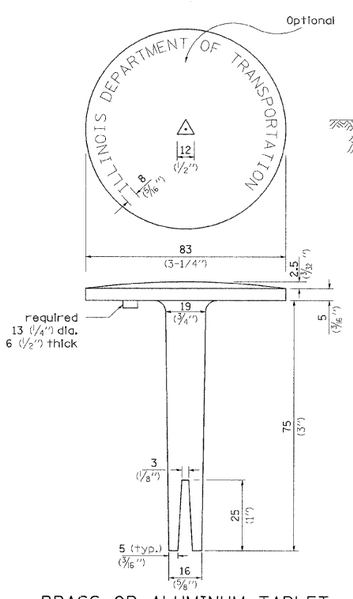

BRASS OR ALUMINUM TABLET

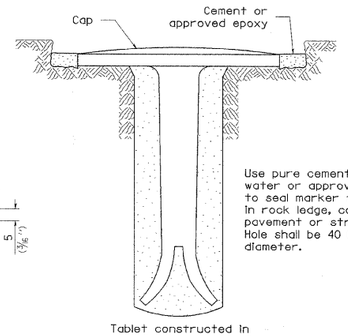

TYPE II

DETAIL A

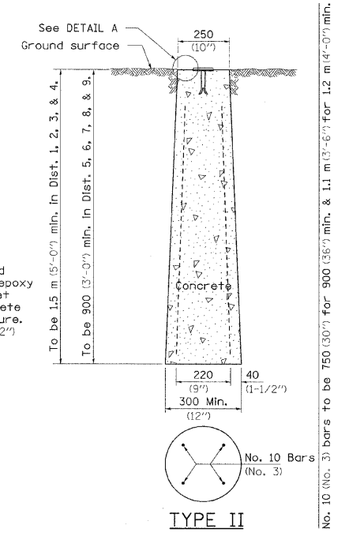

TYPE II

CAST-IN-PLACE MARKER

ALL DIMENSIONS ARE IN MILLIMETERS (INCHES) UNLESS OTHERWISE NOTED.

REVISED-10-21-08

WITNESS MARKER & PERMANENT SURVEY MARKERS, TYPE II 66.2

ENTRANCE SIGN FOR USE WITH TEMPORARY SIGNALS

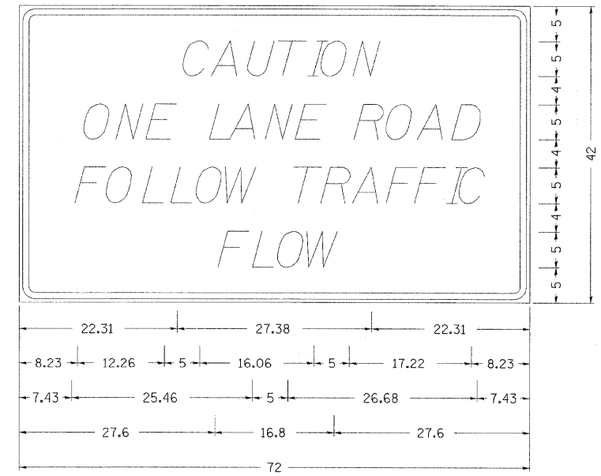

Type AA Fluorescent Orange Sheeting ;
2.25" Radius, 0.88" Border, 0.50" Indent, Black on Orange;
[CAUTION] D; [ONE LANE ROAD] D;
[FOLLOW TRAFFIC] D; [FLOW] D

Table Of Widths And Spaces

22.31	C 3.36	0.62	A 4.18	0.94	U 3.36	0.94	T 3.04	0.94	I 0.78	1.17	O 3.52	1.17	N 3.36	22.31		
8.23	O 3.51	1.17	N 3.36	1.18	E 3.04											
	5.00	L 3.05	0.31	A 4.18	0.94	N 3.36	1.17	E 3.05								
	5.00	R 3.36	0.93	O 3.52	0.94	A 4.18	0.93	D 3.36	8.23							
7.43	F 3.04	0.94	O 3.52	1.17	L 3.04	0.94	L 3.05	0.94	O 3.51	0.94	W 4.37					
	5.00	T 3.05	0.94	R 3.36	0.94	A 4.18	0.93	F 3.05	0.94	F 3.04	0.94	I 0.78	1.18	C 3.35	7.43	
27.60	F 3.05	0.94	L 3.04	0.94	O 3.52	0.93	W 4.38	27.60								

GENERAL NOTES

THIS SIGN SHALL BE INSTALLED AT ENTRANCES LOCATED BETWEEN THE TEMPORARY SIGNALS AS DIRECTED BY THE ENGINEER.

ALL DIMENSIONS ARE IN INCHES UNLESS OTHERWISE NOTED.

THE COST TO FURNISH, INSTALL AND REMOVE THIS SIGN AT THE REQUIRED LOCATIONS SHALL BE INCLUDED IN THE COST OF TRAFFIC CONTROL AND PROTECTION STANDARD 701321.

ALL DIMENSIONS ARE IN MILLIMETERS (INCHES) UNLESS OTHERWISE NOTED.

REVISED - 10-28-05

ENTRANCE SIGN FOR USE WITH TEMPORARY SIGNALS 75.2

FILE NAME = H:\Projects\2944\DGNS\Z06207STD2.dgn	USER NAME = $USER$	DESIGNED -	REVISED -
		DRAWN -	REVISED -
	PLOT SCALE = 1.000 ' / IN.	CHECKED -	REVISED -
	PLOT DATE = 11/30/2009	DATE -	REVISED -

STATE OF ILLINOIS DEPARTMENT OF TRANSPORTATION

REGION 2 / DISTRICT 2 STANDARD

SCALE: SHEET NO. OF SHEETS STA. TO STA.

F.A. RTE.	SECTION	COUNTY	TOTAL SHEETS	SHEET NO.
55	(W-1-15d)BR-1	WINNEBAGO	59	46
		CONTRACT NO.		
FED. ROAD DIST. NO.	ILLINOIS	FED. AID PROJECT		

STORM WATER POLLUTION PREVENTION PLAN
EROSION CONTROL PLAN

THE FOLLOWING PLAN WAS ESTABLISHED AND INCLUDED IN THESE PLANS TO DIRECT THE CONTRACTOR IN THE PLACEMENT OF TEMPORARY EROSION CONTROL SYSTEMS AND TO PROVIDE A STORM WATER POLLUTION PREVENTION PLAN FOR COMPLIANCE UNDER NPDES.

THE PURPOSE OF THIS PLAN IS TO MINIMIZE SILTATION WITHIN THE CONSTRUCTION ZONE AND TO ELIMINATE SEDIMENTS FROM ENTERING AND LEAVING THE CONSTRUCTION ZONE BY UTILIZING PROPER TEMPORARY EROSION CONTROL SYSTEMS AND PROVIDING GROUND COVER WITHIN A REASONABLE AMOUNT OF TIME.

CERTAIN ITEMS, AS SHOWN IN THIS PLAN AND REFERENCED BY THE LEGEND, SHALL BE PLACED BY THE CONTRACTOR AT THE BEGINNING OF CONSTRUCTION. OTHER ITEMS SHALL BE PLACED BY THE CONTRACTOR AS DIRECTED BY THE ENGINEER ON A CASE BY CASE SITUATION RESULTING FROM THE CONTRACTOR'S SEQUENCE OF ACTIVITIES, TIME OF YEAR, AND EXPECTED WEATHER CONDITIONS.

THE CONTRACTOR SHALL PLACE PERMANENT EROSION CONTROL SYSTEMS AND SEEDING WITHIN A REASONABLE AMOUNT OF TIME: THEREFORE, REDUCING THE AMOUNT OF AREA BEING OPEN TO THE POSSIBILITY OF EROSION AND REDUCING THE AMOUNT OF TEMPORARY SEEDING. THE RESIDENT ENGINEER WILL DETERMINE IF TEMPORARY EROSION CONTROL SYSTEMS SHOWN IN THE PLAN CAN BE DELETED, THE SIZE OF THE PROPOSED DITCH CHECKS, THE PROPER METHOD OF INSTALLATION, AND IF ANY ADDITIONAL TEMPORARY EROSION CONTROL SYSTEMS SHALL BE ADDED WHICH ARE NOT INCLUDED IN THE PLANS. THE CONTRACTOR SHALL PERFORM ALL WORK AS DIRECTED BY THE ENGINEER AND AS SHOWN IN STANDARD 280001 OF THE PLANS.

SITE DESCRIPTION
DESCRIPTION OF CONSTRUCTION ACTIVITY:

THIS PROJECT CONSISTS OF REMOVING AND REPLACING EXISTING BRIDGE, SLIGHTLY LOWERING PROFILE OF ROADWAY TO MATCH PROPOSED BRIDGE AND APPROACH SLABS.

DESCRIPTION OF INTENDED SEQUENCE OF ACTIVITIES:
THE SEQUENCE OF EVENTS ARE AS FOLLOW: CLEARING, EMBANKMENT, EXCAVATION, GRADING AND PAVING. THIS PROJECT WILL BE CONSTRUCTED IN SEGMENTS AS SHOWN IN THE "STAGING PLANS".

TOTAL CONSTRUCTION SITE (CONSTRUCTION LIMIT TO CONSTRUCTION LIMIT) 1.75 ACRES
PROPOSED R.O.W (TOTAL PARCEL AREA) 0.29 ACRES
DISTURBED BY EXCAVATION (E.O.P TO CONSTRUCTION LIMIT) 1.75 ACRES

SUPPORTING REPORTS AND PLANS
THE FOLLOWING ASSISTED IN DEVELOPING THE EROSION CONTROL PLAN AS REFERENCED DOCUMENTS:

SOIL PROFILE SHEETS, SOILS REPORTS, BORING LOGS
USGS DRAINAGE MAPS, PROJECT PLAN DOCUMENTS

DRAINAGE TRIBUTARIES RECEIVING WATER FROM CONSTRUCTION SITE

SOUTH BRANCH OTTER CREEK IS RECEIVING WATER

PECATONICA RIVER IS ULTIMATE RECEIVING WATER

EROSION CONTROLS AND SEDIMENT CONTROL PROCEDURES
STABILIZATION PRACTICES AT THE BEGINNING OF CONSTRUCTION:
PERIMETER EROSION CONTROL SHALL BE PLACED PRIOR TO BEGINNING EARTHWORK.

STABILIZATION PRACTICES DURING CONSTRUCTION:
AS EARTH EXCAVATION AND EMBANKMENT ARE BEING COMPLETED THE CONTRACTOR SHALL PLACE DITCH CHECKS, INLET AND PIPE PROTECTION, EROSION CONTROL BLANKET, AND SEEDING AS STAGES OF THE PROJECT ARE COMPLETED. PERIMETER EROSION BARRIER WILL BE INSTALLED AT ADDITIONAL LOCATIONS AS THE PROJECT PROGRESSES. SEEDING SHALL BE COMPLETED AS SPECIFIED IN THE EROSION CONTROL/SEEDING MOBILIZATION AND TEMPORARY SEEDING SPECIAL PROVISION.

MAINTENANCE AFTER FINAL GRADING
TEMPORARY EROSION CONTROL SYSTEMS SHALL BE LEFT IN PLACE WITH PROPER MAINTENANCE UNTIL PERMANENT EROSION CONTROL IS IN PLACE AND WORKING PROPERLY AND ALL PROPOSED TURF AREAS SEEDED AND ESTABLISHED WITH THE PROPER STAND. ONCE PERMANENT EROSION CONTROL SYSTEMS AS PROPOSED IN THE PLANS ARE FUNCTIONAL AND ESTABLISHED, TEMPORARY ITEMS SHALL BE REMOVED, CLEANED UP AND DISTURBED TURF RESEEDED.

MAILBOX TURNOUT IN CURB AND GUTTER SECTION

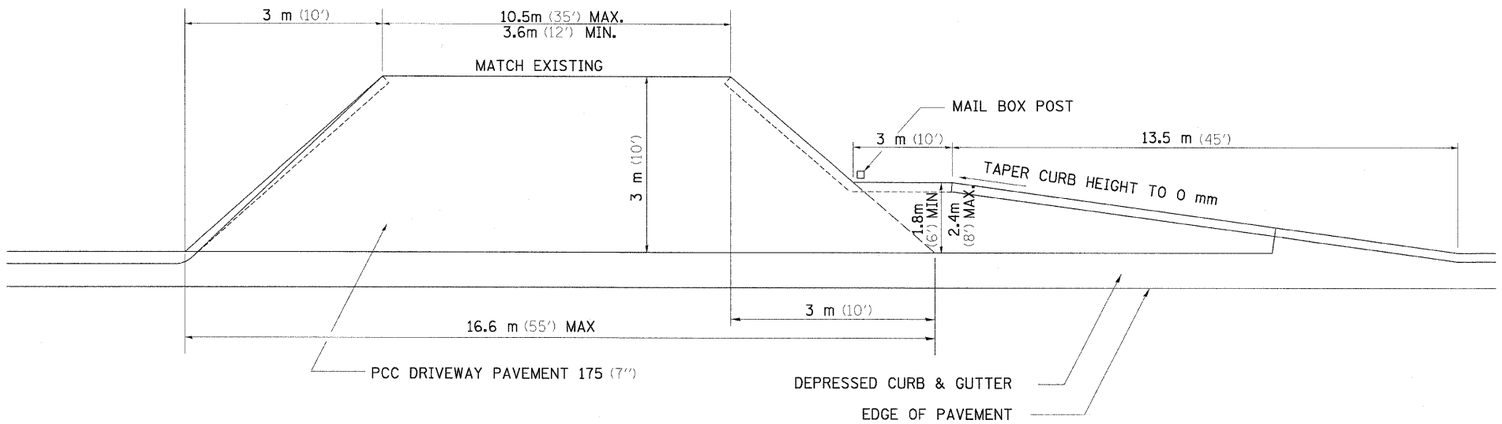

COMMERCIAL ENTRANCE WITH MAIL BOX TURNOUT

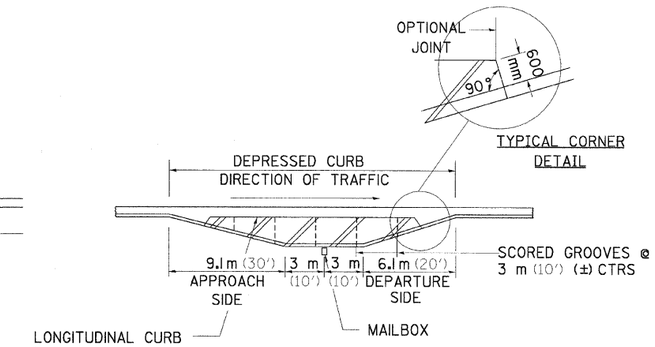

MAIL BOX TURNOUT

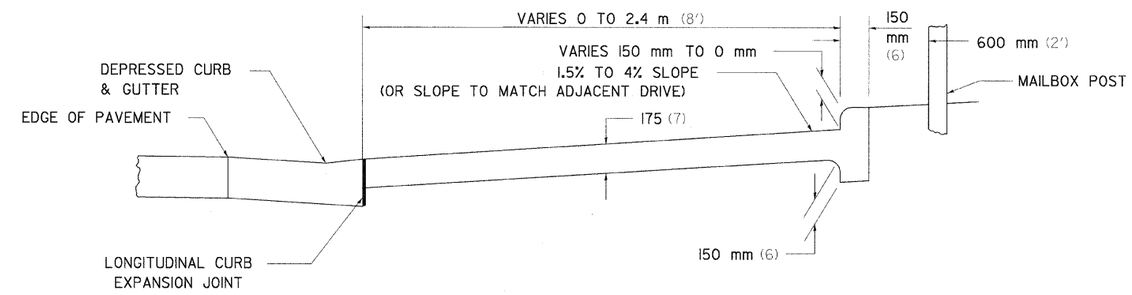

TYPICAL CROSS SECTION

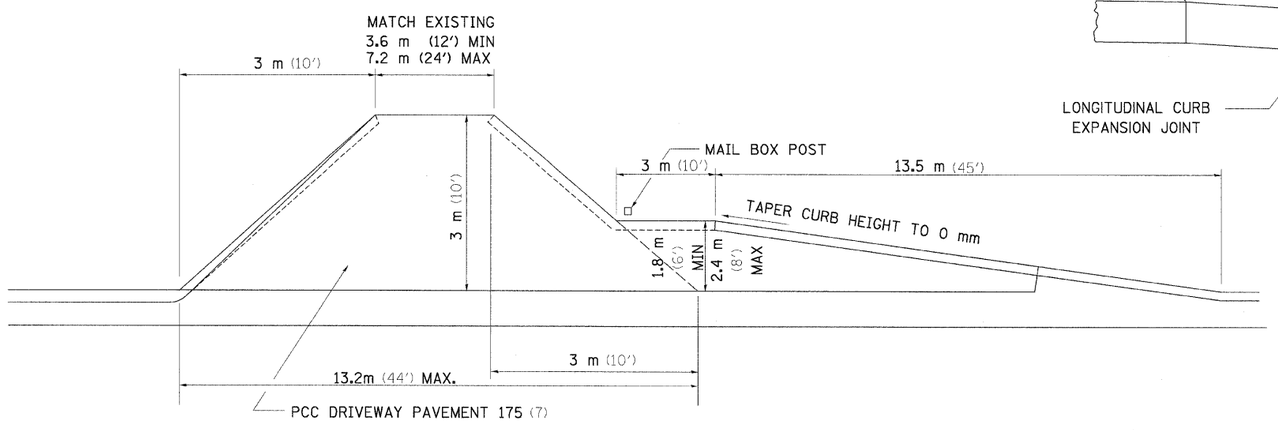

PRIVATE ENTRANCE WITH MAIL BOX TURNOUT

GENERAL NOTES

1.) THE LONGITUDINAL CURB EXPANSION JOINT SHALL CONFORM TO SECTION 1051 OF THE STANDARD SPECIFICATIONS.
2.) THE MAILBOX TURNOUT CROSS SLOPE WILL BE AS SHOWN ABOVE, AS SHOWN ON THE STATION CROSS SECTIONS OR AS DIRECTED BY THE ENGINEER.
3.) THE MAILBOX TURNOUT SHALL BE CONSTRUCTED WITH SCORED GROOVES, AS SPECIFIED IN ARTICLE 423.06 OF THE STANDARD SPECIFICATIONS, AT APPROXIMATELY 3.05 m (10') CENTERS. IN THE EVENT THERE IS EXISTING OR PROPOSED SIDEWALK PRESENT, THESE SCORED GROOVES SHALL BE PLACED IN LINE WITH EVERY OTHER JOINT IN THE ADJACENT SIDEWALK.
4.) THE WORK WILL BE PAID FOR AT THE CONTRACT UNIT PRICE PER SQUARE YARD FOR P.C. CONCRETE DRIVEWAY PAVEMENT OF THE THICKNESS SPECIFIED IN THE PLANS WHICH PRICE SHALL INCLUDE THE LONGITUDINAL CURB EXPANSION JOINT, MONOLITHIC CURB AS SHOWN, SCORED GROOVES, AND NO ADDITIONAL COMPENSATION WILL BE ALLOWED.
5) SEE THE DISTRICT STANDARD 25.1 FOR ADDTIONAL DETAILS.

ALL DIMENSIONS ARE IN MILLIMETERS (INCHES) UNLESS OTHERWISE NOTED.

MAILBOX TURNOUT IN CURB AND GUTTER SECTION **3.1**

FILE NAME =	USER NAME = $USER$	DESIGNED -	REVISED - 1-15-08	STATE OF ILLINOIS DEPARTMENT OF TRANSPORTATION	REGION 2 / DISTRICT 2 STANDARD	F.A. RTE.	SECTION	COUNTY	TOTAL SHEETS	SHEET NO.
H:\Projects\2944\DGNS\Z06207STD2.dgn		DRAWN -	REVISED -			55	(W-1-15d)BR-1	WINNEBAGO	59	48
	PLOT SCALE = 1.000 ' / IN.	CHECKED -	REVISED -					CONTRACT NO.		
	PLOT DATE = 11/30/2009	DATE -	REVISED -		SCALE: SHEET NO. OF SHEETS STA. TO STA.	FED. ROAD DIST. NO.	ILLINOIS	FED. AID PROJECT		

ENTRANCE APPROACHES – URBAN AREA

TYPICAL APPLICATION OF ENTRANCES

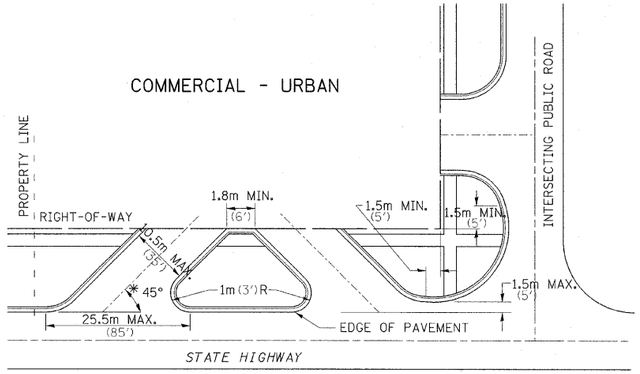

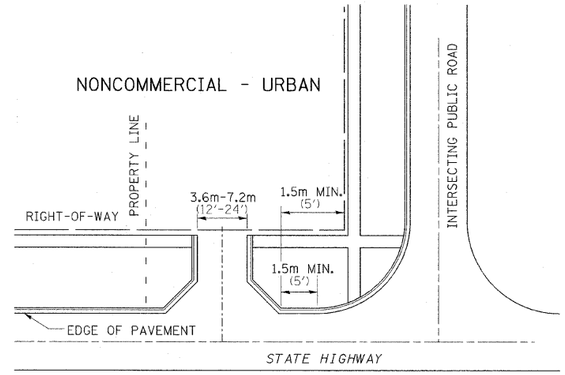

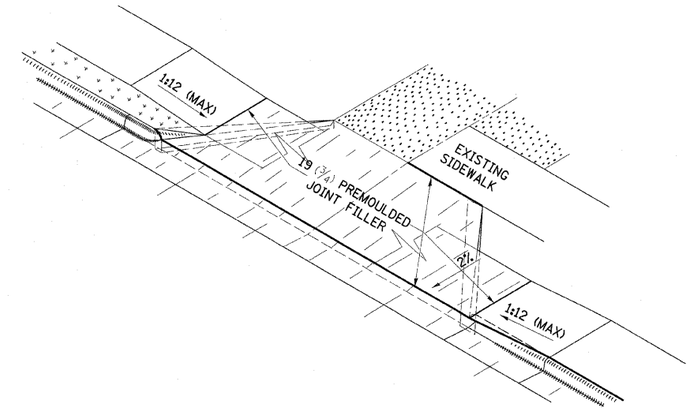

WHEN THE ISLAND BETWEEN DRIVES IS LESS THAN 7.5m (25') LONG OR LESS THAN 10 FEET WIDE, IT SHALL BE DEFINED BY CURBS, MASONRY, OR OTHER DEVICES.

* 45° MIN. ANGLE PERMITTED ONLY FOR ONE-WAY DRIVEWAYS. 60° MIN. ANGLE FOR TWO-WAY DRIVEWAYS.

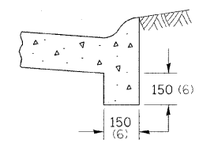

SEC B-B

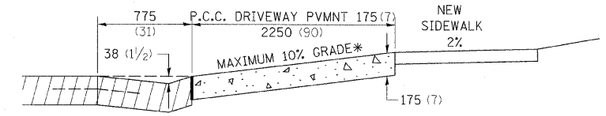

ASCENDING APPROACH

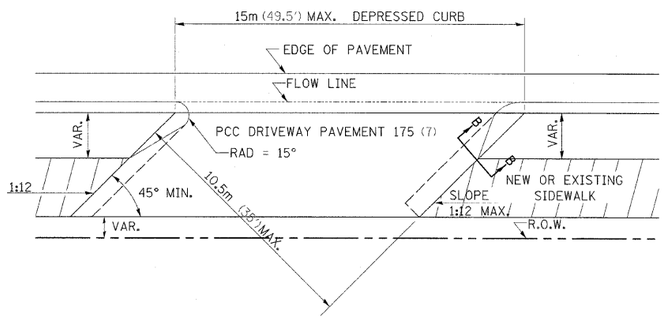

COMMERCIAL ENTRANCE

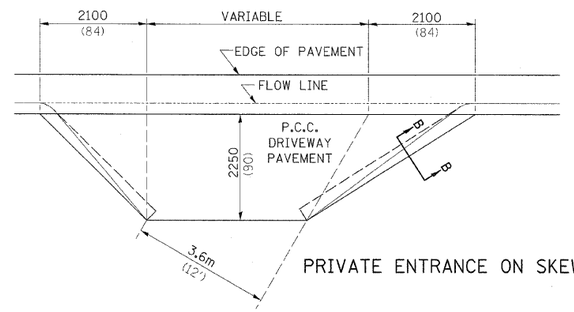

PRIVATE ENTRANCE ON SKEW

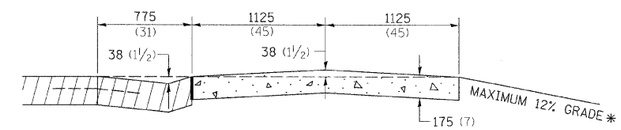

DESCENDING APPROACH

* IN CASES WHERE GRADE EXCEEDS 10%, THE RESIDENT ENGINEER SHALL CHECK WITH DISTRICT DESIGN OFFICE TO DETERMINE NEW APPROACH GRADE, PARTICULAR ATTENTION SHALL BE PAID TO THE NEGATIVE GRADE TO PREVENT DRAINAGE FROM OVER FLOWING INTO THE PRIVATE ENTRANCE.

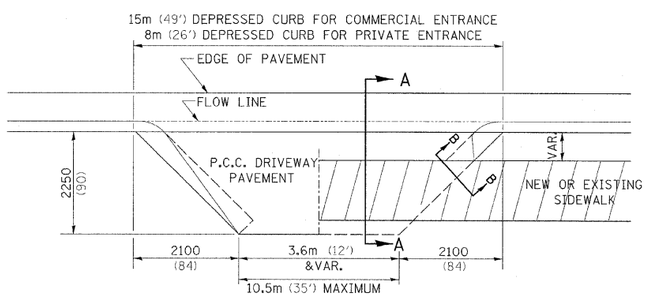

NO SIDEWALK EXISTING SIDEWALK

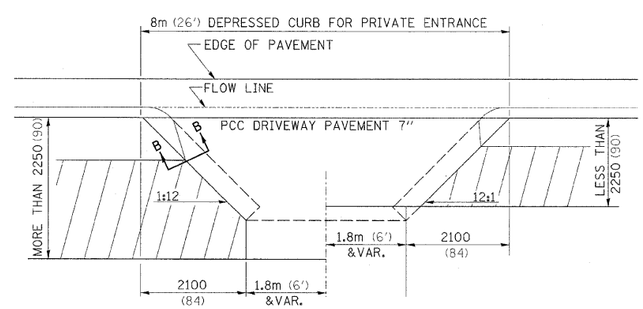

NEW SIDEWALK

SECTION A-A

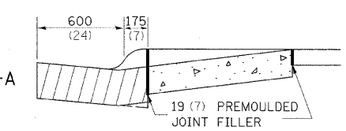

THE VARIABLE HEIGHT INTEGRAL CURB AND PREMOULDED JOINT FILLER WILL NOT BE PAID FOR SEPARATELY, BUT SHALL BE INCLUDED IN THE CONTRACT UNIT PRICE OF DRIVEWAY PAVEMENT OF THE THICKNESS SPECIFIED.

ALL DIMENSIONS ARE IN MILLIMETERS (INCHES) UNLESS OTHERWISE NOTED.

ENTRANCE APPROACHES – URBAN AREA 25.1

FILE NAME = H:\Projects\2944\DGNS\Z06207STD2.dgn	USER NAME = $USER$	DESIGNED -	REVISED - 1-11-08	STATE OF ILLINOIS DEPARTMENT OF TRANSPORTATION	REGION 2 / DISTRICT 2 STANDARD	F.A. RTE.	SECTION	COUNTY	TOTAL SHEETS	SHEET NO.
		DRAWN -	REVISED -			55	(W-1-15d)BR-1	WINNEBAGO	59	49
	PLOT SCALE = 1.000 ' / IN.	CHECKED -	REVISED -					CONTRACT NO.		
	PLOT DATE = 11/30/2009	DATE -	REVISED -		SCALE: SHEET NO. OF SHEETS STA. TO STA.	FED. ROAD DIST. NO.	ILLINOIS	FED. AID PROJECT		

TYPICAL PAVEMENT MARKINGS

TYPICAL PAVEMENT MARKING FOR FLUSH MEDIAN AT LEFT TURN LANE

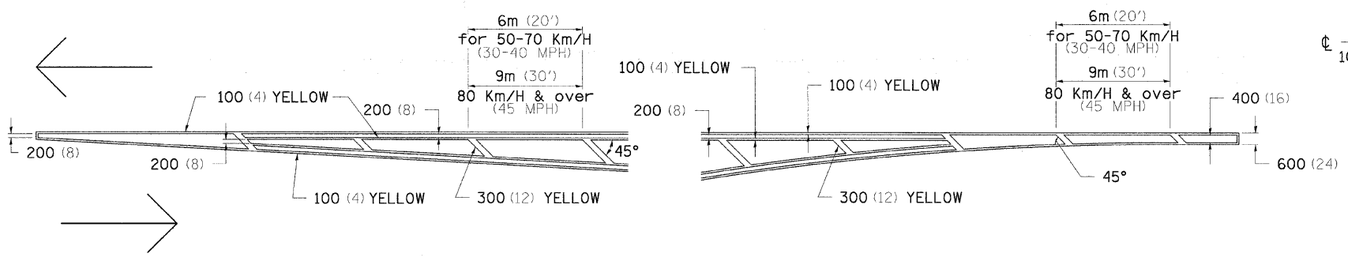

MEDIAN PAVEMENT MARKING

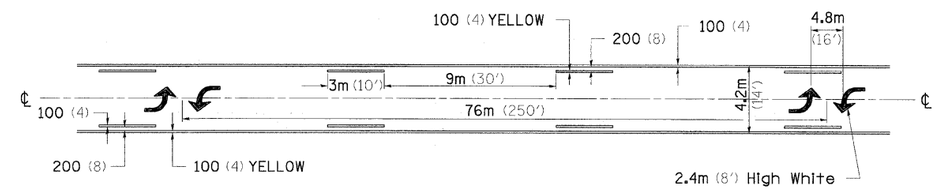

** ALL DIMENSIONS ARE IN MILLIMETERS (INCHES) UNLESS OTHERWISE NOTED.

TYPICAL ISLAND OFFSET SHOULDER WIDTH

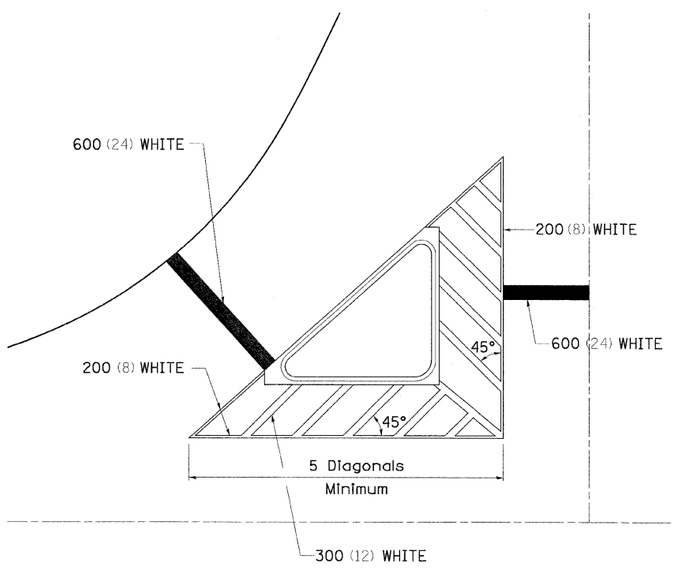

TYPICAL PARKING SPACING

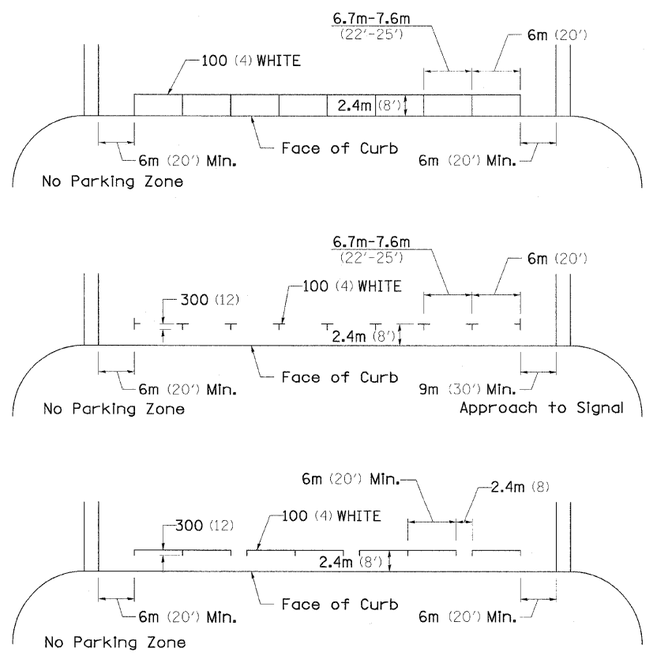

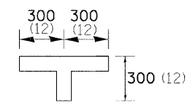

STANDARD CROSSWALK MARKING

See Schedules for Locations

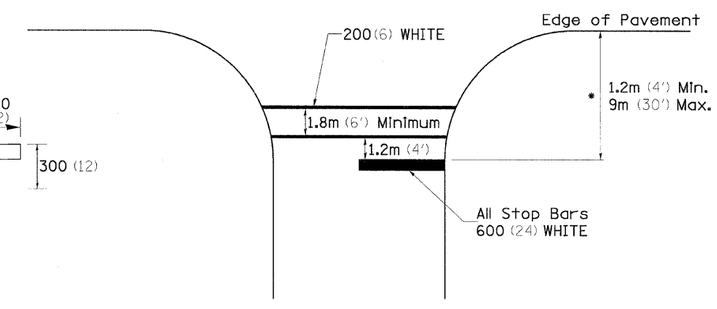

* Distance to the nearest edge of the intersecting roadway in the absence of a marked crosswalk.

TYPICAL PAVEMENT MARKINGS SHEET 1 OF 3 41.1

FILE NAME = H:\Projects\2944\DGNS\Z262075TD2.dgn	USER NAME = @USER@	DESIGNED -	REVISED - 10-21-08	STATE OF ILLINOIS DEPARTMENT OF TRANSPORTATION	REGION 2 / DISTRICT 2 STANDARD	F.A. RTE.	SECTION	COUNTY	TOTAL SHEETS / SHEET NO.
		DRAWN -	REVISED -			55	(W-1-15d)BR-1	WINNEBAGO	59 / 50
	PLOT SCALE = 1.000 ' / IN.	CHECKED -	REVISED -					CONTRACT NO.	
	PLOT DATE = 11/30/2009	DATE -	REVISED -		SCALE: SHEET NO. OF SHEETS STA. TO STA.	FED. ROAD DIST. NO.	ILLINOIS	FED. AID PROJECT	

TYPICAL PAVEMENT MARKINGS

ARROW LAYOUT

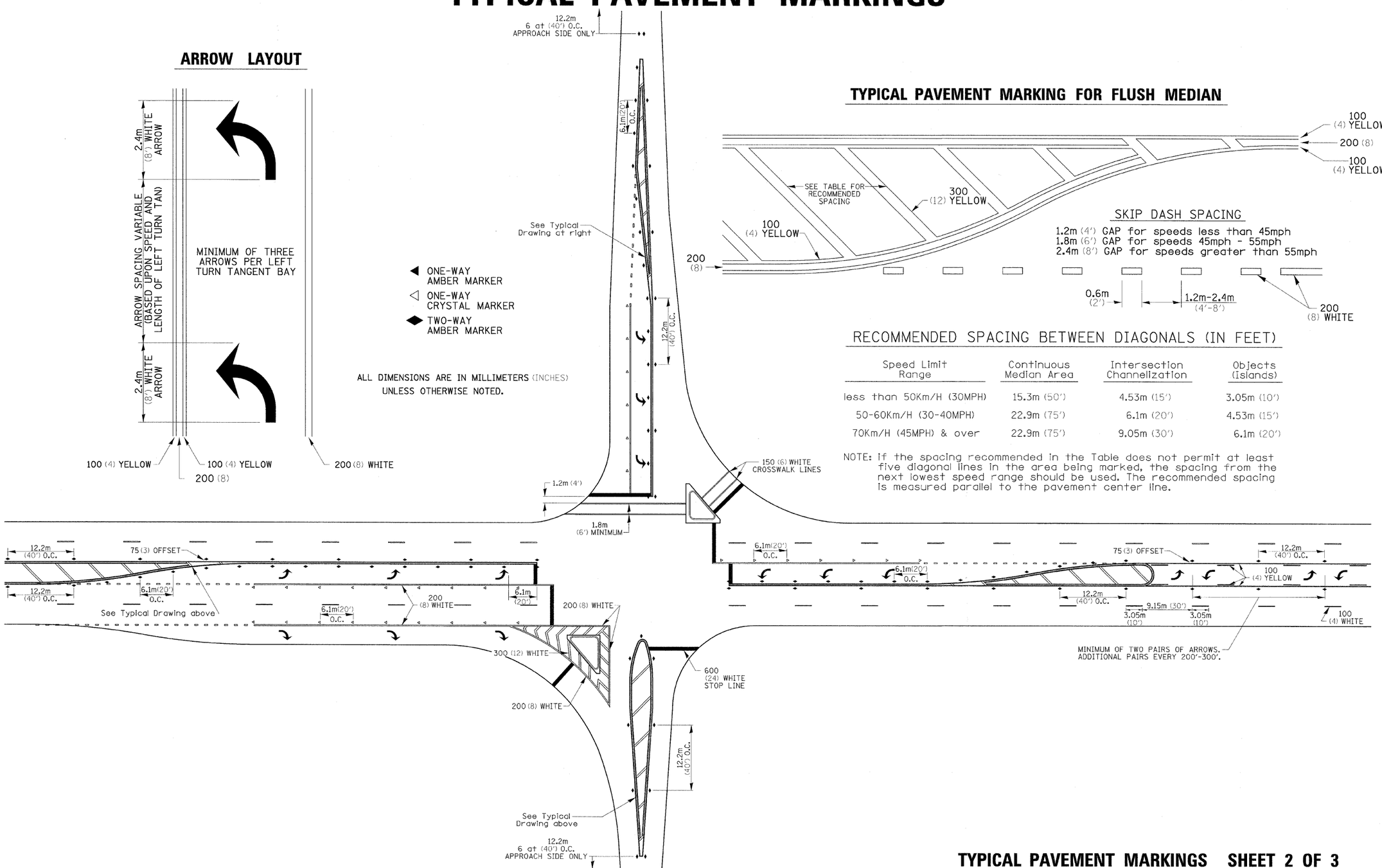

◀ ONE-WAY AMBER MARKER

◁ ONE-WAY CRYSTAL MARKER

◆ TWO-WAY AMBER MARKER

ALL DIMENSIONS ARE IN MILLIMETERS (INCHES) UNLESS OTHERWISE NOTED.

TYPICAL PAVEMENT MARKING FOR FLUSH MEDIAN

SKIP DASH SPACING

1.2m (4') GAP for speeds less than 45mph
1.8m (6') GAP for speeds 45mph - 55mph
2.4m (8') GAP for speeds greater than 55mph

RECOMMENDED SPACING BETWEEN DIAGONALS (IN FEET)

Speed Limit Range	Continuous Median Area	Intersection Channelization	Objects (Islands)
less than 50Km/H (30MPH)	15.3m (50')	4.53m (15')	3.05m (10')
50-60Km/H (30-40MPH)	22.9m (75')	6.1m (20')	4.53m (15')
70Km/H (45MPH) & over	22.9m (75')	9.05m (30')	6.1m (20')

NOTE: If the spacing recommended in the Table does not permit at least five diagonal lines in the area being marked, the spacing from the next lowest speed range should be used. The recommended spacing is measured parallel to the pavement center line.

TYPICAL PAVEMENT MARKINGS SHEET 2 OF 3 41.1

FILE NAME = H:\Projects\2944\DGNS\286207STD2.dgn	USER NAME = $USER$	DESIGNED -	REVISED - 10-21-08	STATE OF ILLINOIS DEPARTMENT OF TRANSPORTATION	REGION 2 / DISTRICT 2 STANDARD	F.A. RTE.	SECTION	COUNTY	TOTAL SHEETS	SHEET NO.
		DRAWN -	REVISED -			55	(W-1-15d)BR-1	WINNEBAGO	59	51
	PLOT SCALE = 1.000 ' / IN.	CHECKED -	REVISED					CONTRACT NO.		
	PLOT DATE = 11/30/2009	DATE -	REVISED -		SCALE: SHEET NO. OF SHEETS STA. TO STA.	FED. ROAD DIST. NO.	ILLINOIS	FED. AID PROJECT		

TYPICAL PAVEMENT MARKINGS

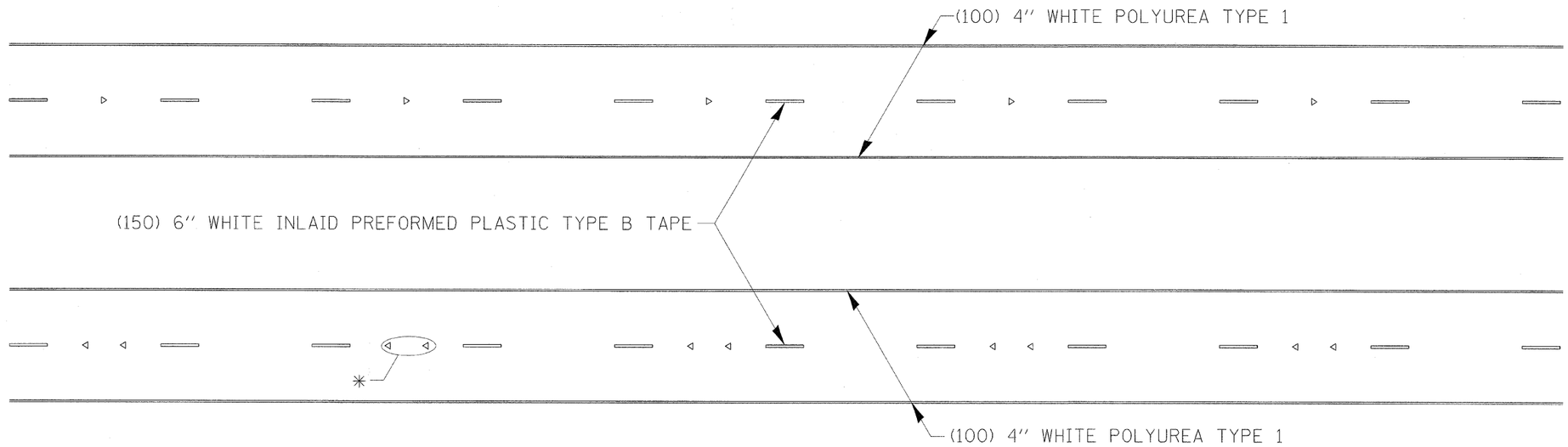

* SEE HIGHWAY STANDARD 781001 FOR SPACING DETAILS.
USE DOUBLE MARKERS WHEN ADT ≥ 25,000.

MULTI–LANE / DIVIDED

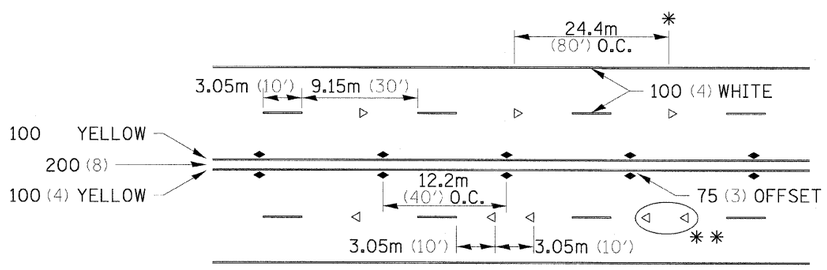

* REDUCE TO 12.2m (40') O.C. ON CURVES WHERE ADVISORY SPEEDS ARE 15Km/H (10MPH) LOWER THAN POSTED SPEEDS.

** USE DOUBLE MARKERS WHEN ADT ≥ 25,000

MULTI–LANE / UNDIVIDED

SYMBOLS

TYPICAL PAVEMENT MARKING FOR TWO LANE SECTION – NO PASSING ZONES

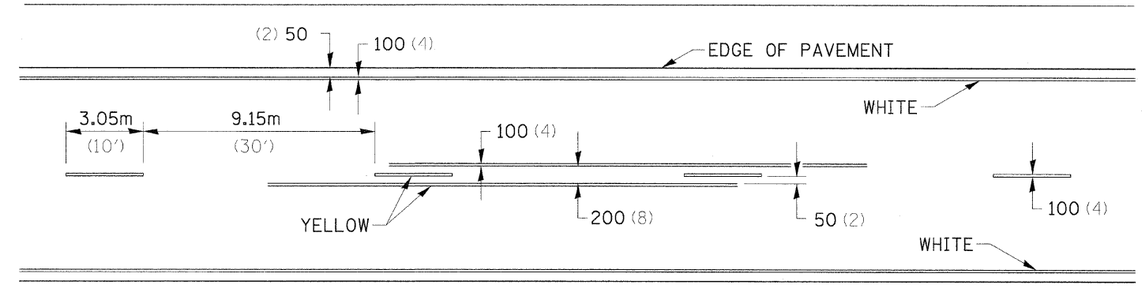

TYPICAL PAVEMENT MARKINGS SHEET 3 OF 3 41.1

FILE NAME = H:\Projects\2944\DGNS\206207STD2.dgn	USER NAME = $USER$	DESIGNED -	REVISED - 10-21-08	STATE OF ILLINOIS DEPARTMENT OF TRANSPORTATION	REGION 2 / DISTRICT 2 STANDARD			F.A. RTE.	SECTION	COUNTY	TOTAL SHEETS / SHEET NO.
		DRAWN -	REVISED -					55	(W-1-15d)BR-1	WINNEBAGO	59 / 52
	PLOT SCALE = 1.000 ' / IN.	CHECKED -	REVISED -							CONTRACT NO.	
	PLOT DATE = 11/30/2009	DATE -	REVISED -		SCALE:	SHEET NO. OF SHEETS	STA. TO STA.	FED. ROAD DIST. NO.	ILLINOIS	FED. AID PROJECT	

DETAILS OF PLANTING AND BRACING TREES

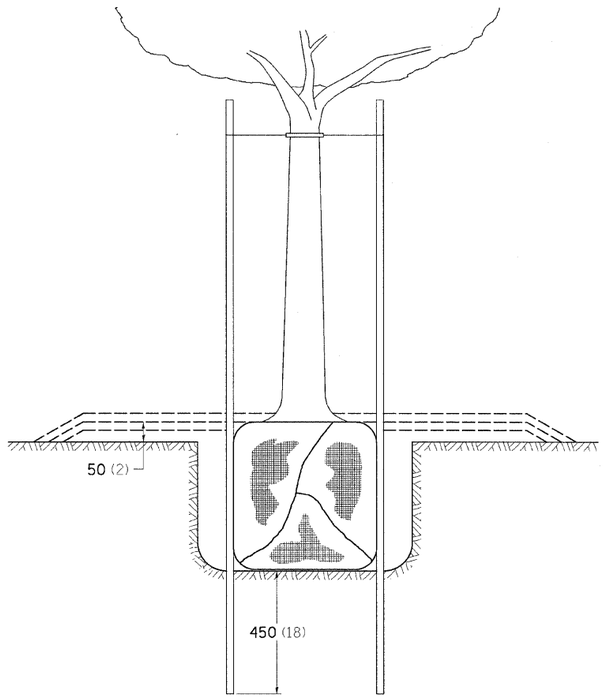

TREES SMALLER THAN 115 (4½) IN DIAMETER

SMALL TREE SIZE	A DIAMETER OF BALL OR ROOT SYS.	B DEPTH OF HOLE EXCAVATION	C WIDTH OF HOLE EXCAVATION	D THICKNESS OF MULCH COVER	E DEPTH OF BALL OR ROOT SYS.	F VOLUME OF MULCH COVER m^3 (CU. YDS.)
1.5-1.8m (5'-6')	400 (16)	250 (10)	750 (30)	100 (4)	300 (12)	0.41 (0.54)
1.5-1.8m (5'-6') BB	400 (16)	250 (10)	750 (30)	100 (4)	300 (12)	0.41 (0.54)
1.8-2.0m (6'-7') BB	450 (18)	300 (12)	750 (30)	100 (4)	350 (14)	0.41 (0.54)
2.0-2.4m (7'-8') BB	500 (20)	275 (11)	750 (30)	100 (4)	325 (13)	0.41 (0.54)
2.4-3.0m (8'-10') BB	600 (24)	350 (14)	900 (36)	100 (4)	400 (16)	0.47 (0.61)
3.0-3.6m (10'-12') BB	650 (26)	375 (15)	900 (36)	100 (4)	425 (17)	0.47 (0.61)

LARGE TREE SIZE	A DIAMETER OF BALL OR ROOT SYS.	B DEPTH OF HOLE EXCAVATION	C WIDTH OF HOLE EXCAVATION	D THICKNESS OF MULCH COVER	E DEPTH OF BALL OR ROOT SYS.	F VOLUME OF MULCH COVER m^3 (CU. YDS.)
0-50 (0-2)	500 (20)	275 (11)	900 (36)	100 (4)	325 (13)	0.47 (0.61)
50-65 (2-2½)BB	600 (24)	350 (14)	1200 (48)	100 (4)	400 (16)	0.60 (0.78)
65-75 (2½-3)BB	700 (28)	425 (17)	1200 (48)	100 (4)	475 (19)	0.60 (0.78)
75-90 (3-3½) BB	800 (32)	425 (17)	1500 (60)	100 (4)	475 (19)	0.73 (0.96)
90-100 (3½-4) BB	900 (36)	500 (20)	1500 (60)	100 (4)	550 (22)	0.73 (0.96)
100-115 (4-4½) BB	1000 (40)	550 (22)	1800 (72)	100 (4)	600 (24)	0.89 (1.16)
115-125 (4½-5) BB	1100 (44)	600 (24)	1800 (72)	100 (4)	650 (26)	0.89 (1.16)
125-140 (5-5½) BB	1200 (48)	675 (27)	2100 (84)	100 (4)	725 (29)	1.06 (1.38)

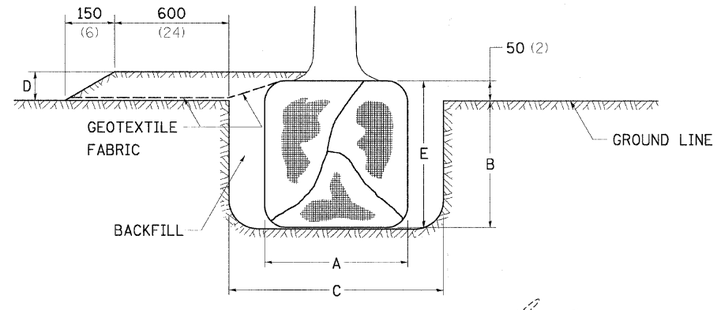

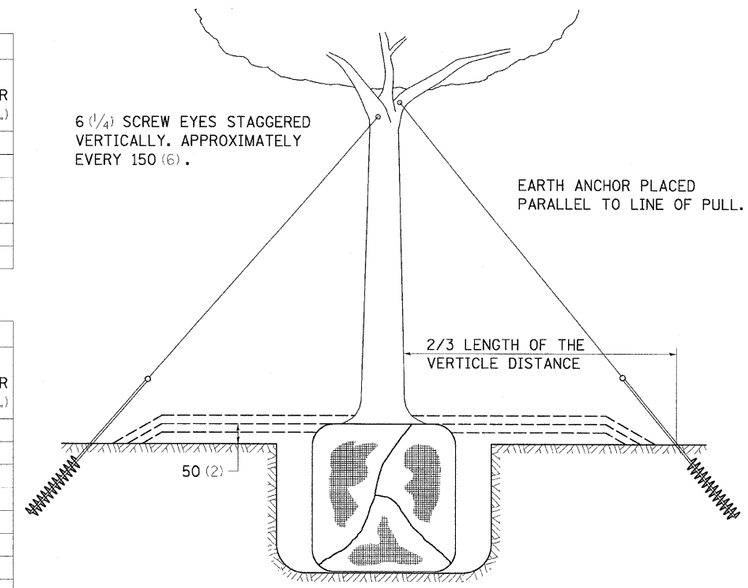

TREES OVER 115 (4½) IN DIAMETER

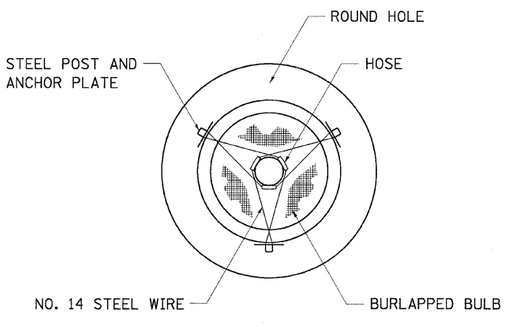

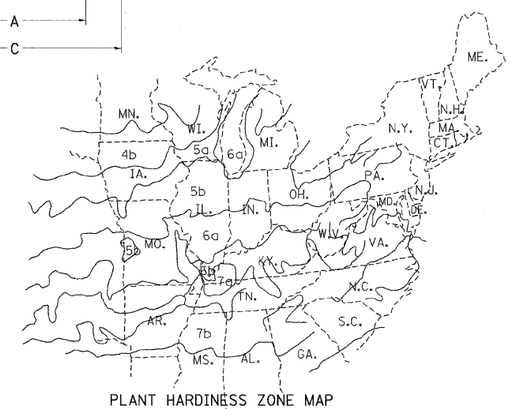

PLANT HARDINESS ZONE MAP

U.S. DEPARTMENT OF AGRICULTURE
AGRICULTURAL RESEARCH SERVICE
PUBLICATION NO. 814

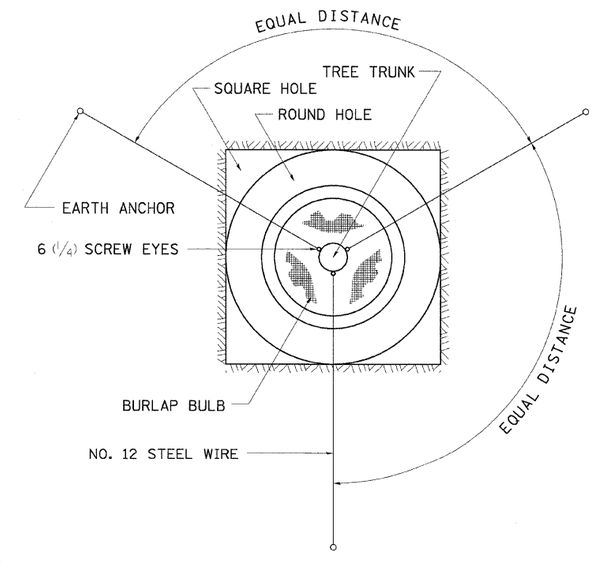

ALL DIMENSIONS ARE IN MILLIMETERS (INCHES)
UNLESS OTHERWISE NOTED.

DETAILS OF PLANTING AND BRACING TREES **92.1**

FILE NAME = H:\Projects\2944\DGNS\Z06207STD2.dgn	USER NAME = $USER$	DESIGNED -	REVISED - 10-15-04	STATE OF ILLINOIS DEPARTMENT OF TRANSPORTATION	REGION 2 / DISTRICT 2 STANDARD	F.A. RTE. 55	SECTION (W-1-15d)BR-1
		DRAWN -	REVISED -			COUNTY WINNEBAGO	TOTAL SHEETS 59 / SHEET NO. 53
	PLOT SCALE = 1.000 ' / IN.	CHECKED -	REVISED -			CONTRACT NO. 64D22	
	PLOT DATE = 11/30/2009	DATE -	REVISED -		SCALE: SHEET NO. OF SHEETS STA. TO STA.	FED. ROAD DIST. NO.	ILLINOIS FED. AID PROJECT

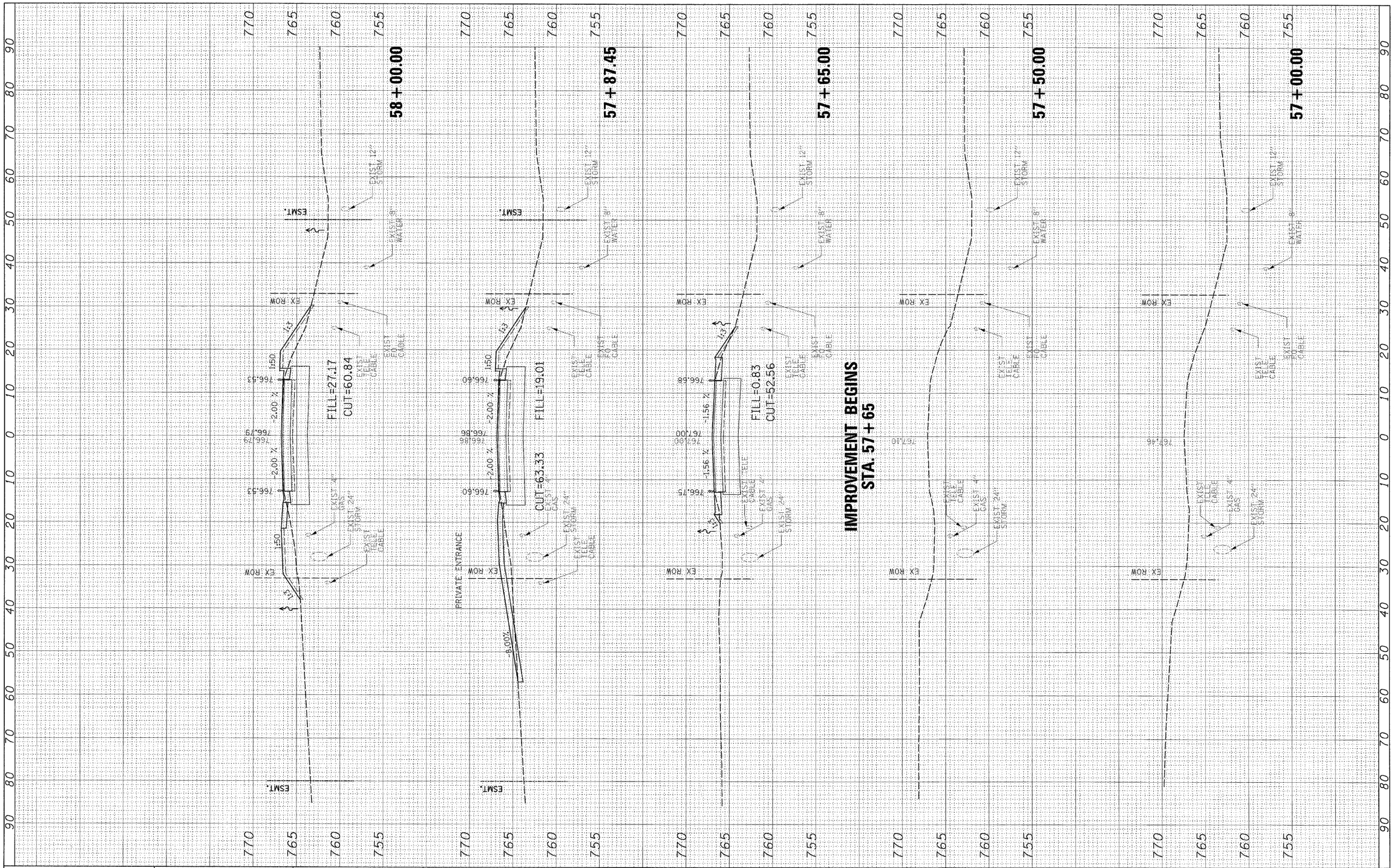

FINAL SURVEY	SURVEYED / PLOTTED / TEMPLATE / AREAS / AREAS CHECKED	BY	DATE
NOTE BOOK			
NO.			

ORIGINAL SURVEY	SURVEYED / PLOTTED / TEMPLATE / AREAS / AREAS CHECKED	BY	DATE
NOTE BOOK			
NO.			

FILE NAME = H:\Projects\2944\DGNS\Z06207XSEC.dgn

USER NAME = $USER$

PLOT SCALE = 10.0000 ' / IN.

PLOT DATE = 11/30/2009

DESIGNED -	REVISED -
DRAWN -	REVISED -
CHECKED -	REVISED -
DATE -	REVISED -

STATE OF ILLINOIS
DEPARTMENT OF TRANSPORTATION

CROSS SECTIONS

SCALE: | SHEET NO. OF SHEETS | STA. 57+00.00 TO STA. 58+00.00

F.A. RTE.	SECTION	COUNTY	TOTAL SHEETS	SHEET NO.
55	(W-1-15d)BR-1	WINNEBAGO	59	54

CONTRACT NO. 64D22

FED. ROAD DIST. NO. | ILLINOIS | FED. AID PROJECT

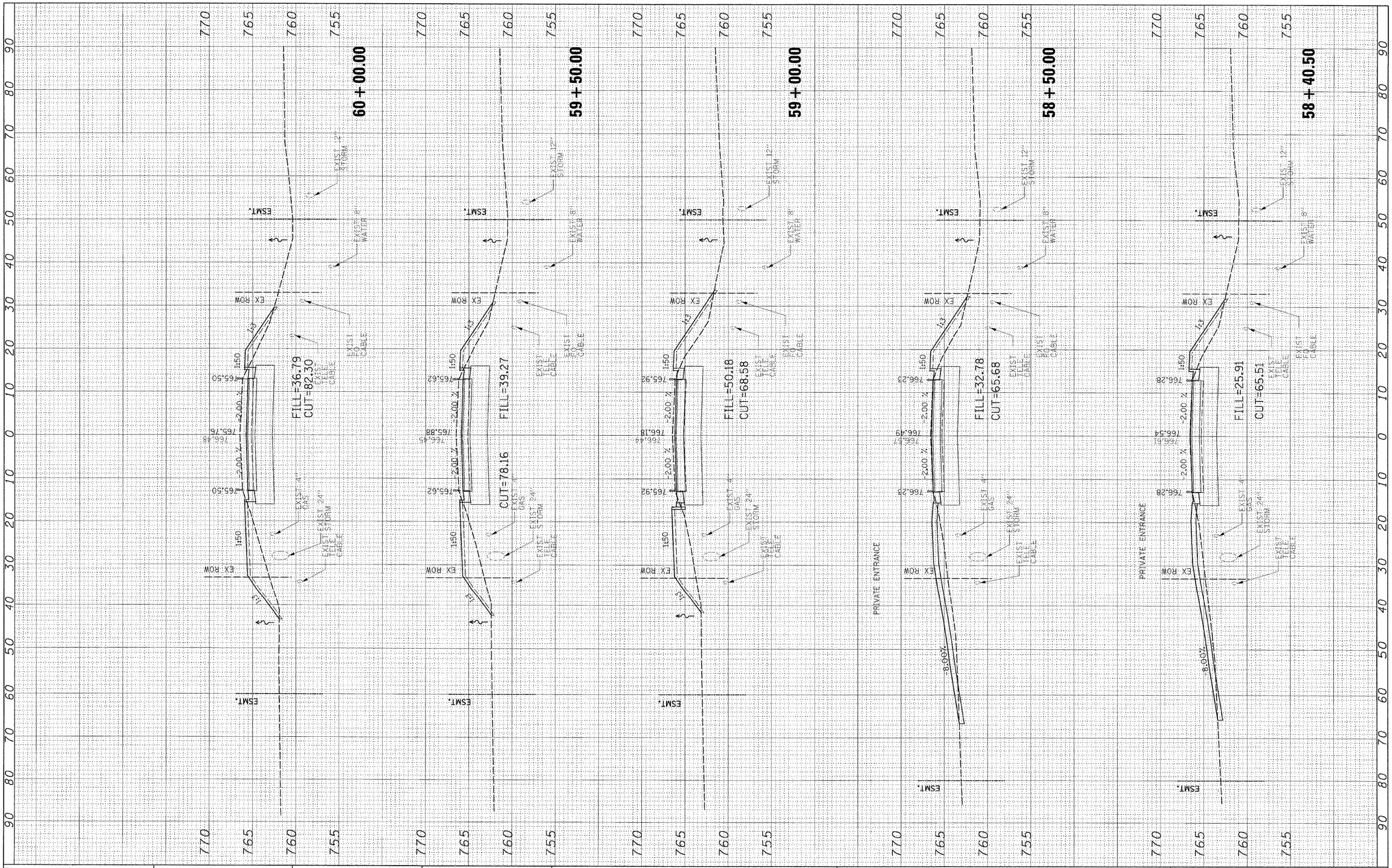

FINAL SURVEY	SURVEYED	BY	DATE
	PLOTTED		
NOTE BOOK	TEMPLATE		
	AREAS		
NO.	AREAS CHECKED		

ORIGINAL SURVEY	SURVEYED	BY	DATE
	PLOTTED		
NOTE BOOK	TEMPLATE		
	AREAS		
NO.	AREAS CHECKED		

FILE NAME = H:\Projects\2944\DGNS\Z86207XSEC.dgn	USER NAME = $USER$	DESIGNED -	REVISED -
		DRAWN -	REVISED -
	PLOT SCALE = 10.0000 ' / IN.	CHECKED -	REVISED -
	PLOT DATE = 11/30/2009	DATE -	REVISED -

STATE OF ILLINOIS
DEPARTMENT OF TRANSPORTATION

CROSS SECTIONS

SCALE: | SHEET NO. OF SHEETS | STA. 58+40.5000 TO STA. 60+00.00

F.A. RTE.	SECTION	COUNTY	TOTAL SHEETS	SHEET NO.
55	(W-1-15d)BR-1	WINNEBAGO	59	55
		CONTRACT NO. 64D22		
FED. ROAD DIST. NO.	ILLINOIS	FED. AID PROJECT		

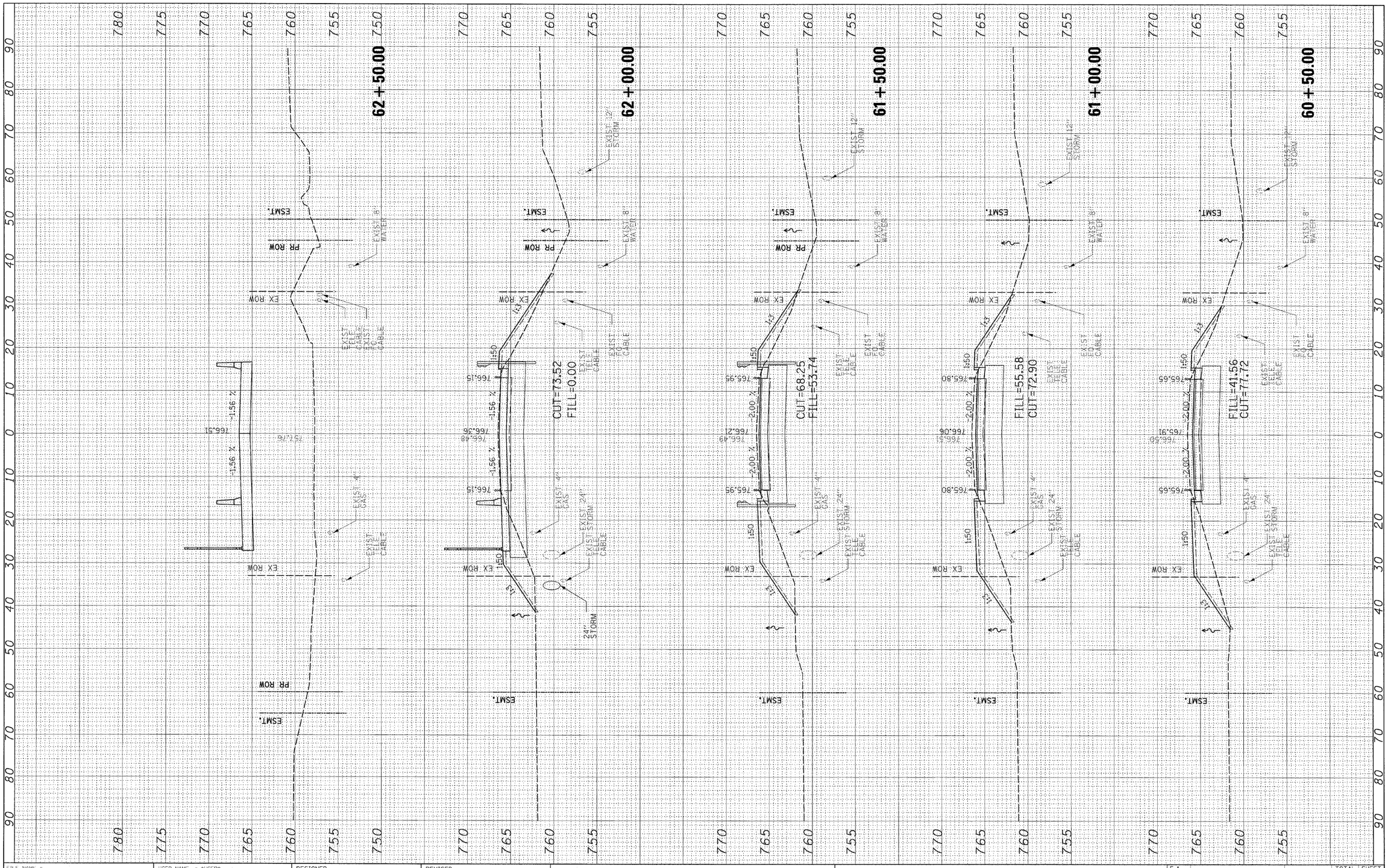

FINAL SURVEY	SURVEYED	BY	DATE
	PLOTTED		
NOTE BOOK	TEMPLATE		
	AREAS		
NO.	AREAS CHECKED		

ORIGINAL SURVEY	SURVEYED	BY	DATE
	PLOTTED		
NOTE BOOK	TEMPLATE		
	AREAS		
NO.	AREAS CHECKED		

FILE NAME =	USER NAME = $USER$	DESIGNED -	REVISED -
H:\Projects\2944\DGNS\Z06207XSEC.dgn		DRAWN -	REVISED -
	PLOT SCALE = 10.0000 ' / IN.	CHECKED -	REVISED -
	PLOT DATE = 11/30/2009	DATE -	REVISED -

STATE OF ILLINOIS
DEPARTMENT OF TRANSPORTATION

CROSS SECTIONS

SCALE: | SHEET NO. OF SHEETS | STA. 60+50.00 TO STA. 62+50.00

F.A. RTE.	SECTION	COUNTY	TOTAL SHEETS	SHEET NO.
55	(W-1-15d)BR-1	WINNEBAGO	59	56
		CONTRACT NO. 64D22		
FED. ROAD DIST. NO.	ILLINOIS	FED. AID PROJECT		

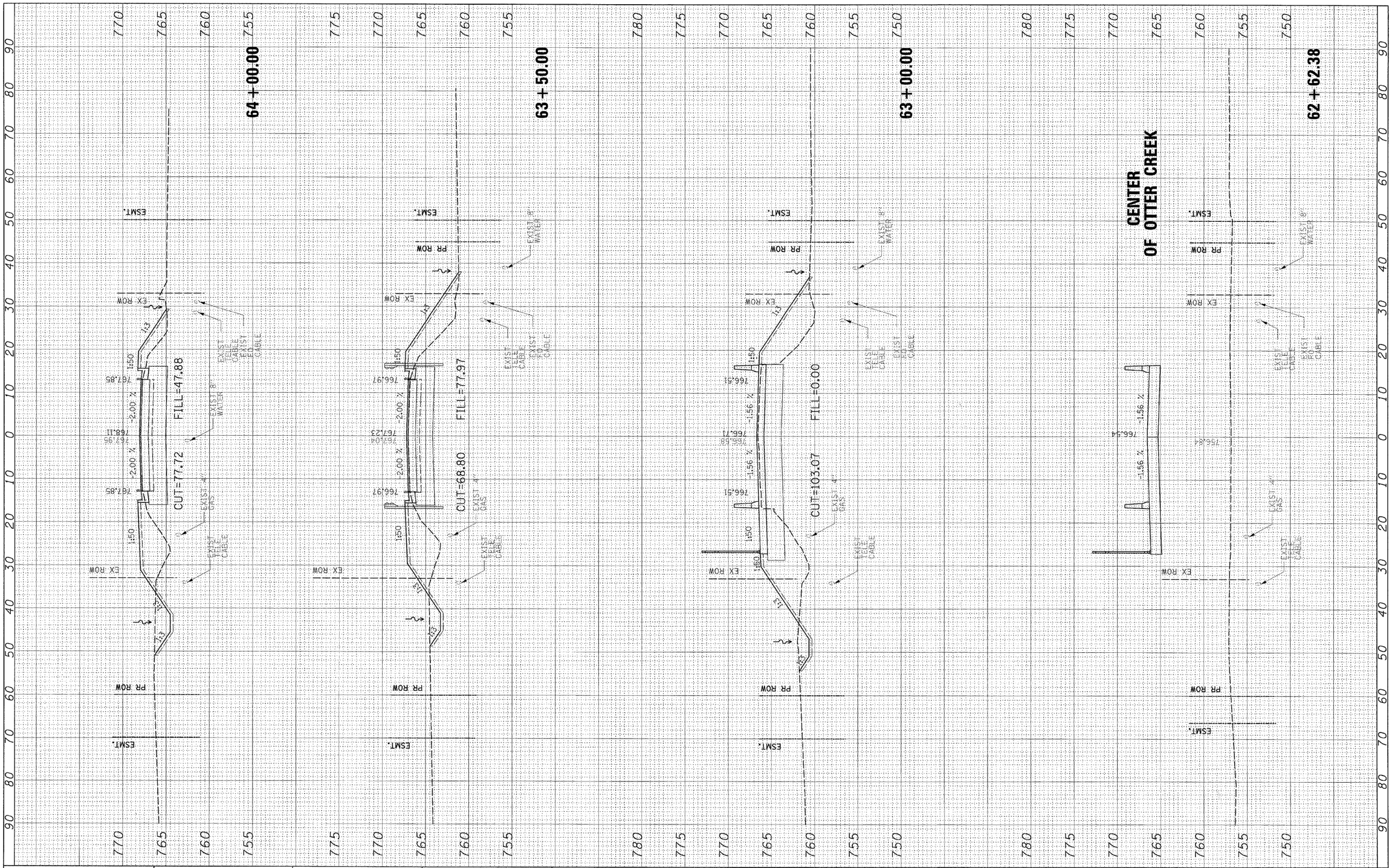

FINAL SURVEY	BY	DATE
NOTE BOOK NO.	SURVEYED	
	PLOTTED	
	TEMPLATE	
	AREAS	
	AREAS CHECKED	

ORIGINAL SURVEY	BY	DATE
NOTE BOOK NO.	SURVEYED	
	PLOTTED	
	TEMPLATE	
	AREAS	
	AREAS CHECKED	

FILE NAME = H:\Projects\2944\DGNS\Z06207XSEC.dgn	USER NAME = $USER$	DESIGNED -	REVISED -
		DRAWN -	REVISED -
	PLOT SCALE = 10.0000 ' / IN.	CHECKED -	REVISED -
	PLOT DATE = 11/30/2009	DATE -	REVISED -

STATE OF ILLINOIS
DEPARTMENT OF TRANSPORTATION

CROSS SECTIONS

SCALE: | SHEET NO. OF SHEETS | STA. 62+62.3800 TO STA. 64+00.00

F.A. RTE.	SECTION	COUNTY	TOTAL SHEETS	SHEET NO.
55	(W-1-15d)BR-1	WINNEBAGO	59	57
		CONTRACT NO. 64D22		
FED. ROAD DIST. NO.	ILLINOIS	FED. AID PROJECT		

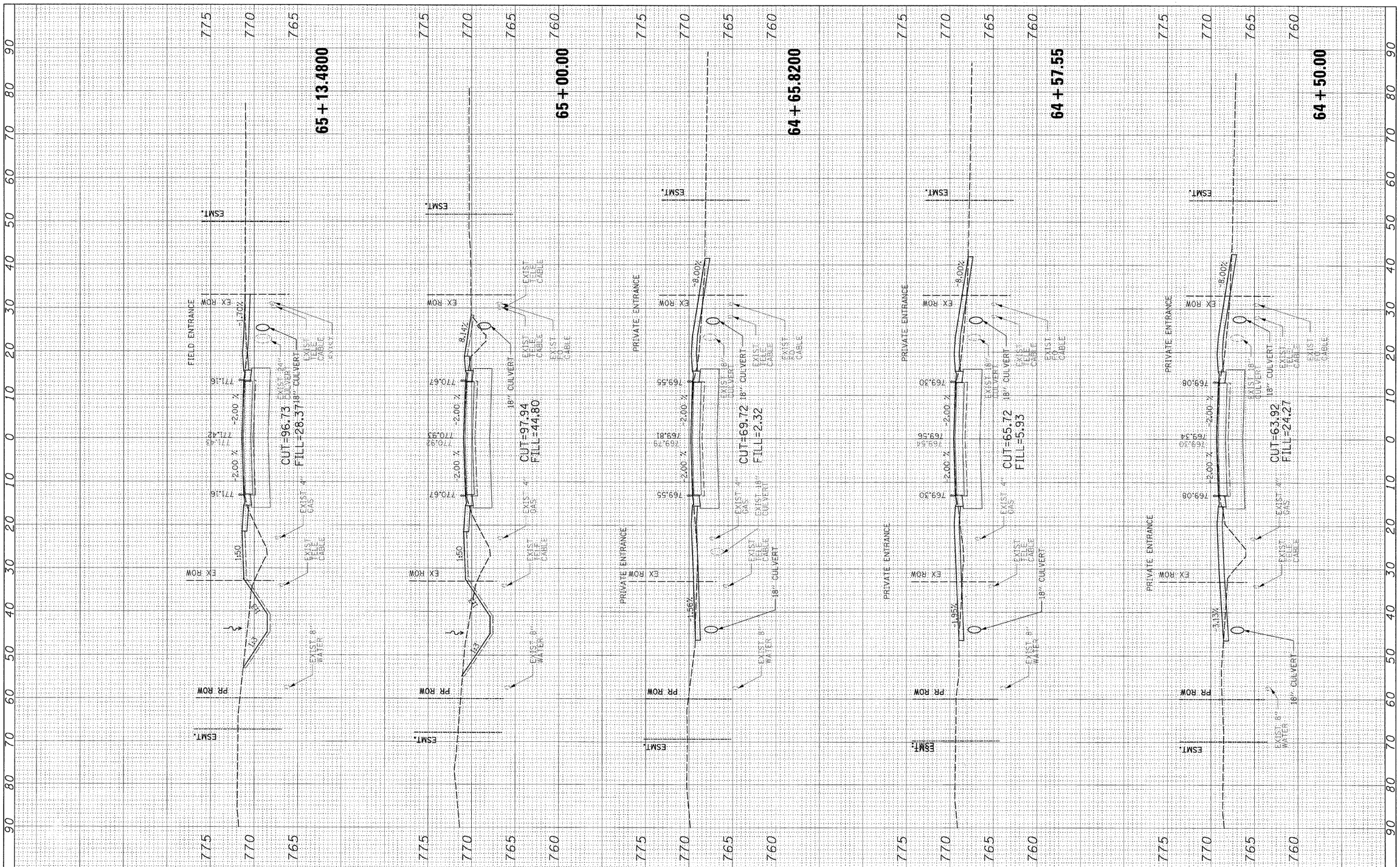

FINAL SURVEY	SURVEYED	BY	DATE
	PLOTTED		
NOTE BOOK	TEMPLATE		
	AREAS		
NO.	AREAS CHECKED		

ORIGINAL SURVEY	SURVEYED	BY	DATE
	PLOTTED		
NOTE BOOK	TEMPLATE		
	AREAS		
NO.	AREAS CHECKED		

FILE NAME =
H:\Projects\2944\DGNS\Z06207XSEC.dgn

USER NAME = $USER$	DESIGNED -	REVISED -	
	DRAWN -	REVISED -	
PLOT SCALE = 10.0000 ' / IN.	CHECKED -	REVISED -	
PLOT DATE = 11/30/2009	DATE -	REVISED -	

STATE OF ILLINOIS
DEPARTMENT OF TRANSPORTATION

CROSS SECTIONS

SCALE: | SHEET NO. OF SHEETS | STA. 64+50.00 TO STA. 65+13.4800

F.A. RTE.	SECTION	COUNTY	TOTAL SHEETS	SHEET NO.
55	(W-1-15)BR-1	WINNEBAGO	59	58

CONTRACT NO. 64D22

FED. ROAD DIST. NO. | ILLINOIS | FED. AID PROJECT

FINAL SURVEY	SURVEYED	BY	DATE
NOTE BOOK	PLOTTED		
NO.	TEMPLATE		
	AREAS		
	AREAS CHECKED		

ORIGINAL SURVEY	SURVEYED	BY	DATE
NOTE BOOK	PLOTTED		
NO.	TEMPLATE		
	AREAS		
	AREAS CHECKED		

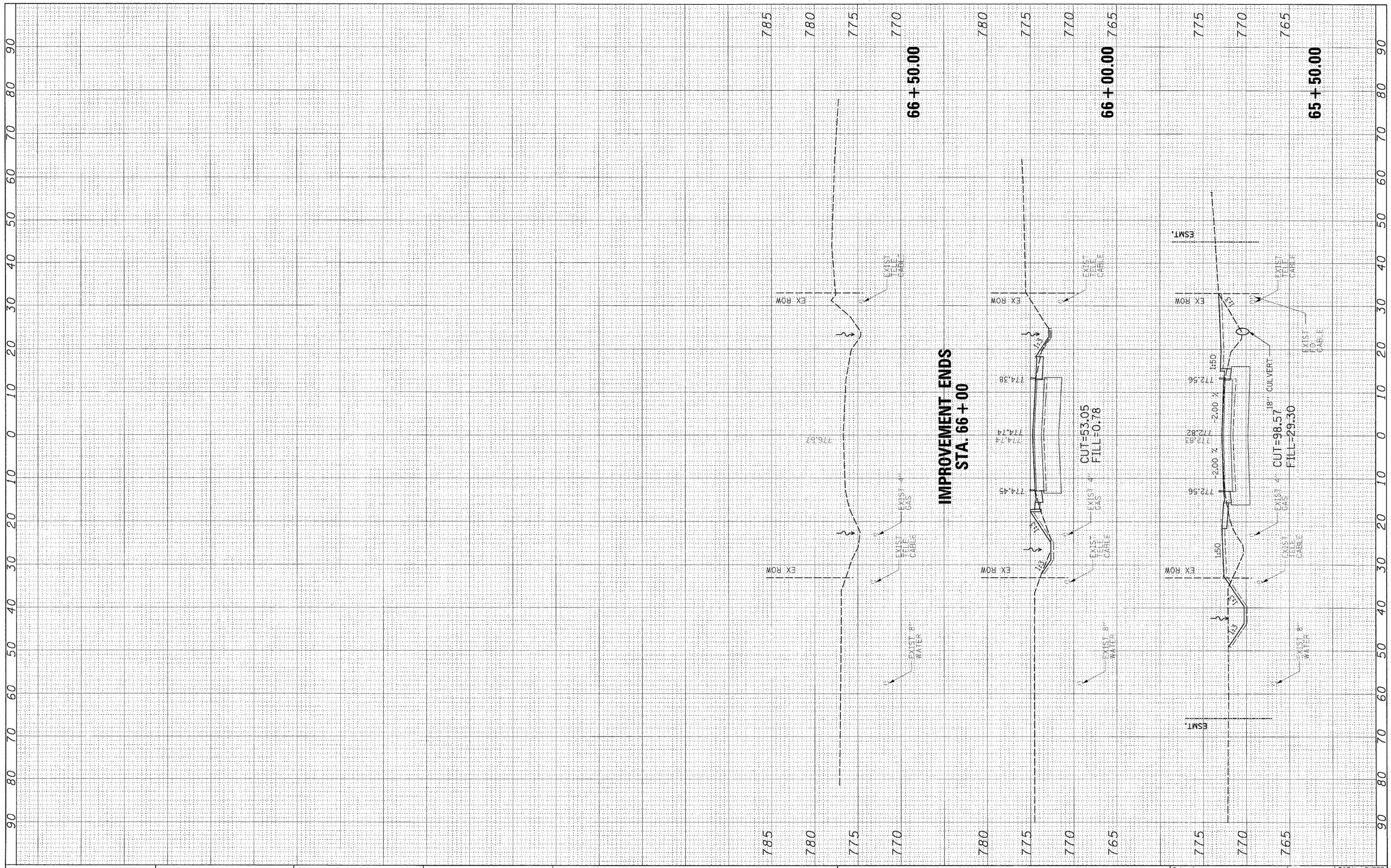

FILE NAME = H:\Projects\2944\DGNS\Z06207XSEC.dgn
USER NAME = $USER$
PLOT SCALE = 10.0000 ' / IN.
PLOT DATE = 11/30/2009

DESIGNED -
DRAWN -
CHECKED -
DATE -

REVISED -
REVISED -
REVISED -
REVISED -

STATE OF ILLINOIS
DEPARTMENT OF TRANSPORTATION

CROSS SECTIONS

SCALE: SHEET NO. OF SHEETS STA. 65+50.00 TO STA. 66+50.00

F.A. RTE.	SECTION	COUNTY	TOTAL SHEETS	SHEET NO.
55	(W-1-15d)BR-1	WINNEBAGO	59	59

CONTRACT NO. 64D22

FED. ROAD DIST. NO. ILLINOIS FED. AID PROJECT