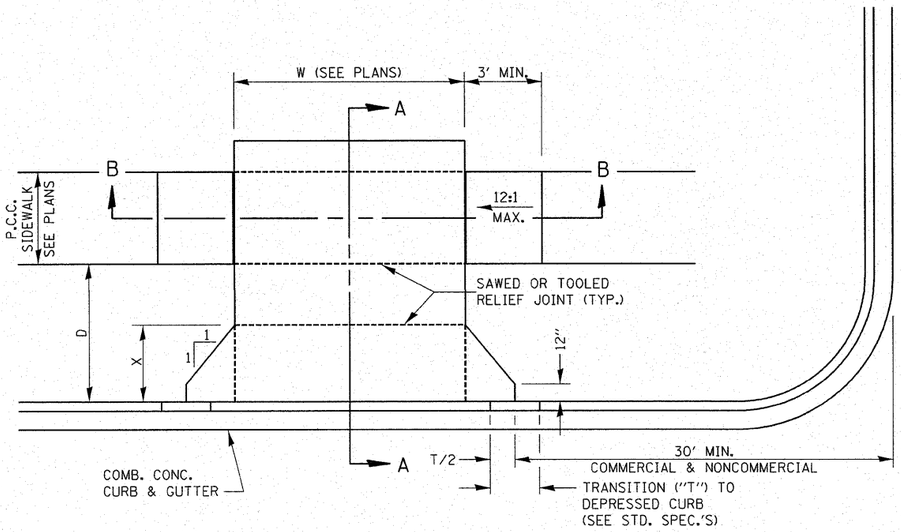

CASE I (D ≥ X)

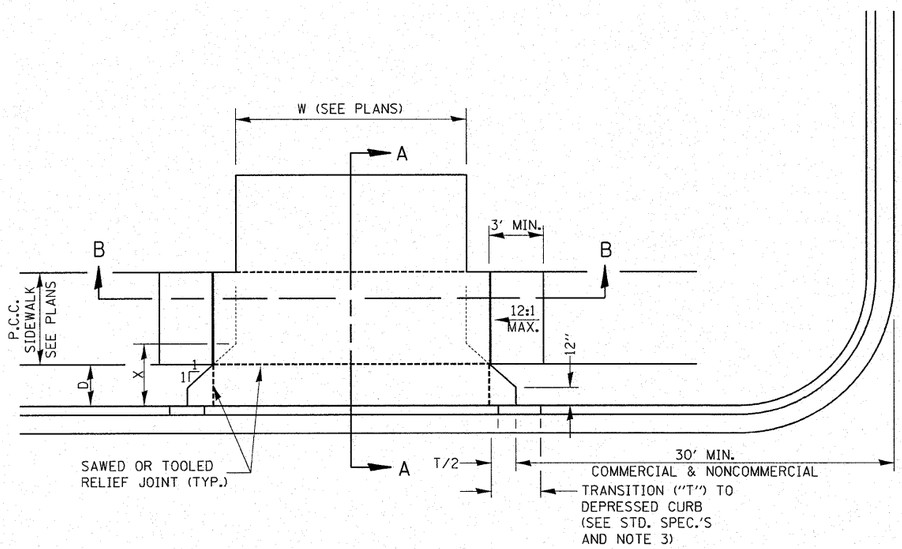

CASE I (D < X)

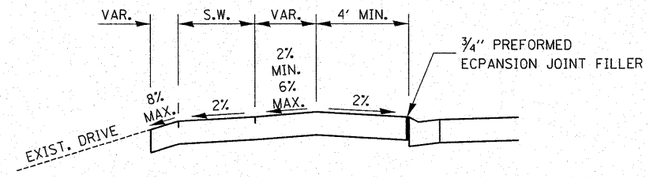

DEPRESSED ENTRANCE*
SECTION A-A

*(SEE X-SECTIONS FOR ENTRANCE PROFILE.)

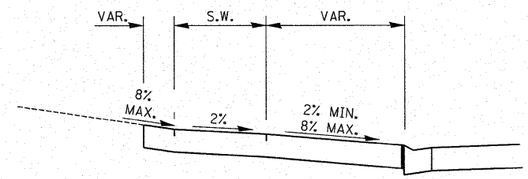

ELEVATED ENTRANCE *
SECTION A-A

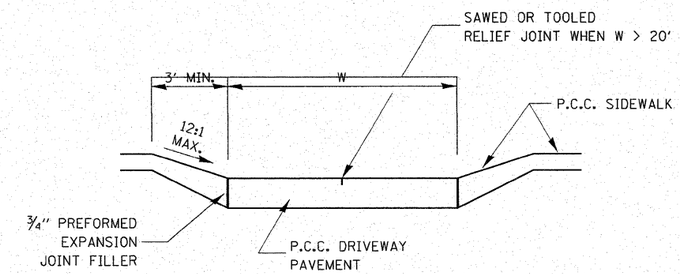

SECTION B-B

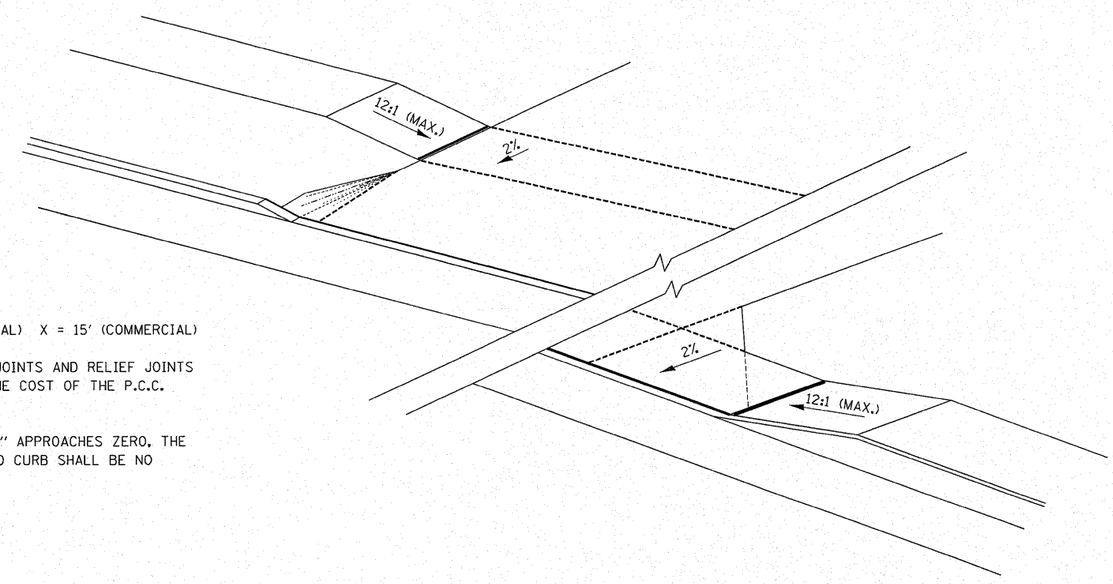

GENERAL NOTES:

1. X = 7' (NON-COMMERCIAL) X = 15' (COMMERCIAL)

2. COST OF EXPANSION JOINTS AND RELIEF JOINTS SHALL BE INCLUDED IN THE COST OF THE P.C.C. DRIVEWAY PAVEMENT.

3. AS THE DIMENSION "D" APPROACHES ZERO, THE TRANSITION TO DEPRESSED CURB SHALL BE NO STEEPER THAN 12:1

PCC URBAN ENTRANCES

423–1

FILE NAME = W:\2183.03-IDOT IL 116 Plans\DGN\Sheet Files\Z02300DET.dgn	USER NAME = IDOTCAD	DESIGNED - SPF	REVISED -	STATE OF ILLINOIS DEPARTMENT OF TRANSPORTATION	DETAILS	F.A.P. RTE.	SECTION	COUNTY	TOTAL SHEETS	SHEET NO.
		DRAWN - FJS	REVISED -			681	114 RS-2	LIVINGSTON	63	42
	PLOT SCALE = 1.0000 ' / IN.	CHECKED - JMS	REVISED -					CONTRACT NO. 66532		
	PLOT DATE = 9/18/2009	DATE - 09/25/09	REVISED -		SCALE: SHEET NO. 04 OF 09 SHEETS STA. TO STA.	FED. ROAD DIST. NO.	ILLINOIS	FED. AID PROJECT		