NB Sta. 167+00
NB Sta. 171+01
NB Sta. 213+33.08
NB Sta. 399+55.82
SB Sta. 167+10
SB Sta. 171+05
SB Sta. 500+39.39
SB Sta. 213+05.12

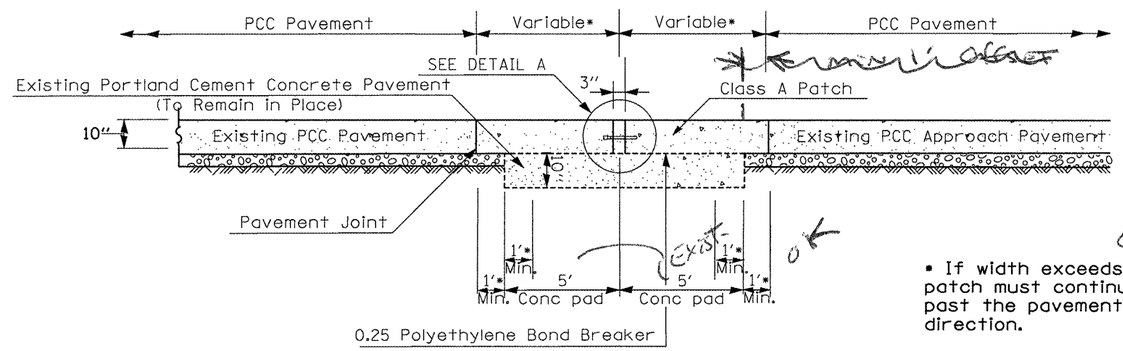

* If width exceeds 4', the patch must continue at least 1' past the pavement joint in either direction.

PROPOSED EXPANSION JOINTS

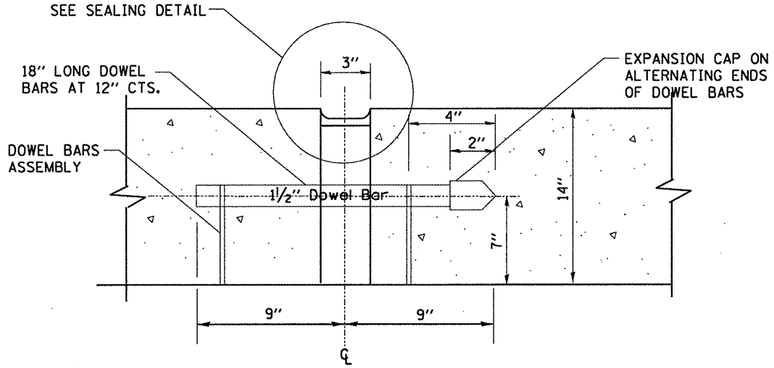

DETAIL A

* FOR EXPANSION JOINTS FORMED USING A CONSTRUCTION HEADER, THE EXPANSION CAPS SHALL BE INSTALLED ON THE EXPOSED END OF EACH BAR ONCE THE HEADER HAS BEEN REMOVED AND THE JOINT FILLER MATERIAL HAS BEEN INSTALLED.

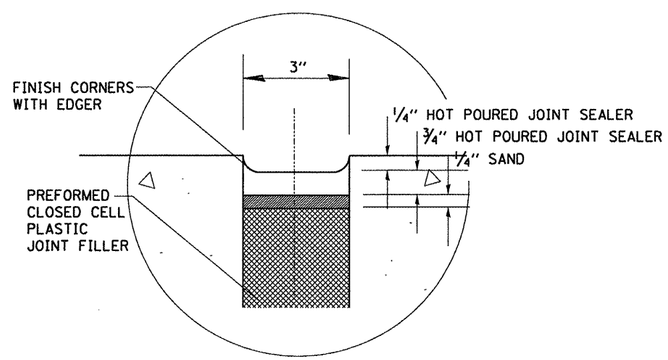

SEALING DETAIL

GENERAL NOTES:

See Standard 421001 for reinforcement details not shown.

Joint sealer in included in the cost for Class A Patches.

All bars are epoxy coated.

Class A Patches are variable in width.

Dowl bars are paid per each.

FILE NAME = i74.dgn	USER NAME = eversol	DESIGNED -	REVISED -	STATE OF ILLINOIS DEPARTMENT OF TRANSPORTATION	EXPANSION JOINT DETAIL	F.A.P. RTE.	SECTION	COUNTY	TOTAL SHEETS	SHEET NO.
		DRAWN -	REVISED -			318	72-(7)RS-2,(1,7-1)1	PEORIA	30	19
	PLOT SCALE = 400.0000 ' / IN.	CHECKED -	REVISED -					CONTRACT NO. 68847		
	PLOT DATE = 12/14/2009	DATE -	REVISED -		SCALE: SHEET NO. OF SHEETS STA. TO STA.			ILLINOIS FED. AID PROJECT		