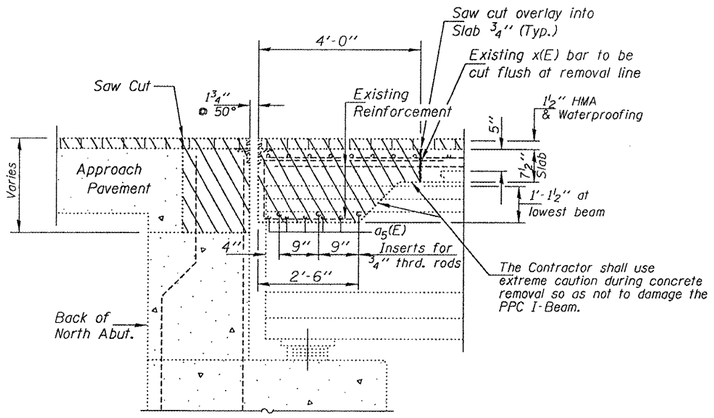

SECTION A-A

(At Rt. L's Showing Removal)

Notes:
Hatched areas indicate Concrete Removal.

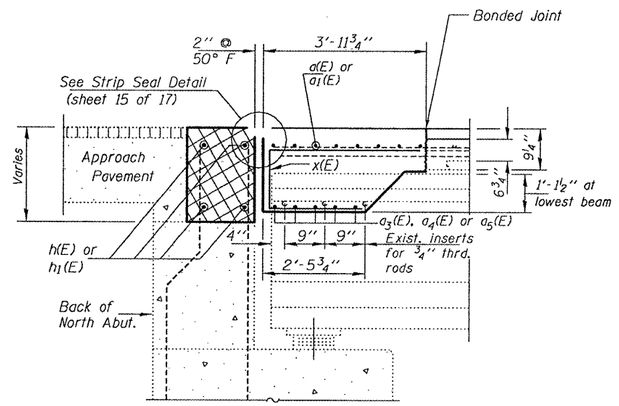

SECTION A-A

(At Rt. L's Showing Replacement)

Notes:
Cross hatched areas to be poured after superstructure concrete is in place. Concrete quantity is included with Concrete Superstructure.
Existing threaded rods to be incorporated into new construction. Cost included with concrete removal.

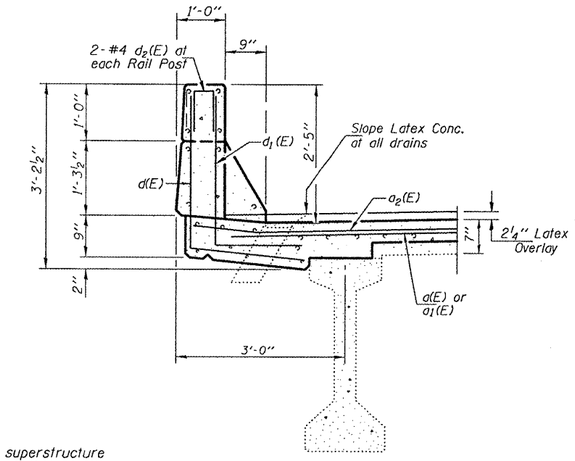

SECTION THRU PARAPET

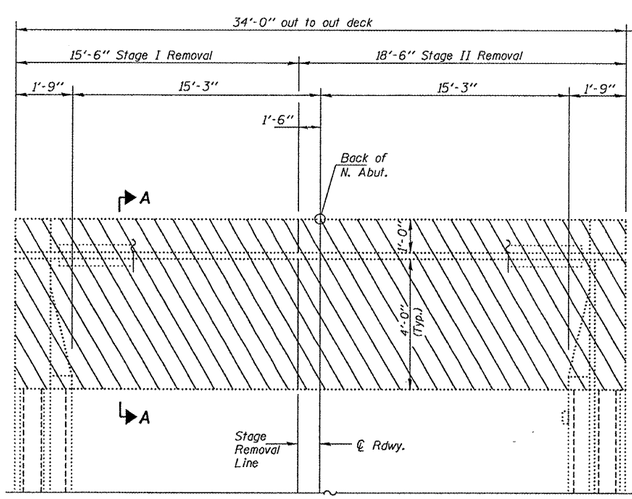

EXISTING PARTIAL PLAN

(View showing Removal)

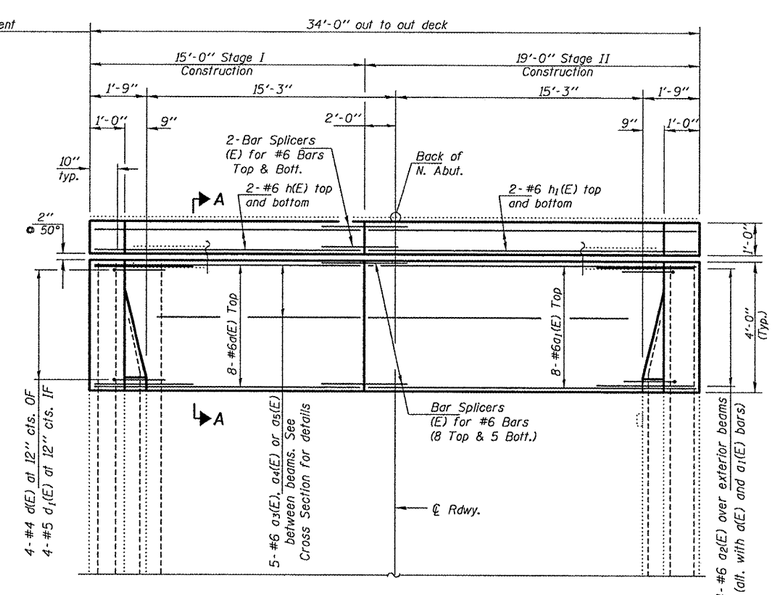

PROPOSED PARTIAL PLAN

(View showing Replacement)

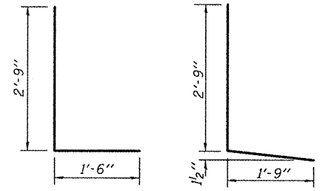

BAR d1(E) BAR d(E)

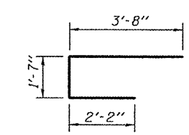

BAR x(E)

Existing Concrete Removal

S:\GEN\DRAFT\STD&PLNS\SQUAD14\BRIDGE CONTRACTS\JOINTS\JOINTS\Joints w-Overlay\68928 SN102-0041\IL117ovr_MillCrk.dgn

SN. 102-0041 IL.117 ovr MILL CRK. S. of US24

FILE NAME = $FILEL$	USER NAME = $USER$	DESIGNED - CEJ	REVISED -	STATE OF ILLINOIS DEPARTMENT OF TRANSPORTATION	NORTH ABUTMENT JOINT DETAIL	RTE.	SECTION	COUNTY	TOTAL SHEETS	SHEET NO.
		DRAWN - CEJ	REVISED -			702	(114BR-1)I	WOODFORD	23	17
	PLOT SCALE = $SCALE$	CHECKED -	REVISED -			MISC. BRIDGE REPAIRS		CONTRACT NO. 68928		
	PLOT DATE = $DATE$	DATE - 09/17/2009	REVISED -		SCALE: SHEET NO. OF SHEETS STA. TO STA.	FED. ROAD DIST. NO. 4	ILLINOIS	FED. AID PROJECT		

1020041.dgn 1/19/2010 3:13:35 PM