3-5-10 LETTING ITEM 124

| F.A.P. RTE. | SECTION | COUNTY | TOTAL SHEETS | SHEET NO. |
|---|---|---|---|---|
| 709 | (105BR)BR | CHAMPAIGN | 55 ★ | 1 |
| FED. ROAD DIST. NO. 5 | ILLINOIS | CONTRACT NO. 70427 | | |

★ 55+1 = 56

# STATE OF ILLINOIS
# DEPARTMENT OF TRANSPORTATION
# DIVISION OF HIGHWAYS

# PROPOSED HIGHWAY PLANS

## FAP ROUTE 709 (US RTE 136)
## SECTION (105BR)BR
## PROJECT BRF-0709(026)
## BRIDGE REPLACEMENT
## CHAMPAIGN COUNTY

C-95-071-04
WILDCAT SLOUGH EAST OF FISHER

D-95-068-04

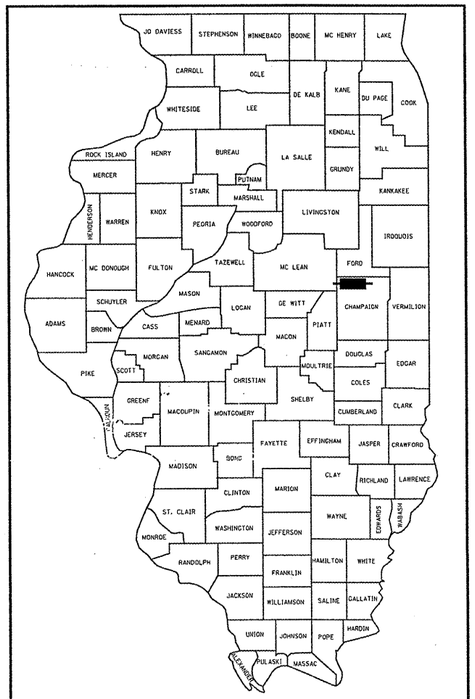


LOCATION OF SECTION INDICATED THUS:- ■

BEGIN SECTION (105BR)BR
STATION 1891+00.00

END SECTION (105BR)BR
STATION 1895+00.00

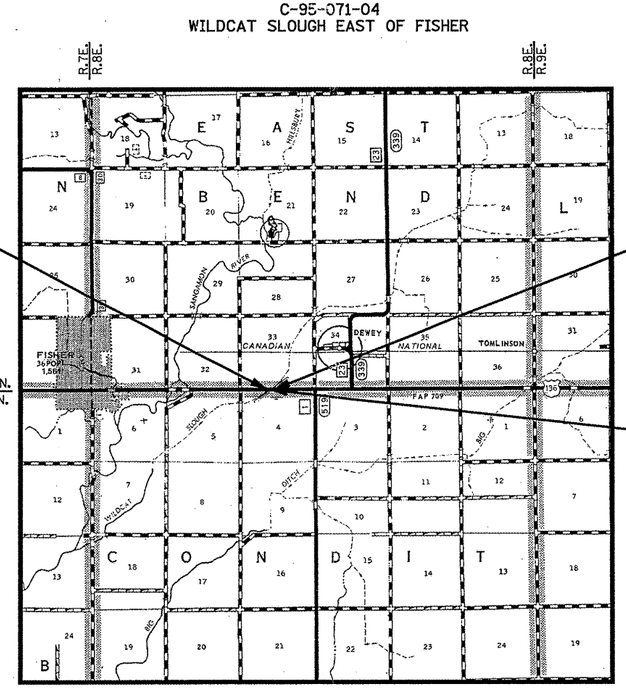


LOCATION MAP SCALE: 1/2" = 5280' (1 MILE)
0 1 2 MILES

GROSS AND NET LENGTH OF IMPROVEMENT = 400 FEET = 0.076 MILES

PROPOSED S.N. 010-0283
EXISTING S.N. 010-0062
US 136 ℄ STA 1893+15.65
STEEL I-BEAM ON STUB ABUT.
136'-1" BK. TO BK. ABUT.
45° LT. FWD. SKEW;
CLEAR WIDTH =32'-0"

### DESIGN DESIGNATION

ROADWAY: MINOR ARTERIAL (NON URBAN)
DESIGN SPEED: 55 MPH
ADT: 2,700 (2006) 3,250 (2026)
PV: 90.0%
SU: 5.5%
MU: 4.5%

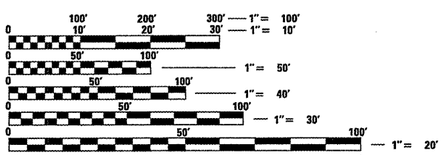


FULL SIZE PLANS HAVE BEEN PREPARED USING STANDARD ENGINEERING SCALES. REDUCED SIZED PLANS WILL NOT CONFORM TO STANDARD SCALES. IN MAKING MEASUREMENTS ON REDUCED PLANS, THE ABOVE SCALES MAY BE USED.

J.U.L.I.E.
JOINT UTILITY LOCATION INFORMATION FOR EXCAVATION
1-800-892-0123 EAST BEND TWP
OR 811 CONDIT TWP

PROJECT ENGINEER: JASON W. STULTS
SQUAD LEADER: RUSTIN KEYS 217-465-4181

CONTRACT NO. 70427

HURST-ROSCHE ENGINEERS, INC.
HILLSBORO, ILLINOIS 62049
(217)532-3959 FAX (217)532-3212

HR HURST-ROSCHE ENGINEERS, INC.

MARK A. REITZ
062-047531
REGISTERED PROFESSIONAL ENGINEER OF ILLINOIS
SEAL

12-16-09
MARK A. REITZ P.E.#062-047531 DATE
LICENSE EXPIRES: NOV 30, 2011
HURST-ROSCHE ENGINEERS, INC.

STATE OF ILLINOIS
DEPARTMENT OF TRANSPORTATION
DIVISION OF HIGHWAYS

SUBMITTED 12/17 20 09
Joseph E. Crouser
DEPUTY DIRECTOR OF HIGHWAYS, REGION THREE ENGINEER

January 29, 20 10
Scott E. Stitt, P.E.
Acting ENGINEER OF DESIGN AND ENVIRONMENT

January 29, 20 10
Christine M. Reed
DIRECTOR OF HIGHWAYS, CHIEF ENGINEER

PRINTED BY THE AUTHORITY OF THE STATE OF ILLINOIS

...\DGN\D570427-sht-Cover.dgn 12/16/2009 7:38:42 AM

## GENERAL NOTES

G.N.-100
ENGLISH UNITS OF MEASUREMENT SHALL GOVERN OVER AND SUPERSEDE ANY METRIC UNITS SHOWN IN THIS CONTRACT. WHERE INCLUDED, METRIC UNITS ARE FOR INFORMATION ONLY.

G.N.-105.09A
ALL ELEVATIONS SHOWN IN THE PLANS ARE BASED ON NORTH AMERICAN VERTICAL DATUM OF 1988. (NAVD 88)

G.N.-107.31
UTILITY LINES WERE PLOTTED FROM INFORMATION FURNISHED BY THE VARIOUS UTILITY COMPANIES INVOLVED (QUALITY LEVEL C &/OR QUALITY LEVEL D) AND THE ACCURACY SHOULD BE CONSIDERED APPROXIMATE ONLY.
UTLILITY COMPANIES MAY BE ADJUSTING THEIR FACILITIES DURING CONSTRUCTION. THE CONTRACTOR SHALL COOPERATE WITH THESE ORGANIZATIONS WHILE THESE ADJUSTMENTS ARE BEING PREFORMED.
J.U.L.I.E. - JOINT UTILITY LOCATION INFORMATION FOR EXCAVATORS SYSTEM
(800)892-0123.

G.N.-250C (SPL)
SPECIAL TEMPORARY EROSION CONTROL SEEDING IS INCLUDED IN THIS CONTRACT TO SEED NEW EARTH SHOULDERS DURING TIME PERIODS WHEN PERMANENT SEEDING IS NOT ALLOWED. SOME OR ALL OF THE TEMPORARY EROSION CONTROL SEEDING WILL BE DELETED IF IT IS POSSIBLE TO PLACE PERMANENT SEEDING ON EARTH SHOULDERS AT THE TIME OF THEIR COMPLETION.

G.N.-406
THE QUANTITIES INCLUDED IN THE PLANS FOR HOT- MIX ASPHALT RESURFACING ARE INTENDED TO GIVE THE COVERAGE SHOWN ON THE TYPICAL CROSS SECTIONS. IT IS NOT INTENDED TO INCREASE THE THICKNESS OF THE HOT-MIX ASPHALT MIXTURE IN ORDER TO USE ALL OF THE QUANTITIES INCLUDED IN THE CONTRACT.

G.N.-406.05B
ALL LEVELING BINDER OR BINDER SHALL BE GIVEN A FOG COAT OF PRIME BEFORE THE SURFACE COURSE IS PLACED WHEN DIRECTED BY THE ENGINEER.

THE FOG COAT WILL BE PAID FOR AT THE CONTRACT UNIT PRICE PER GALLON FOR BITUMINOUS MATERIAL (PRIME COAT) AND NO ADDITIONAL COMPENSATION WILL BE ALLOWED.

G.N.-406H

| MIXTURE USE | SURFACE COURSE, SHOULDER, LEVEL BINDER, FLEXIBLE CONNECTOR | BASE COURSE OPTION (HMA) |
|---|---|---|
| AC/PG | PG 64-22 | PG 64-22 |
| RAP%(MAX) | 15% | 25% |
| DESIGN AIR VOIDS | 4.0% @ N DESIGN =50 | 4.0% @ N DESIGN =50 |
| MIX COMPOSITION (GRADIATION MIXTURE) | IL 9.5 | IL 19.0 |
| FRICTION AGG | MIXTURE C | N/A |

G.N.-631
IF THE CONTRACTOR ELECTS TO USE THE ALTERNATE MOUNTING METHOD OF THRU DRILLING THE MOUNTING HOLES FOR THE TRAFFIC BARRIER TERMINALS, TYPE 6, THE HOLES SHALL BE DRILLED USING A CORE DRILL. A HAMMER DRILL WILL NOT BE ALLOWED.

G.N.-703A
SHORT TERM PAVEMENT MARKING SHALL BE APPLIED TO THE PAVEMENT AFTER ANY OF THE FOLLOWING: COLD MILLING AND/OR PLACING BITUMINOUS MATERIALS (PRIME COAT), LEVELING BINDER (MACHINE METHOD), BINDER AND SURFACE COURSES. SHORT TERM PAVEMENT MARKING PLACED ON THE SURFACE, SHALL COINCIDE WITH THE FINAL PAVEMENT STRIPING. SHORT TERM PAVEMENT MARKING PLACED PRIOR TO THE SURFACE SHALL COINCIDE WITH THE EXISTING PAVEMENT MARKINGS. USE 4 FEET PER 40 FEET (OR 10% PER STATION).

G.N.-781
RAISED REFLECTIVE PAVEMENT MARKERS SHALL BE PLACED IN ACCORDANCE WITH STANDARD 781001. AND THE DETAILS SHOWN IN THE PLANS. IF THERE IS ANY DISCREPANCY BETWEEN THE STANDARD AND THE DETAILS IN THE PLANS, THE DETAILS IN THE PLANS SHALL GOVERN. THE FINAL PAVEMENT MARKINGS SHALL BE IN PLACE PRIOR TO PLACING THE RAISED REFLECTIVE PAVEMENT MARKERS AND THE RAISED REFLECTIVE PAVEMENT MARKERS SHALL BE PLACED MIDWAY IN THE 30 FOOT (9 m) SPACE BETWEEN THE DASHED CENTERLINE STRIPES (WHEN APPLICABLE).

G.N.-1004.01
COARSE AGGREGATE GRADATION CA-10 MAY BE USED WHENEVER COARSE AGGREGATE CA-6 IS SPECIFIED IN THE STANDARD SPECIFICATIONS.

G.N.-Z0038
AN ALUMINUM TABLET OF THE TYPE SHOWN ON STANDARD 667101 SHALL BE PLACED ON THE PROPOSED STRUCTURE AS DIRECTED BY THE ENGINEER. THE BENCH MARK ELEVATION WILL BE ESTABLISHED AND MARKED BY THE DEPARTMENT. THIS WORK WILL BE PAID FOR AT THE CONTRACT UNIT PRICE EACH FOR PERMANENT BENCH MARKS.

## STANDARDS

| | |
|---|---|
| 000001-05 | STANDARD SYMBOLS, ABBREVIATIONS AND PATTERNS |
| 001001-02 | AREA OF REINFORCEMENT BARS |
| 001006 | DECIMAL OF AN INCH AND A FOOT |
| 280001-05 | TEMPORARY EROSION CONTROL SYSTEMS |
| 420401-08 | BRIDGE APPROACH PAVEMENT CONNECTOR |
| 482011-03 | HMA SHOULDER STRIPS/SHOULDERS WITH RESURFACING OR WIDENING AND RESURFACING PROJECTS |
| 515001-03 | NAME PLATE FOR BRIDGES |
| 630001-08 | STEEL PLATE BEAM GUARDRAIL |
| 630301-05 | SHOULDER WIDENING FOR TYPE 1 (SPECIAL) GUARDRAIL TERMINALS |
| 631031-08 | TRAFFIC BARRIER TERMINAL, TYPE 6 |
| 635006-03 | REFLECTOR AND TERMINAL MARKER PLACEMENT |
| 635011-02 | REFLECTOR MARKER AND MOUNTING DETAILS |
| 667101-01 | PERMANENT SURVEY MARKERS |
| 701201-03 | LANE CLOSURE, 2L, 2W. DAY ONLY |
| 701311-03 | LANE CLOSURE, 2L, 2W. MOVING OPERATIONS-DAY ONLY |
| 701321-10 | LANE CLOSURE, 2L, 2W. BRIDGE REPAIR WITH BARRIER |
| 701901-01 | TRAFFIC CONTROL DEVICES |
| 704001-06 | TEMPORARY CONCRETE BARRIER |
| 780001-02 | TYPICAL PAVEMENT MARKINGS |
| 781001-03 | TYPICAL APPLICATION RAISED REFLECTIVE PAVEMENT MARKERS |
| 601101-01 | CONCRETE HEADWALL FOR PIPE DRAIN |
| 701301-03 | |

## RATES OF APPLICATION

THE FOLLOWING FACTORS WERE USED FOR ESTIMATING PLAN QUANTITIES AND SHALL NOT BE USED FOR THE BASIS OF FINAL QUANTITIES.

| | | |
|---|---|---|
| HOT - MIX ASPHALT LEVEL BINDER | 0.056 | TON/SQ YD/IN |
| HOT - MIX ASPHALT SURFACE COURSE | 0.056 | TON/SQ YD/IN |
| AGGREGATE (SURFACE, BASE AND BACK FILL) | 1.80 | TON/CU YD |
| PRIME COAT FOR HOT - MIX ASPHALT: | | |
| ON PAVEMENT | 0.08 | GALLONS/SQ YD |
| FOG COAT ON NEW BINDER | 0.05 | GALLONS/SQ YD |
| AGGREGATE (PRIME COAT): | | |
| ON EXISTING PAVEMENT | 0.002 | TON/SQ YD |
| FOG COAT ON NEW BINDER | 0.001 | TON/SQ YD |

## SHEET INDEX


| | |
|---|---|
| 1 | COVER SHEET |
| 2 | INDEX, HWY STDS., GENERAL NOTES |
| 3–4 | SUMMARY OF QUANTITIES |
| 5 | EXIST. & PROP. TYPICAL SECTIONS (ROADWAY) |
| 6–7 | SCHEDULES |
| 8 | ALIGNMENT, TIES AND BENCHMARKS |
| 9 | PLAN AND PROFILE SHEET |
| 10–11 | STAGE CONSTRUCTION SHEETS |
| 12 | EROSION CONTROL SHEET |
| 13–36 | STRUCTURAL SHEETS |
| 37–44 | DETAILS |
| 45 | GENERAL PLAN AND ELEVATION FROM 2007 AS-BUILT PLANS |
| 46–55 | CROSS SECTIONS |


## COMMITMENTS: NONE


HURST-ROSCHE ENGINEERS, INC.
HILLSBORO, ILLINOIS 62049
(217)532-3959 FAX (217)532-3212

## SUMMARY OF QUANTITIES

RURAL TWO-LANE ROADWAY 80% FEDERAL 20% STATE

| CODE NO. | | ITEM | UNIT | TOTAL | X071-2A |
|---|---|---|---|---|---|
| 20200100 | | EARTH EXCAVATION | CU YD | 5 | 5 |
| 20300100 | | CHANNEL EXCAVATION | CU YD | 2010 | 2010 |
| 20400800 | | FURNISHED EXCAVATION | CU YD | 50 | 50 |
| 20700400 | | POROUS GRANULAR EMBANKMENT, SPECIAL | CU YD | 105 | 105 |
| 25000210 | • | SEEDING, CLASS 2A | ACRE | 0.25 | 0.25 |
| 25000300 | • | SEEDING, CLASS 3 | ACRE | 0.25 | 0.25 |
| 25000400 | • | NITROGEN FERTILIZER NUTRIENT | POUND | 45 | 45 |
| 25000500 | • | PHOSPHORUS FERTILIZER NUTRIENT | POUND | 45 | 45 |
| 25000600 | • | POTASSIUM FERTILIZER NUTRIENT | POUND | 45 | 45 |
| 25100115 | | MULCH, METHOD 2 | ACRE | 0.25 | 0.25 |
| 25100630 | | EROSION CONTROL BLANKET | SQ YD | 443 | 443 |
| 28000250 | | TEMPORARY EROSION CONTROL SEEDING | POUND | 100 | 100 |
| 28000400 | | PERIMETER EROSION BARRIER | FOOT | 928 | 928 |
| 28100107 | | STONE RIPRAP, CLASS A4 | SQ YD | 1311 | 1311 |
| 28200200 | | FILTER FABRIC | SQ YD | 1311 | 1311 |
| 40600100 | | BITUMINOUS MATERIALS (PRIME COAT) | GALLON | 73 | 73 |
| 40600300 | | AGGREGATE (PRIME COAT) | TON | 2 | 2 |
| 40600625 | | LEVELING BINDER (MACHINE METHOD), N50 | TON | 57 | 57 |
| 40600982 | | HOT-MIX ASPHALT SURFACE REMOVAL - BUTT JOINT | SQ YD | 111 | 111 |
| 40600990 | | TEMPORARY RAMP | SQ YD | 86 | 86 |
| 40603310 | | HOT-MIX ASPHALT SURFACE COURSE, MIX "C", N50 | TON | 47 | 47 |
| 42001430 | | BRIDGE APPROACH PAVEMENT CONNECTOR (FLEXIBLE) | SQ YD | 43 | 43 |
| 44000100 | | PAVEMENT REMOVAL | SQ YD | 324 | 324 |
| 44000700 | | APPROACH SLAB REMOVAL | SQ YD | 106 | 106 |
| 44004250 | | PAVED SHOULDER REMOVAL | SQ YD | 186 | 186 |
| 48203100 | | HOT-MIX ASPHALT SHOULDERS | TON | 25 | 25 |
| 50100100 | | REMOVAL OF EXISTING STRUCTURES | EACH | 1 | 1 |
| 50200100 | | STRUCTURE EXCAVATION | CU YD | 386 | 386 |
| 50300100 | | FLOOR DRAINS | EACH | 4 | 4 |
| 50300225 | | CONCRETE STRUCTURES | CU YD | 281.9 | 281.9 |
| 50300255 | | CONCRETE SUPERSTRUCTURE | CU YD | 218.5 | 218.5 |
| 50300260 | | BRIDGE DECK GROOVING | SQ YD | 654 | 654 |
| 50300280 | | CONCRETE ENCASEMENT | CU YD | 10.9 | 10.9 |
| 50300300 | | PROTECTIVE COAT | SQ YD | 849 | 849 |
| 50500105 | | FURNISHING AND ERECTING STRUCTURAL STEEL | L SUM | 1 | 1 |
| 50500505 | | STUD SHEAR CONNECTORS | EACH | 2070 | 2070 |
| 50800205 | | REINFORCEMENT BARS, EPOXY COATED | POUND | 91260 | 91260 |

• - SPECIALTY ITEM

## SUMMARY OF QUANTITIES

RURAL TWO-LANE ROADWAY 80% FEDERAL 20% STATE

| CODE NO. | | ITEM | UNIT | TOTAL | X071-2A |
|---|---|---|---|---|---|
| 50800515 | | BAR SPLICERS | EACH | 813 | 813 |
| 51200957 | | FURNISHING METAL SHELL PILES 12" X0.250" | FOOT | 528 | 528 |
| 51200959 | | FURNISHING METAL SHELL PILES 14" X0.312" | FOOT | 432 | 432 |
| 51202305 | | DRIVING PILES | FOOT | 960 | 960 |
| 51203200 | | TEST PILE METAL SHELLS | EACH | 2 | 2 |
| 51204650 | | PILE SHOES | EACH | 40 | 40 |
| 51205200 | | TEMPORARY SHEET PILING | SQ FT | 2817 | 2817 |
| 51500100 | | NAME PLATES | EACH | 1 | 1 |
| 52000110 | | PREFORMED JOINT STRIP SEAL | FOOT | 97 | 97 |
| 52100010 | | ELASTOMERIC BEARING ASSEMBLY, TYPE I | EACH | 12 | 12 |
| 52100520 | | ANCHOR BOLTS, 1" | EACH | 24 | 24 |
| 52100540 | | ANCHOR BOLTS, 1 1/2" | EACH | 24 | 24 |
| 58700300 | | CONCRETE SEALER | SQ FT | 967 | 967 |
| 59100100 | | GEOCOMPOSITE WALL DRAIN | SQ YD | 61 | 61 |
| 60109580 | • | PIPE UNDERDRAINS FOR STRUCTURES 4" | FOOT | 104 | 104 |
| 63000001 | • | STEEL PLATE BEAM GUARD RAIL, TYPE A, 6 FOOT POSTS | FOOT | 450 | 450 |
| 63100085 | • | TRAFFIC BARRIER TERMINAL, TYPE 6 | EACH | 4 | 4 |
| 63100167 | • | TRAFFIC BARRIER TERMINAL, TYPE 1 (SPECIAL) TANGENT | EACH | 4 | 4 |
| 63200310 | | GUARDRAIL REMOVAL | FOOT | 400 | 400 |
| 67000500 | | ENGINEER'S FIELD OFFICE, TYPE B | CAL MO | 7 | 7 |
| 67100100 | | MOBILIZATION | L SUM | 1 | 1 |
| 70100405 | | TRAFFIC CONTROL AND PROTECTION, STANDARD 701321 | EACH | 1 | 1 |
| 70100450 | | TRAFFIC CONTROL AND PROTECTION, STANDARD 701201 | L SUM | 1 | 1 |
| 70106500 | | TEMPORARY BRIDGE TRAFFIC SIGNALS | EACH | 1 | 1 |
| 70300100 | | SHORT-TERM PAVEMENT MARKING | FOOT | 80 | 80 |
| 70300220 | | TEMPORARY PAVEMENT MARKING - LINE 4" | FOOT | 900 | 900 |
| 70301000 | | WORK ZONE PAVEMENT MARKING REMOVAL | SQ FT | 1150 | 1150 |
| 70400100 | | TEMPORARY CONCRETE BARRIER | FOOT | 525.0 | 525.0 |
| 70400200 | | RELOCATE TEMPORARY CONCRETE BARRIER | FOOT | 425.0 | 425.0 |
| 78001110 | • | PAINT PAVEMENT MARKING - LINE 4" | FOOT | 900 | 900 |
| 78100100 | • | RAISED REFLECTIVE PAVEMENT MARKER | EACH | 3 | 3 |
| 78100105 | • | RAISED REFLECTIVE PAVEMENT MARKER (BRIDGE) | EACH | 2 | 2 |
| 78200405 | • | GUARDRAIL MARKERS | EACH | 8 | 8 |
| 78200500 | • | BARRIER WALL MARKERS | EACH | 4 | 4 |
| 78201000 | | TERMINAL MARKER - DIRECT APPLIED | EACH | 4 | 4 |
| 78300100 | | PAVEMENT MARKING REMOVAL | SQ FT | 300 | 300 |

• - SPECIALTY ITEM

HR HURST-ROSCHE ENGINEERS, INC.
HURST-ROSCHE ENGINEERS, INC.
HILLSBORO, ILLINOIS 62049
(217)532-3959 FAX (217)532-3212

# SUMMARY OF QUANTITIES

RURAL TWO-LANE ROADWAY
80% FEDERAL
20% STATE

| CODE NO. | | ITEM | UNIT | TOTAL | X071-2A |
|---|---|---|---|---|---|
| 78300200 | | RAISED REFLECTIVE PAVEMENT MARKER REMOVAL | EACH | 5 | 5 |
| X0324865 | | DIAMOND GRINDING (BRIDGE SECTION) | SQ YD | 643 | 643 |
| X5020501 | | UNDERWATER STRUCTURE EXCAVATION PROTECTION-LOCATION 1 | EACH | 1 | 1 |
| X5020502 | | UNDERWATER STRUCTURE EXCAVATION PROTECTION-LOCATION 2 | EACH | 1 | 1 |
| X5080600 | | MECHANICAL SPLICERS | EACH | 72 | 72 |
| X7200201 | | WIDTH RESTRICTION SIGNING | L SUM | 1 | 1 |
| Z0001900 | | ASBESTOS BEARING PAD REMOVAL | EACH | 60 | 60 |
| Z0002900 | | BASE COURSE (OPTION) | SQ YD | 173 | 173 |
| Z0013798 | * | CONSTRUCTION LAYOUT | L SUM | 1 | 1 |
| Z0030250 | | IMPACT ATTENUATORS, TEMPORARY (NON-REDIRECTIVE), TEST LEVEL 3 | EACH | 2 | 2 |
| Z0030350 | | IMPACT ATTENUATORS, RELOCATE (NON-REDIRECTIVE), TEST LEVEL 3 | EACH | 2 | 2 |
| Z0038700 | | PERMANENT BENCH MARKS | EACH | 1 | 1 |

* - SPECIALTY ITEM

HURST-ROSCHE ENGINEERS, INC.
HILLSBORO, ILLINOIS 62049
(217)532-3959 FAX (217)532-3212
HR HURST - ROSCHE ENGINEERS, INC.

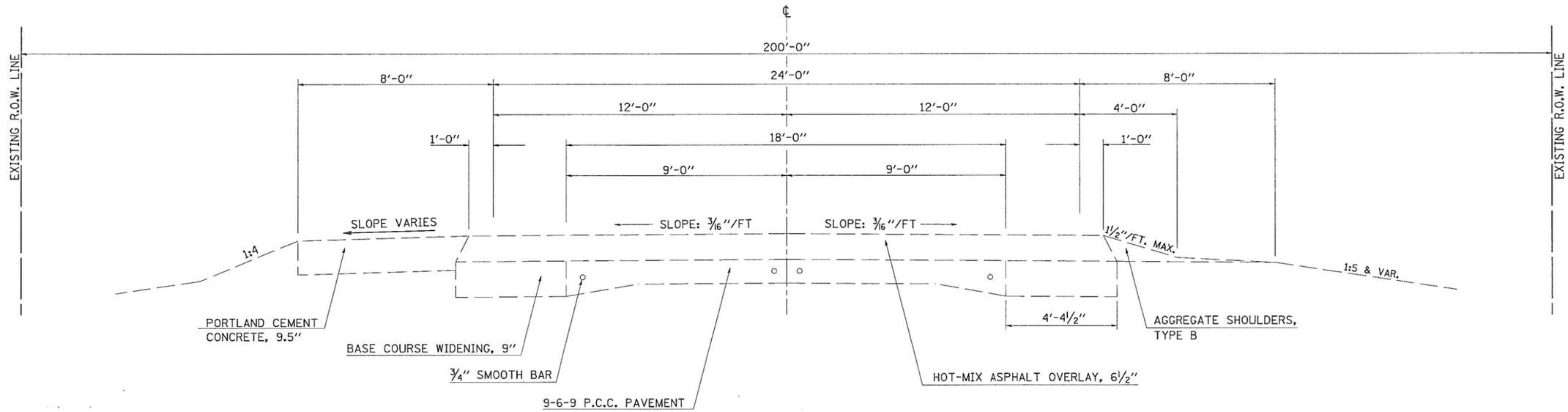


## EXISTING TYPICAL CROSS SECTION

STA. 1891+00.00 TO STA. 1892+45.85
STA. 1893+85.45 TO STA. 1895+00.00

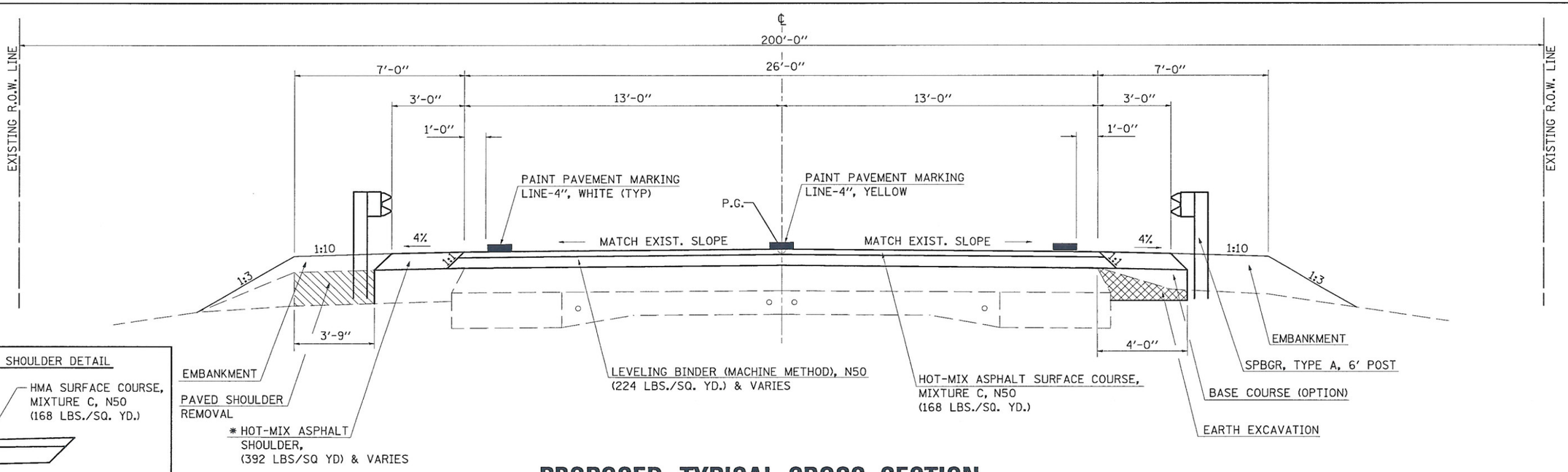


## PROPOSED TYPICAL CROSS SECTION

STA. 1891+00.00 TO STA. 1892+12.32
STA. 1894+18.98 TO STA. 1895+00.00

HURST-ROSCHE ENGINEERS, INC.
HILLSBORO, ILLINOIS 62049
(217)532-3959 FAX (217)532-3212
HR HURST-ROSCHE ENGINEERS, INC.

| | | | |
|---|---|---|---|
| FILE NAME = t:\190-1239_wo*1_wildcat\dgn\D570427-sht-typical.dgn | USER NAME = HURST-ROSCHE | DESIGNED - JJC | REVISED - |
| | | DRAWN - UJ | REVISED - |
| | PLOT SCALE = 40.0001 ' / IN. | CHECKED - MAR | REVISED - |
| | PLOT DATE = 12/16/2009 | DATE - 12-16-09 | REVISED - |

STATE OF ILLINOIS
DEPARTMENT OF TRANSPORTATION

EXISTING & PROPOSED TYPICAL CROSS SECTIONS (ROADWAY)

SCALE: N/A | SHEET NO. OF SHEETS | STA. TO STA.

| F.A.P RTE. | SECTION | COUNTY | TOTAL SHEETS | SHEET NO. |
|---|---|---|---|---|
| 709 | (105BR)BR | CHAMPAIGN | 55 | 5 |

CONTRACT NO. 70427

FED. ROAD DIST. NO. 5 | ILLINOIS | FED. AID PROJECT

...\dgn\D570427-sht-typical.dgn 12/16/2009 7:38:51 AM

# SCHEDULES

## EARTHWORK SCHEDULE

| Location From | Location To | Earth Excavation | Excavation to be used in Embankment* | Embankment | Earthwork Balance** |
|---|---|---|---|---|---|
| | | Cubic Yard | Cubic Yard | Cubic Yard | Cubic Yard |
| *US 136* | | | | | |
| 1891+00.00 | 1892+19.95 | 2.1 | 1.6 | 35.1 | -33.6 |
| 1894+10.89 | 1895+00.00 | 1.0 | 0.8 | 18.8 | -18.0 |
| | TOTAL | 3 | 2 | 54 | -52 |
| | *USE* | *5* | | *USE* | *50* |

* Adjusted for Shrinkage (25% Shrinkage

** Waste (+) or Shortage (-)

## SEEDING, CLASS 2A

*US 136*

| Station | | Station | Side | ACRE |
|---|---|---|---|---|
| 1889+00.00 | to | 1892+50.32 | Rt | 0.05 |
| 1891+00.00 | to | 1892+50.32 | Lt | 0.05 |
| 1893+80.93 | to | 1895+00.00 | Rt | 0.04 |
| 1894+16.10 | to | 1897+34.25 | Lt | 0.04 |
| | | | *Round to the nearest 0.25* | |
| | | | Total | 0.25 |

## SEEDING, CLASS 3

Wildcat Slough

| | | | | |
|---|---|---|---|---|
| 19+25.00 | to | 20+75.00 | Lt | 0.11 |
| 19+25.00 | to | 20+75.00 | Rt | 0.13 |
| | | | *Round to the nearest 0.25* | |
| | | | Total | 0.25 |

## MULCH, METHOD 2

*US 136*

| Station | | Station | Side | ACRE |
|---|---|---|---|---|
| 1889+00.00 | to | 1892+50.32 | Rt | 0.03 |
| 1891+00.00 | to | 1892+50.32 | Lt | 0.05 |
| 1894+16.10 | to | 1897+34.25 | Lt | 0.04 |
| | | | *Round to the nearest 0.25* | |
| | | | Total | 0.25 |

## EROSION CONTROL BLANKET

*US 136*

| Station | | Station | Side | SQ YD |
|---|---|---|---|---|
| 1891+00.00 | to | 1892+45.11 | Rt | 99.7 |
| 1892+50.00 | to | 1892+72.26 | Lt | 10.3 |
| 1892+65.52 | to | 1895+00.00 | Rt | 233.8 |
| 1893+00.00 | to | 1893+46.72 | Lt | 75.8 |
| 1893+94.35 | to | 1894+15.20 | Lt | 23.4 |
| | | | Total | 443 |

## PERIMETER EROSION BARRIER

*US 136*

| Station | | Station | Side | FOOT |
|---|---|---|---|---|
| 1888+97.05 | to | 1892+10.00 | Rt | 313.0 |
| 1891+00.00 | to | 1892+68.00 | Lt | 168.0 |
| 1893+67.00 | to | 1895+00.00 | Rt | 133.0 |
| 1894+20.00 | to | 1897+34.25 | Lt | 314.3 |
| | | | Total | 928 |

## BITUMINOUS MATERIALS (PRIME COAT)

*US 136*

| Station | | Station | 1st App .08 gal/sq yd | 2nd App .05 gal/sq yd | GALLON |
|---|---|---|---|---|---|
| 1891+00.00 | to | 1892+18.32 | 26.0 | 16.2 | 42.2 |
| 1894+12.98 | to | 1895+00.00 | 18.7 | 11.7 | 30.4 |
| | | | | Total | 73 |

## TRAFFIC BARRIER TERMINAL, TYPE 6

*US 136*

| Station | | Station | Side | EACH |
|---|---|---|---|---|
| 1891+72.05 | to | 1892+15.20 | Rt | 1 |
| 1892+07.22 | to | 1892+50.37 | Lt | 1 |
| 1893+80.93 | to | 1894+24.08 | Rt | 1 |
| 1894+16.10 | to | 1894+59.25 | Lt | 1 |
| | | | Total | 4 |

## AGGREGATE (PRIME COAT)

*US 136*

| Station | | Station | 1st App 0.002 ton/sq yd | 2nd App 0.001 ton/sq yd | TON |
|---|---|---|---|---|---|
| 1891+00.00 | to | 1892+18.32 | 0.65 | 0.32 | 1.0 |
| 1894+12.98 | to | 1895+00.00 | 0.47 | 0.23 | 0.7 |
| | | | | Total | 2 |

## LEVELING BINDER (MACHINE METHOD), N50

*US 136* 224lbs/sq yd

| Station | | Station | TON |
|---|---|---|---|
| 1891+25.06 | to | 1892+12.32 | 35.2 |
| 1894+18.98 | to | 1894+74.00 | 22.2 |
| | | Total | 57 |

## HOT-MIX ASPHALT SURFACE REMOVAL - BUTT JOINT

*US 136*

| Station | | Station | SQ YD |
|---|---|---|---|
| 1891+00.00 | to | 1891+15.06 | 53.2 |
| 1894+84.38 | to | 1895+00.00 | 58.1 |
| | | Total | 111 |

## HOT-MIX ASPHALT SURFACE COURSE, MIX "C", N50

*US 136* 168lbs/sq yd

| Station | | Station | TON |
|---|---|---|---|
| 1891+00.00 | to | 1892+12.32 | 27.3 |
| 1894+18.98 | to | 1895+00.00 | 19.7 |
| | | Total | 47 |

## BRIDGE APPROACH PAVEMENT CONNECTOR (FLEXIBLE)

*US 136*

| Station | | Station | SQ YD |
|---|---|---|---|
| 1892+12.32 | to | 1892+18.32 | 21.3 |
| 1894+12.98 | to | 1894+18.98 | 21.3 |
| | | Total | 43 |

## APPROACH SLAB REMOVAL

*US 136*

| Station | | Station | SQ YD |
|---|---|---|---|
| 1892+69.74 | to | 1892+87.11 | 51.7 |
| 1893+45.00 | to | 1893+63.53 | 54.7 |
| | | Total | 106 |

## PAVED SHOULDER REMOVAL

*US 136*

| Station | | Station | Side | SQ YD |
|---|---|---|---|---|
| 1891+25.00 | to | 1893+05.19 | Lt | 100.65 |
| 1893+56.33 | to | 1895+10.00 | Lt | 84.91 |
| 1891+96.33 | to | 1892+75.55 | Rt | 23.86 |
| 1893+29.86 | to | 1894+05.96 | Rt | 24.07 |
| | | | Total | 233 |

## HOT-MIX ASPHALT SHOULDERS

*US 136* 392lbs/sq yd

| Station | | Station | Side | TON |
|---|---|---|---|---|
| 1891+00.00 | to | 1892+28.33 | Lt | 8.3 |
| 1891+00.00 | to | 1891+99.33 | Rt | 6.4 |
| 1894+02.96 | to | 1895+00.00 | Rt | 6.2 |
| 1894+31.96 | to | 1895+00.00 | Lt | 4.3 |
| | | | Total | 25 |

## STEEL PLATE BEAM GUARD RAIL, TYPE A, 6 FOOT POSTS

*US 136*

| Station | | Station | Side | FOOT |
|---|---|---|---|---|
| 1889+47.05 | to | 1891+72.05 | Rt | 225 |
| 1894+59.25 | to | 1896+84.25 | Lt | 225 |
| | | | Total | 450 |

## TRAFFIC BARRIER TERMINAL, TYPE 1 (SPECIAL) TANGENT

*US 136*

| Station | | Station | Side | EACH |
|---|---|---|---|---|
| 1888+97.05 | to | 1889+47.05 | Rt | 1 |
| 1891+57.22 | to | 1892+07.22 | Lt | 1 |
| 1894+24.08 | to | 1894+74.08 | Rt | 1 |
| 1896+84.25 | to | 1897+34.25 | Lt | 1 |
| | | | Total | 4 |

## GUARDRAIL REMOVAL

*US 136*

| Station | | Station | Side | FOOT |
|---|---|---|---|---|
| 1891+65.50 | to | 1892+66.76 | Rt | 100.0 |
| 1892+07.31 | to | 1893+08.49 | Lt | 100.0 |
| 1893+22.76 | to | 1894+24.03 | Rt | 100.0 |
| 1893+64.54 | to | 1894+65.83 | Lt | 100.0 |
| | | | Total | 400 |

## TRAFFIC CONTROL AND PROTECTION, STANDARD 701321

*US 136*

| | EACH |
|---|---|
| US 136 LOCATION | 1 |
| Total | 1 |

## TEMPORARY BRIDGE TRAFFIC SIGNALS

*US 136*

| Station | | Station | EACH |
|---|---|---|---|
| 1889+59.26 | & | 1889+84.26 | 1 |
| 1896+65.15 | & | 1896+90.15 | |
| | | Total | 1 |

## SHORT-TERM PAVEMENT MARKING

*US 136*

| Station | | Station | Applications | FOOT |
|---|---|---|---|---|
| 1891+00.00 | to | 1895+00.00 | 2 | 80 |
| | | | Total | 80 |

## TEMPORARY PAVEMENT MARKING - LINE 4"

*US 136*

| Station | | Station | | FOOT |
|---|---|---|---|---|
| 1891+00.00 | to | 1895+00.00 | CL | 100 |
| 1891+00.00 | to | 1895+00.00 | Rt | 400 |
| 1891+00.00 | to | 1895+00.00 | Lt | 400 |
| | | | Total | 900 |

## WORK ZONE PAVEMENT MARKING REMOVAL

*US 136*

| Station | | Station | | SQ FT |
|---|---|---|---|---|
| 1891+00.00 | to | 1895+00.00 | Temp Pave Markings | 299.7 |
| 1891+00.00 | to | 1895+00.00 | Short Term Markings | 26.6 |
| 1889+69.26 | to | 1897+30.15 | Stage 1 | 253.4 |
| 1891+00.00 | to | 1895+45.00 | Stage 1 | 148.2 |
| 1889+21.62 | to | 1896+34.08 | Stage 2 | 237.2 |
| 1891+08.54 | to | 1895+07.60 | Stage 2 | 132.9 |
| 1889+09.26 | | | Stage 2 | 26.0 |
| 1897+40.15 | | | Stage 2 | 26.0 |
| | | | Total | 1150 |

## TEMPORARY CONCRETE BARRIER

*US 136*

| Station | | Station | FOOT |
|---|---|---|---|
| 1890+84.96 | to | 1895+59.96 | 475.0 |
| Additional Barrier for Storage/Staging Area | | | 50.0 |
| | | Total | 525.0 |

## RELOCATE TEMPORARY CONCRETE BARRIER

*US 136*

| Station | | Station | FOOT |
|---|---|---|---|
| 1890+93.96 | to | 1895+18.96 | 425.0 |
| | | Total | 425.0 |

## PAINT PAVEMENT MARKING - LINE 4"

*US 136*

| Station | | Station | | FOOT |
|---|---|---|---|---|
| 1891+00.00 | to | 1895+00.00 | CL | 100 |
| 1891+00.00 | to | 1895+00.00 | Rt | 400 |
| 1891+00.00 | to | 1895+00.00 | Lt | 400 |
| | | | Total | 900 |

## RAISED REFLECTIVE PAVEMENT MARKER

*US 136*

| Station | | Station | EACH |
|---|---|---|---|
| 1891+00.00 | to | 1892+48.32 | 2 |
| 1893+83.69 | to | 1895+00.00 | 1 |
| | | Total | 3 |

## RAISED REFLECTIVE PAVEMENT MARKER (BRIDGE)

*US 136*

| Station | | Station | EACH |
|---|---|---|---|
| 1892+48.32 | to | 1893+83.69 | 2 |
| | | Total | 2 |

## TERMINAL MARKER - DIRECT APPLIED

*US 136*

| Station | Side | EACH |
|---|---|---|
| 1888+97.05 | Rt | 1 |
| 1891+57.22 | Lt | 1 |
| 1894+74.08 | Rt | 1 |
| 1897+34.25 | Lt | 1 |
| | Total | 4 |

HURST-ROSCHE ENGINEERS, INC.
HILLSBORO, ILLINOIS 62049
(217)532-3959 FAX (217)532-3212

# SCHEDULES

| PAVEMENT MARKING REMOVAL | | | |
|---|---|---|---|
| *US 136* | | | |
| Station | | Station | SQ FT |
| 1891+00.00 | to | 1895+00.00 | 300 |
| | | Total | 300 |

| RAISED REFLECTIVE PAVEMENT MARKER REMOVAL | | | |
|---|---|---|---|
| *US 136* | | | |
| Station | | Station | EACH |
| 1891+00.00 | to | 1895+00.00 | 5 |
| | | Total | 5 |

| BASE COURSE (OPTION) | | | | | |
|---|---|---|---|---|---|
| *US 136* | | | | | |
| Station | | Station | Side | Width (ft) | SQ YD |
| 1891+00.00 | to | 1892+75.05 | Rt | 4 | 77.8 |
| 1893+31.58 | to | 1895+45.00 | Rt | 4 | 94.9 |
| | | | | Total | 173 |

| IMPACT ATTENUATORS, TEMPORARY (NON-REDIRECTIVE), TEST LEVEL 3 | | |
|---|---|---|
| *US 136* | | |
| Station | Side | EACH |
| 1890+84.96 | Lt | 1 |
| 1895+59.96 | Lt | 1 |
| | Total | 2 |

| IMPACT ATTENUATORS, RELOCATE (NON-REDIRECTIVE), TEST LEVEL 3 | | |
|---|---|---|
| *US 136* | | |
| Station | Side | EACH |
| 1890+93.96 | Rt | 1 |
| 1895+18.96 | Rt | 1 |
| | Total | 2 |

| CHANNEL EXCAVATION | | | |
|---|---|---|---|
| Wildcat Slough | | | CU YD |
| Station | | Station | |
| 19+00.00 | to | 21+00.00 | 2010.0 |
| | | Total | 2010 |

| PAVEMENT REMOVAL | | | |
|---|---|---|---|
| *US 136* | | | |
| Station | | Station | SQ YD |
| 1892+12.32 | to | 1892+69.75 | 164.9 |
| 1893+63.54 | to | 1894+18.98 | 159.1 |
| | | Total | 324 |

| GUARDRAIL & BARRIER WALL MARKER SCHEDULE | | | | |
|---|---|---|---|---|
| ROUTE | US 136 | | US 136 | |
| LOCATION | EB RT SHOULDER | | WB RT SHOULDER | |
| SPACING* | 150′ | | 150′ | |
| NUMBER | STA | TYPE | STA | TYPE |
| 1 | 1888+97.05 | GRS | 1897+34.25 | GRS |
| 2 | 1889+77.05 | GRS | 1896+54.25 | GRS |
| 3 | 1890+57.05 | GRS | 1895+74.25 | GRS |
| 4 | 1891+37.05 | GRS | 1894+94.25 | GRS |
| 5 | 1892+17.05 | BWS | 1894+14.25 | BWS |
| 6 | 1893+67.05 | BWS | 1892+64.25 | BWS |
| TOTAL GR | 4 | S | 4 | S |
| TOTAL BW | 2 | S | 2 | S |

* AFTER INITIAL 320′ FROM STD 635001 & STD 635006

LEGEND

| | |
|---|---|
| GR | GUARDRAIL MARKER |
| BW | BARRIER WALL MARKER |
| S | SILVER COLOR |

| TEMPORARY RAMP | |
|---|---|
| *US 136* | |
| Station | SQ YD |
| 1891+00.00 | 17.8 |
| 1892+18.32 | 25.0 |
| 1894+12.98 | 25.0 |
| 1895+00.00 | 17.8 |
| Total | 86 |

HURST-ROSCHE ENGINEERS, INC.
HILLSBORO, ILLINOIS 62049
(217)532-3959 FAX (217)532-3212

HR HURST - ROSCHE ENGINEERS, INC.

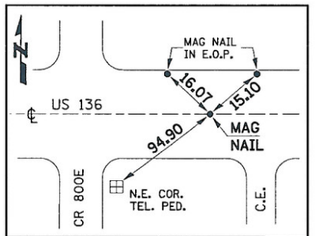


**P.O.T. STA. 1874 + 01.37**

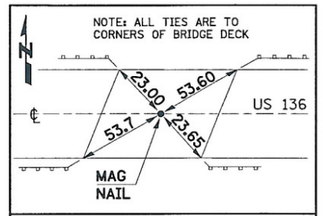


**P.O.T. STA. 1893 + 15.65 (US 136)**
**= STA. 20 + 00.00 (STREAM)**

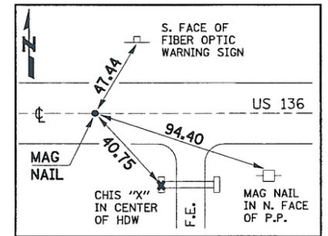


**P.I. KINK STA. 1898 + 81.26**

BM #4801-02
CHISELED SQUARE IN THE CENTER OF THE WEST
HDW OF A PIPE CULVERT UNDER FIELD ENTRANCE
STA 1885+89.00 30' RT ELEV = 711.805

BM #4801-01
CHISELED SQUARE ON TOP OF THE SW
WINGWALL OF STRUCTURE NO. 010-0062
STA 1892+67.00 26' RT ELEV = 717.211

BM #4752-5
CHISELED SQUARE IN THE CENTER OF
THE WEST HDW OF THE EAST F.E.
STA 1899+05.24, 29.9' LT. ELEV = 711.940

HURST-ROSCHE ENGINEERS, INC.
HILLSBORO, ILLINOIS 62049
(217)532-3959 FAX (217)532-3212

HR HURST-ROSCHE ENGINEERS, INC.

| | | | | |
|---|---|---|---|---|
| FILE NAME = t:\190-1239_wo#1_wildcat\dgn\D570427-sht-ATB.dgn | USER NAME = HURST-ROSCHE | DESIGNED - JJC | REVISED - | STATE OF ILLINOIS DEPARTMENT OF TRANSPORTATION |
| | | DRAWN - TWC | REVISED - | |
| | PLOT SCALE = 40.0001 ' / IN. | CHECKED - MAR | REVISED - | |
| | PLOT DATE = 12/16/2009 | DATE - 12-16-09 | REVISED - | |

**ALIGNMENT, TIES & BENCHMARK**

SCALE: NONE | SHEET NO. 1 OF 1 SHEETS | STA. TO STA.

| F.A.P RTE. | SECTION | COUNTY | TOTAL SHEETS | SHEET NO. |
|---|---|---|---|---|
| 709 | (105BR)BR | CHAMPAIGN | 55 | 8 |

CONTRACT NO. 70427

FED. ROAD DIST. NO. 5 | ILLINOIS | FED. AID PROJECT

...\dgn\D570427-sht-ATB.dgn 12/16/2009 7:38:52 AM

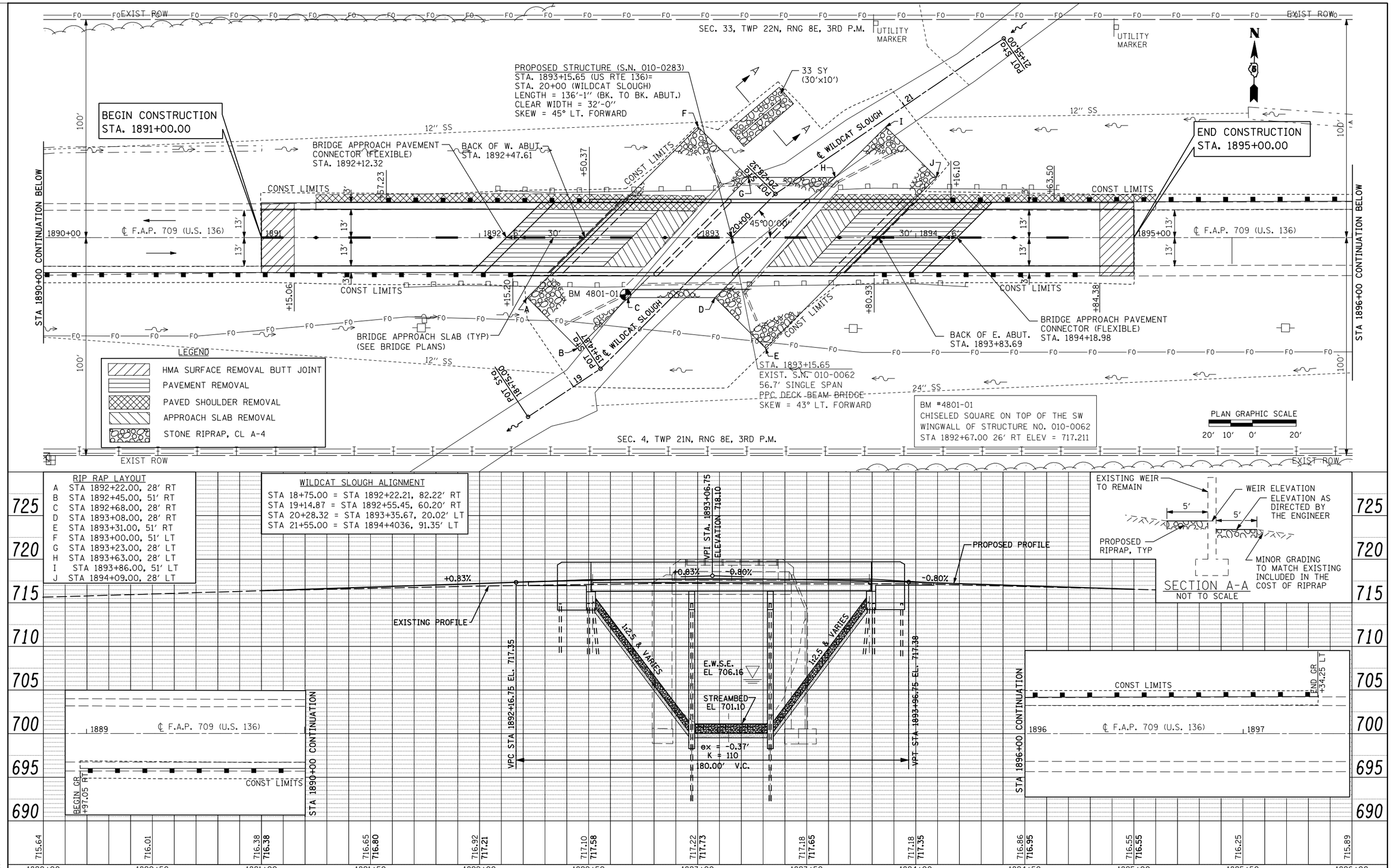


| PLAN | DATE | BY |
|---|---|---|
| SURVEYED | | |
| PLOTTED | | |
| ALIGNMENT CHECKED | | |
| RT. OF WAY CHECKED | | |
| CADD FILE NAME | | |
| NOTE BOOK NO. | | |

| PROFILE | DATE | BY |
|---|---|---|
| SURVEYED | | |
| PLOTTED | | |
| GRADES CHECKED | | |
| BLDG NOTED | | |
| STRUCTURE NOTAT'NS CHKD | | |
| NOTE BOOK NO. | | |

HURST-ROSCHE ENGINEERS, INC.
HILLSBORO, ILLINOIS 62049
(217)532-3959 FAX (217)532-3212

HURST-ROSCHE ENGINEERS, INC.

| | | | |
|---|---|---|---|
| FILE NAME = c:\pw_work\pwidot\keysrb\d0142584\D570427-sht-PLNPRF.dgn | USER NAME = keysrb | DESIGNED - JJC | REVISED - |
| | | DRAWN - TWC | REVISED - |
| | PLOT SCALE = 40.0000 ' / IN. | CHECKED - MAR | REVISED - |
| | PLOT DATE = 12/17/2009 | DATE - 12-16-09 | REVISED - |

**STATE OF ILLINOIS**
**DEPARTMENT OF TRANSPORTATION**

**PLAN AND PROFILE**

SCALE: 1"=20' H. | SHEET NO. 1 OF SHEETS | STA. 1891+00 TO STA. 1895+00

| F.A.P RTE. | SECTION | COUNTY | TOTAL SHEETS | SHEET NO. |
|---|---|---|---|---|
| 709 | (105BR)BR | CHAMPAIGN | 55 | 9 |

CONTRACT NO. 70427

FED. ROAD DIST. NO. 5 | ILLINOIS | FED. AID PROJECT

# STAGE 1

## PRIOR TO STAGE 1 CONSTRUCTION

1. PLACE PERIMETER EROSION BARRIER ON DISTURBED SLOPES AS SHOWN ON EROSION CONTROL PLANS.
2. INSTALL PROPOSED BASE COURSE (OPTION) ON THE SOUTH SIDE FROM EDGE OF PAVEMENT TO EXISTING GUARDRAIL, USING TRAFFIC CONTROL STANDARD 701201.

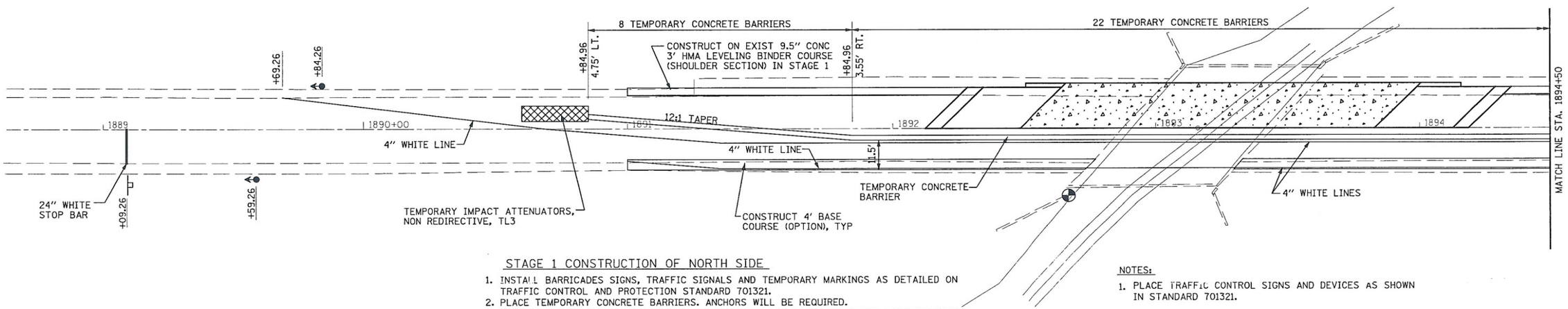


## STAGE 1 CONSTRUCTION OF NORTH SIDE

1. INSTALL BARRICADES SIGNS, TRAFFIC SIGNALS AND TEMPORARY MARKINGS AS DETAILED ON TRAFFIC CONTROL AND PROTECTION STANDARD 701321.
2. PLACE TEMPORARY CONCRETE BARRIERS. ANCHORS WILL BE REQUIRED.
3. EXISTING GUARD RAIL ON SOUTH SIDE TO REMAIN IN PLACE DURING STAGE 1 CONSTRUCTION.
4. INSTALL TEMPORARY SHEET PILING AS SHOWN ON SHEET 13 S.N. 010-0283 STRUCTURAL PLANS.
5. REMOVE GUARDRAIL, APPROACH PAVEMENT AND NORTH SIDE OF EXISTING STRUCTURE. CONSTRUCT PROPOSED STRUCTURE, APPROACH PAVEMENT, APPROACH PAVEMENT CONNECTORS, HMA SHOULDER SECTION, GUARDRAIL AND ALL OTHER COLLATERAL WORK FOR NORTH SIDE OF THE ROADWAY AS SHOWN.

NOTES:

1. PLACE TRAFFIC CONTROL SIGNS AND DEVICES AS SHOWN IN STANDARD 701321.
2. ALL TEMPORARY BRIDGE TRAFFIC SIGNALS FOR STAGE 1 AND STAGE 2 SHALL BE CONSIDERED AS ONE EACH.
3. BARRIER OFFSETS ARE FROM THE CENTER OF THE BARRIER.
4. TEMPORARY PAVEMENT MARKINGS INCLUDED IN COST OF TRAFFIC CONTROL AND PROTECTION 701321.

N

PLAN GRAPHIC SCALE

20' 10' 0' 20'

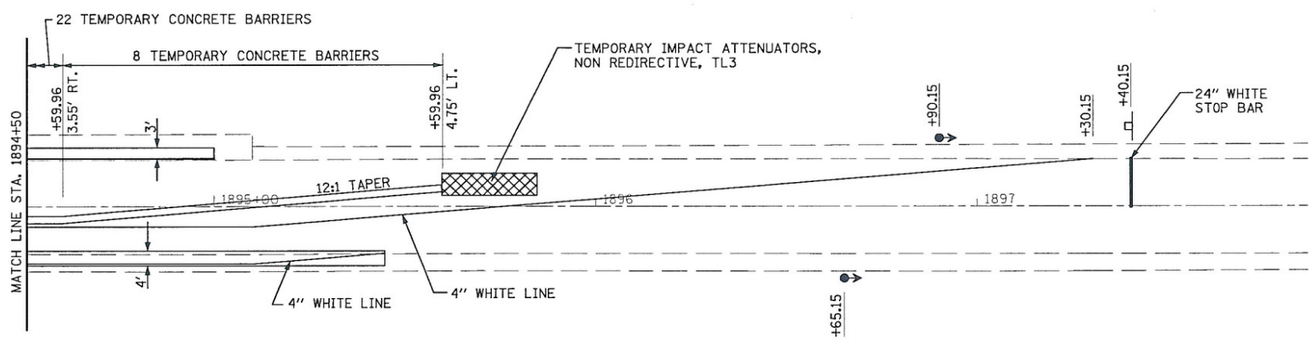


| PLAN | | | |
|---|---|---|---|
| SURVEYED | | | |
| PLOTTED | | | |
| ALIGNMENT CHECKED | | | |
| R.O.W. MARKED | | | |
| NOTE BOOK | | | |
| NO. | | | |

| PROFILE | | | |
|---|---|---|---|
| SURVEYED | | | |
| PLOTTED | | | |
| GRADES CHECKED | | | |
| B.M. NOTED | | | |
| NOTE BOOK | | | |
| NO. | | | |


HURST-ROSCHE ENGINEERS, INC.
HILLSBORO, ILLINOIS 62049
(217)532-3959 FAX (217)532-3212


| | | | |
|---|---|---|---|
| FILE NAME = t:\190-1239_wo*1_wildcat\dgn\D570427-sht-staging_1.dgn | USER NAME = HURST-ROSCHE | DESIGNED - JJC | REVISED - |
| | | DRAWN - TWC | REVISED - |
| | PLOT SCALE = 40.0001 ' / IN. | CHECKED - MAR | REVISED - |
| | PLOT DATE = 12/16/2009 | DATE - 12-16-09 | REVISED - |

**STATE OF ILLINOIS**
**DEPARTMENT OF TRANSPORTATION**

**STAGE 1 CONSTRUCTION PLAN**

SCALE: 1"=20' H. | SHEET NO. 1 OF 2 SHEETS | STA. 1891+00 TO STA. 1895+00

| F.A.P RTE. | SECTION | COUNTY | TOTAL SHEETS | SHEET NO. |
|---|---|---|---|---|
| 709 | (105BR)BR | CHAMPAIGN | 55 | 10 |
| | | CONTRACT NO. 70427 | | |

FED. ROAD DIST. NO. 5 | ILLINOIS | FED. AID PROJECT

...\dgn\D570427-sht-staging_1.dgn 12/16/2009 7:38:55 AM

# STAGE 2

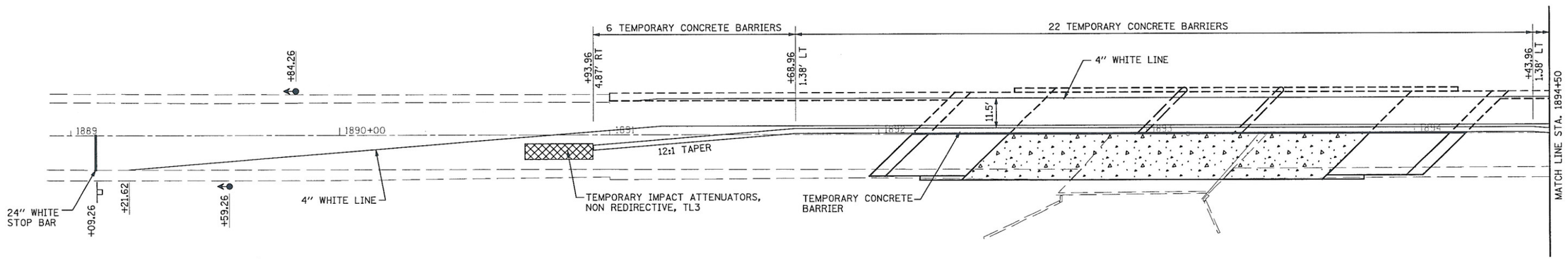


## STAGE 2 CONSTRUCTION OF SOUTH SIDE

1. RELOCATE TEMPORARY CONCRETE BARRIERS, TEMPORARY IMPACT ATTENUATORS AND TEMPORARY MARKINGS AS DETAILED ON TRAFFIC CONTROL AND PROTECTION STANDARD 701321.
2. REMOVE GUARDRAIL, APPROACH PAVEMENT AND REMAINING STRUCTURE FOR SOUTH SIDE AS, INCLUDING SECTIONS OF TEMPORARY SHEET PILING DESIGNATED TO BE REMOVED AFTER STAGE 1 CONSTRUCTION.
3. CONSTRUCT PROPOSED STRUCTURE, APPROACH PAVEMENT, APPROACH PAVEMENT CONNECTORS, GUARDRAIL AND ALL OTHER COLLATERAL WORK FOR SOUTH SIDE OF ROADWAY AS SHOWN.
4. REMOVE TRAFFIC CONTROL PAVEMENT MARKINGS, TEMPORARY CONCRETE BARRIERS AND TEMPORARY SIGNALS. COST IS INCLUDED IN TRAFFIC CONTROL AND PROTECTION STANDARD 701321.
5. MILL AND RESURFACE TO EDGE OF PAVEMENT LEAVING WIDENING FROM STA 1891+00 TO 1895+00. USE TRAFFIC CONTROL AS DETAILED ON STANDARD 701201.
6. PAVEMENT MARKINGS WILL BE PLACED AFTER COMPLETION OF STAGE 2.

NOTES:

1. PLACE TRAFFIC CONTROL SIGNS AND DEVICES AS SHOWN IN STANDARD 701321.
2. ALL TEMPORARY BRIDGE TRAFFIC SIGNALS FOR STAGE 1 AND STAGE 2 SHALL BE CONSIDERED AS ONE EACH.
3. BARRIER OFFSETS ARE FROM THE CENTER OF THE BARRIER.
4. TEMPORARY PAVEMENT MARKINGS INCLUDED IN COST OF TRAFFIC CONTROL AND PROTECTION 701321.

N

PLAN GRAPHIC SCALE

20' 10' 0' 20'

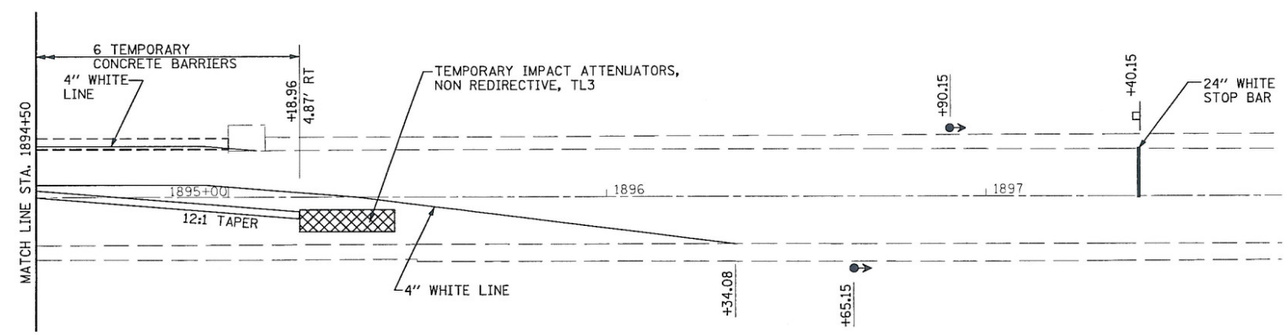


PLAN — SURVEYED ____ PLOTTED ____ ALIGNMENT CHECKED ____ PROF. GRADES CHECKED ____ R.W. CHECKED ____ AND FIELD MARKS ____ NOTE BOOK ____ NO. ____ BY ____ DATE ____

PROFILE — SURVEYED ____ PLOTTED ____ GRADES CHECKED ____ B.M. NOTED ____ STRUCTURE NOTATIONS CHKD ____ NOTE BOOK ____ NO. ____ BY ____ DATE ____

HURST-ROSCHE ENGINEERS, INC.
HILLSBORO, ILLINOIS 62049
(217)532-3959 FAX (217)532-3212
HR HURST-ROSCHE ENGINEERS, INC.

| | | | |
|---|---|---|---|
| FILE NAME = t:\190-1239_wo*1_wildcat\dgn\0570427-sht-staging_2.dgn | USER NAME = HURST-ROSCHE | DESIGNED - JJC | REVISED - |
| | | DRAWN - TWC | REVISED - |
| | PLOT SCALE = 40.0001 ' / IN. | CHECKED - MAR | REVISED - |
| | PLOT DATE = 12/16/2009 | DATE - 12-16-09 | REVISED - |

**STATE OF ILLINOIS**
**DEPARTMENT OF TRANSPORTATION**

**STAGE 2 CONSTRUCTION PLAN**

SCALE: 1"=20' H. | SHEET NO. 2 OF 2 SHEETS | STA. 1891+00 TO STA. 1895+00

| F.A.P RTE. | SECTION | COUNTY | TOTAL SHEETS | SHEET NO. |
|---|---|---|---|---|
| 709 | (105BR)BR | CHAMPAIGN | 55 | 11 |
| | | CONTRACT NO. 70427 | | |

FED. ROAD DIST. NO. 5 | ILLINOIS | FED. AID PROJECT

...\dgn\0570427-sht-staging_2.dgn 12/16/2009 7:38:56 AM

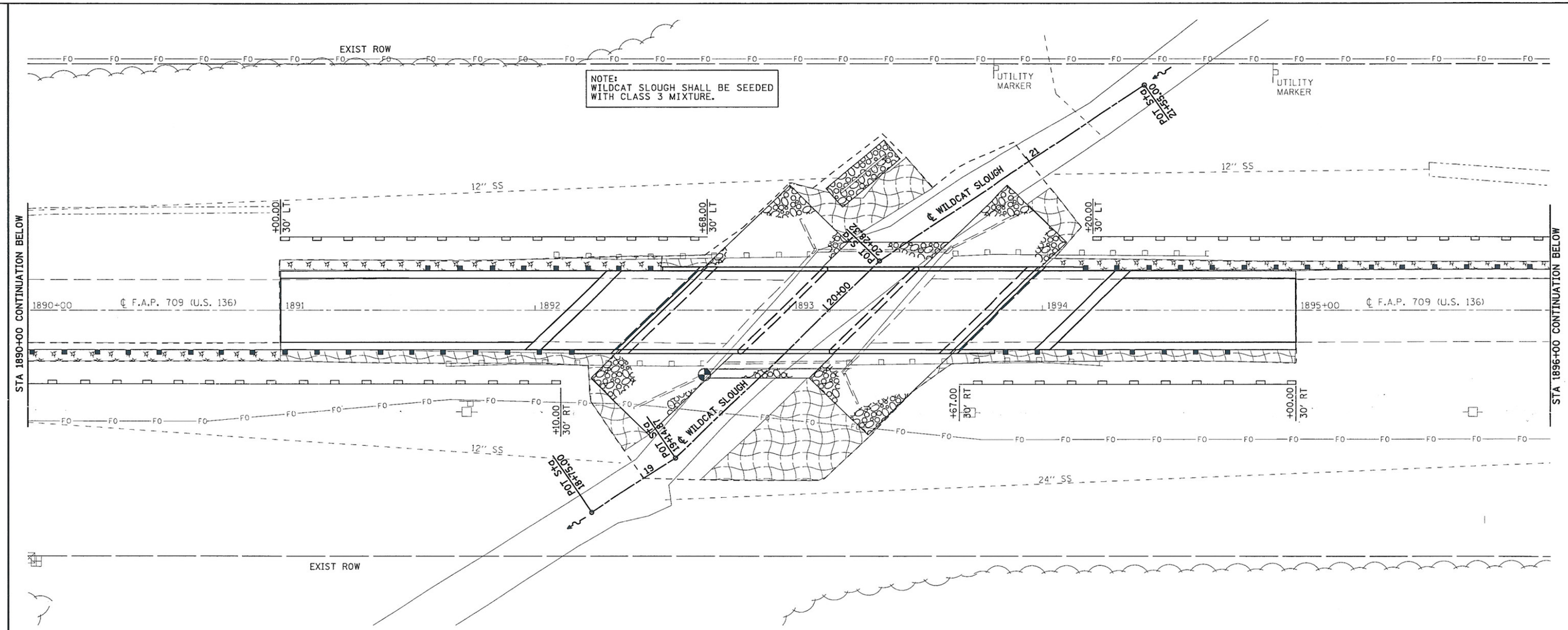


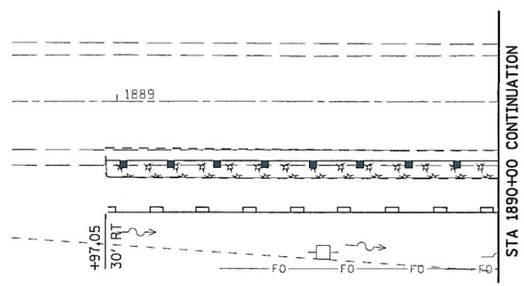


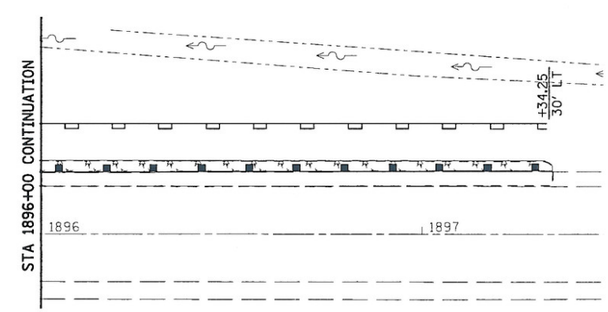


## LEGEND

EROSION CONTROL BLANKET

MULCH METHOD 2 STABILIZED

PERIMETER EROSION BARRIER- SILT FILTER FENCE OR OTHER AS APPROVED BY THE ENGINEER

N

PLAN GRAPHIC SCALE

20' 10' 0' 20'

HURST-ROSCHE ENGINEERS, INC.
HILLSBORO, ILLINOIS 62049
(217)532-3959 FAX (217)532-3212

HR HURST-ROSCHE ENGINEERS, INC.

| | | | |
|---|---|---|---|
| FILE NAME = t:\190-1239_wo*1_wildcat\dgn\D570427-sht-EROS.dgn | USER NAME = HURST-ROSCHE | DESIGNED - JJC | REVISED - |
| | | DRAWN - TWC | REVISED - |
| | PLOT SCALE = 40.0001 ' / IN. | CHECKED - MAR | REVISED - |
| | PLOT DATE = 12/16/2009 | DATE - 12-16-09 | REVISED - |

**STATE OF ILLINOIS**
**DEPARTMENT OF TRANSPORTATION**

**WILDCAT SLOUGH**
**EROSION CONTROL PLAN**

SCALE: 1"=20' | SHEET NO. 1 OF 1 SHEETS | STA. 1891+00 TO STA. 1895+00

| F.A.P RTE. | SECTION | COUNTY | TOTAL SHEETS | SHEET NO. |
|---|---|---|---|---|
| 709 | (105BR)BR | CHAMPAIGN | 55 | 12 |

CONTRACT NO. 70427

ILLINOIS FED. AID PROJECT

...\dgn\D570427-sht-EROS.dgn 12/16/2009 7:38:57 AM

Bench Mark: 4801-01 Chiseled square on top of the Southwest wingwall of structure number 010-0062. Station 1892+67.00, 26' RT. Elevation = 717.21

Existing Structure: S.N. 010-0062 was built in 1924 as Route 1 & 10, Section 51B-15D at Station 1893+15.65 as a reinforced concrete slab bridge on transverse and thru girders and reinforced concrete closed abutments. In 1972, the structure was reconstructed as FA Route 119 (SB1119), Section 105BR03 at Station 1893+15.65 as a single span precast prestressed concrete deck beam superstructure on widened substructure. In 2008, five (5) PPC deck beams were removed and replaced as FAP 709 (US 136), Section D5 Beam Replacement 2008-1, Contract 70669. The back to back of abutments measurements is 56'-8½", the out to out width is 46'-0" and the bridge roadway width is 42'-6". The structure has a bituminous overlay and a waterproofing membrane. The structure is to be replaced using stage construction.

No Salvage

# STATE OF ILLINOIS
# DEPARTMENT OF TRANSPORTATION

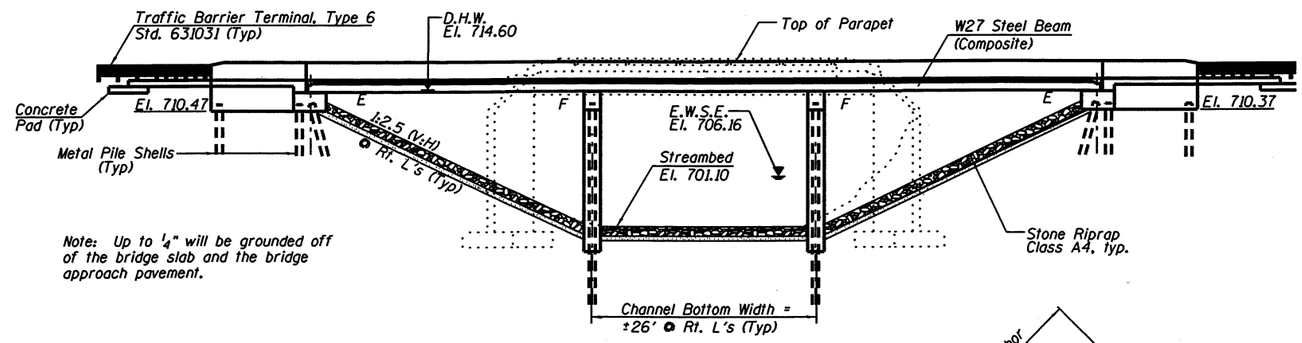


Note: Up to ¼" will be grounded off of the bridge slab and the bridge approach pavement.

## ELEVATION
(Looking North)

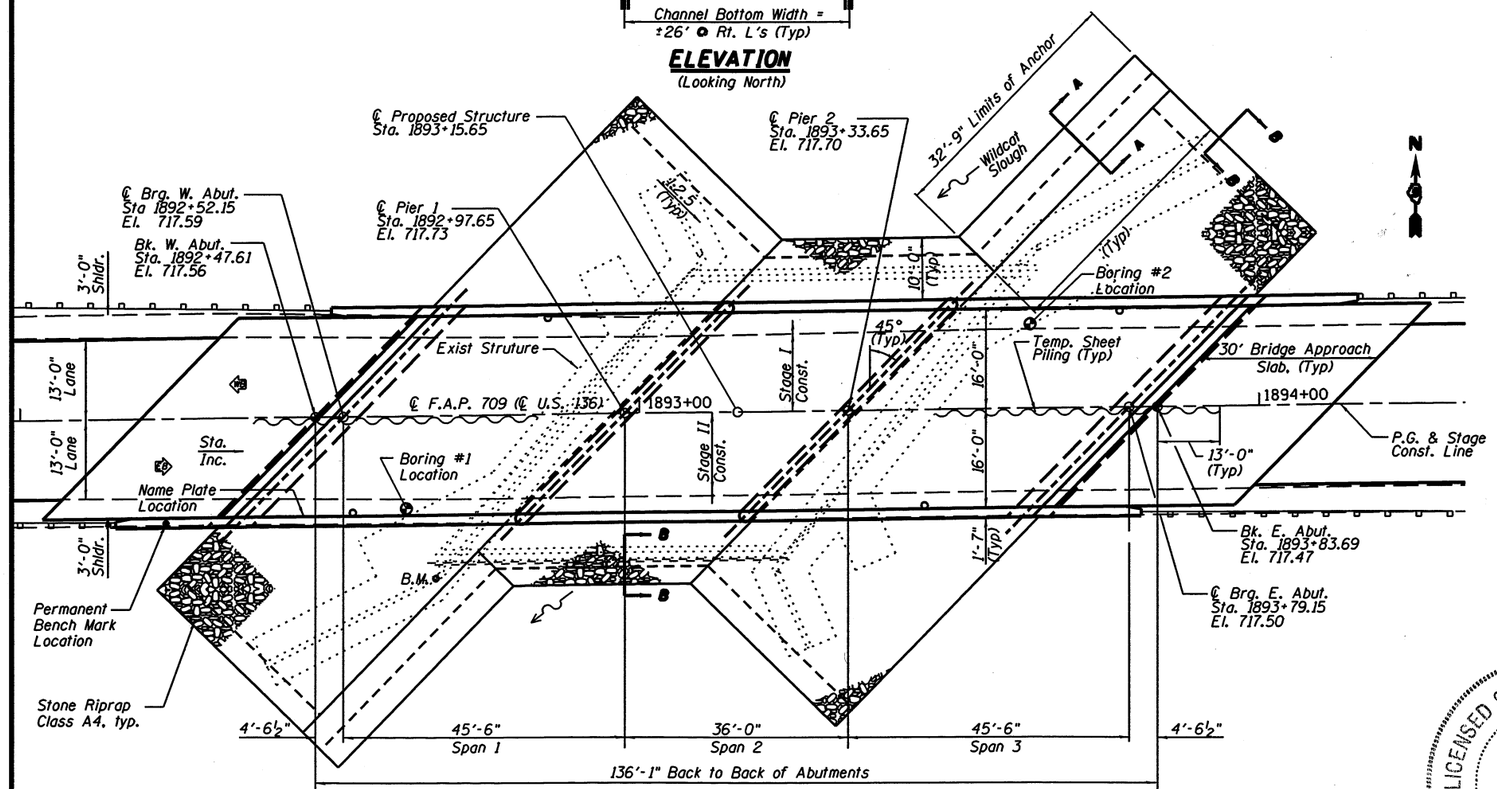


## PLAN

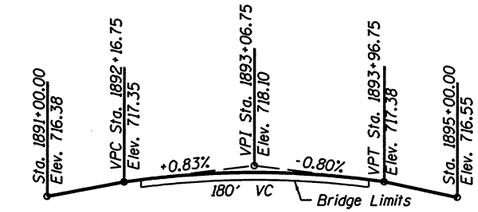


## PROFILE GRADE
(Along ℄ of Rdwy.)

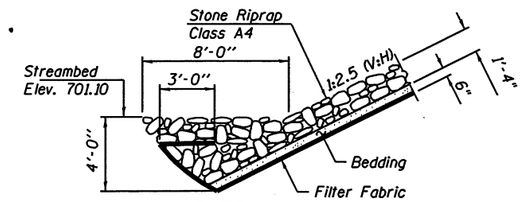


## SECTION A-A
(Anchor Detail)

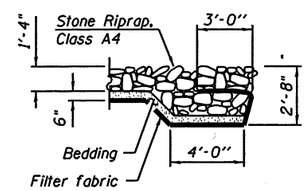


## SECTION B-B

## DESIGN SPECIFICATIONS
2007 AASHTO LRFD Bridge Design Specifications with 2009 Interims

## LOADING HL-93
Allow 50#/sq. ft. for future wearing surface.

## DESIGN STRESSES
### FIELD UNITS
f'c = 3,500 psi
fy = 60,000 psi (Reinforcement)
fy= 36,000 psi (M270 Grade 36)
fy = 50,000 psi (M270 Grade 50)

## SEISMIC DATA
Seismic Performance Zone (SPZ) = 1
Design Spectral Acceleration at 1.0 sec. ($S_{D1}$) = 0.13
Design Spectral Acceleration at 0.2 sec. ($S_{DS}$) = 0.21
Soil Site Class = D

## WATERWAY INFORMATION

Drainage Area = 15.9 sq. mi. Low Grade Elev. 714.49 ft ℄ Sta. 1884+00

| Flood | Freq. Yr. | Q C.F.S. | Opening Sq. Ft. Exist. | Opening Sq. Ft. Prop. | Nat. H.W.E. | Head - Ft. Exist. | Head - Ft. Prop. | Headwater El. Exist. | Headwater El. Prop. |
|---|---|---|---|---|---|---|---|---|---|
| | 10 | 1433 | 442 | 674 | 713.8 | 0.2 | 0.1 | 714.0 | 713.9 |
| Design | 50 | 2282 | 457 | 705 | 714.6 | 0.5 | 0.2 | 715.1 | 714.8 |
| Base | 100 | 2657 | 457 | 705 | 714.9 | 0.5 | 0.2 | 715.4 | 715.1 |
| Overtopping (Ex.) | 15 | 1700 | 457 | --- | 714.1 | 0.5 | --- | 714.6 | ---- |
| Overtopping (Pr.) | 25 | 1912 | --- | 705 | 714.3 | --- | 0.2 | ---- | 714.5 |

## DESIGN SCOUR ELEVATION TABLE

| Design Scour Elevation (ft.) | W. Abut. | Pier 1 | Pier 2 | E. Abut. |
|---|---|---|---|---|
| | 710.25 | 694.1 | 694.1 | 710.25 |

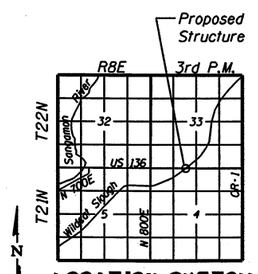


## LOCATION SKETCH

# GENERAL PLAN & ELEVATION
# U.S. ROUTE 136 OVER
# WILDCAT SLOUGH
# F.A.P. RTE. 709 - SEC. (105BR)BR
# CHAMPAIGN COUNTY
# STATION 1893+15.65
# STRUCTURE NO. 010-0283

| | |
|---|---|
| DESIGNED | JLG |
| CHECKED | JSP |
| DRAWN | CJC |
| CHECKED | JLG |

HR
HURST-ROSCHE ENGINEERS, INC.
PROFESSIONAL DESIGN NUMBER: 184-000298

STATION 1893+15.65
BUILT 20_ BY
STATE OF ILLINOIS
F.A.P. RT. 709 SEC. (105BR)BR
LOADING HL-93
STRUCTURE NO. 010-0283

## NAME PLATE
See Std. 515001

LICENSED STRUCTURAL ENGINEER
JOHN S. PERADOTTI
81-005671
JACKSONVILLE
STATE OF ILLINOIS

12/15/09
JOHN S. PERADOTTI. S.E.
ILLINOIS STRUCTURAL NO. 5671
EXPIRES: NOVEMBER 30, 2010

| SHEET NO. 1 | F.A.P. RTE. | SECTION | COUNTY | TOTAL SHEETS | SHEET NO. |
|---|---|---|---|---|---|
| 24 SHEETS | 709 | (105BR)BR | CHAMPAIGN | 55 | 13 |
| | STA 1893+15.60 | | CONTRACT NO. 70427 | | |
| | FED. ROAD DIST. NO. 7 | ILLINOIS | FED. AID PROJECT | | |

## INDEX OF SHEETS


1. General Plan and Elevation
2. General Data
3. Stage Construction Plan
4. Modified Temporary Concrete Barrier for Stage Construction
5. Top of Slab Elevation Plan
6. Top of Slab Elevations
7. Top of West Approach Slab Elevations
8. Top of East Approach Slab Elevations
9. Superstructure Plan
10. Superstructure Details
11. Modified Preformed Joint Strip Seal
12. Bridge Approach Slab Details
13. Bridge Approach Slab Details
14. Framing Plan
15. Structural Steel Details
16. Bearing Details
17. West Abutment
18. East Abutment
19. Abutment Details
20. Pier
21. Metal Shell Pile Details
22. Bar Splicer Assembly Details
23. Cantilever Forming Brackets
24. Subsurface Diagram


STATE OF ILLINOIS
DEPARTMENT OF TRANSPORTATION

## TOTAL BILL OF MATERIAL

| | ITEM | UNIT | SUPER | SUB | TOTAL |
|---|---|---|---|---|---|
| ** | Porous Granular Embankment, Special | Cu. Yd. | - | 105 | 105 |
| | Stone Riprap Class A4 | Sq. Yd. | - | 1278 | 1278 |
| | Filter Fabric | Sq. Yd. | - | 1278 | 1278 |
| | Removal of Existing Structures | Each | 1 | - | 1 |
| | Structure Excavation | Cu. Yd. | - | 386 | 386 |
| | Floor Drains | Each | 4 | - | 4 |
| # | Concrete Structures | Cu. Yd. | - | 281.9 | 281.9 |
| # | Concrete Superstructure | Cu. Yd. | 218.5 | - | 218.5 |
| | Bridge Deck Grooving | Sq. Yd. | 654 | - | 654 |
| | Concrete Encasement | Cu. Yd. | - | 10.9 | 10.9 |
| # | Protective Coat | Sq. Yd. | 849 | - | 849 |
| | Furnishing & Erecting Structural Steel | L. Sum | 1 | - | 1 |
| | Stud Shear Connectors | Each | 2070 | - | 2070 |
| # | Reinforcement Bars, Epoxy Coated | Pounds | 63,080 | 28,180 | 91,260 |
| # | Bar Splicers | Each | 539 | 274 | 813 |
| | Furnishing Metal Shell Piles 12" x .250" | Foot | - | 528 | 528 |
| | Furnishing Metal Shell Piles 14" x .312" | Foot | - | 432 | 432 |
| ** | Driving Piles | Foot | - | 960 | 960 |
| | Test Pile Metal Shells | Each | - | 2 | 2 |
| | Pile Shoes | Each | - | 40 | 40 |
| ** | Temporary Sheet Piling | Sq. Ft. | - | 2817 | 2817 |
| | Name Plates | Each | 1 | - | 1 |
| | Preformed Joint Strip Seal | Foot | 97 | - | 97 |
| | Elastomeric Bearing Assembly, Type I | Each | - | 12 | 12 |
| | Anchor Bolt, 1" | Each | - | 24 | 24 |
| | Anchor Bolt, 1½" | Each | - | 24 | 24 |
| | Concrete Sealer | Sq. Ft. | - | 967 | 967 |
| | Geocomposite Wall Drain | Sq. Yd. | - | 61 | 61 |
| | Pipe Underdrain for Structures 4" | Foot | - | 104 | 104 |
| ** | Mechanical Splicers | Each | - | 72 | 72 |
| #** | Diamond Grinding (Bridge Section) | Sq. Yd. | 643 | - | 643 |
| ** | Underwater Structure Excavation Protection, Location 1 | Each | - | 1 | 1 |
| ** | Underwater Structure Excavation Protection, Location 2 | Each | - | 1 | 1 |
| ** | Asbestos Bearing Pad Removal | Each | 60 | - | 60 |
| | Permanent Bench Marks | Each | 1 | - | 1 |

** See Special Provisions
# Quantity includes Approach Slabs.

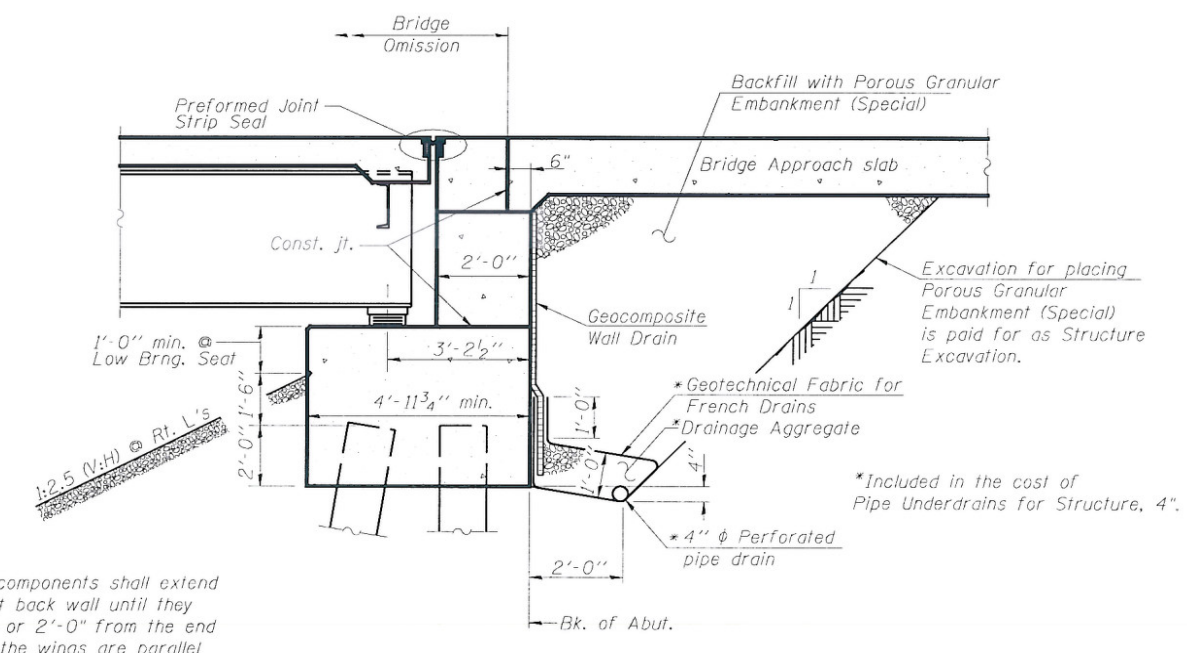


Note:
All drainage system components shall extend parallel to the abutment back wall until they intersect the wingwalls or 2'-0" from the end of the wingwalls when the wings are parallel to the abutment. The pipe shall extend under the wingwall, if necessary, until intersecting the side slopes. The pipes shall drain into concrete headwalls. (See Article 601.05 of the Standard Specifications and Highway Standard 601101).

## SECTION THRU PILE SUPPORTED STUB ABUTMENT

(Horiz. dim. @ Rt. L's)

## GENERAL NOTES

1. Fasteners shall be AASHTO M164 Type 1, mechanically galvanized bolts. Bolts $^{7}/_{8}$ in. ϕ, holes $^{15}/_{16}$ in. ϕ, unless otherwise noted.
2. Calculated weight of Grade 36 Structural Steel = 9,320 lbs
   Calculated weight of Grade 50 Structural Steel = 85,380 lbs
3. No field welding is permitted except as specified in the contract documents.
4. Reinforcement bars shall conform to the requirements of ASTM A 706 Gr 60. See Special Provisions.
5. Reinforcement bars designated (E) shall be epoxy coated.
6. If the Contractor elects to use cantilever forming brackets on the exterior beams or girders, the brackets shall be placed at the same locations as required for the hardwood blocks in Article 503.06(b) of the Standard Specifications. If additional cantilever forming brackets are required, hardwood blocking shall be wedged between the exterior and first interior beam at each of these additional bracket locations.
7. Bearing seat surfaces shall be constructed or adjusted to their designated elevations within a tolerance of $^{1}/_{8}$ inch (0.01 ft.). Adjustment shall be made either by grinding the surface or by shimming the bearings.
8. Concrete sealer shall be applied to the designated areas of the abutments.
9. The Inorganic Zinc Rich Primer / Acrylic / Acrylic Paint System shall be used for shop and field painting of new structural steel except where otherwise noted. The color of the final finish coat for all interior steel surfaces shall be gray, Munsell No. 5B 7/1. The color of the final finish coat for the exterior and bottom flange of the fascia beams shall be interstate green (Munsell color Standard 7.5G 4/8). See Special Provision for "Cleaning and Painting New Metal Structures".
10. Layout of slope protection system may be varied in the field to suit ground conditions as directed by the Engineer.
11. The Contractor shall drive test piles to 110% of the nominal required bearing specified in production locations at substructures specified or approved by the Engineer before ordering the remainder of piles.
12. The concrete for bridge decks finished according to Article 503.16(a) of the Standard Specifications shall be placed and compacted parallel to the skew in uniform increments along centerline of bridge. The machine used for finishing shall be set parallel to the skew for striking off and screeding the concrete.
13. If a portion of the pier wall or concrete encasement is under water, reinforcement may be placed underwater into forms. Concrete shall be tremied according to Article 503.08 of the Standard Specifications to an elevation of 1'-0" above the water line at the time of construction.
14. The contractor is advised that the existing PPC deck beams are in a deteriorated condition with reduced load carrying capacity. It is the contractor's responsibility to account for the conditions of the beams when developing construction procedures for removal and replacement of the superstructure.
15. Slipforming of the parapet is not allowed.
16. Current Ratings on File for Existing Structure
    Inventory: HS 23.3
    Operating: HS 38.9
    Live Load Restrictions: No
17. An aluminum tablet of the type shown on standard 667101 shalbe be placed on the proposed structure as directed by the engineer. The bench mark elevation will be established and marked by the department. This work will be paid for at the contract unit price each for PERMANENT BENCH MARKS.
18. The SSPC QP-1 Contractor Paint Certification will be required for this Contract.

| | |
|---|---|
| DESIGNED | JLG |
| CHECKED | JSP |
| DRAWN | UJ |
| CHECKED | JLG |

HR
HURST-ROSCHE ENGINEERS, INC.
PROFESSIONAL DESIGN NUMBER: 184-000298

## GENERAL DATA
## STRUCTURE NO. 010-0283

| SHEET NO. 2 | F.A.P. RTE. | SECTION | COUNTY | TOTAL SHEETS | SHEET NO. |
|---|---|---|---|---|---|
| 24 SHEETS | 709 | (105BR)BR | CHAMPAIGN | 55 | 14 |
| | SN 010-0283 | | CONTRACT NO. 70427 | | |
| | FED. ROAD DIST. NO. 5 ILLINOIS FED. AID PROJECT | | | | |

D-95-013-97

...\0100283-70427-002-general-notes.dgn 1/19/2010 1:11:36 PM

STATE OF ILLINOIS
DEPARTMENT OF TRANSPORTATION

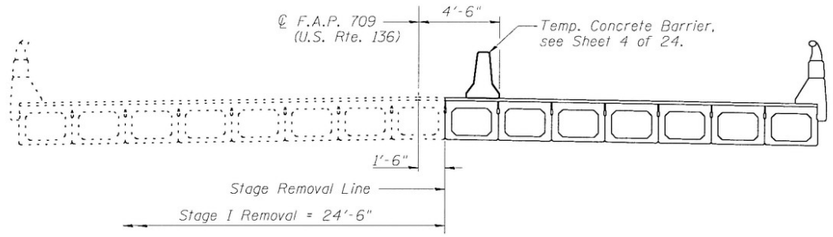


**STAGE I REMOVAL**
(Looking East)

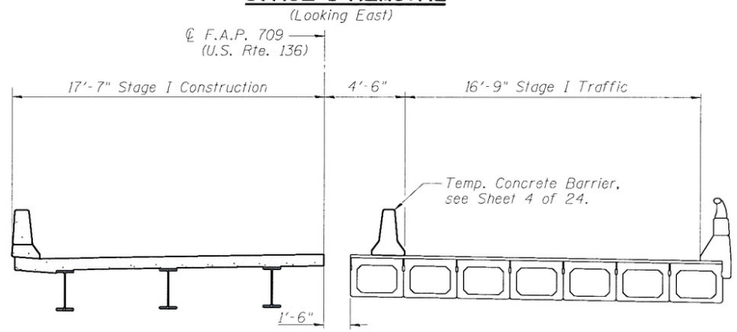


**STAGE I CONSTRUCTION**
(Looking East)

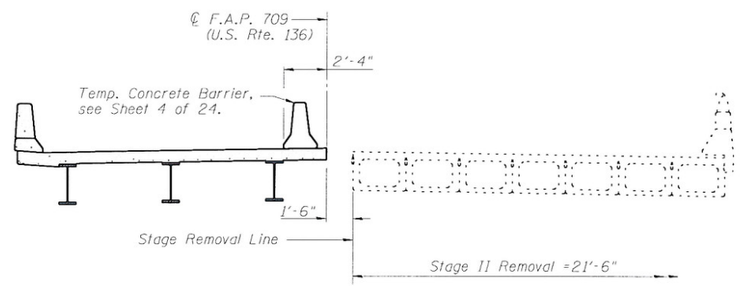


**STAGE II REMOVAL**
(Looking East)

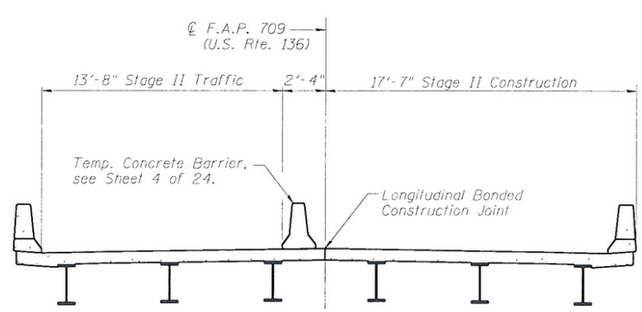


**STAGE II CONSTRUCTION**

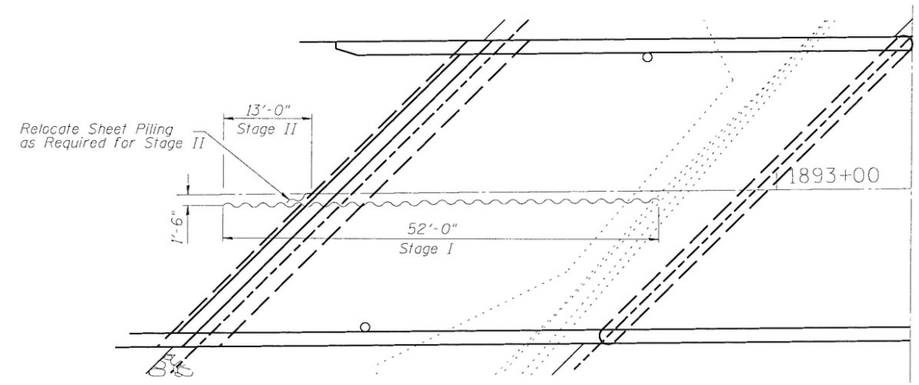


**PLAN**

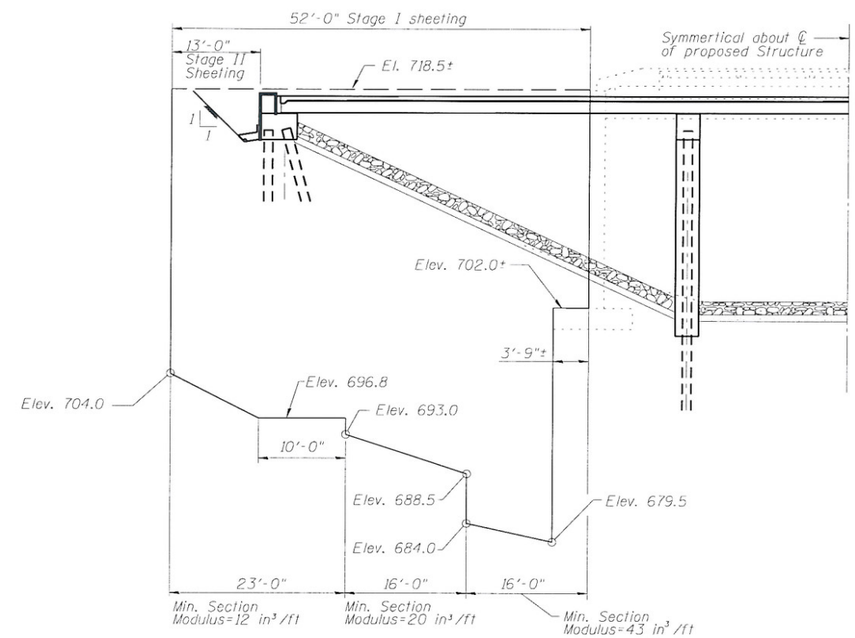


**ELEVATION**

**TEMPORARY SHEET PILING DETAIL ELEVATIONS**
(West approach shown. East approach similar.)
(Looking North)

Notes:
If the Contractor chooses to alter the temporary cantilevered sheet piling design requirements shown on the plans, a design submittal including plan details and calculations will be required for review and acceptance by the Engineer.
The Contractor shall connect the first sheet to the existing abutment wall to ensure stability of sheets driven to the top of the existing footing. This connection shall be reviewed and accepted by the Engineer and included in the cost for Temporary Sheet Piling.

| | |
|---|---|
| DESIGNED | JLG |
| CHECKED | JSP |
| DRAWN | UJ |
| CHECKED | JLG |

HR
HURST-ROSCHE ENGINEERS, INC.
PROFESSIONAL DESIGN NUMBER: 184-000296

**STAGE CONSTRUCTION PLAN**
**STRUCTURE NO. 010-0283**

| SHEET NO. 3 | F.A.P. RTE. | SECTION | COUNTY | TOTAL SHEETS | SHEET NO. |
|---|---|---|---|---|---|
| 24 SHEETS | 709 | (105BR)BR | CHAMPAIGN | 55 | 15 |
| | SN 010-0283 | | CONTRACT NO. 70427 | | |
| | FED. ROAD DIST. NO. 5 ILLINOIS FED. AID PROJECT | | | | |

D-95-013-97

...\0100283-70427-003-stage construction plan.dgn 12/17/2009 1:04:12 PM

STATE OF ILLINOIS
DEPARTMENT OF TRANSPORTATION

When "A" is 3'-6" or less, the temporary concrete barrier shall be anchored to the new slab according to Detail I or Detail II. No anchorage is required when "A" is greater than 3'-6".

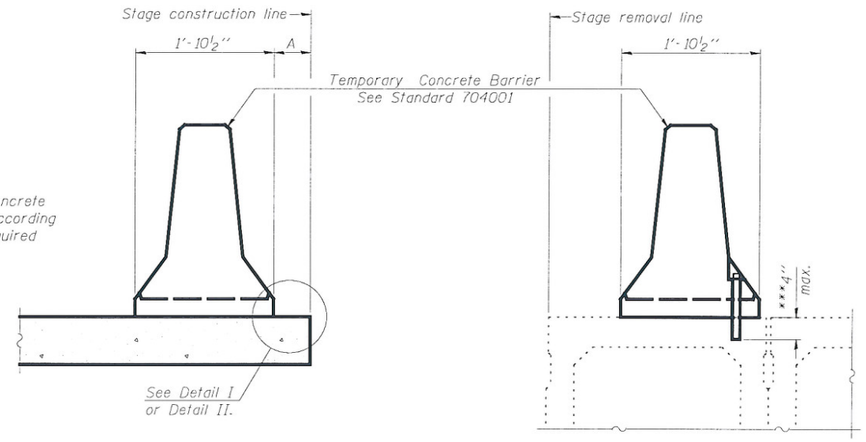


NEW SLAB

EXISTING DECK BEAM

*** If existing deck beam is to remain in place after stage construction, embedment shall only be into wearing surface and not into existing deck beam concrete.

## SECTIONS THRU SLAB OR DECK BEAM

## NOTES

Detail I - With Bar Splicer or Couplers:
Connect one (1) 1"x7½"x10" steel ℙ to the top layer of couplers with 2-⅝" ϕ bolts screwed to coupler at approximate ℄ of each barrier panel.

Detail II - With Extended Reinforcement Bars:
Connect one (1) 1"x7½"x 10" steel ℙ to the concrete slab or concrete wearing surface with 2-⅝" ϕ Expansion Anchors or cast in place inserts spaced between the top layer of reinforcement at approximate ℄ of each barrier panel.

Cost of anchorage is included with Temporary Concrete Barrier.
The 1" x 7½" x 10" plate shall not be removed until stage II construction forms and all reinforcement bars are in place and the concrete is ready to be placed.

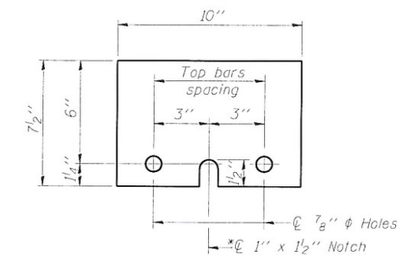


## STEEL RETAINER ℙ 1" x 7½" x 10"

* Required only with Detail II

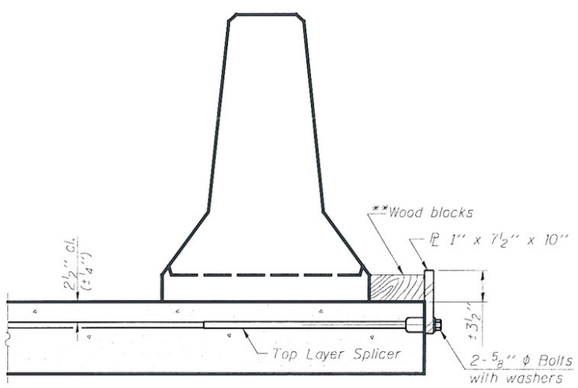


DETAIL I

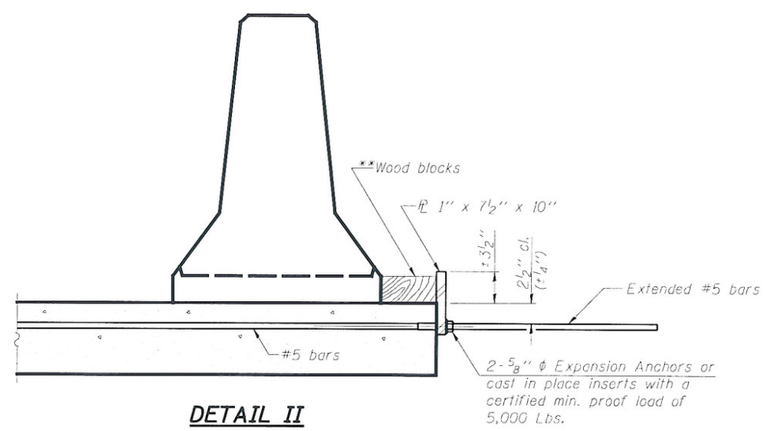


DETAIL II

**Wood blocks may be omitted when required to provide minimum stage traffic lane width. When the wood blocks are omitted, the concrete barrier shall be in direct contact with the steel retainer plate.

| | |
|---|---|
| DESIGNED | JLG |
| CHECKED | CJC |
| DRAWN | UJ |
| CHECKED | JLG |

HR
HURST-ROSCHE ENGINEERS, INC.
PROFESSIONAL DESIGN NUMBER 184-000298

## MODIFIED TEMPORARY CONCRETE BARRIER FOR STAGE CONSTRUCTION STRUCTURE NO. 010-0283

| SHEET NO. 4 | F.A.P. RTE. | SECTION | COUNTY | TOTAL SHEETS | SHEET NO. |
|---|---|---|---|---|---|
| 24 SHEETS | 709 | (105BR)BR | CHAMPAIGN | 55 | 16 |
| | SN 010-0283 | | CONTRACT NO. 70427 | | |
| | FED. ROAD DIST. NO. 5 ILLINOIS FED. AID PROJECT | | | | |

D-95-013-97

...\0100283-70427-004-stage construction details.dgn 12/16/2009 7:37:07 AM

STATE OF ILLINOIS
DEPARTMENT OF TRANSPORTATION

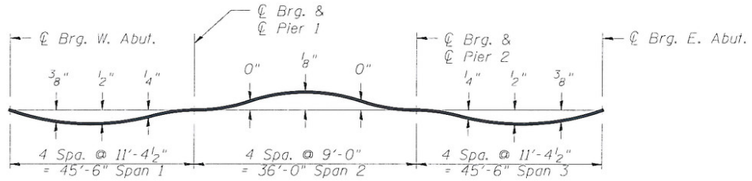


## DEAD LOAD DEFLECTION DIAGRAM

(Includes weight of concrete only.)

Note:
The above deflections are not to be used in the field if the engineer is working from the grade elevations adjusted for dead load deflections and grinding as shown on next sheet.

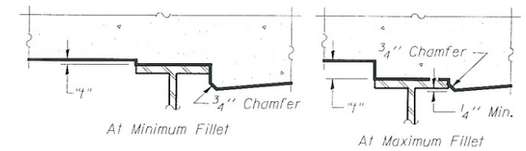


To determine "t": After all structural steel has been erected, elevations of the top flanges of the beams shall be taken at intervals shown on next sheet. These elevations subtracted from the "Theoretical Grade Elevations Adjusted for Dead Load Deflection and Grinding" shown below, minus slab thickness, equals the fillet heights "t" above top flange of beams.

The slab is to be ground after curing to achieve smoothness, but the slab is not to be ground to elevations below the "Theoretical Grade Elevations" shown below. For grinding the deck, see Special Provisions.

## FILLET HEIGHTS

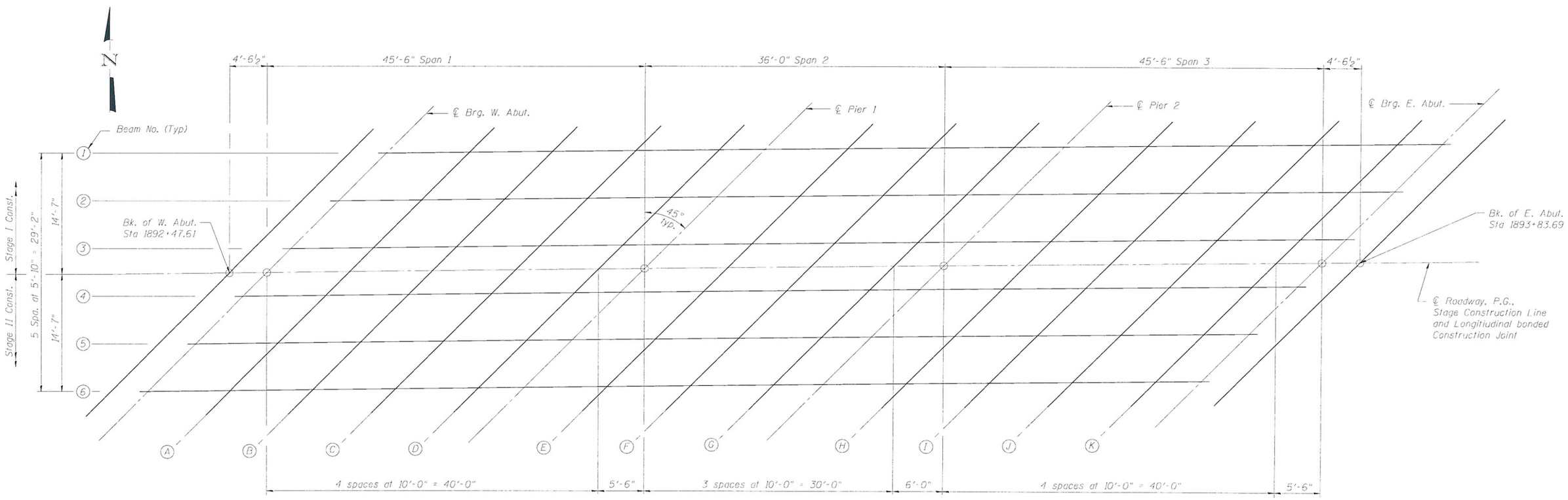


## PLAN

## TOP OF SLAB ELEVATION PLAN
## STRUCTURE NO. 010-0283

| | |
|---|---|
| DESIGNED | JLG |
| CHECKED | CJC |
| DRAWN | UJ |
| CHECKED | JLG |

HR
HURST-ROSCHE ENGINEERS, INC.
PROFESSIONAL DESIGN NUMBER: 184-000298

| SHEET NO. 5 | F.A.P. RTE. | SECTION | COUNTY | TOTAL SHEETS | SHEET NO. |
|---|---|---|---|---|---|
| 24 SHEETS | 709 | (105BR)BR | CHAMPAIGN | 55 | 17 |
| | | SN 010-0283 | CONTRACT NO. 70427 | | |
| | | FED. ROAD DIST. NO. 5 ILLINOIS FED. AID PROJECT | | | |

D-95-013-97

...\0100283-70427-005-top of slab elevations.dgn 12/16/2009 7:37:09 AM

STATE OF ILLINOIS
DEPARTMENT OF TRANSPORTATION

## BEAM #1

| Location | Station | Offset | Theoretical Grade Elevations | Theoretical Grade Elevations Adjusted For Dead Load Deflection and Grinding |
|---|---|---|---|---|
| Bk. W. Abut. | 1892+62.19 | -14.58 | 717.40 | 717.42 |
| ℄ Brg. W. Abut. | 1892+66.73 | -14.58 | 717.42 | 717.44 |
| A | 1892+76.73 | -14.58 | 717.45 | 717.50 |
| B | 1892+86.73 | -14.58 | 717.47 | 717.53 |
| C | 1892+96.73 | -14.58 | 717.49 | 717.54 |
| D | 1893+06.73 | -14.58 | 717.49 | 717.53 |
| ℄ Brg. & ℄ Pier 1 | 1893+12.23 | -14.58 | 717.49 | 717.51 |
| E | 1893+22.23 | -14.58 | 717.49 | 717.50 |
| F | 1893+32.23 | -14.58 | 717.47 | 717.49 |
| G | 1893+42.23 | -14.58 | 717.44 | 717.48 |
| ℄ Brg. & ℄ Pier 2 | 1893+48.23 | -14.58 | 717.42 | 717.48 |
| H | 1893+58.23 | -14.58 | 717.38 | 717.44 |
| I | 1893+68.23 | -14.58 | 717.33 | 717.37 |
| J | 1893+78.23 | -14.58 | 717.27 | 717.29 |
| K | 1893+88.23 | -14.58 | 717.21 | 717.23 |
| ℄ Brg. E. Abut. | 1893+93.73 | -14.58 | 717.16 | 717.19 |
| Bk. E. Abut. | 1893+98.27 | -14.58 | 717.13 | 717.15 |

## BEAM #2

| Location | Station | Offset | Theoretical Grade Elevations | Theoretical Grade Elevations Adjusted For Dead Load Deflection and Grinding |
|---|---|---|---|---|
| Bk. W. Abut. | 1892+56.36 | -8.75 | 717.47 | 717.49 |
| ℄ Brg. W. Abut. | 1892+60.90 | -8.75 | 717.49 | 717.51 |
| A | 1892+70.90 | -8.75 | 717.53 | 717.58 |
| B | 1892+80.90 | -8.75 | 717.56 | 717.62 |
| C | 1892+90.90 | -8.75 | 717.58 | 717.63 |
| D | 1893+00.90 | -8.75 | 717.59 | 717.62 |
| ℄ Brg. & ℄ Pier 1 | 1893+06.40 | -8.75 | 717.59 | 717.61 |
| E | 1893+16.40 | -8.75 | 717.59 | 717.61 |
| F | 1893+26.40 | -8.75 | 717.58 | 717.59 |
| G | 1893+36.40 | -8.75 | 717.56 | 717.58 |
| ℄ Brg. & ℄ Pier 2 | 1893+42.40 | -8.75 | 717.54 | 717.56 |
| H | 1893+52.40 | -8.75 | 717.51 | 717.55 |
| I | 1893+62.40 | -8.75 | 717.46 | 717.52 |
| J | 1893+72.40 | -8.75 | 717.41 | 717.46 |
| K | 1893+82.40 | -8.75 | 717.35 | 717.38 |
| ℄ Brg. E. Abut. | 1893+87.90 | -8.75 | 717.31 | 717.33 |
| Bk. E. Abut. | 1893+92.44 | -8.75 | 717.27 | 717.29 |

## BEAM #3

| Location | Station | Offset | Theoretical Grade Elevations | Theoretical Grade Elevations Adjusted For Dead Load Deflection and Grinding |
|---|---|---|---|---|
| Bk. W. Abut. | 1892+50.53 | -2.92 | 717.53 | 717.55 |
| ℄ Brg. W. Abut. | 1892+55.07 | -2.92 | 717.56 | 717.58 |
| A | 1892+65.07 | -2.92 | 717.60 | 717.65 |
| B | 1892+75.07 | -2.92 | 717.63 | 717.69 |
| C | 1892+85.07 | -2.92 | 717.66 | 717.71 |
| D | 1892+95.07 | -2.92 | 717.68 | 717.71 |
| ℄ Brg. & ℄ Pier 1 | 1893+00.57 | -2.92 | 717.68 | 717.70 |
| E | 1893+10.57 | -2.92 | 717.68 | 717.70 |
| F | 1893+20.57 | -2.92 | 717.68 | 717.69 |
| G | 1893+30.57 | -2.92 | 717.66 | 717.68 |
| ℄ Brg. & ℄ Pier 2 | 1893+36.57 | -2.92 | 717.65 | 717.67 |
| H | 1893+46.57 | -2.92 | 717.62 | 717.66 |
| I | 1893+56.57 | -2.92 | 717.58 | 717.64 |
| J | 1893+66.57 | -2.92 | 717.53 | 717.59 |
| K | 1893+76.57 | -2.92 | 717.47 | 717.51 |
| ℄ Brg. E. Abut. | 1893+82.07 | -2.92 | 717.44 | 717.46 |
| Bk. E. Abut. | 1893+86.61 | -2.92 | 717.41 | 717.43 |

## ℄ ROADWAY, P.G. AND LONGITUDINAL BONDED CONST. JOINT

| Location | Station | Offset | Theoretical Grade Elevations | Theoretical Grade Elevations Adjusted For Dead Load Deflection and Grinding |
|---|---|---|---|---|
| Bk. W. Abut. | 1892+47.61 | 0.00 | 717.56 | 717.58 |
| ℄ Brg. W. Abut. | 1892+52.15 | 0.00 | 717.59 | 717.61 |
| A | 1892+62.15 | 0.00 | 717.63 | 717.68 |
| B | 1892+72.15 | 0.00 | 717.67 | 717.73 |
| C | 1892+82.15 | 0.00 | 717.70 | 717.75 |
| D | 1892+92.15 | 0.00 | 717.72 | 717.75 |
| ℄ Brg. & ℄ Pier 1 | 1892+97.65 | 0.00 | 717.73 | 717.75 |
| E | 1893+07.65 | 0.00 | 717.73 | 717.75 |
| F | 1893+17.65 | 0.00 | 717.73 | 717.74 |
| G | 1893+27.65 | 0.00 | 717.71 | 717.73 |
| ℄ Brg. & ℄ Pier 2 | 1893+33.65 | 0.00 | 717.70 | 717.72 |
| H | 1893+43.65 | 0.00 | 717.67 | 717.71 |
| I | 1893+53.65 | 0.00 | 717.64 | 717.70 |
| J | 1893+63.65 | 0.00 | 717.59 | 717.65 |
| K | 1893+73.65 | 0.00 | 717.54 | 717.57 |
| ℄ Brg. E. Abut. | 1893+79.15 | 0.00 | 717.50 | 717.52 |
| Bk. E. Abut. | 1893+83.69 | 0.00 | 717.47 | 717.50 |

## BEAM #4

| Location | Station | Offset | Theoretical Grade Elevations | Theoretical Grade Elevations Adjusted For Dead Load Deflection and Grinding |
|---|---|---|---|---|
| Bk. W. Abut. | 1892+44.69 | 2.92 | 717.50 | 717.52 |
| ℄ Brg. W. Abut. | 1892+49.23 | 2.92 | 717.53 | 717.55 |
| A | 1892+59.23 | 2.92 | 717.58 | 717.62 |
| B | 1892+69.23 | 2.92 | 717.62 | 717.68 |
| C | 1892+79.23 | 2.92 | 717.65 | 717.70 |
| D | 1892+89.23 | 2.92 | 717.67 | 717.70 |
| ℄ Brg. & ℄ Pier 1 | 1892+94.73 | 2.92 | 717.68 | 717.70 |
| E | 1893+04.73 | 2.92 | 717.68 | 717.70 |
| F | 1893+14.73 | 2.92 | 717.68 | 717.70 |
| G | 1893+24.73 | 2.92 | 717.67 | 717.69 |
| ℄ Brg. & ℄ Pier 2 | 1893+30.73 | 2.92 | 717.66 | 717.68 |
| H | 1893+40.73 | 2.92 | 717.64 | 717.68 |
| I | 1893+50.73 | 2.92 | 717.60 | 717.66 |
| J | 1893+60.73 | 2.92 | 717.56 | 717.62 |
| K | 1893+70.73 | 2.92 | 717.51 | 717.54 |
| ℄ Brg. E. Abut. | 1893+76.23 | 2.92 | 717.48 | 717.50 |
| Bk. E. Abut. | 1893+80.77 | 2.92 | 717.45 | 717.47 |

## BEAM #5

| Location | Station | Offset | Theoretical Grade Elevations | Theoretical Grade Elevations Adjusted For Dead Load Deflection and Grinding |
|---|---|---|---|---|
| Bk. W. Abut. | 1892+38.86 | 8.75 | 717.37 | 717.40 |
| ℄ Brg. W. Abut. | 1892+43.40 | 8.75 | 717.40 | 717.42 |
| A | 1892+53.40 | 8.75 | 717.46 | 717.50 |
| B | 1892+63.40 | 8.75 | 717.50 | 717.56 |
| C | 1892+73.40 | 8.75 | 717.54 | 717.59 |
| D | 1892+83.40 | 8.75 | 717.57 | 717.60 |
| ℄ Brg. & ℄ Pier 1 | 1892+88.90 | 8.75 | 717.58 | 717.60 |
| E | 1892+98.90 | 8.75 | 717.59 | 717.61 |
| F | 1893+08.90 | 8.75 | 717.59 | 717.61 |
| G | 1893+18.90 | 8.75 | 717.59 | 717.61 |
| ℄ Brg. & ℄ Pier 2 | 1893+24.90 | 8.75 | 717.58 | 717.60 |
| H | 1893+34.90 | 8.75 | 717.56 | 717.60 |
| I | 1893+44.90 | 8.75 | 717.53 | 717.59 |
| J | 1893+54.90 | 8.75 | 717.50 | 717.55 |
| K | 1893+64.90 | 8.75 | 717.45 | 717.49 |
| ℄ Brg. E. Abut. | 1893+70.40 | 8.75 | 717.42 | 717.44 |
| Bk. E. Abut. | 1893+74.94 | 8.75 | 717.39 | 717.41 |

## BEAM #6

| Location | Station | Offset | Theoretical Grade Elevations | Theoretical Grade Elevations Adjusted For Dead Load Deflection and Grinding |
|---|---|---|---|---|
| Bk. W. Abut. | 1892+33.03 | 14.58 | 717.24 | 717.26 |
| ℄ Brg. W. Abut. | 1892+37.57 | 14.58 | 717.27 | 717.29 |
| A | 1892+47.57 | 14.58 | 717.33 | 717.37 |
| B | 1892+57.57 | 14.58 | 717.38 | 717.44 |
| C | 1892+67.57 | 14.58 | 717.42 | 717.47 |
| D | 1892+77.57 | 14.58 | 717.45 | 717.48 |
| ℄ Brg. & ℄ Pier 1 | 1892+83.07 | 14.58 | 717.47 | 717.49 |
| E | 1892+93.07 | 14.58 | 717.48 | 717.50 |
| F | 1893+03.07 | 14.58 | 717.49 | 717.51 |
| G | 1893+13.07 | 14.58 | 717.49 | 717.51 |
| ℄ Brg. & ℄ Pier 2 | 1893+19.07 | 14.58 | 717.49 | 717.51 |
| H | 1893+29.07 | 14.58 | 717.47 | 717.51 |
| I | 1893+39.07 | 14.58 | 717.45 | 717.51 |
| J | 1893+49.07 | 14.58 | 717.42 | 717.48 |
| K | 1893+59.07 | 14.58 | 717.38 | 717.41 |
| ℄ Brg. E. Abut. | 1893+64.57 | 14.58 | 717.35 | 717.37 |
| Bk. E. Abut. | 1893+69.11 | 14.58 | 717.33 | 717.35 |

| | |
|---|---|
| DESIGNED | JLG |
| CHECKED | CJC |
| DRAWN | UJ |
| CHECKED | JLG |

HR
HURST-ROSCHE ENGINEERS, INC.
PROFESSIONAL DESIGN NUMBER:184-000298

## TOP OF SLAB ELEVATIONS
## STRUCTURE NO. 010-0283

| SHEET NO. 6 | F.A.P. RTE. | SECTION | COUNTY | TOTAL SHEETS | SHEET NO. |
|---|---|---|---|---|---|
| 24 SHEETS | 709 | (105BR)BR | CHAMPAIGN | 55 | 18 |
| | SN 010-0283 | | CONTRACT NO. 70427 | | |
| | FED. ROAD DIST. NO. 5 | ILLINOIS | FED. AID PROJECT | | |

D-95-013-97

...\0100283-70427-006-top of slab elevations.dgn 12/16/2009 7:37:12 AM

STATE OF ILLINOIS
DEPARTMENT OF TRANSPORTATION

## NORTH EDGE OF SHOULDER

| Location | Station | Offset | Theoretical Grade Elevations | Theoretical Grade Elevations Adjusted For Grinding |
|---|---|---|---|---|
| W. End West Appr. Pav't. | 1892+34.32 | -16.00 | 717.22 | 717.24 |
| A1 | 1892+44.32 | -16.00 | 717.28 | 717.30 |
| A2 | 1892+54.32 | -16.00 | 717.33 | 717.35 |
| E. End West Appr. Pav't. | 1892+64.32 | -16.00 | 717.38 | 717.40 |

## NORTH EDGE OF PAVEMENT

| Location | Station | Offset | Theoretical Grade Elevations | Theoretical Grade Elevations Adjusted For Grinding |
|---|---|---|---|---|
| W. End West Appr. Pav't. | 1892+31.32 | -13.00 | 717.26 | 717.28 |
| A1 | 1892+41.32 | -13.00 | 717.32 | 717.34 |
| A2 | 1892+51.32 | -13.00 | 717.38 | 717.40 |
| E. End West Appr. Pav't. | 1892+61.32 | -13.00 | 717.43 | 717.45 |

## ℄ ROADWAY, PROFILE GRADE & STAGE CONST. JOINT

| Location | Station | Offset | Theoretical Grade Elevations | Theoretical Grade Elevations Adjusted For Grinding |
|---|---|---|---|---|
| W. End West Appr. Pav't. | 1892+18.32 | 0.00 | 717.36 | 717.38 |
| A1 | 1892+28.32 | 0.00 | 717.44 | 717.46 |
| A2 | 1892+38.32 | 0.00 | 717.51 | 717.53 |
| E. End West Appr. Pav't. | 1892+48.32 | 0.00 | 717.57 | 717.59 |

## SOUTH EDGE OF PAVEMENT

| Location | Station | Offset | Theoretical Grade Elevations | Theoretical Grade Elevations Adjusted For Grinding |
|---|---|---|---|---|
| W. End West Appr. Pav't. | 1892+05.32 | 13.00 | 717.05 | 717.07 |
| A1 | 1892+15.32 | 13.00 | 717.13 | 717.16 |
| A2 | 1892+25.32 | 13.00 | 717.21 | 717.24 |
| E. End West Appr. Pav't. | 1892+35.32 | 13.00 | 717.29 | 717.31 |

## SOUTH EDGE OF SHOULDER

| Location | Station | Offset | Theoretical Grade Elevations | Theoretical Grade Elevations Adjusted For Grinding |
|---|---|---|---|---|
| W. End West Appr. Pav't. | 1892+02.32 | 16.00 | 716.96 | 716.98 |
| A1 | 1892+12.32 | 16.00 | 717.05 | 717.07 |
| A2 | 1892+22.32 | 16.00 | 717.13 | 717.15 |
| E. End West Appr. Pav't. | 1892+32.32 | 16.00 | 717.20 | 717.22 |

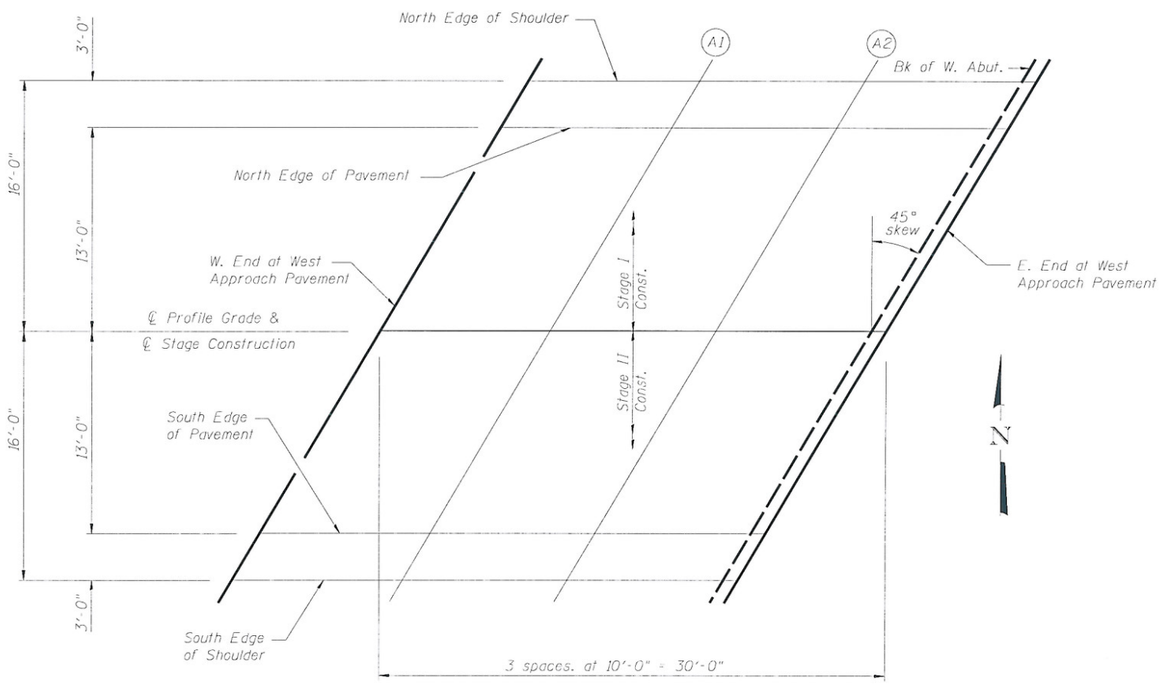


**PLAN**
West Approach

## TOP OF WEST APPROACH SLAB ELEVATIONS
## STRUCTURE NO. 010-0283

| | |
|---|---|
| DESIGNED | JLG |
| CHECKED | CJC |
| DRAWN | UJ |
| CHECKED | JLG |

HR
HURST-ROSCHE ENGINEERS, INC.
PROFESSIONAL DESIGN NUMBER 184-000298

| SHEET NO. 7 | F.A.P. RTE. | SECTION | COUNTY | TOTAL SHEETS | SHEET NO. |
|---|---|---|---|---|---|
| 24 SHEETS | 709 | (105BR)BR | CHAMPAIGN | 55 | 19 |
| | SN 010-0283 | | CONTRACT NO. 70427 | | |
| | FED. ROAD DIST. NO. 5 | ILLINOIS | FED. AID PROJECT | | |

D-95-013-97

...\0100283-70427-007-top of W.approach slab elevations.dgn 12/16/2009 7:37:14 AM

STATE OF ILLINOIS
DEPARTMENT OF TRANSPORTATION

## NORTH EDGE OF SHOULDER

| Location | Station | Offset | Theoretical Grade Elevations | Theoretical Grade Elevations Adjusted For Grinding |
|---|---|---|---|---|
| W. End East Appr. Pav't. | 1893+98.98 | -16.00 | 717.09 | 717.11 |
| A3 | 1894+08.98 | -16.00 | 717.01 | 717.03 |
| A4 | 1894+18.98 | -16.00 | 716.91 | 716.93 |
| E. End East Appr. Pav't. | 1894+28.98 | -16.00 | 716.81 | 716.83 |

## NORTH EDGE OF PAVEMENT

| Location | Station | Offset | Theoretical Grade Elevations | Theoretical Grade Elevations Adjusted For Grinding |
|---|---|---|---|---|
| W. End East Appr. Pav't. | 1893+95.98 | -13.00 | 717.18 | 717.20 |
| A3 | 1894+05.98 | -13.00 | 717.10 | 717.12 |
| A4 | 1894+15.98 | -13.00 | 717.00 | 717.02 |
| E. End East Appr. Pav't. | 1894+25.98 | -13.00 | 716.90 | 716.92 |

## ℄ ROADWAY, PROFILE GRADE & STAGE CONST. JOINT

| Location | Station | Offset | Theoretical Grade Elevations | Theoretical Grade Elevations Adjusted For Grinding |
|---|---|---|---|---|
| W. End East Appr. Pav't. | 1893+82.98 | 0.00 | 717.48 | 717.50 |
| A3 | 1893+92.98 | 0.00 | 717.41 | 717.43 |
| A4 | 1894+02.98 | 0.00 | 717.33 | 716.35 |
| E. End East Appr. Pav't. | 1894+12.98 | 0.00 | 717.24 | 716.26 |

## SOUTH EDGE OF PAVEMENT

| Location | Station | Offset | Theoretical Grade Elevations | Theoretical Grade Elevations Adjusted For Grinding |
|---|---|---|---|---|
| W. End East Appr. Pav't. | 1893+69.98 | 13.00 | 717.36 | 717.38 |
| A3 | 1893+79.98 | 13.00 | 717.30 | 717.32 |
| A4 | 1893+89.98 | 13.00 | 717.23 | 716.25 |
| E. End East Appr. Pav't. | 1894+99.98 | 13.00 | 717.15 | 716.17 |

## SOUTH EDGE OF SHOULDER

| Location | Station | Offset | Theoretical Grade Elevations | Theoretical Grade Elevations Adjusted For Grinding |
|---|---|---|---|---|
| W. End East Appr. Pav't. | 1893+66.98 | 16.00 | 717.31 | 717.33 |
| A3 | 1893+76.98 | 16.00 | 717.25 | 717.27 |
| A4 | 1893+86.98 | 16.00 | 717.19 | 717.21 |
| E. End East Appr. Pav't. | 1893+96.98 | 16.00 | 717.11 | 717.13 |

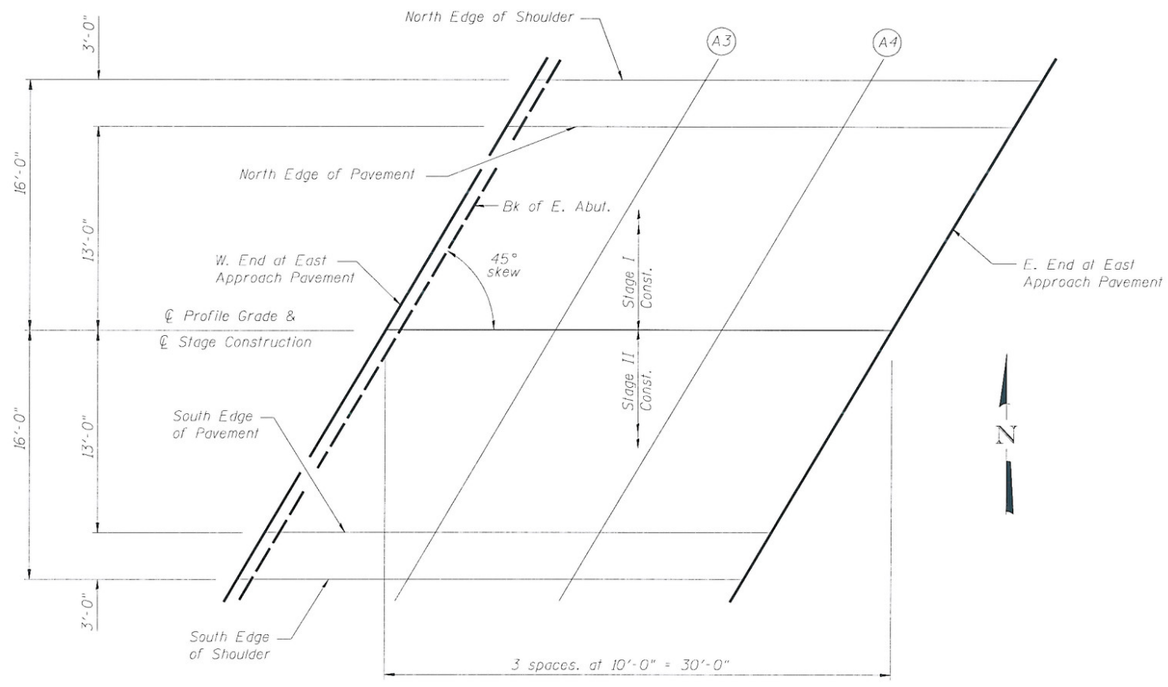


**PLAN**
East Approach

| | |
|---|---|
| DESIGNED | JLG |
| CHECKED | CJC |
| DRAWN | UJ |
| CHECKED | JLG |

HR
HURST-ROSCHE ENGINEERS, INC.
PROFESSIONAL DESIGN NUMBER:184-000298

## TOP OF EAST APPROACH SLAB ELEVATIONS
## STRUCTURE NO. 010-0283

| SHEET NO. 8 | F.A.P. RTE. | SECTION | COUNTY | TOTAL SHEETS | SHEET NO. |
|---|---|---|---|---|---|
| 24 SHEETS | 709 | (105BR)BR | CHAMPAIGN | 55 | 20 |
| | SN 010-0283 | | CONTRACT NO. 70427 | | |
| | FED. ROAD DIST. NO. 5 | ILLINOIS | FED. AID PROJECT | | |

D-95-013-97

...\0100283-70427-008-top of E.approach slab elevations.dgn 12/16/2009 7:37:15 AM

# STATE OF ILLINOIS
# DEPARTMENT OF TRANSPORTATION

* Order $a(E)$ and $a_1(E)$ bars full length. Cut to fit skew and use remainder of bars in opposite end.

**Dimensions are based on a Rolled Rail Strip Seal Joint. If the Contractor elects to use the Welded Rail Strip Seal Joint, deck dimensions may require adjustments to satisfy the details on sheet 11 of 24.

Notes:
See Sheet 10 of 24 for superstructure details and Bill of Material.
Bars indicated thus 31 x 5-#5 etc. indicates 31 lines of bars with 5 lengths per line.
See Sheet 10 of 24 for parapet reinforcement.

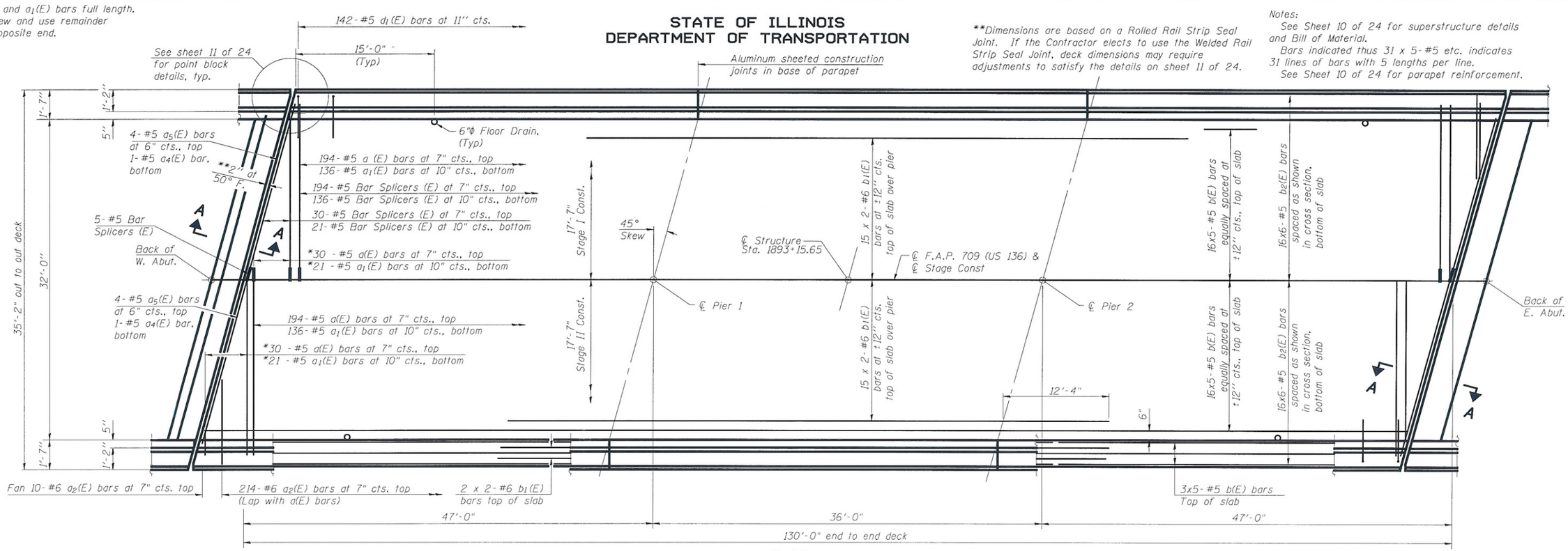


## PLAN

## MINIMUM BAR LAP

#5 bar = 2'-2"
#6 bar = 2'-7"

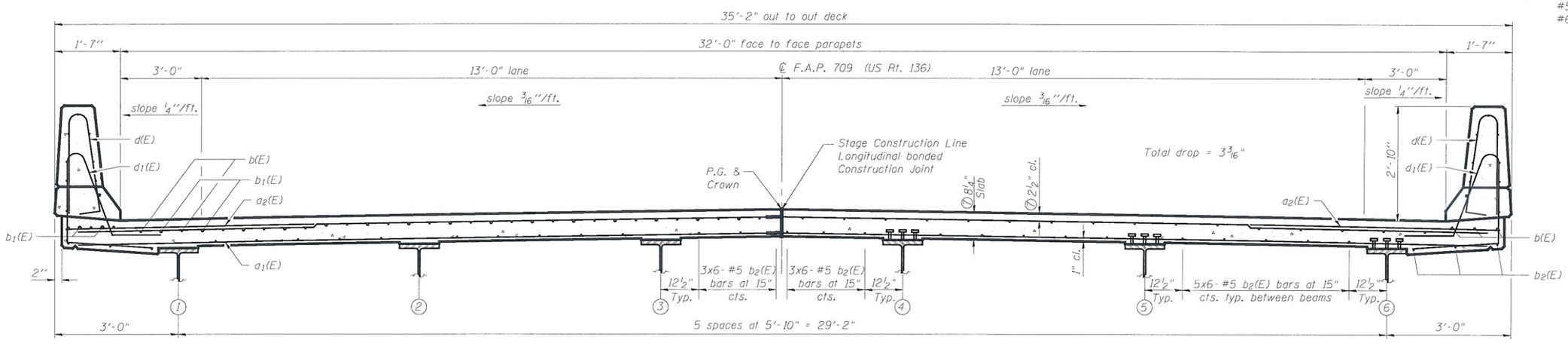


NEAR PIER

NEAR MIDSPAN

## CROSS SECTION

(Looking East)

⑦ Prior to Grinding

## SUPERSTRUCTURE PLAN
## STRUCTURE NO. 010-0283

| | |
|---|---|
| DESIGNED | JLG |
| CHECKED | JSP |
| DRAWN | UJ |
| CHECKED | JLG |

HR
HURST-ROSCHE ENGINEERS, INC.
PROFESSIONAL DESIGN NUMBER: 184-000298

| SHEET NO. 9 | F.A.P. RTE. | SECTION | COUNTY | TOTAL SHEETS | SHEET NO. |
|---|---|---|---|---|---|
| 24 SHEETS | 709 | (105BR)BR | CHAMPAIGN | 55 | 21 |
| | SN 010-0283 | | CONTRACT NO. 70427 | | |
| | FED. ROAD DIST. NO. 5 ILLINOIS FED. AID PROJECT | | | | |

D-95-013-97

...\0100283-70427-009-superstructure plan.dgn 1/12/2010 11:23:57 AM

STATE OF ILLINOIS
DEPARTMENT OF TRANSPORTATION

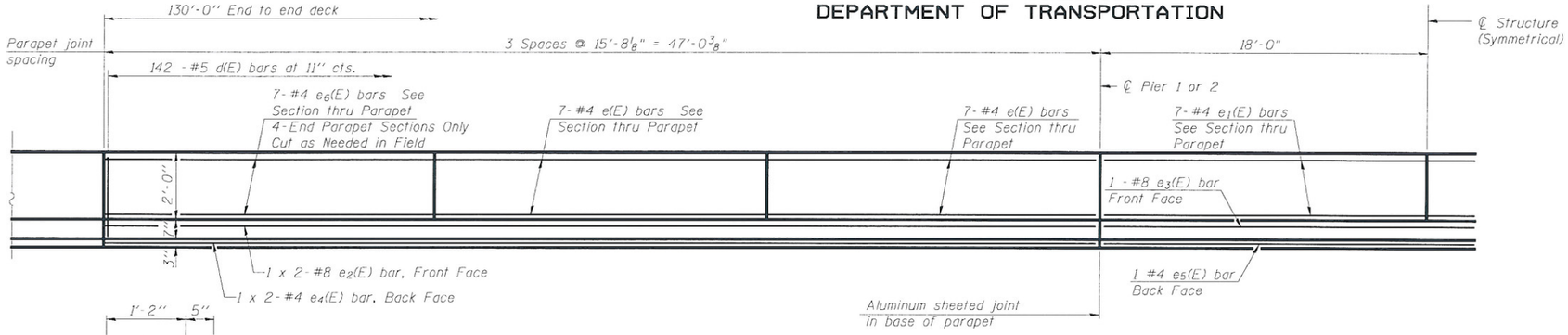


## INSIDE ELEVATION OF PARAPET

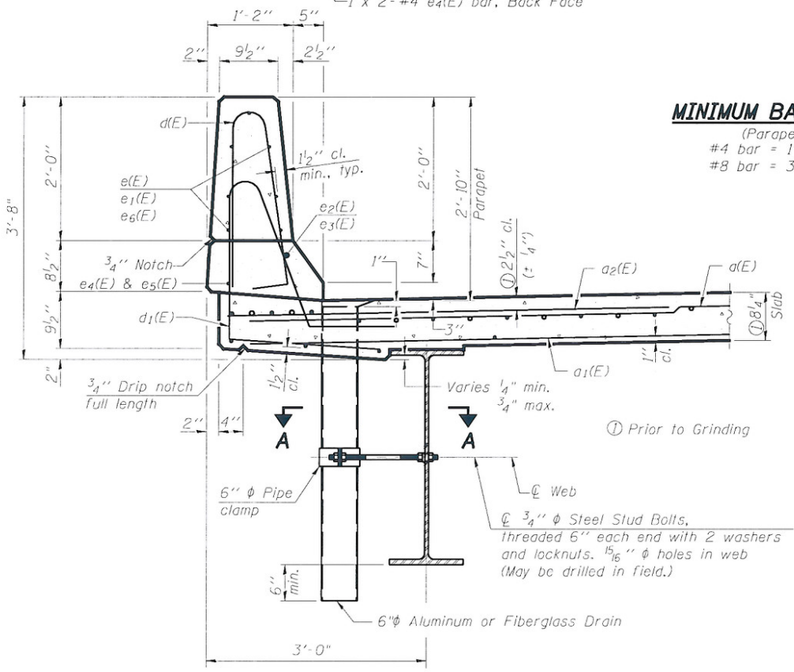


① Prior to Grinding

## SECTION THRU PARAPET

## MINIMUM BAR LAP

(Parapet)
#4 bar = 1'-4"
#8 bar = 3'-5"

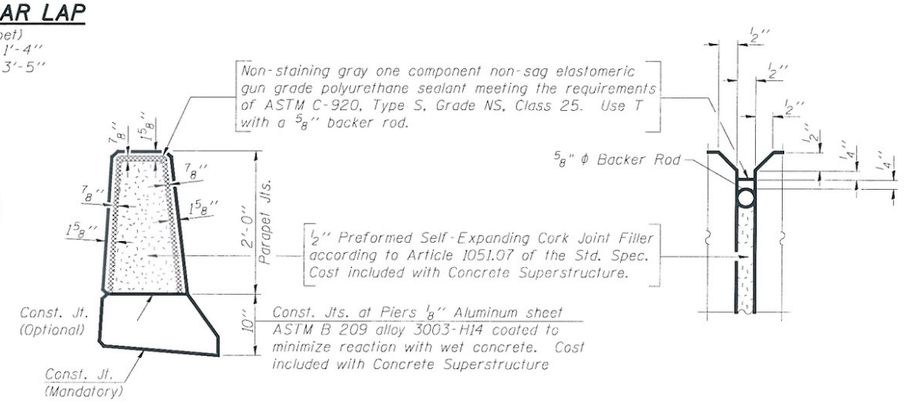


## PARAPET JOINT DETAILS

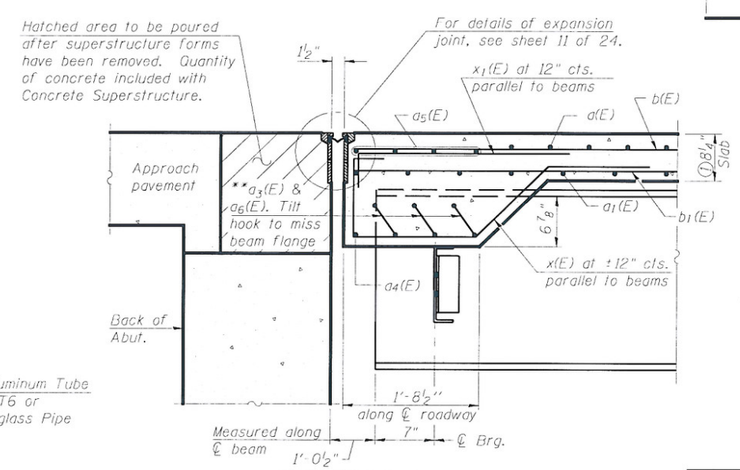


## SECTION A-A

(@ Rt L's)

① Prior to Grinding
** a6(E) bars are used with 3 bar splicers in between beams 3 & 4. a3(E) bars are used between all other beam spacings.

## SUPERSTRUCTURE BILL OF MATERIAL

| Bar | No. | Size | Length | Shape |
|---|---|---|---|---|
| a(E) | 448 | #5 | 16'-11" | |
| a1(E) | 314 | #5 | 16'-9" | |
| a2(E) | 448 | #6 | 6'-0" | |
| a3(E) | 24 | #5 | 9'-1" | |
| a4(E) | 4 | #5 | 24'-1" | |
| a5(E) | 16 | #5 | 24'-3" | |
| a6(E) | 6 | #5 | 4'-7" | |
| | | | | |
| b(E) | 190 | #5 | 27'-8" | |
| b1(E) | 68 | #6 | 31'-7" | |
| b2(E) | 192 | #5 | 23'-5" | |
| | | | | |
| d(E) | 284 | #5 | 5'-7" | |
| d1(E) | 284 | #5 | 7'-8" | |
| | | | | |
| e(E) | 56 | #4 | 15'-4" | |
| e1(E) | 28 | #4 | 17'-8" | |
| e2(E) | 8 | #8 | 26'-6" | |
| e3(E) | 2 | #8 | 35'-8" | |
| e4(E) | 8 | #4 | 24'-1" | |
| e5(E) | 2 | #4 | 35'-8" | |
| e6(E) | 28 | #4 | 16'-4" | |
| | | | | |
| x(E) | 72 | #5 | 6'-5" | |
| x1(E) | 72 | #5 | 4'-1" | |
| Reinforcement Bars, Epoxy Coated | | | Pound | 38,410 |
| Concrete Superstructure | | | Cu. Yds. | 152.1 |

Bars indicated thus 1 x 2-#4 etc. indicates 1 line of bars with 2 lengths per line.

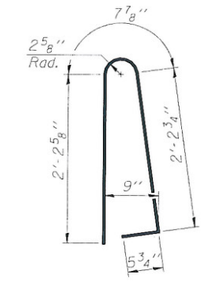


## BAR d(E)

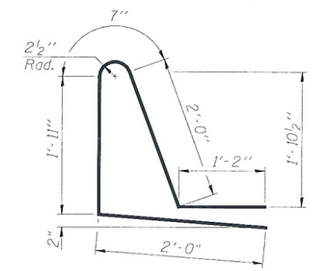


## BAR d1(E)

## SUPERSTRUCTURE DETAILS
## STRUCTURE NO.

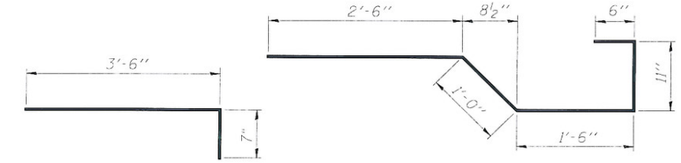


## BAR x1(E)

## BAR x(E)

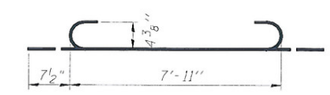


## a3(E) BAR

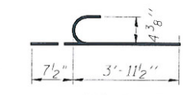


## a6(E) BAR

## SUPERSTRUCTURE DETAILS
## STRUCTURE NO. 010-0283

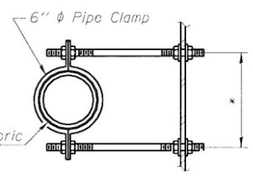


## SECTION A-A

*Dimension as required by Pipe Clamp

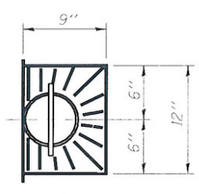


## TOP PLAN

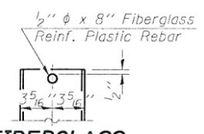


## FIBERGLASS PIPE

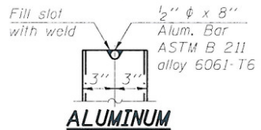


## ALUMINUM TUBE

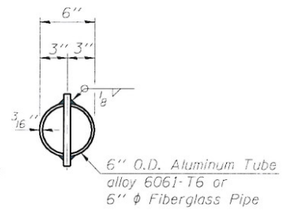


## TOP PLAN

(Showing Aluminum Tube)

| | |
|---|---|
| DESIGNED | JLG |
| CHECKED | JSP |
| DRAWN | UJ |
| CHECKED | JLG |

HR
HURST-ROSCHE ENGINEERS, INC.
PROFESSIONAL DESIGN NUMBER 184-000298

| SHEET NO. 10 | F.A.P. RTE. | SECTION | COUNTY | TOTAL SHEETS | SHEET NO. |
|---|---|---|---|---|---|
| 24 SHEETS | 709 | (105BR)BR | CHAMPAIGN | 55 | 22 |
| | SN 010-0283 | | CONTRACT NO. 70427 | | |
| | FED. ROAD DIST. NO. 5 ILLINOIS FED. AID PROJECT | | | | |

D-95-013-97

...\0100283-70427-010-superstructure details.dgn 12/16/2009 10:23:54 AM

STATE OF ILLINOIS
DEPARTMENT OF TRANSPORTATION

* Granular or solid flux filled headed studs conforming to Article 1006.32 of the Std. Specs., automatically end welded.

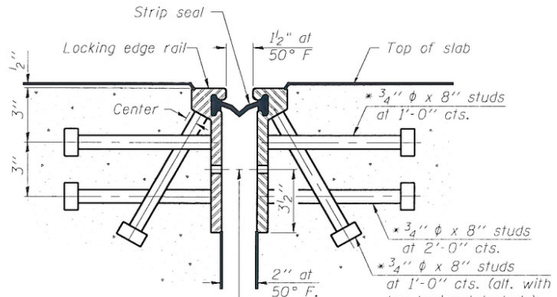


## SECTION THRU ROLLED RAIL JOINT

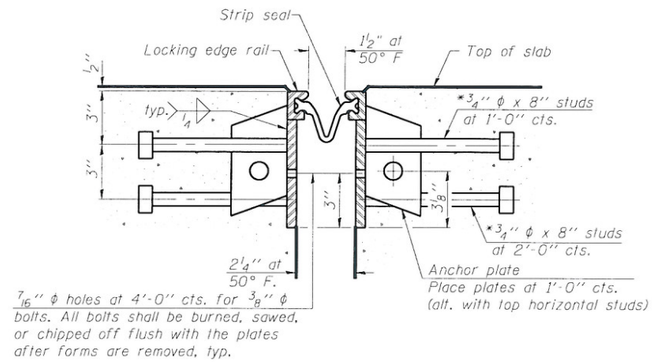


## SECTION THRU WELDED RAIL JOINT

Notes:

The strip seal shall be made continuous and shall have a minimum thickness of ¼". The configuration of the strip seal shall match the configuration of the Locking Edge Rails. Open or "webbed" strip seal gland configurations are not permitted. The gland shall be sized for a maximum rated movement of 4 inches.

The height and thickness of the Locking Edge Rails shown are minimum dimensions. The actual configuration of the Locking Edge Rails and matching strip seal may vary from manufacturer to manufacturer. Flanged edge rails will not be allowed. Locking Edge Rails may be spliced at slope discontinuities and stage construction joints.

The manufacturer's recommended installation methods shall be followed.

The joint opening and deck dimensions detailed on the superstructure are based on a rolled rail expansion joint. If the Contractor elects to use the welded rail expansion joint, the opening and deck dimensions shall be modified according to the dimensions detailed on this sheet. Required modifications shall be made at no additional cost to the State.

All steel components shall be galvanized after fabrication according to Article 520.03 of the Standard Specifications.

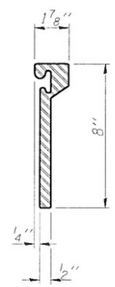

## ROLLED EXTRUDED RAIL

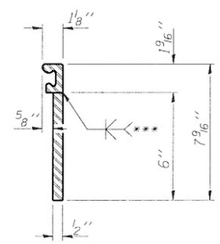

## WELDED RAIL

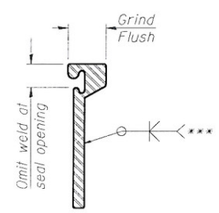


***Back gouge not required if complete joint penetration is verified by mock-up.

## LOCKING EDGE RAIL SPLICE

The inside of the locking edge rail groove shall be free of weld residue.

## LOCKING EDGE RAILS

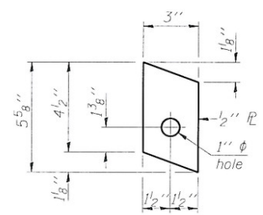


## ANCHOR PL

(for welded rail)

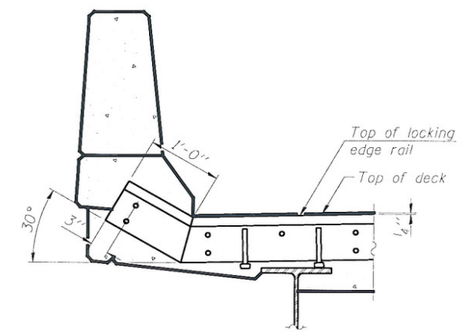


## AT PARAPET

## TYPICAL END TREATMENTS

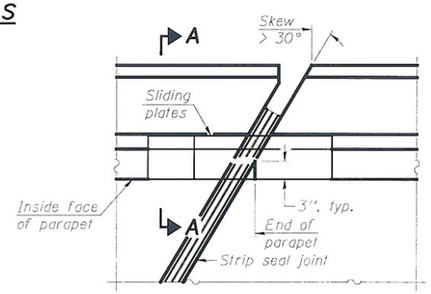


## PLAN

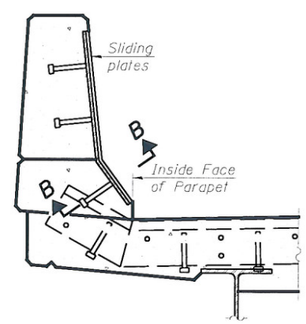


## SECTION A-A

## POINT BLOCK DETAILS

(for skews > 30°)

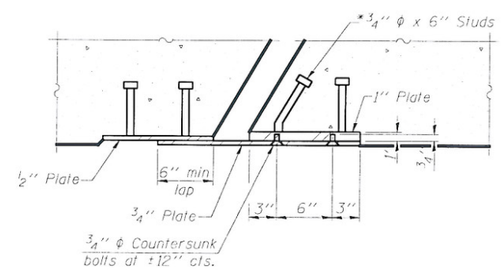


## SECTION B-B

## BILL OF MATERIAL

| Item | Unit | Total |
|---|---|---|
| Preformed Joint Strip Seal | Foot | 97 |

## MODIFIED PREFORMED JOINT STRIP SEAL STRUCTURE NO. 010-0283

| | | | | | |
|---|---|---|---|---|---|
| SHEET NO. 11 | F.A.P. RTE. | SECTION | COUNTY | TOTAL SHEETS | SHEET NO. |
| | 709 | (105BR)BR | CHAMPAIGN | 55 | 23 |
| 24 SHEETS | SN 010-0283 | | CONTRACT NO. 70427 | | |
| | FED. ROAD DIST. NO. 5 ILLINOIS FED. AID PROJECT | | | | |

| | |
|---|---|
| DESIGNED | JLG |
| CHECKED | JSP |
| DRAWN | UJ |
| CHECKED | JLG |

HR HURST-ROSCHE ENGINEERS, INC.
PROFESSIONAL DESIGN NUMBER 184-000298

D-95-013-97

...\0100283-70427-011-preformed joint strip seal.dgn 12/16/2009 7:37:20 AM

STATE OF ILLINOIS
DEPARTMENT OF TRANSPORTATION

Notes:
See sheet 13 of 24 for Sections C-C & D-D.
$a_{10}$ (E), $a_{11}$ (E), and $w_{10}$ (E) bar spacings measured parallel to ℄ Rdwy.

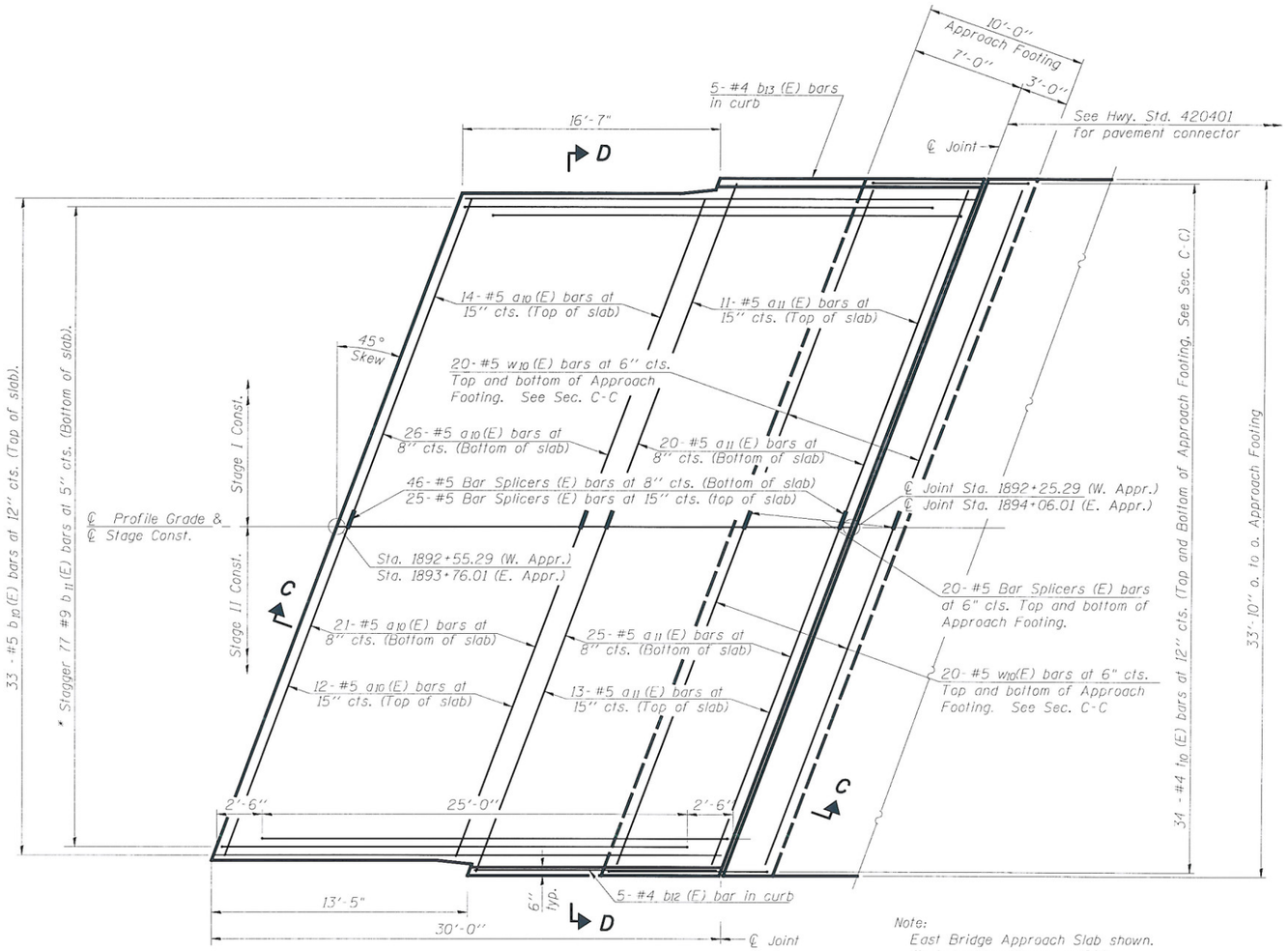


Note:
East Bridge Approach Slab shown.
West Approach rotated 180°.

**PLAN**

* Tilt #9 $b_{11}$ (E) bars as required to maintain clearance.

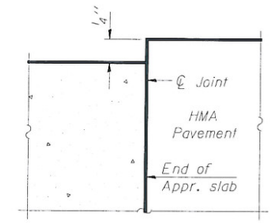


**FLEXIBLE PAVEMENT**

**DETAIL A**

Note:
Approach Roadway consists of 6½" of asphalt pavement over concrete pavement.

| | |
|---|---|
| DESIGNED | JLG |
| CHECKED | JSP |
| DRAWN | UJ |
| CHECKED | JLG |

HR
HURST-ROSCHE ENGINEERS, INC.
PROFESSIONAL DESIGN NUMBER: 184-000298

**BRIDGE APPROACH SLAB DETAILS**
**STRUCTURE NO. 010-0283**

| SHEET NO. 12 | F.A.P. RTE. | SECTION | COUNTY | TOTAL SHEETS | SHEET NO. |
|---|---|---|---|---|---|
| 24 SHEETS | 709 | (105BR)BR | CHAMPAIGN | 55 | 24 |
| | SN 010-0283 | | CONTRACT NO. 70427 | | |
| | FED. ROAD DIST. NO. 5 ILLINOIS FED. AID PROJECT | | | | |

D-95-013-97

...\0100283-70427-012-bridge approach slab details.dgn 12/16/2009 7:37:21 AM

STATE OF ILLINOIS
DEPARTMENT OF TRANSPORTATION

Notes:
See sheet 12 of 24 for Detail A.
Approach slab concrete shall be paid for as Concrete Superstructure.
Approach footing concrete shall be paid for as Concrete Structures.
Reinforcement shall be paid for as Reinforcement Bars, Epoxy Coated.
For $v_{20}$(E) bar details, see sheet 19 of 24.
The approach footing maximum applied service bearing pressure (Qmax) = 2.0 ksf.
For bar splicer details, see sheet 22 of 24.
Cost of excavation for approach footing included with Concrete Structures.
For Porous Granular Embankment (Special) and drainage treatment details, see sheet 2 of 24.

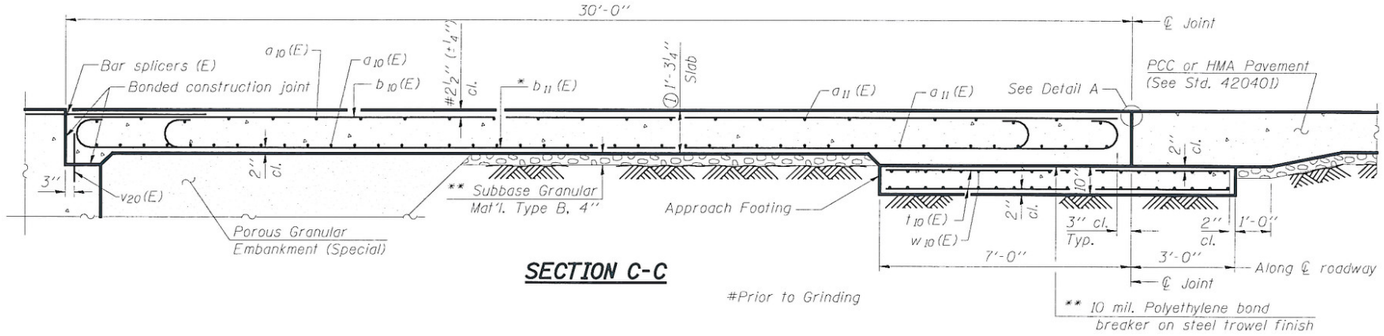


SECTION C-C

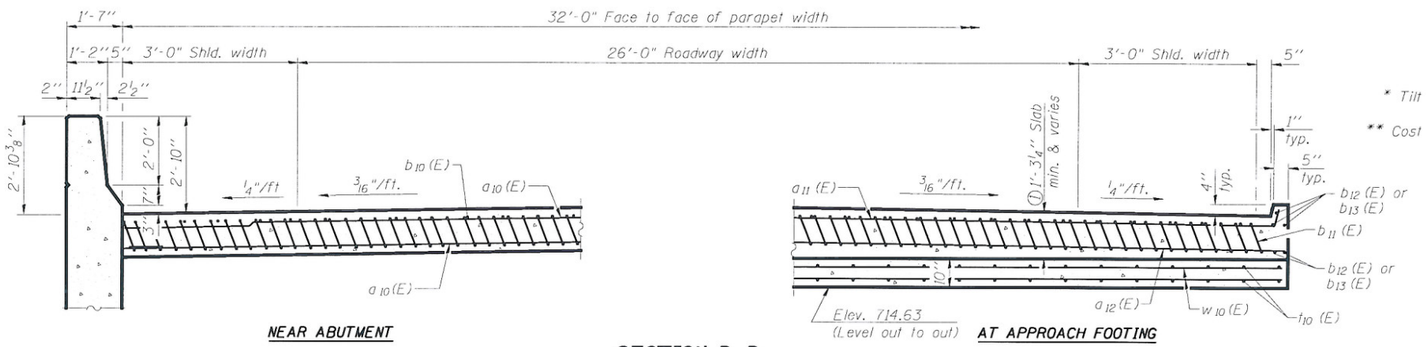


NEAR ABUTMENT

SECTION D-D
(See Plan for dimensions not shown)

AT APPROACH FOOTING

① Prior to Grinding

* Tilt #9 $b_{11}$(E) bars as required to maintain clearance.

** Cost included with Concrete Superstructure.

## BILL OF MATERIAL (TWO APPROACHES)

| Bar | No. | Size | Length | Shape |
|---|---|---|---|---|
| $a_{10}$(E) | 146 | #5 | 22'-3" | |
| $a_{11}$(E) | 138 | #5 | 23'-6" | |
| $b_{10}$(E) | 66 | #5 | 29'-8" | |
| $b_{11}$(E) | 154 | #9 | 29'-10" | |
| $b_{12}$(E) | 10 | #4 | 20'-0" | |
| $b_{13}$(E) | 10 | #4 | 15'-0" | |
| $t_{10}$(E) | 136 | #4 | 9'-8" | |
| $w_{10}$(E) | 160 | #5 | 23'-7" | |
| Concrete Superstructure | | | Cu. Yd. | 66.4 |
| Concrete Structures | | | Cu. Yd. | 29.5 |
| * Reinforcement Bars, Epoxy Coated | | | Pound | 29,490 |

Note: Bill of Material is for two approach pavements.

*Reinforcement Bars, Epoxy Coated
Superstructure = 24,670 lbs
Substructure = 4,820 lbs

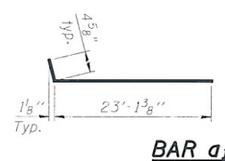


BAR $a_{11}$(E)

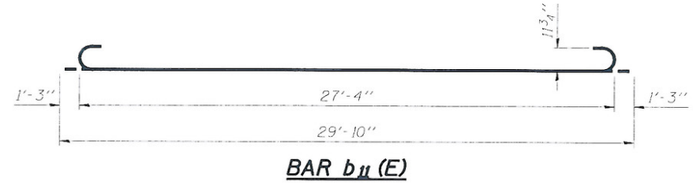


BAR $b_{11}$(E)

| | |
|---|---|
| DESIGNED | JLG |
| CHECKED | JSP |
| DRAWN | UJ |
| CHECKED | JLG |

HR
HURST-ROSCHE ENGINEERS, INC.
PROFESSIONAL DESIGN NUMBER 184-000298

## BRIDGE APPROACH SLAB DETAILS
## STRUCTURE NO. 010-0283

| SHEET NO. 13 | F.A.P. RTE. | SECTION | COUNTY | TOTAL SHEETS | SHEET NO. |
|---|---|---|---|---|---|
| 24 SHEETS | 709 | (105BR)BR | CHAMPAIGN | 55 | 25 |
| | SN 010-0283 | | CONTRACT NO. 70427 | | |
| | FED. ROAD DIST. NO. 5 ILLINOIS FED. AID PROJECT | | | | |

D-95-013-97

...\0100283-70427-013-bridge approach slab details.dgn 12/16/2009 7:37:22 AM

STATE OF ILLINOIS
DEPARTMENT OF TRANSPORTATION

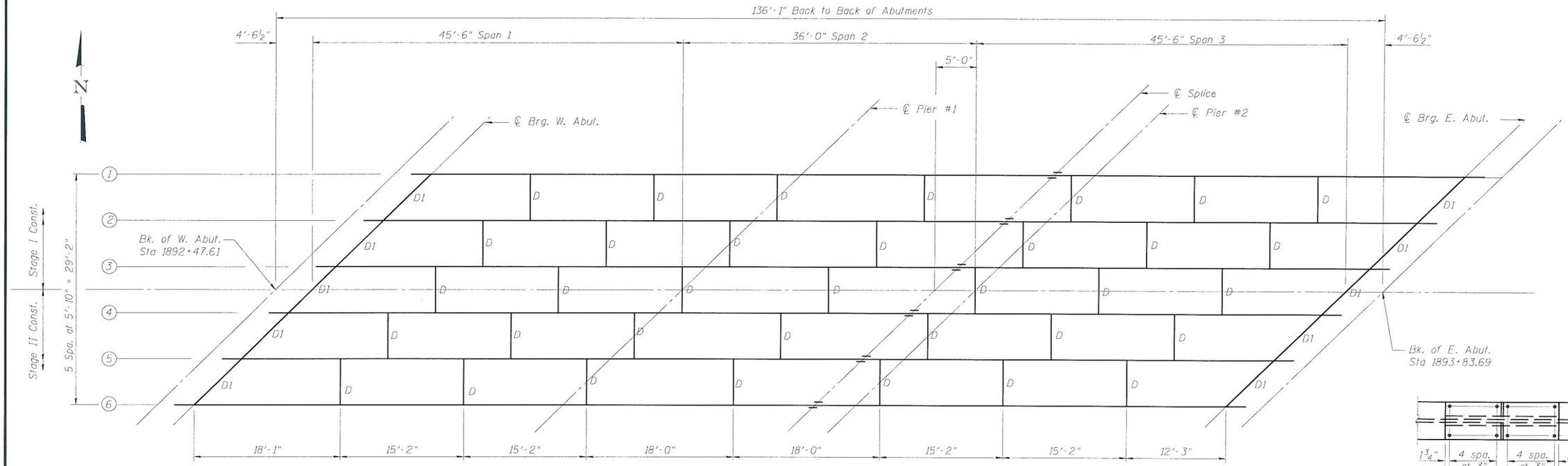


## FRAMING PLAN

All beams shall be W27x84 AASHTO M270 Grade 50 (NTR)
All bearing stifferner plates shall be AASHTO M270 Grade 50

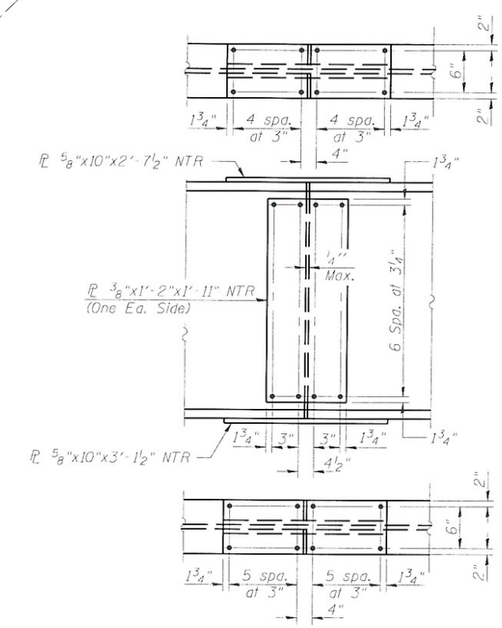


## FIELD SPLICE DETAIL

| | |
|---|---|
| DESIGNED | JLG |
| CHECKED | JSP |
| DRAWN | UJ |
| CHECKED | JLG |

HR
HURST-ROSCHE ENGINEERS, INC.
PROFESSIONAL DESIGN NUMBER: 184-000290

Notes:

All cross frames or diaphragms shall be installed as steel is erected and secured with erection pins and bolts except as otherwise noted. Individual cross frames or diaphragms at supports may be temporarily disconnected to install bearing anchor rods.

Load carrying components designated "NTR" shall conform to the Supplemental Requirements for Notch Toughness, Zone 2.

## FRAMING PLAN
## STRUCTURE NO. 010-0283

| SHEET NO. 14 | F.A.P. RTE. | SECTION | COUNTY | TOTAL SHEETS | SHEET NO. |
|---|---|---|---|---|---|
| | 709 | (105BR)BR | CHAMPAIGN | 55 | 26 |
| 24 SHEETS | SN 010-0283 | | CONTRACT NO. 70427 | | |
| | FED. ROAD DIST. NO. 5 ILLINOIS FED. AID PROJECT | | | | |

D-95-013-97

...\0100283-70427-014-framing plan.dgn 12/16/2009 7:37:23 AM

STATE OF ILLINOIS
DEPARTMENT OF TRANSPORTATION

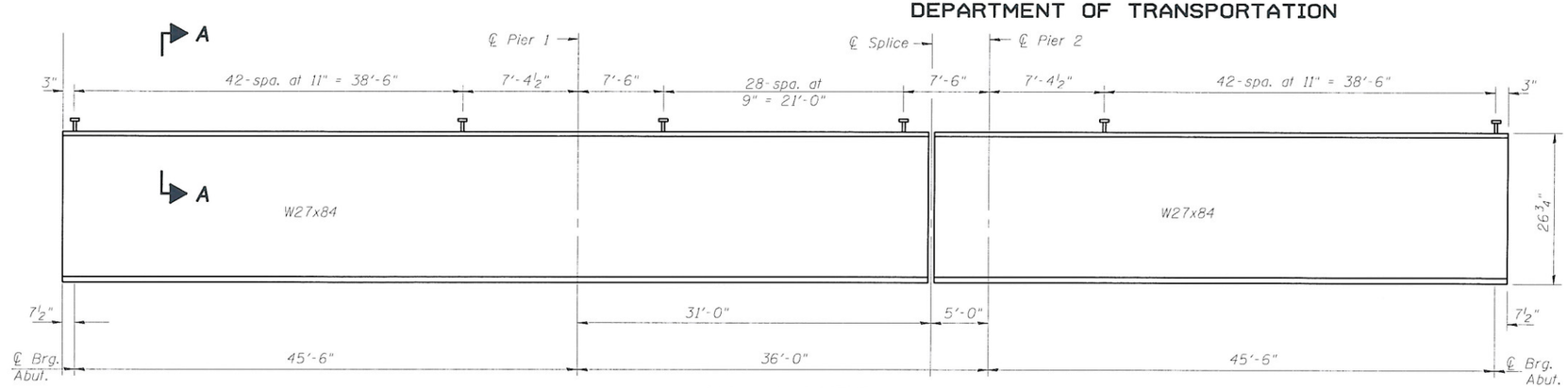


## BEAM ELEVATION

"NTR" denotes plates to which notch toughness requirements are applicable.

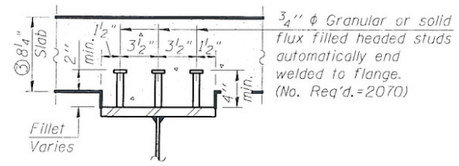


## SECTION A-A

③ Prior to Grinding

* Cost of Timber Block Posts is included with Structural Steel.

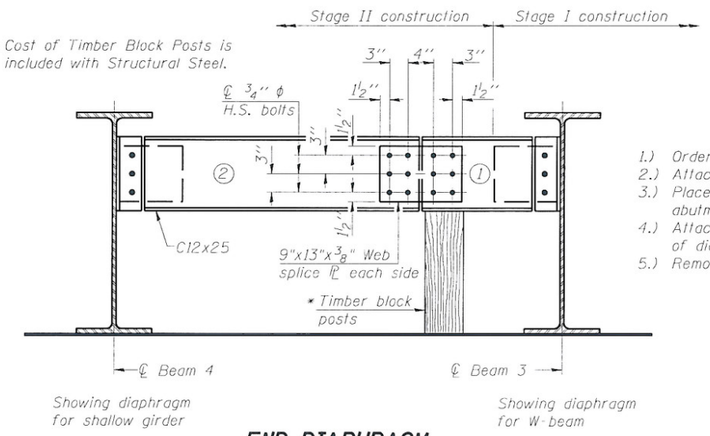


## END DIAPHRAGM

## END DIAPHRAGM STAGE CONSTRUCTION SEQUENCE

1.) Order Diaphragm in two sections.
2.) Attach section ① of Diaphragm to Beam 3.
3.) Place Timber Block Posts between section ① of diaphragm and abutment bearing section.
4.) Attach section ② of diaphragm to both Beam 4 and section ① of diaphragm during Stage II Construction with splice plates.
5.) Remove Timber Block Posts.

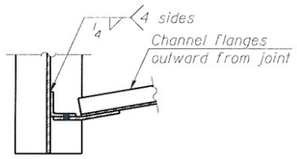


## SECTION A-A

| INTERIOR BEAM MOMENT TABLE | | | | |
|---|---|---|---|---|
| | | 0.4 Sp. 1 or 0.6 Sp. 3 | Pier 1 or 2 | .5 Sp. 2 |
| $I_s$ | ($in^4$) | 2850 | 2850 | 2850 |
| $I_c(n)$ | ($in^4$) | 8994 | - | - |
| $I_c(3n)$ | ($in^4$) | 6663 | - | - |
| $S_s$ | ($in^3$) | 213 | 213 | 213 |
| $S_c(n)$ | ($in^3$) | 342 | - | - |
| $S_c(3n)$ | ($in^3$) | 308 | - | - |
| Z | ($in^3$) | - | 244 | 244 |
| DC1 | (k/') | 0.716 | 0.716 | 0.716 |
| $M_{DC1}$ | ('k) | 128 | 125 | -9 * |
| DC2 | (k/') | 0.150 | 0.150 | 0.150 |
| $M_{DC2}$ | ('k) | 29 | 21 | 3 |
| DW | (k/') | 0.292 | 0.292 | 0.292 |
| $M_{DW}$ | ('k) | 56 | 41 | 6 |
| $M_{LL+IM}$ | ('k) | 363 | 186 | 209 |
| $M_u$ (Strength I) | ('k) | 932 | 570 | 368 |
| $\phi_f M_n$, $\phi_f M_{nc}$ | ('k) | 1710 | 1017 | 1841 |
| $f_s$ DC1 | (ksi) | 7.2 | 7.0 | -0.5 |
| $f_s$ DC2 | (ksi) | 1.1 | 1.2 | 0.1 |
| $f_s$ DW | (ksi) | 2.2 | 2.3 | 0.2 |
| $f_s$ 1.3(LL+IM) | (ksi) | 16.6 | 13.6 | 9.5 |
| $f_s$ (Service II) | (ksi) | 27.1 | 24.1 | 9.4 |
| $V_f$ | (k) | 20.5 | | |

* Section in negative moment bending

$I_s$, $S_s$: Non-composite moment of inertia and section modulus of the steel section used for computing $f_s$ (Total-Strength I, and Service II) due to non-composite dead loads ($in.^4$ and $in.^3$).
$I_c(n)$, $S_c(n)$: Composite moment of inertia and section modulus of the steel and deck based upon the modular ratio, "n", used for computing $f_s$ (Total-Strength I, and Service II) due to short-term composite live loads ($in.^4$ and $in.^3$).
$I_c(3n)$, $S_c(3n)$: Composite moment of inertia and section modulus of the steel and deck based upon 3 times the modular ratio, "3n", used for computing $f_s$ (Total-Strength I, and Service II) due to long-term composite (superimposed) dead loads ($in.^4$ and $in.^3$).
Z: Plastic Section Modulus of the steel section in non-composite areas.

DC1: Un-factored non-composite dead load (kips/ft.).
$M_{DC1}$: Un-factored moment due to non-composite dead load (kip-ft.).
DC2: Un-factored long-term composite (superimposed excluding future wearing surface) dead load (kips/ft.).
$M_{DC2}$: Un-factored moment due to long-term composite (superimposed excluding future wearing surface) dead load (kip-ft.).
DW: Un-factored long-term composite (superimposed future wearing surface only) dead load (kips/ft.).
$M_{DW}$: Un-factored moment due to long-term composite (superimposed future wearing surface only) dead load (kip-ft.).
$M_{LL+IM}$: Un-factored live load moment plus dynamic load allowance (impact) (kip-ft.).
$M_u$ (Strength I): Factored design moment (kip-ft.).
$1.25\ (M_{DC1} + M_{DC2}) + 1.5\ M_{DW} + 1.75\ M_{LL+IM}$
$\phi_f M_n$: Compact composite positive moment capacity computed according to Article 6.10.7.1 (kip-ft.).
$\phi_f M_{nc}$: Compact non-composite negative moment capacity computed according to Article A6.1.1 (kip-ft.).
$f_s$ (Service II): Sum of stresses as computed from the moments below (ksi).
$M_{DC1} + M_{DC2} + M_{DW} + 1.3\ M_{LL+IM}$
$f_s$ (Total)(Strength I): Sum of stresses as computed from the moments below on non-compact section (ksi).
$1.25\ (M_{DC1} + M_{DC2}) + 1.5\ M_{DW} + 1.75\ M_{LL+IM}$
$V_f$: Maximum factored shear range in composite portion of span computed according to Article 6.10.10.

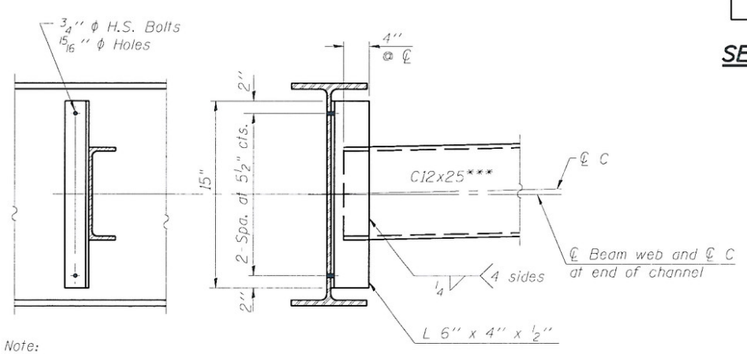


Note:
Two hardened washers required for each set of oversized holes.

## INTERIOR DIAPHRAGM "D"

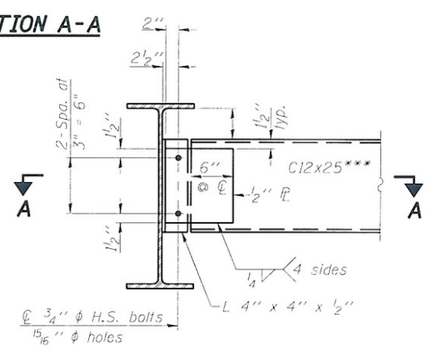


## END DIAPHRAGM "D1"

Note:
Two hardened washers required for each set of oversized holes.

*** C12x30 is permitted to facilitate material acquisition. Calculated weight of structural steel is based on the lighter section. C12x30, if utilized, shall be provided at no extra cost to the Department.

| INTERIOR BEAM REACTION TABLE | | | |
|---|---|---|---|
| | | Abut. | Pier |
| $R_{DC1}$ | (k) | 14.2 | 31.9 |
| $R_{DC2}$ | (k) | 3.0 | 6.6 |
| $R_{DW}$ | (k) | 5.7 | 12.8 |
| $R_{LL+IM}$ | (k) | 73.1 | 77.2 |
| $R_{Total}$ | (k) | 96.0 | 128.5 |

| Beam Number | W. Abut. | Pier 1 | ℄ Splice | Pier 2 | E. Abut. |
|---|---|---|---|---|---|
| 1 | 716.69 | 716.68 | 716.67 | 716.65 | 716.44 |
| 2 | 716.78 | 716.79 | 716.79 | 716.77 | 716.59 |
| 3 | 716.84 | 716.87 | 716.89 | 716.87 | 716.73 |
| 4 | 716.81 | 716.86 | 716.90 | 716.89 | 716.76 |
| 5 | 716.69 | 716.77 | 716.82 | 716.81 | 716.71 |
| 6 | 716.54 | 716.65 | 716.72 | 716.71 | 716.63 |

## TOP OF BEAM ELEVATIONS

(for Fabrication use only)

Notes:
Load carrying components designated "NTR" shall conform to the Supplemental Requirements for Notch Toughness, Zone 2.

## STRUCTURAL STEEL DETAILS
## STRUCTURE NO. 010-0283

| | | | | | |
|---|---|---|---|---|---|
| DESIGNED | JLG | | | | |
| CHECKED | JSP | | | | |
| DRAWN | UJ | | | | |
| CHECKED | JLG | | | | |

HR
HURST-ROSCHE ENGINEERS, INC.
PROFESSIONAL DESIGN NUMBER:184-000296

| SHEET NO. 15 | F.A.P. RTE. | SECTION | COUNTY | TOTAL SHEETS | SHEET NO. |
|---|---|---|---|---|---|
| | 709 | (105BR)BR | CHAMPAIGN | 55 | 27 |
| 24 SHEETS | SN 010-0283 | | CONTRACT NO. 70427 | | |
| | FED. ROAD DIST. NO. 5 ILLINOIS FED. AID PROJECT | | | | |

...\0100283-70427-015-structural steel details.dgn 12/16/2009 10:07:56 AM

STATE OF ILLINOIS
DEPARTMENT OF TRANSPORTATION

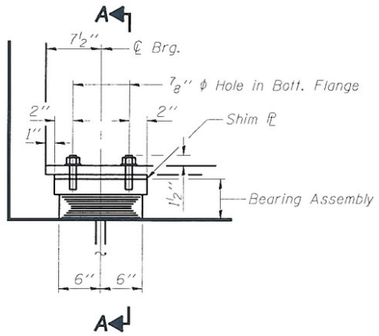


ELEVATION AT ABUT.

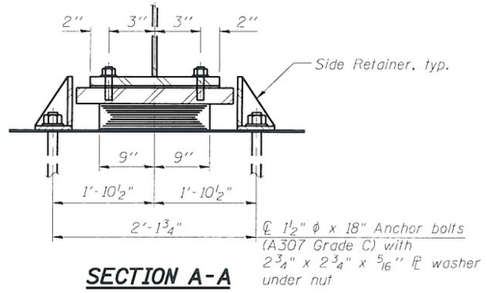


SECTION A-A

TYPE I ELASTOMERIC EXP. BRG.

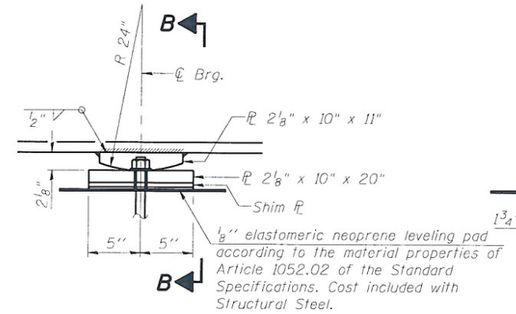


ELEVATION AT PIER

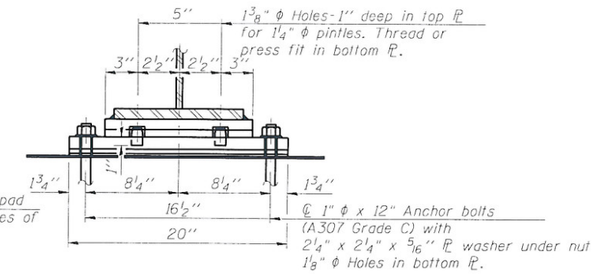


SECTION B-B

FIXED BEARING

Note: Cost of fixed bearing plates included with Structural Steel.

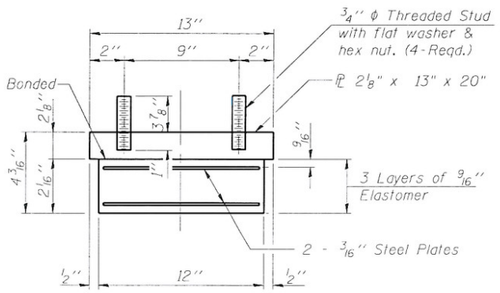


BEARING ASSEMBLY

Note:
Shim plates shall not be placed under Bearing Assembly.

Notes:

Anchor bolts shall be ASTM F1554 all-thread (or an Engineer-approved alternate material) of the grade(s) and diameter(s) specified. ASTM A307 Grade C anchor bolts may be used in lieu of ASTM F1554 Grade 36 (Fy=36ksi). The corresponding specified grade of AASHTO M314 anchor bolts may be used in lieu of ASTM F1554.

Anchor bolts at fixed bearings may be either cast in place or installed in holes drilled after the supported member is in place.

Anchor bolts for side retainers may be cast in place or installed in holes drilled before or after members are in place.

Drilled and set anchor bolts shall be installed according to Article 521.06 of the Standard Specifications.

Side retainers and other steel members required for the bearing assembly shall be included in the cost of Elastomeric Bearing Assembly, Type I.

Two ⅛ in. adjusting shims shall be provided for each bearing in addition to all other plates or shims and placed as shown on bearing details.

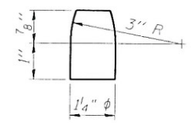


PINTLE

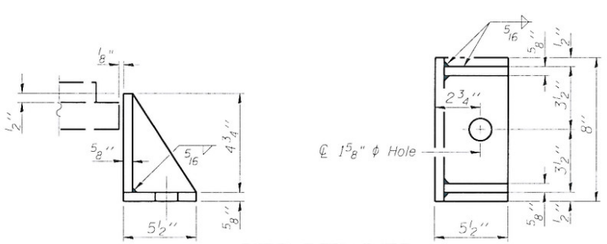


SIDE RETAINER

Equivalent rolled angle with stiffeners will be allowed in lieu of welded plates.

BILL OF MATERIAL

| Item | Unit | Total |
|---|---|---|
| Elastomeric Bearing Assembly Type I | Each | 12 |
| Anchor Bolts, 1" | Each | 24 |
| Anchor Bolts, 1½" | Each | 24 |

| | |
|---|---|
| DESIGNED | JLG |
| CHECKED | JSP |
| DRAWN | UJ |
| CHECKED | JLG |

HR
HURST-ROSCHE ENGINEERS, INC.
PROFESSIONAL DESIGN NUMBER 184-000290

BEARING DETAILS
STRUCTURE NO. 010-0283

| SHEET NO. 16 | F.A.P. RTE. | SECTION | COUNTY | TOTAL SHEETS | SHEET NO. |
|---|---|---|---|---|---|
| 24 SHEETS | 709 | (105BR)BR | CHAMPAIGN | 55 | 28 |
| | SN 010-0283 | | CONTRACT NO. 70427 | | |
| | FED. ROAD DIST. NO. 5 ILLINOIS FED. AID PROJECT | | | | |

D-95-013-97

...\0100283-70427-016-bearing details.dgn 12/16/2009 7:37:24 AM

STATE OF ILLINOIS
DEPARTMENT OF TRANSPORTATION

① 23 Stage I
23 Stage II

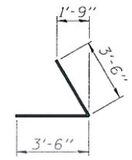


BAR $h_{21}$(E)

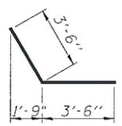


BAR $h_{22}$(E)

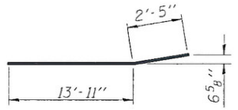


BAR $h_{24}$(E)

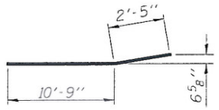


BAR $h_{26}$(E)

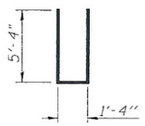


BAR $n_{20}$(E)

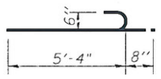


BAR $n_{21}$(E)

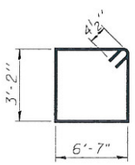


BARS $s_{23}$(E)

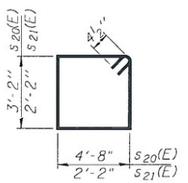


BARS $s_{20}$(E) & $s_{21}$(E)

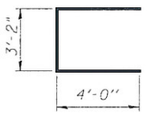


BAR $s_{22}$(E)

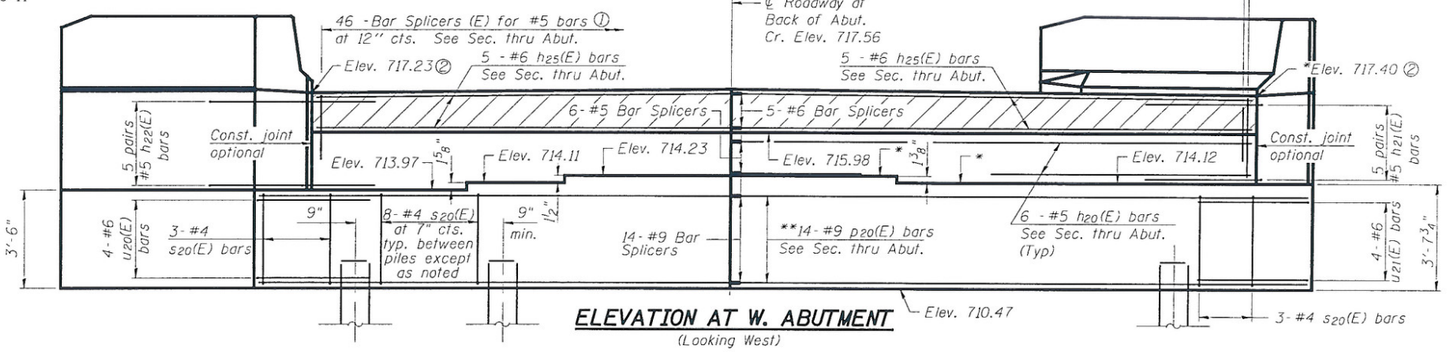


ELEVATION AT W. ABUTMENT
(Looking West)

② Prior to Grinding
*Fill ℄ to be provided at bearings
1" ℄ for Beam 2
3/4" ℄ for Beam 3

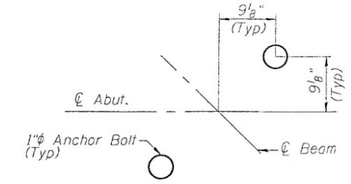


ANCHOR BOLT LOCATION DETAIL

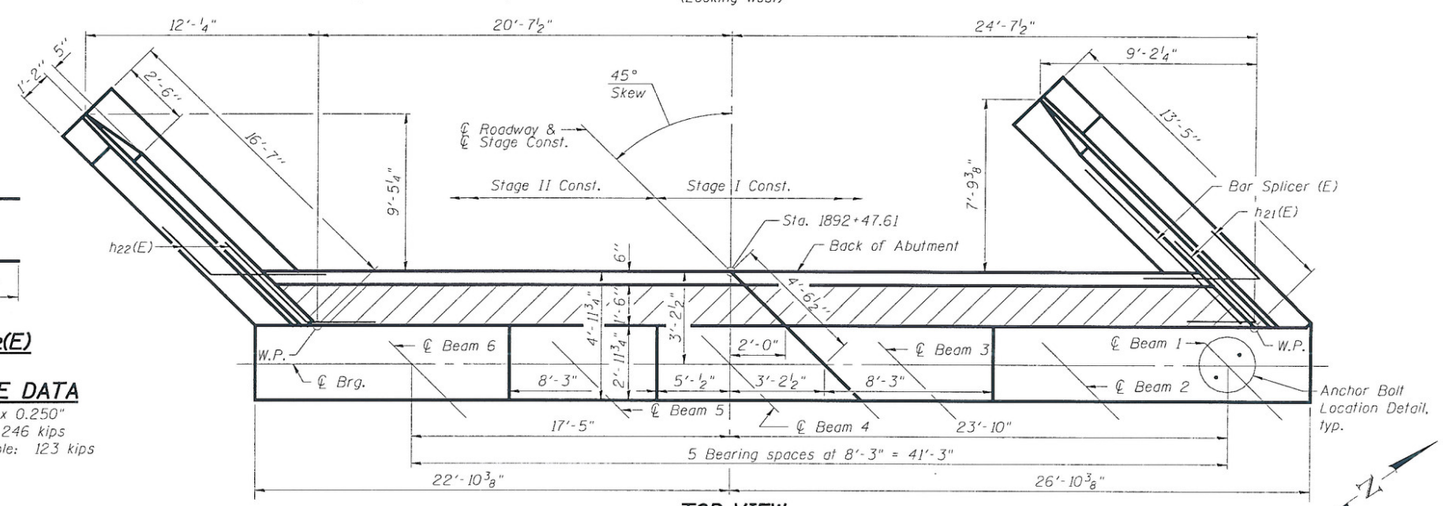


TOP VIEW

ABUTMENT BILL OF MATERIAL

| Bar | No. | Size | Length | Shape |
|---|---|---|---|---|
| $h_{20}$(E) | 12 | #5 | 22'-5" | |
| $h_{21}$(E) | 10 | #5 | 7'-0" | |
| $h_{22}$(E) | 10 | #5 | 7'-0" | |
| $h_{23}$(E) | 16 | #4 | 14'-8" | |
| $h_{24}$(E) | 6 | #4 | 16'-4" | |
| $h_{25}$(E) | 10 | #6 | 22'-5" | |
| $h_{26}$(E) | 6 | #4 | 13'-2" | |
| $h_{27}$(E) | 2 | #4 | 15'-8" | |
| $h_{28}$(E) | 2 | #4 | 13'-8" | |
| | | | | |
| $n_{20}$(E) | 26 | #6 | 12'-0" | |
| $n_{21}$(E) | 12 | #6 | 6'-0" | |
| | | | | |
| ** $p_{20}$(E) | 14 | #9 | 49'-0" | |
| $p_{21}$(E) | 12 | #7 | 14'-8" | |
| | | | | |
| $s_{20}$(E) | 62 | #4 | 16'-5" | |
| $s_{21}$(E) | 32 | #4 | 9'-5" | |
| $s_{22}$(E) | 6 | #4 | 11'-2" | |
| $s_{23}$(E) | 2 | #4 | 20'-3" | |
| | | | | |
| $u_{20}$(E) | 4 | #6 | 11'-5" | |
| $u_{21}$(E) | 4 | #6 | 8'-0" | |
| | | | | |
| $v_{20}$(E) | 46 | #4 | 2'-7" | |
| $v_{21}$(E) | 46 | #4 | 3'-2" | |
| $v_{22}$(E) | 32 | #6 | 6'-0" | |
| $v_{23}$(E) | 6 | #6 | 6'-0" | |
| $v_{24}$(E) | 26 | #6 | 6'-1" | |
| $v_{25}$(E) | 46 | #4 | 2'-10" | |
| $v_{26}$(E) | 46 | #4 | 4'-4" | |
| | | | | |
| Structure Excavation | | | Cu. Yd. | 180 |
| Concrete Structures | | | Cu. Yd. | 58.3 |
| Reinforcement Bars, Epoxy Coated | | | Pound | 6,400 |
| Furnishing Metal Shell Piles, 12" x 0.250" | | | Foot | 264 |
| Driving Piles | | | Foot | 264 |
| Pile Shoes | | | Each | 11 |

**Order $p_{20}$(E) bars full length. Cut to fit skew and use remainder of bars in opposite side.
For details of Bar Splicers, see sheet 22 of 24.

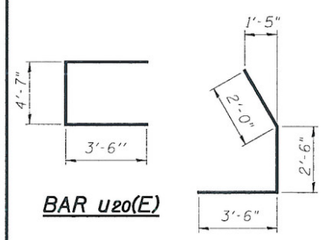


BAR $u_{20}$(E)

BAR $u_{21}$(E)

WEST ABUT. PILE DATA
Type: Metal Shell Pile 12" x 0.250"
Nominal Required Bearing: 246 kips
Factored Resistance Available: 123 kips
Est. Length: 24'
No. Production Piles: 11
No. Test Piles: 0

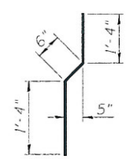


BAR $v_{21}$(E)

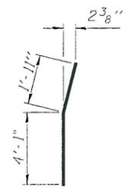


BAR $v_{23}$(E)

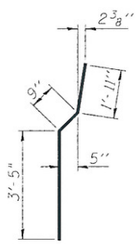


BAR $v_{24}$(E)

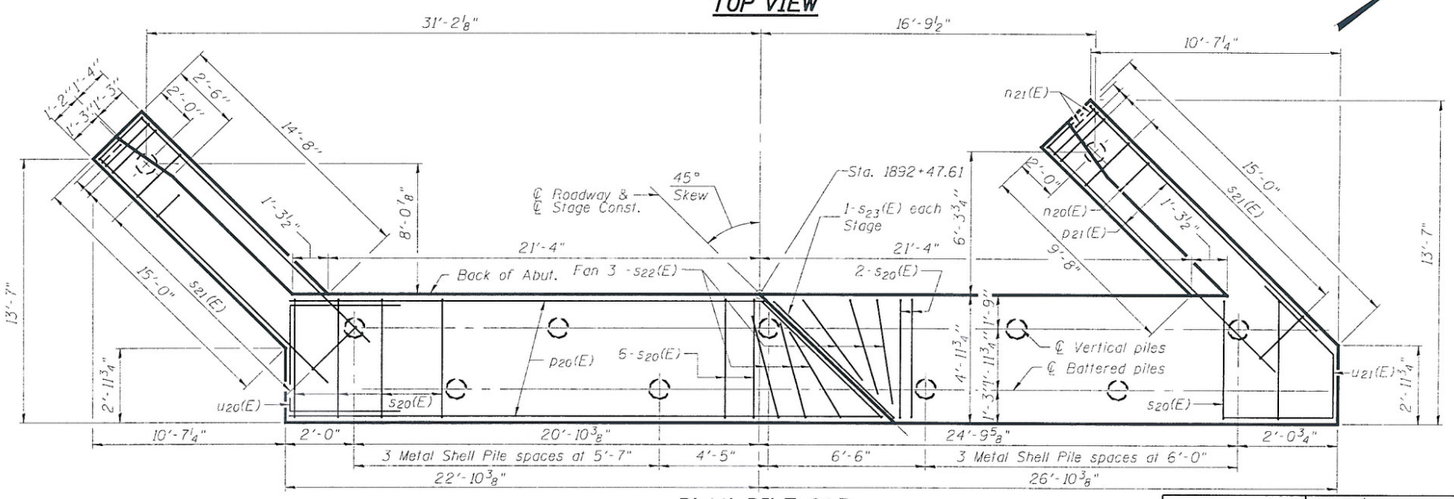


PLAN-PILE CAP

| | |
|---|---|
| DESIGNED | JLG |
| CHECKED | JSP |
| DRAWN | UJ |
| CHECKED | JLG |

HR
HURST-ROSCHE ENGINEERS, INC.
PROFESSIONAL DESIGN NUMBER: 184-000298

WEST ABUTMENT
STRUCTURE NO. 010-0283

| SHEET NO. 17 | F.A.P. RTE. | SECTION | COUNTY | TOTAL SHEETS | SHEET NO. |
|---|---|---|---|---|---|
| 24 SHEETS | 709 | (105BR)BR | CHAMPAIGN | 55 | 29 |
| | SN 010-0283 | | CONTRACT NO. 70427 | | |
| | FED. ROAD DIST. NO. 5 ILLINOIS FED. AID PROJECT | | | | |

D-95-013-97

...\0100283-70427-017-west abutment.dgn 12/17/2009 10:46:23 AM

STATE OF ILLINOIS
DEPARTMENT OF TRANSPORTATION

① 23 Stage I
23 Stage II

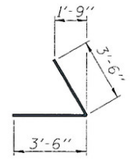


BAR $h_{21}(E)$

BAR $h_{22}(E)$

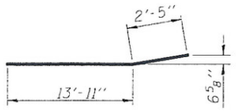


BAR $h_{24}(E)$

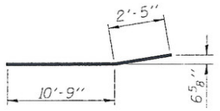


BAR $h_{26}(E)$

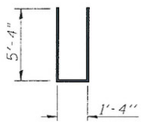


BAR $n_{20}(E)$

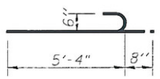


BAR $n_{21}(E)$

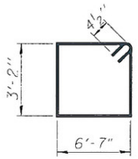


BARS $s_{23}(E)$

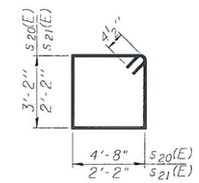


BARS $s_{20}(E)$ & $s_{21}(E)$

BAR $s_{22}(E)$

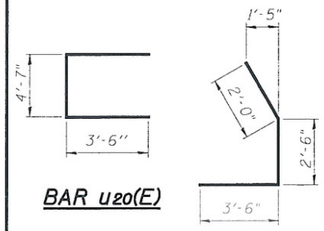


BAR $u_{20}(E)$

BAR $u_{21}(E)$

## EAST ABUT. PILE DATA

Type: Metal Shell Pile 12" x 0.250"
Nominal Required Bearing: 306 kips
Factored Resistance Available: 153 kips
Est. Length: 24'
No. Production Piles: 11
No. Test Piles: 0

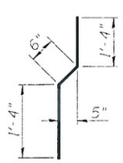


BAR $v_{21}(E)$

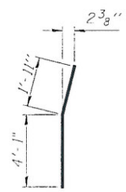


BAR $v_{23}(E)$

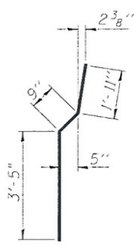


BAR $v_{24}(E)$

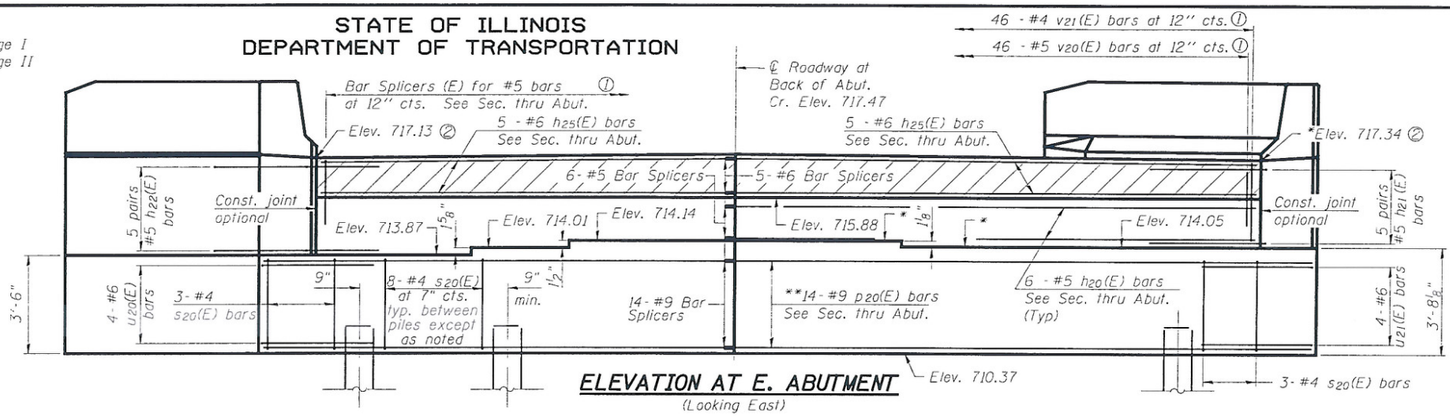


ELEVATION AT E. ABUTMENT
(Looking East)

② Prior to Grinding
*Fill ℙ to be provided at bearings
1" ℙ for Beam 2
3/4" ℙ for Beam 3

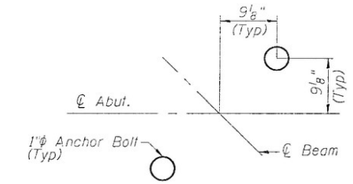


ANCHOR BOLT LOCATION DETAIL

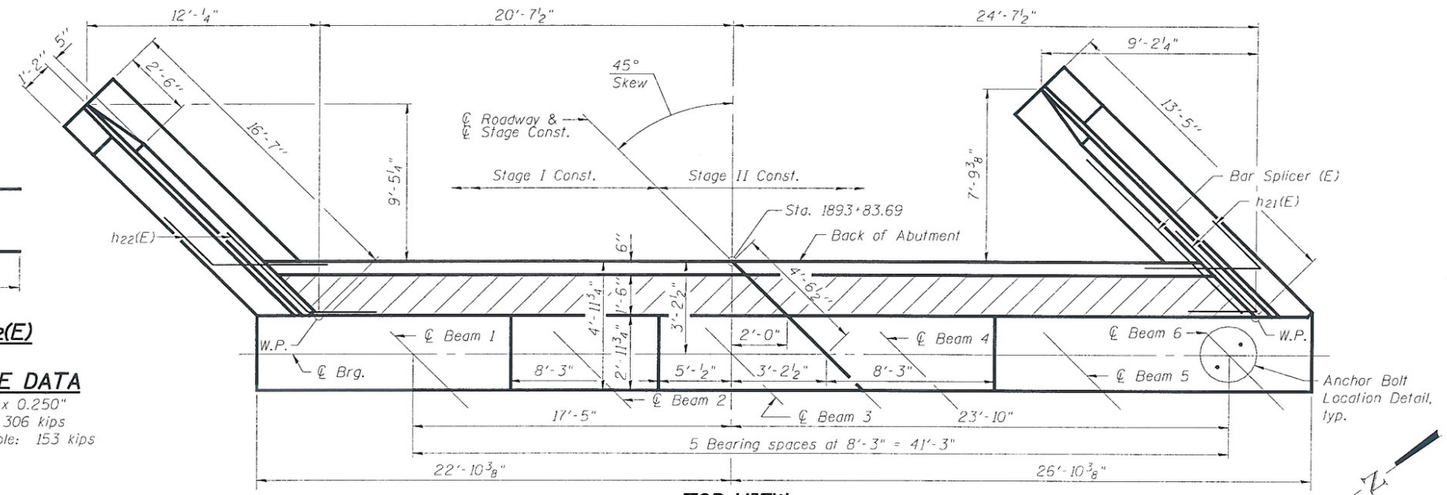


TOP VIEW

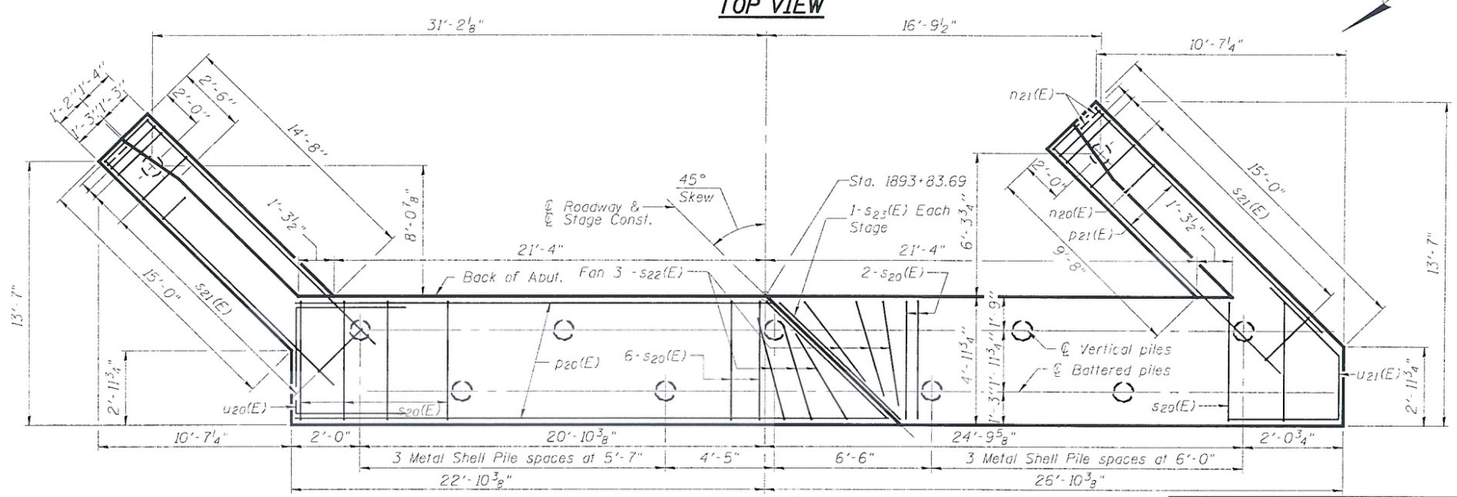


PLAN-PILE CAP

## ABUTMENT BILL OF MATERIAL

| Bar | No. | Size | Length | Shape |
|---|---|---|---|---|
| $h_{20}(E)$ | 12 | #5 | 22'-5" | |
| $h_{21}(E)$ | 10 | #5 | 7'-0" | |
| $h_{22}(E)$ | 10 | #5 | 7'-0" | |
| $h_{23}(E)$ | 16 | #4 | 14'-8" | |
| $h_{24}(E)$ | 6 | #4 | 16'-4" | |
| $h_{25}(E)$ | 10 | #6 | 22'-5" | |
| $h_{26}(E)$ | 6 | #4 | 13'-2" | |
| $h_{27}(E)$ | 2 | #4 | 15'-8" | |
| $h_{28}(E)$ | 2 | #4 | 13'-8" | |
| $n_{20}(E)$ | 26 | #6 | 12'-0" | |
| $n_{21}(E)$ | 12 | #6 | 6'-0" | |
| ** $p_{20}(E)$ | 14 | #9 | 49'-0" | |
| $p_{21}(E)$ | 12 | #7 | 14'-8" | |
| $s_{20}(E)$ | 62 | #4 | 16'-5" | |
| $s_{21}(E)$ | 32 | #4 | 9'-5" | |
| $s_{22}(E)$ | 8 | #4 | 11'-2" | |
| $s_{20}(E)$ | 62 | #4 | 16'-5" | |
| $u_{20}(E)$ | 4 | #6 | 11'-5" | |
| $u_{21}(E)$ | 4 | #6 | 8'-0" | |
| $v_{20}(E)$ | 46 | #4 | 2'-7" | |
| $v_{21}(E)$ | 46 | #4 | 3'-2" | |
| $v_{22}(E)$ | 32 | #6 | 6'-0" | |
| $v_{23}(E)$ | 6 | #6 | 6'-0" | |
| $v_{24}(E)$ | 26 | #6 | 6'-1" | |
| $v_{25}(E)$ | 46 | #4 | 2'-10" | |
| $v_{26}(E)$ | 46 | #4 | 4'-4" | |

| | | |
|---|---|---|
| Structure Excavation | Cu. Yd. | 180 |
| Concrete Structures | Cu. Yd. | 58.3 |
| Reinforcement Bars, Epoxy Coated | Pound | 6,400 |
| Furnishing Metal Shell Piles, 12" x 0.250" | Foot | 264 |
| Driving Piles | Foot | 264 |
| Pile Shoes | Each | 11 |

**Order $p_{20}(E)$ bars full length. Cut to fit skew and use remainder of bars in opposite side.
For details of Bar Splicers, see sheet 22 of 24.

| | |
|---|---|
| DESIGNED | JLG |
| CHECKED | JSP |
| DRAWN | UJ |
| CHECKED | JLG |

HR
HURST-ROSCHE ENGINEERS, INC.
PROFESSIONAL DESIGN NUMBER: 184-000298

EAST ABUTMENT
STRUCTURE NO. 010-0283

| SHEET NO. 18 | F.A.P. RTE. | SECTION | COUNTY | TOTAL SHEETS | SHEET NO. |
|---|---|---|---|---|---|
| 24 SHEETS | 709 | (105BR)BR | CHAMPAIGN | 55 | 30 |
| | SN 010-0283 | | CONTRACT NO. 70427 | | |
| | FED. ROAD DIST. NO. 5 ILLINOIS FED. AID PROJECT | | | | |

D-95-013-97

...\0100283-70427-018-east abutment.dgn 12/17/2009 10:46:23 AM

STATE OF ILLINOIS
DEPARTMENT OF TRANSPORTATION

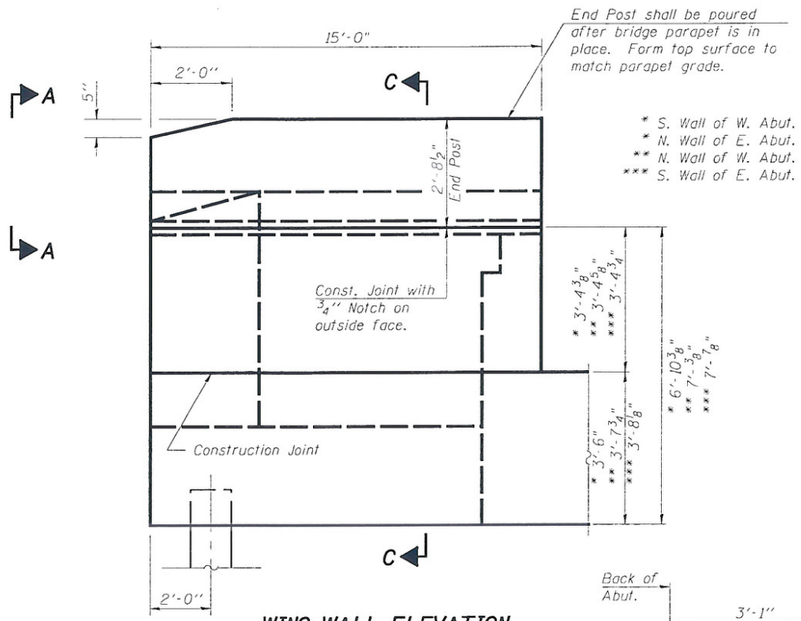


WING WALL ELEVATION
Showing Dimensions

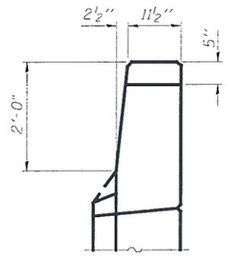


VIEW A-A

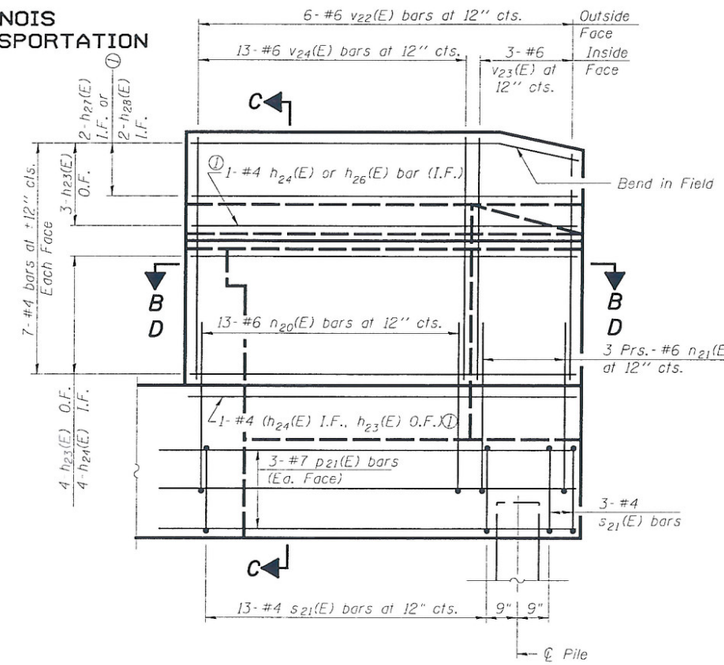


WING WALL ELEVATION
Showing Reinforcement

① Notes:
$h_{24}(E)$ and $h_{27}(E)$ shall be used on the North Parapet of the West Abutment and the South Parapet of the East Abutment.
$h_{26}(E)$ and $h_{28}(E)$ shall be used on the South Parapet of the West Abutment and the North Parapet of the East Abutment.

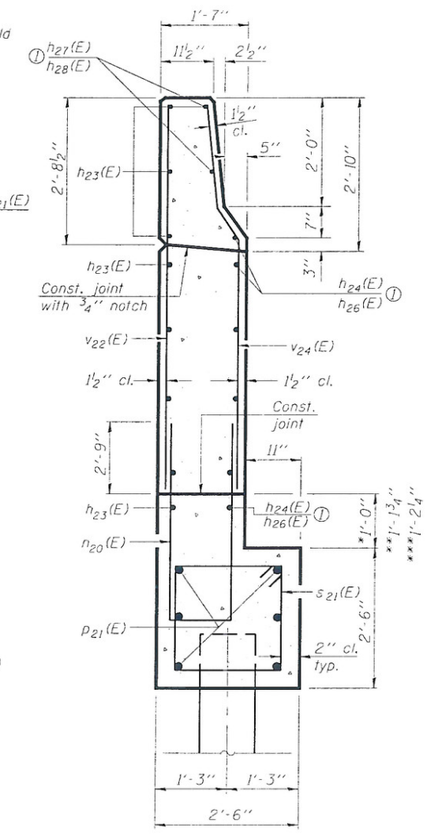


SECTION C-C

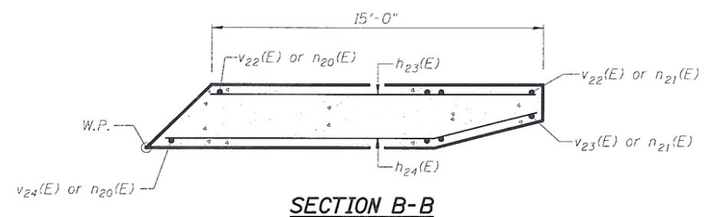


SECTION B-B
South Parapet of West Abutment
North Parapet of East Abutment

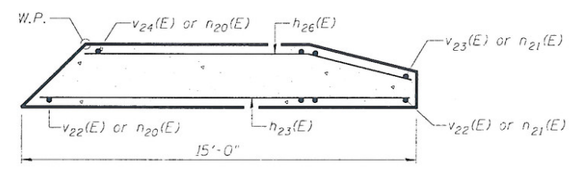


SECTION D-D
South Parapet of East Abutment
North Parapet of West Abutment

* S. Wall of W. Abut.
* N. Wall of E. Abut.
** N. Wall of W. Abut.
*** S. Wall of E. Abut.

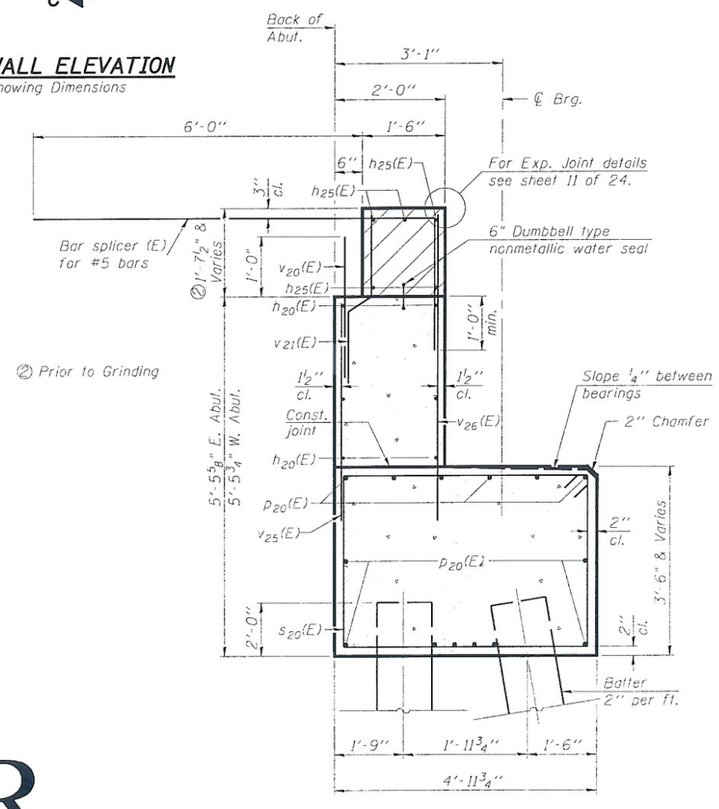


② Prior to Grinding

SEC. THRU ABUT.
(@ Rt L's)

Notes:
Hatched area to be poured after superstructure false work has been removed. Quantity of concrete included with Concrete Superstructure.
Space reinforcement in cap to miss anchor bolts.
Pour steps monolithically with cap.
Quantity of concrete in end post included with Concrete Superstructure on sheet 10 of 24.
For Concrete Encasement details, see sheet 21 of 24.
Align bent bar splices to be parallel to approach slab reinforcement.
Concrete sealer to be applied to backwalls, bridge seats, and front face of pile caps.

ABUTMENT DETAILS
STRUCTURE NO. 010-0283

| | |
|---|---|
| DESIGNED | JLG |
| CHECKED | JSP |
| DRAWN | UJ |
| CHECKED | JLG |

HR
HURST-ROSCHE ENGINEERS, INC.
PROFESSIONAL DESIGN NUMBER: 184-000298

| SHEET NO. 19 | F.A.P. RTE. | SECTION | COUNTY | TOTAL SHEETS | SHEET NO. |
|---|---|---|---|---|---|
| 24 SHEETS | 709 | (105BR)BR | CHAMPAIGN | 55 | 31 |
| | SN 010-0283 | | CONTRACT NO. 70427 | | |
| | FED. ROAD DIST. NO. 5 ILLINOIS FED. AID PROJECT | | | | |

D-95-013-97

...\0100283-70427-019-abutment details.dgn 12/17/2009 10:46:25 AM

Notes:
Space reinforcement in cap to miss anchor bolts.
Pour steps monolithically with cap.
For details of piles, see sheet 21 of 24.

STATE OF ILLINOIS
DEPARTMENT OF TRANSPORTATION

## PIER 1 PILE DATA

Type: 14" x 0.312"
Nominal Required Bearing: 509 kips
Factored Resistance Available: 250 kips
Est. Length: 24'
No. Production Piles: 9
No. Test Piles: 1

## PIER 2 PILE DATA

Type: 14" x 0.312"
Nominal Required Bearing: 420 kips
Factored Resistance Available: 183 kips
Est. Length: 24'
No. Production Piles: 9
No. Test Piles: 1

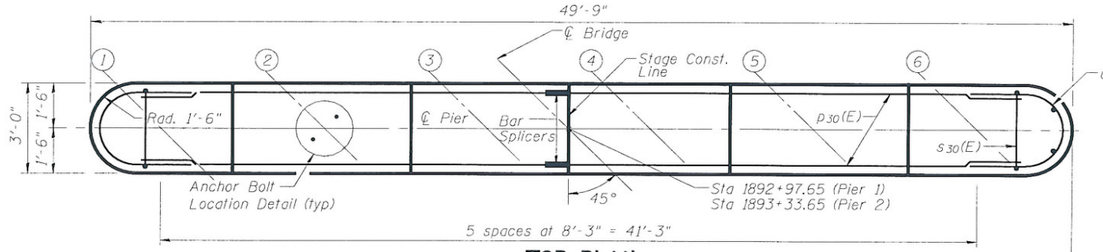


## TOP PLAN

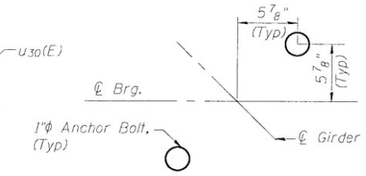


## ANCHOR BOLT LOCATION DETAIL

## BARS s31 (E)

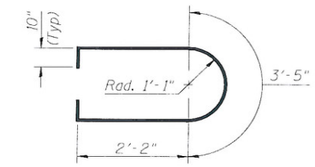


## BARS u32(E)

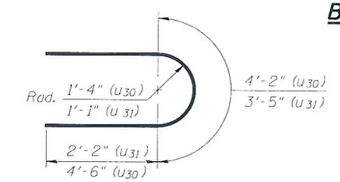


## BARS u30(E) & u31(E)

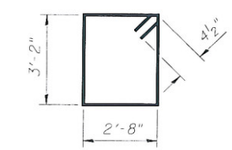


## BAR s30(E)

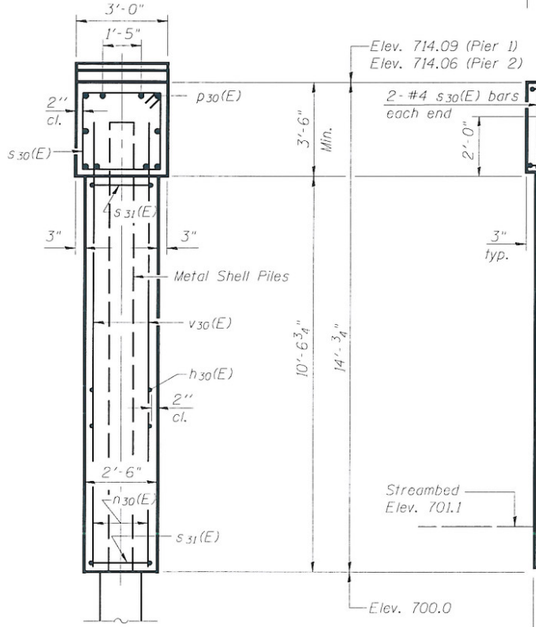


## END VIEW

*Alternate Direction of 90° Bend

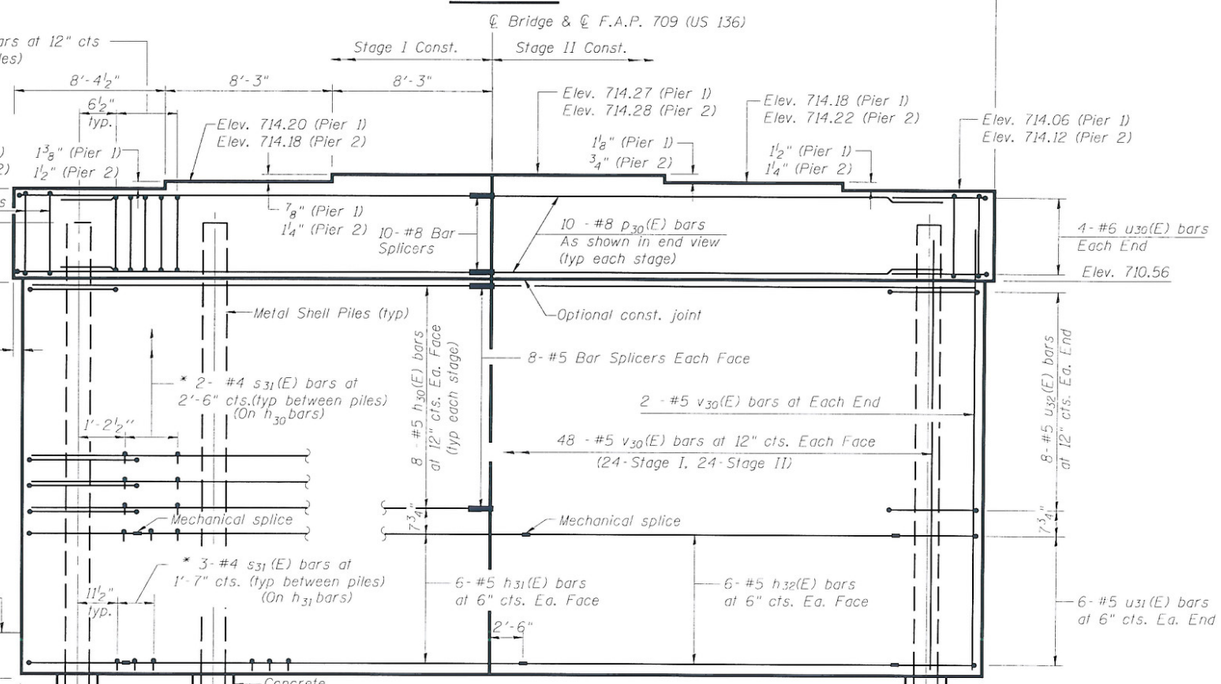


## ELEVATION
(Looking East)

## BILL OF MATERIAL
(Two Piers)

| Bar | No. | Size | Length | Shape |
|---|---|---|---|---|
| h30(E) | 64 | #5 | 23'-2" | |
| h31(E) | 24 | #5 | 23'-8" | |
| h32(E) | 24 | #5 | 18'-8" | |
| p30(E) | 40 | #8 | 23'-2" | |
| s30(E) | 98 | #4 | 12'-5" | |
| s31(E) | 576 | #4 | 3'-2" | |
| u30(E) | 16 | #6 | 13'-2" | |
| u31(E) | 24 | #5 | 7'-9" | |
| u32(E) | 32 | #5 | 9'-5" | |
| v30(E) | 200 | #5 | 12'-6" | |
| Structure Excavation | | Cu. Yd. | 26 | |
| Concrete Structures | | Cu. Yd. | 135.8 | |
| Concrete Encasement | | Cu. Yd. | 10.9 | |
| Reinforcement Bars, Epoxy Coated | | Pound | 10,560 | |
| Furnishing Metal Shell Piles 14" x 0.312" | | Foot | 432 | |
| Driving Piles | | Foot | 432 | |
| Test Pile Metal Shells | | Each | 2 | |
| Mechanical Splicers | | Each | 12 | |
| Pile Shoes | | Each | 18 | |

Notes: Bill of Material is for two Piers.
Underwater Structure Protection to be provided at each Pier.

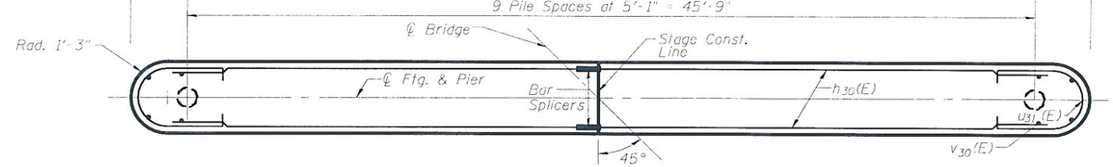


## FOOTING PLAN

## PIERS
## STRUCTURE NO. 010-0283

| | | | | | |
|---|---|---|---|---|---|
| SHEET NO. 20 | F.A.P. RTE. | SECTION | COUNTY | TOTAL SHEETS | SHEET NO. |
| | 709 | (105BR)BR | CHAMPAIGN | 55 | 32 |
| 24 SHEETS | SN 010-0283 | | CONTRACT NO. 70427 | | |
| | FED. ROAD DIST. NO. 5 ILLINOIS FED. AID PROJECT | | | | |

| | |
|---|---|
| DESIGNED | JLG |
| CHECKED | JSP |
| DRAWN | UJ |
| CHECKED | JLG |

HR
HURST-ROSCHE ENGINEERS, INC.
PROFESSIONAL DESIGN NUMBER: 184-000298

D-95-013-97

...\dgn\0100283-70427-020-pier.dgn 12/16/2009 7:37:28 AM

STATE OF ILLINOIS
DEPARTMENT OF TRANSPORTATION

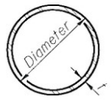


## METAL SHELL PILE TABLE

| Designation and outside diameter | Wall thickness t | Weight per foot (Lbs./ft.) | Inside volume (yd.$^3$/ft.) |
|---|---|---|---|
| PP12 | 0.179" | 22.60 | 0.0274 |
| PP12 | 0.250" | 31.37 | 0.0267 |
| PP14 | 0.250" | 36.71 | 0.0368 |
| PP14 | 0.312" | 45.61 | 0.0361 |

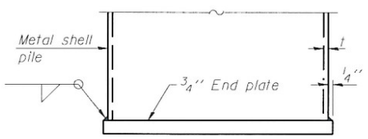


## END PLATE ATTACHMENT

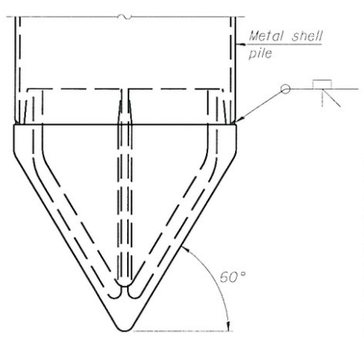


Note A:
When called for on the plans, the Contractor shall furnish metal shell pile shoes consisting of a single piece conical pile point as shown. The pile shoes shall be cast in one piece steel according to either ASTM A 148 Grade 90-60 or AASHTO M 103 Grade 65-35 and shall provide full bearing over the full circumference of the metal shell pile. The pile shoe shall have tapered leads to assure proper alignment and fitting and shall be secured to the pile with a circumferential weld.

## METAL SHELL PILE SHOE ATTACHMENT

(See Note A)

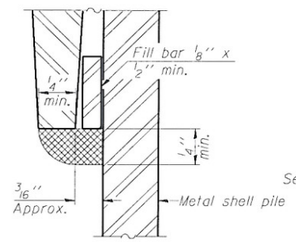


## DETAIL A

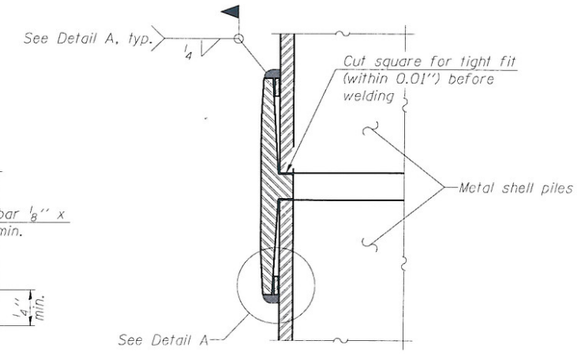


Notes:
The 1/8" x 1/2" min. fill bar may be constructed of 2 bars with a 1/8" max. gap between them.
Pile segments shall be driven to solid contact with splicer before welding.

## WELDED COMMERCIAL SPLICE

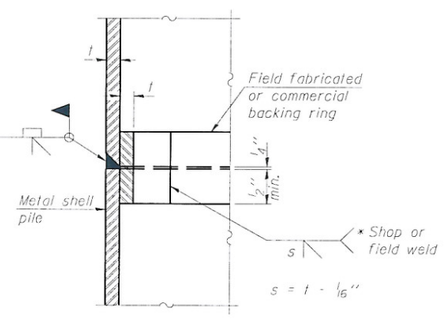


## COMPLETE PENETRATION WELD SPLICE

* Field fabricated backing ring may be made from pile shell by removing segment to allow reducing circumference and vertically rejoin with partial joint penetration weld.

Note:
The metal shell piles shall be according to ASTM A 252 Grade 3.

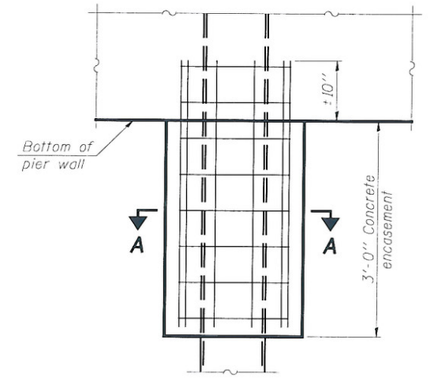


## ELEVATION

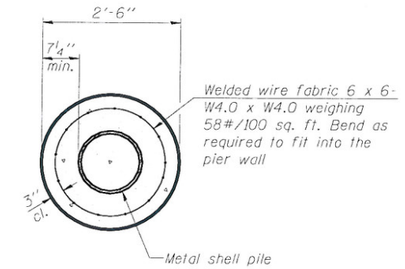


## SECTION A-A

Note:
Forms for encasement may be omitted when soil conditions permit.

## CONCRETE ENCASEMENT AT PIERS

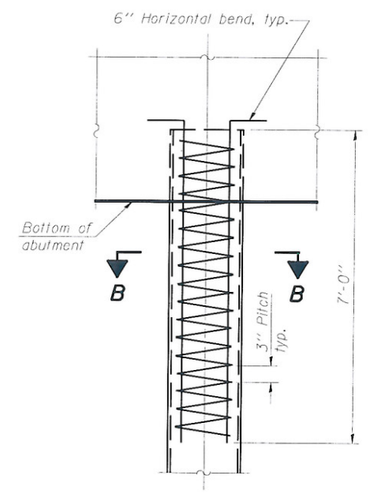


## ELEVATION

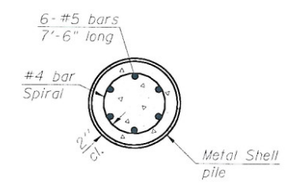


## SECTION B-B

## METAL SHELL REINFORCEMENT AT ABUTMENTS

## METAL SHELL PILE DETAILS
## STRUCTURE NO. 010-0283

| | | | | | |
|---|---|---|---|---|---|
| SHEET NO. 21 | F.A.P. RTE. | SECTION | COUNTY | TOTAL SHEETS | SHEET NO. |
| | 709 | (105BR)BR | CHAMPAIGN | 55 | 33 |
| 24 SHEETS | SN 010-0283 | | CONTRACT NO. 70427 | | |
| | FED. ROAD DIST. NO. 5 ILLINOIS FED. AID PROJECT | | | | |

| | |
|---|---|
| DESIGNED | JLG |
| CHECKED | JSP |
| DRAWN | UJ |
| CHECKED | JLG |

HR HURST-ROSCHE ENGINEERS, INC.
PROFESSIONAL DESIGN NUMBER: 184-000298

F-MS 10-1-08

D-95-013-97

...\0100283-70427-021-metal shell details.dgn 12/16/2009 7:37:30 AM

STATE OF ILLINOIS
DEPARTMENT OF TRANSPORTATION

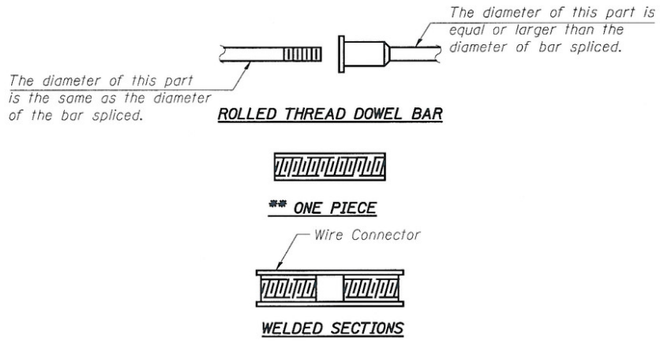


## BAR SPLICER ASSEMBLY ALTERNATIVES

**Heavy Hex Nuts conforming to ASTM A 563, Grade C, D or DH may be used.

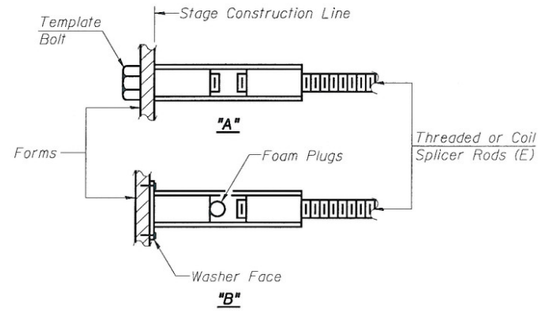


## INSTALLATION AND SETTING METHODS

"A" : Set bar splicer assembly by means of a template bolt.
"B" : Set bar splicer assembly by nailing to wood forms or cementing to steel forms.
(E) : Indicates epoxy coating.

## NOTES

Bar splicer assemblies shall be of an approved type and shall develop in tension at least 125 percent of the yield strength of the lapped reinforcement bars.

Splicer rods shall be of minimum 60 ksi yield strength, threaded or coiled full length.

All reinforcement bars shall be lapped and tied to the splicer rods or dowel bars.

Bar splicer assemblies shall be epoxy coated according to the requirements for reinforcement bars.

Other systems of similar design may be submitted to the Engineer for approval. Approval shall be based on certified test results from an approved testing laboratory that the proposed bar splicer assembly satisfies the following requirements:

① Minimum Capacity (Tension in kips) = $1.25 \times f_y \times A_t$

② Minimum *Pull-out Strength (Tension in kips) = $0.66 \times f_y \times A_t$

Where $f_y$ = Yield strength of lapped reinforcement bars in ksi.
$A_t$ = Tensile stress area of lapped reinforcement bars.
* = 28 day concrete

| BAR SPLICER ASSEMBLIES | | | | |
|---|---|---|---|---|
| Bar Size to be Spliced | Splicer Rod or Dowel Bar Length (Basic Lap) | Splicer Rod or Dowel Bar Length (Top Bars Lap) | Strength Requirements | |
| | | | Min. Capacity kips - tension | Min. Pull-Out Strength kips - tension |
| #4 | 1'-8" | 2'-5" | 14.7 | 7.9 |
| #5 | 2'-2" | 3'-0" | 23.0 | 12.3 |
| #6 | 2'-7" | 3'-7" | 33.1 | 17.4 |
| #7 | 3'-5" | 4'-10" | 45.1 | 23.8 |
| #8 | 4'-6" | 6'-4" | 58.9 | 31.3 |
| #9 | 5'-9" | 8'-1" | 75.0 | 39.6 |
| #10 | 7'-3" | 10'-3" | 95.0 | 50.3 |
| #11 | 9'-0" | 12'-7" | 117.4 | 61.8 |

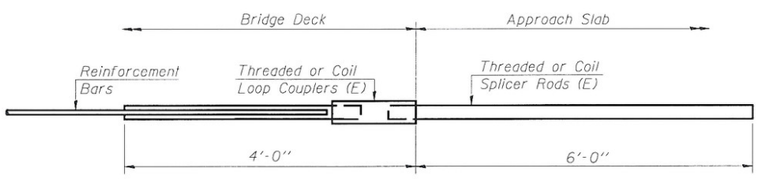


## FOR INTEGRAL OR SEMI-INTEGRAL ABUTMENTS

| Bar Splicer for #5 bar |
|---|
| Min. Capacity = 23.0 kips - tension |
| Min. Pull-out Strength = 12.3 kips - tension |
| No. Required = |

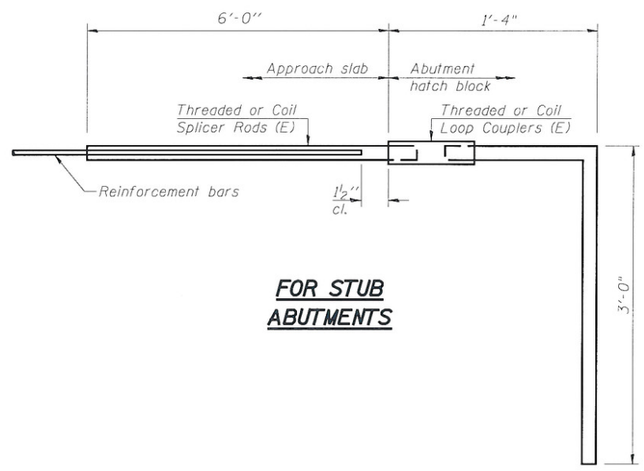


## FOR STUB ABUTMENTS

| Bar Splicer for #5 bar |
|---|
| Min. Capacity = 23.0 kips - tension |
| Min. Pull-out Strength = 12.3 kips - tension |
| No. Required = 92 |

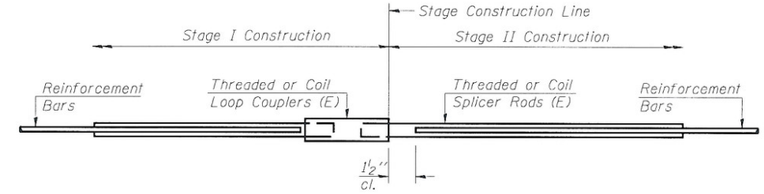


## STANDARD

| Bar Size | No. Assemblies Required | Location |
|---|---|---|
| #5 | 12 | Abuts* |
| #6 | 10 | Abuts* |
| #9 | 28 | Abuts* |
| #5 | 32 | Piers* |
| #8 | 20 | Piers* |
| #5 | 397 | Deck |
| #5 | 142 | Appr. Slab |
| #5 | 80 | Appr. Slab Foot. |

*Top Bar Lap Lengths

## BAR SPLICER ASSEMBLY DETAILS
## STRUCTURE NO. 010-0283

| | |
|---|---|
| DESIGNED | JLG |
| CHECKED | JSP |
| DRAWN | UJ |
| CHECKED | JLG |

HR
HURST-ROSCHE ENGINEERS, INC.
PROFESSIONAL DESIGN NUMBER: 184-000298

| SHEET NO. 22 | F.A.P. RTE. | SECTION | COUNTY | TOTAL SHEETS | SHEET NO. |
|---|---|---|---|---|---|
| 24 SHEETS | 709 | (105BR)BR | CHAMPAIGN | 55 | 34 |
| | SN 010-0283 | | CONTRACT NO. 70427 | | |
| | FED. ROAD DIST. NO. 5 ILLINOIS FED. AID PROJECT | | | | |

10-1-08

D-95-013-97

...\0100283-70427-022-bar splicer assembly details.dgn 1/12/2010 11:23:58 AM

STATE OF ILLINOIS
DEPARTMENT OF TRANSPORTATION

When cantilever forming brackets are used, the work shall be done according to Article 503.06(b) of the Standard Specifications, except as modified below and in the details shown on this sheet.

The finishing machine rails shall be placed on the top flange of the exterior beams.

The beams or girders, supporting cantilever forming brackets, shall be tied together at 4 foot intervals.

For Standard construction, or Stage Construction the Hardwood bracing materials shall be placed as shown between webs of beams in each bay.

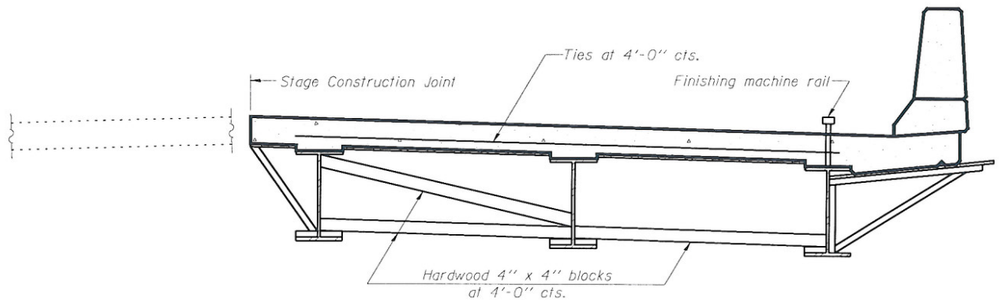


**FORM BRACES FOR STAGE CONSTRUCTION**

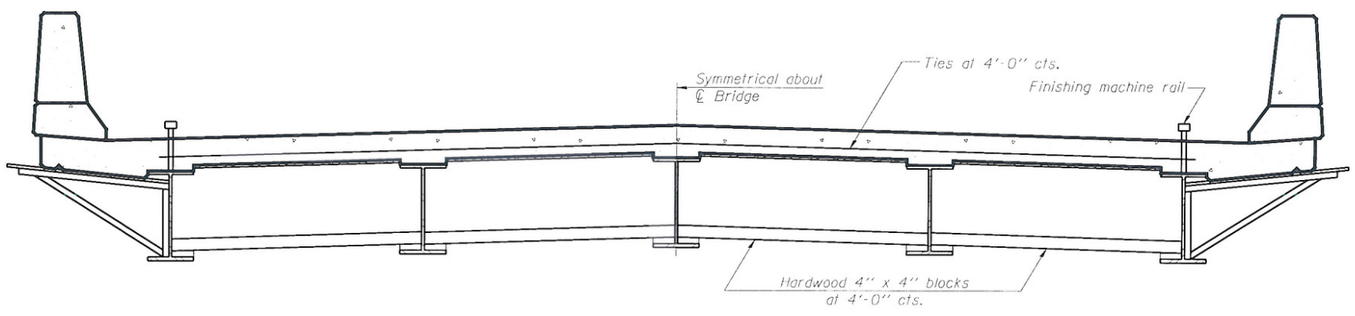


**FORM BRACES FOR STANDARD CONSTRUCTION**

| | |
|---|---|
| DESIGNED | JLG |
| CHECKED | JSP |
| DRAWN | UJ |
| CHECKED | JLG |

HR
HURST-ROSCHE ENGINEERS, INC.
PROFESSIONAL DESIGN NUMBER: 184-000298

**CANTILEVER FORMING BRACKETS FOR SUPERSTRUCTURES WITH W27 BEAMS AND SMALLER STRUCTURE NO. 010-0283**

| SHEET NO. 23 | F.A.P. RTE. | SECTION | COUNTY | TOTAL SHEETS | SHEET NO. |
|---|---|---|---|---|---|
| 24 SHEETS | 709 | (105BR)BR | CHAMPAIGN | 55 | 35 |
| | SN 010-0283 | | CONTRACT NO. 70427 | | |
| | FED. ROAD DIST. NO. 5 ILLINOIS FED. AID PROJECT | | | | |

D-95-013-97

...\0100283-70427-023-cantilever forming brackets.dgn 12/16/2009 7:37:34 AM

STATE OF ILLINOIS
DEPARTMENT OF TRANSPORTATION

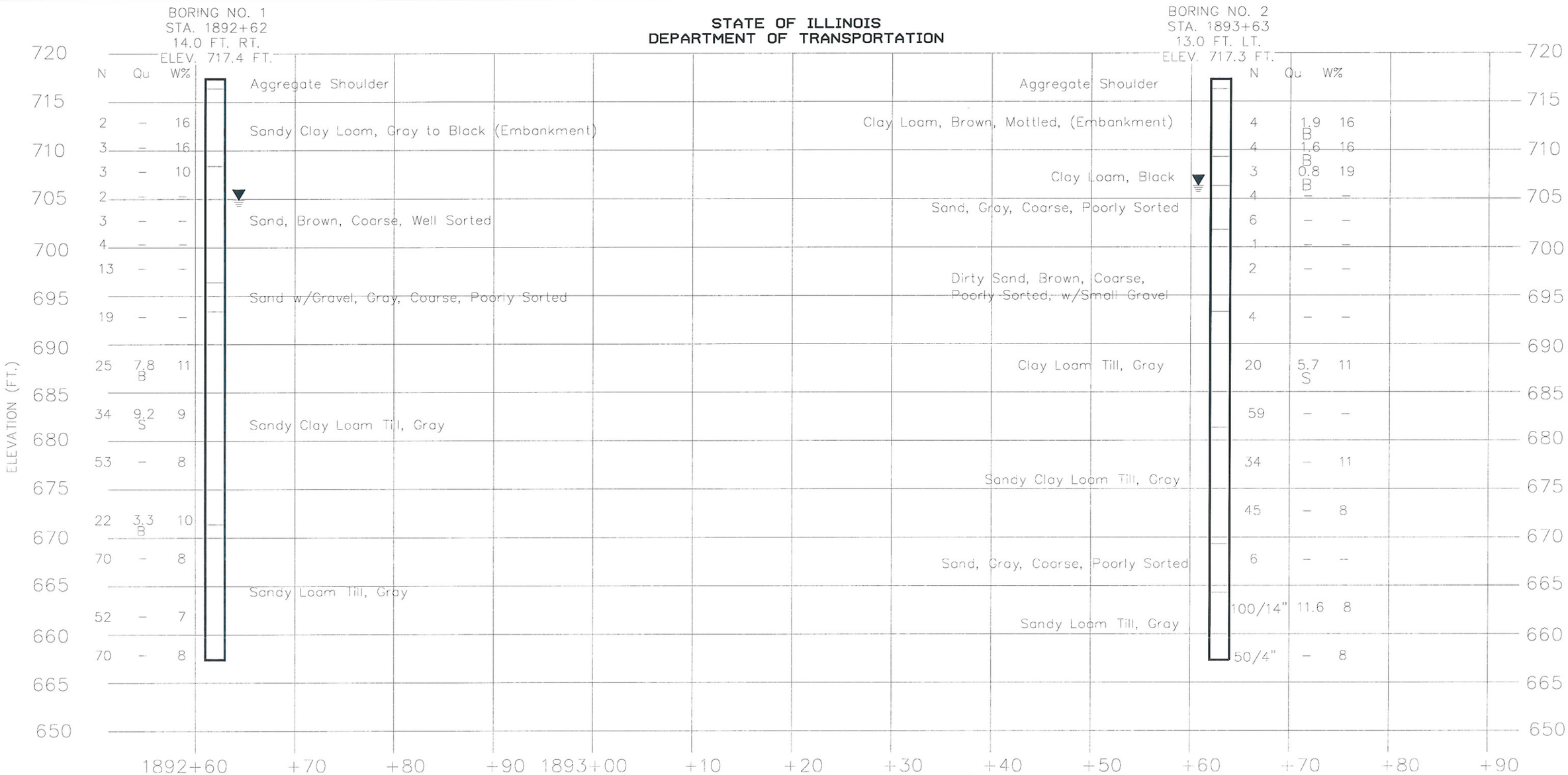


LEGEND

N = SPT N-VALUE (AASHTO T206)

Qu = UNCONFINED COMPRESSIVE STRENGTH IN TONS PER SQ. FT. (tsf)
FAILURE MODE (B=BULGE, S=SHEAR, P=PENETROMETER)

W% = MOISTURE CONTENT PERCENTAGE

▽ GROUNDWATER LEVEL UPON COMPLETION

▼ GROUNDWAYER LEVEL FIRST ENCOUNTERED

NOTE:
SOIL PROFILE IS DIAGRAMMATIC.
REFERENCE BORING LOGS FOR MORE
DETAILED INFORMATION.

**SUBSURFACE DIAGRAM**
**STRUCTURE NO. 010-0283**

| | |
|---|---|
| DESIGNED | JLG |
| CHECKED | JSP |
| DRAWN | CJC |
| CHECKED | JLG |

HR
HURST-ROSCHE ENGINEERS, INC.
PROFESSIONAL DESIGN NUMBER: 184-000298

| SHEET NO. 24 | F.A.P RTE. | SECTION | COUNTY | TOTAL SHEETS | SHEET NO. |
|---|---|---|---|---|---|
| | 709 | (105BR)BR | CHAMPAIGN | 55 | 36 |
| 24 SHEETS | SN 010-0283 | | CONTRACT NO. 70427 | | |
| | FED. ROAD DIST. NO. 5 | ILLINOIS | FED. AID PROJECT | | |

...\0100283-70427-024-boring log.dgn 12/16/2009 7:37:36 AM

# WIDTH RESTRICTION SIGNING DETAILS

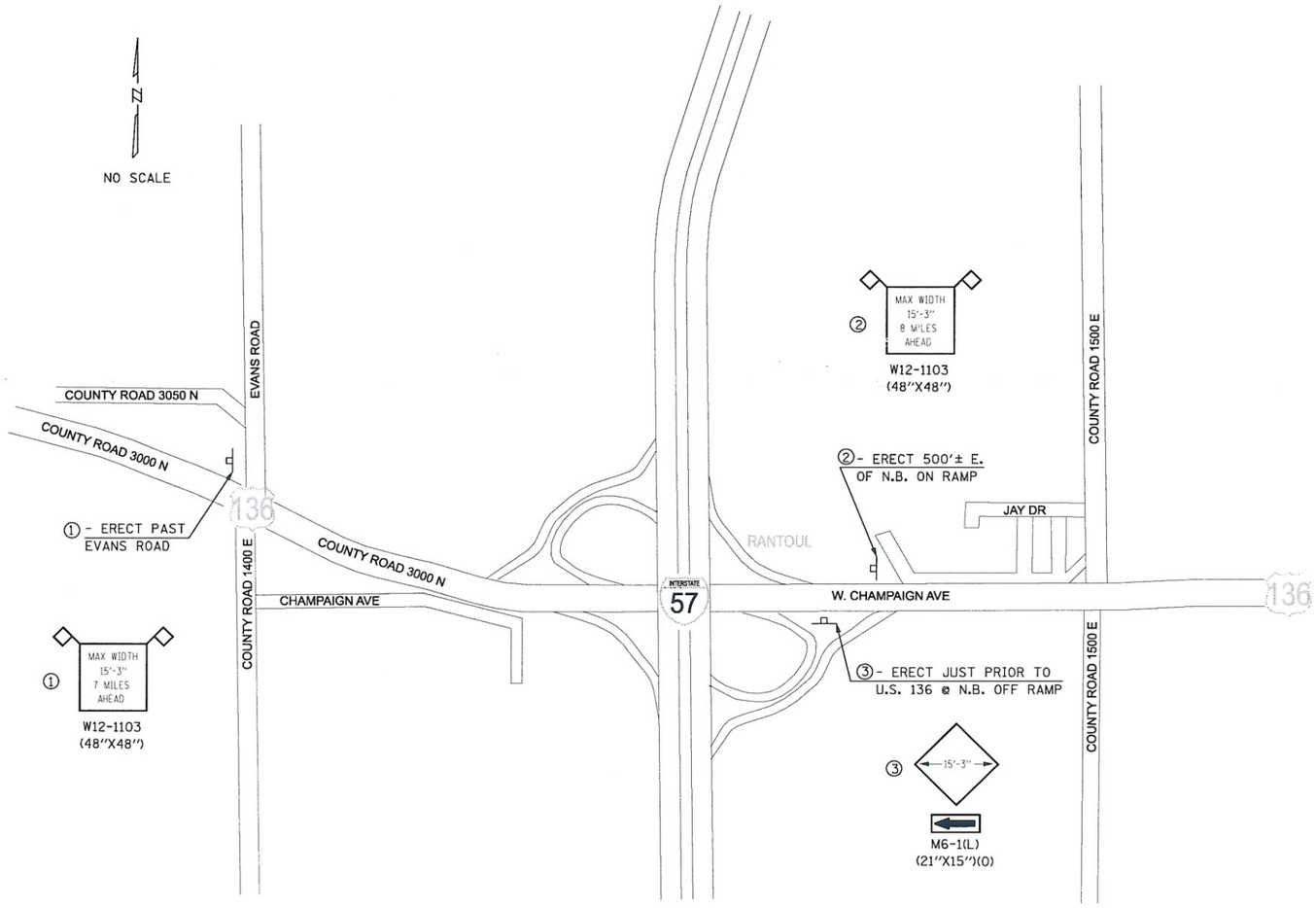


NOTE:
STAGE II SHALL BE POSTED A MAXIMUM WIDTH OF 12'-2".

NOTE:
REFER TO SHEET #44 FOR ADDITIONAL INFORMATION.

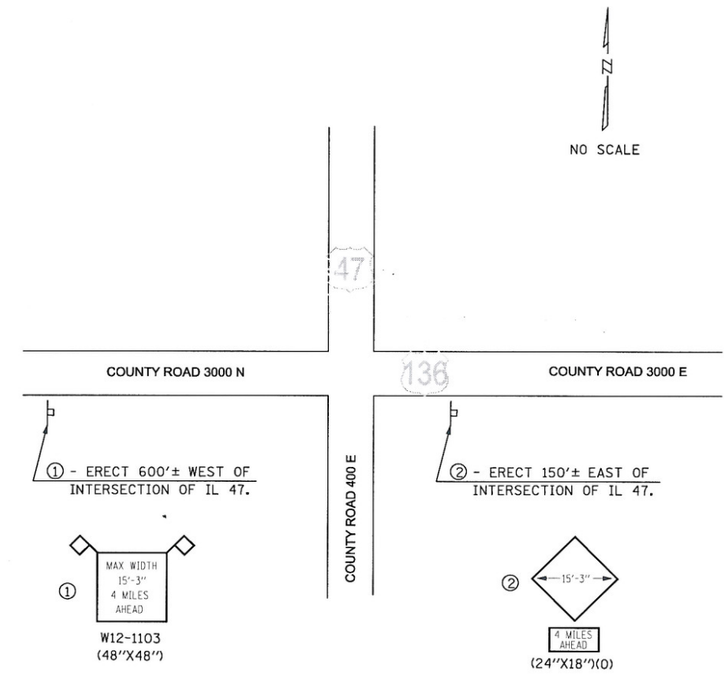


NOTE:
STAGE II SHALL BE POSTED A MAXIMUM WIDTH OF 12'-2".

| PLAN | BY | DATE |
|---|---|---|
| SURVEYED | | |
| PLOTTED | | |
| ALIGNMENT CHECKED | | |
| RT. OF WAY CHECKED | | |
| ADD FILE NAME | | |
| NOTE BOOK NO. | | |

| PROFILE | BY | DATE |
|---|---|---|
| SURVEYED | | |
| PLOTTED | | |
| GRADES CHECKED | | |
| B.M. NOTED | | |
| STRUCTURE NOTATNS CHKD | | |
| NOTE BOOK NO. | | |


HURST-ROSCHE ENGINEERS, INC.
HILLSBORO, ILLINOIS 62049
(217)532-3959 FAX (217)532-3212
HURST-ROSCHE ENGINEERS, INC.


| | | | |
|---|---|---|---|
| FILE NAME = t:\190-1239_wo*1_wildcat\dgn\D570427-sht-signing_detail.dgn | USER NAME = HURST-ROSCHE | DESIGNED - JJC | REVISED - |
| | | DRAWN - UJ | REVISED - |
| | PLOT SCALE = 1002.0036 ' / IN. | CHECKED - MAR | REVISED - |
| | PLOT DATE = 12/16/2009 | DATE - 12-16-09 | REVISED - |

**STATE OF ILLINOIS**
**DEPARTMENT OF TRANSPORTATION**

**WIDTH RESTRICTION SIGNING–LOCATION DETAIL**

SCALE: NONE | SHEET NO. 1 OF 1 SHEETS | STA. | TO STA.

| F.A.P RTE. | SECTION | COUNTY | TOTAL SHEETS | SHEET NO. |
|---|---|---|---|---|
| 709 | (105BR)BR | CHAMPAIGN | 55 | 37 |
| | | CONTRACT NO. 70427 | | |
| FED. ROAD DIST. NO. 5 | ILLINOIS | FED. AID PROJECT | | |

...\D570427-sht-signing_detail.dgn 12/16/2009 7:38:58 AM

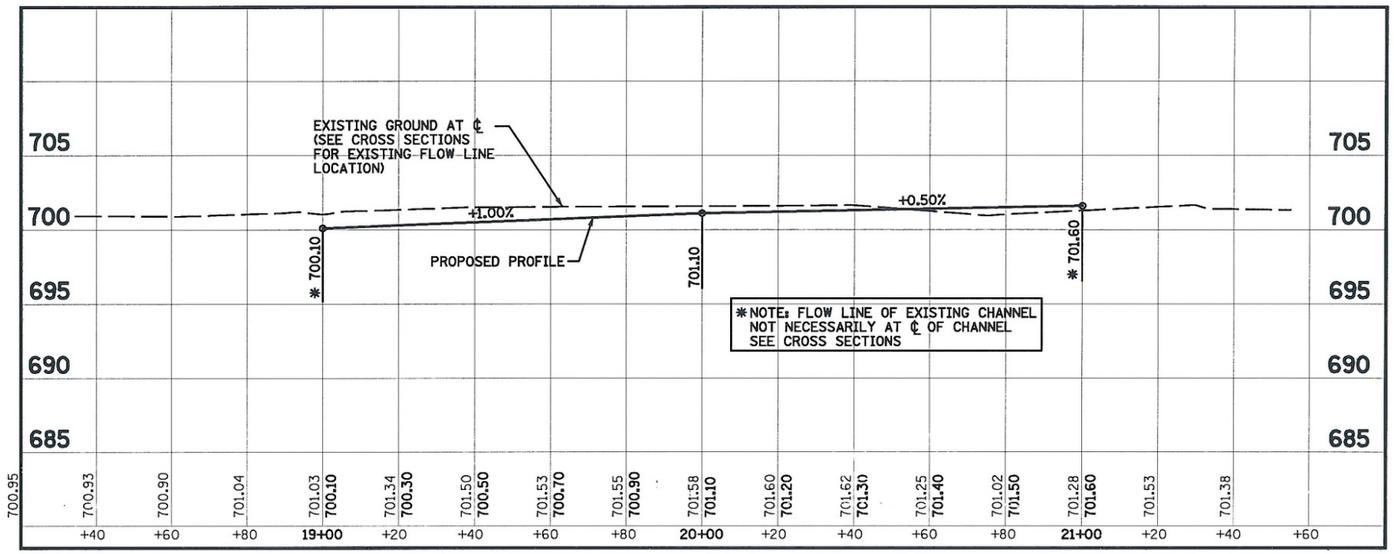


WILDCAT SLOUGH PROFILE

PLAN GRAPHIC SCALE

20' 10' 0' 20'

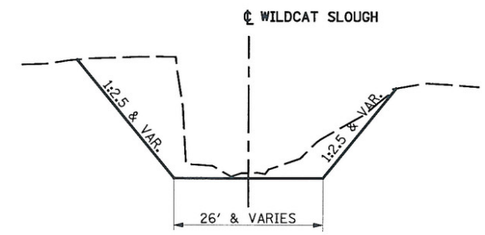


STA. 19+00 TO STA. 21+00

NOTE:
TRANSITION FROM EXISTING CHANNEL TO PROPOSED CHANNEL GEOMETRY FROM STA. 19+00 TO STA. 19+25 AND FROM STA. 20+75 TO STA. 21+00.

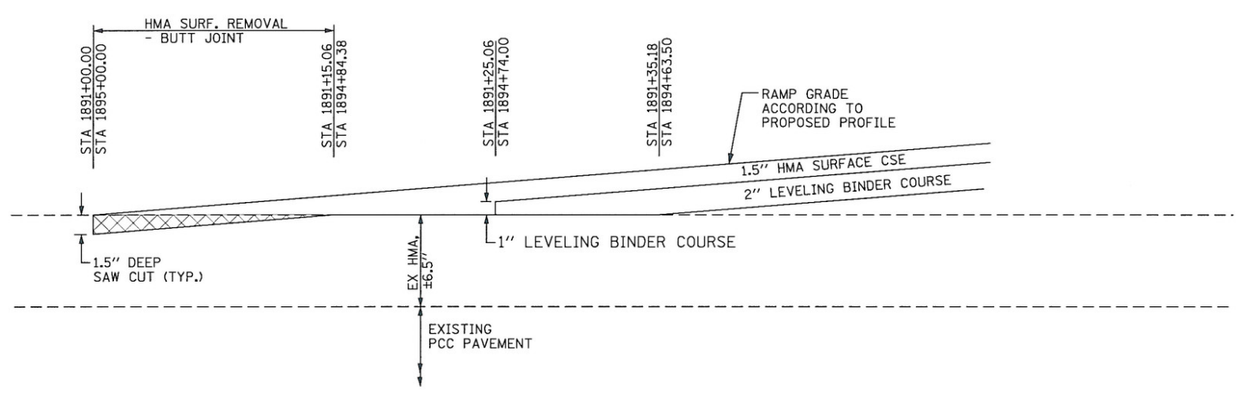


BUTT JOINT DETAIL

F.A.P. 709 (US 136)

STA. 1891+00.00 TO STA. 1891+15.06
STA. 1894+84.38 TO STA. 1895+00.00

NOTE:

SAW CUT IS INCLUDED IN COST OF HMA SURFACE REMOVAL - BUTT JOINT.

HURST-ROSCHE ENGINEERS, INC.
HILLSBORO, ILLINOIS 62049
(217)532-3959 FAX (217)532-3212
HR HURST-ROSCHE ENGINEERS, INC.

| | | | |
|---|---|---|---|
| FILE NAME = | USER NAME = HURST-ROSCHE | DESIGNED - JJC | REVISED - |
| ts\192-1239_wo#1_wildcat\dgn\D570427-sht-detail01.dgn | | DRAWN - TWC | REVISED - |
| | PLOT SCALE = 40.0001 ' / IN. | CHECKED - MAR | REVISED - |
| | PLOT DATE = 12/16/2009 | DATE - 12-16-09 | REVISED - |

**STATE OF ILLINOIS**
**DEPARTMENT OF TRANSPORTATION**

**WILDCAT SLOUGH DETAILS**

SCALE: VARIES | SHEET NO. 1 OF 1 SHEETS | STA. | TO STA.

| F.A.P RTE. | SECTION | COUNTY | TOTAL SHEETS | SHEET NO. |
|---|---|---|---|---|
| 709 | (105BR)BR | CHAMPAIGN | 55 | 38 |

CONTRACT NO. 70427

FED. ROAD DIST. NO. 5 | ILLINOIS | FED. AID PROJECT

...\dgn\D570427-sht-detail01.dgn 12/16/2009 7:38:59 AM

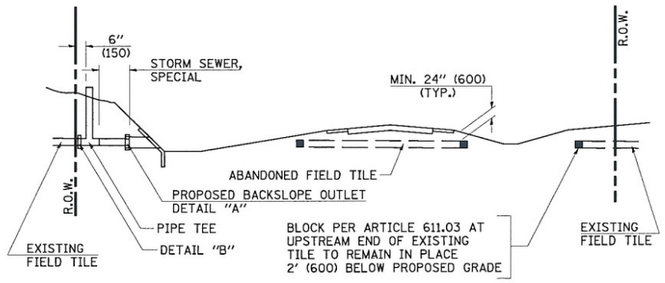


## METHOD 'A' (2 LANE)

STORM SEWER FLOW LINE ABOVE PROPOSED DITCH FLOW LINE

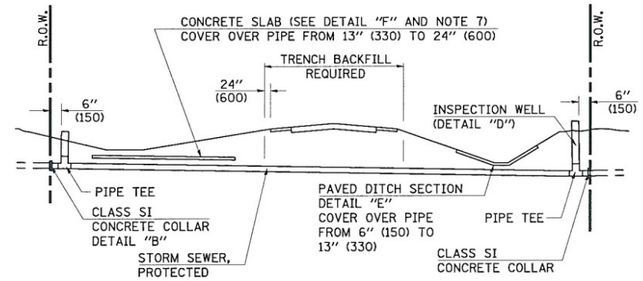


## METHOD 'B' (2 LANE)

STORM SEWER LESS THAN 2' (600 mm) BELOW DITCH FLOW LINE AND STORM SEWERS CROSSING UNDER PAVEMENT AND PAVED DITCH

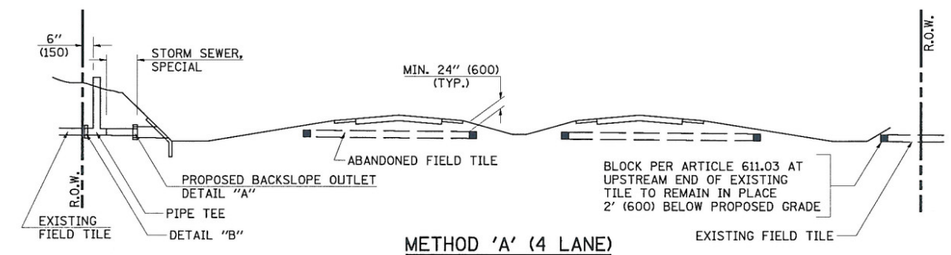


## METHOD 'A' (4 LANE)

STORM SEWER FLOW LINE ABOVE PROPOSED DITCH FLOW LINE

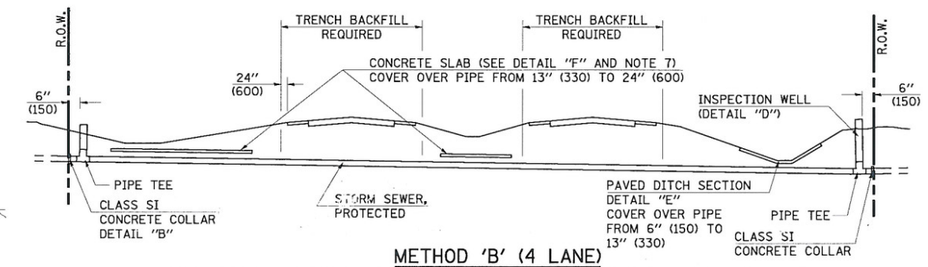


## METHOD 'B' (4 LANE)

STORM SEWER LESS THAN 2' (600 mm) BELOW DITCH FLOW LINE AND STORM SEWERS CROSSING UNDER PAVEMENTS AND PAVED DITCHES

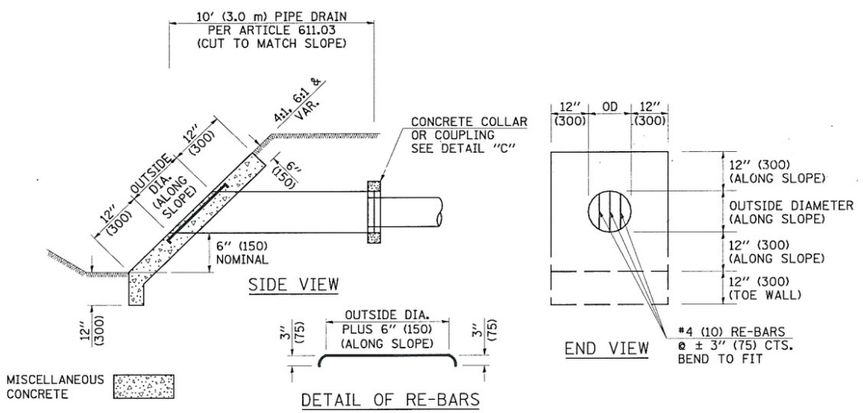


## HEADWALL FOR BACKSLOPE OUTLET

DETAIL "A"

| CONCRETE PIPE STANDARD SIZES | |
|---|---|
| STORM SEWER | RISER |
| 6" (150) | 6" (150) |
| 8" (200) | 6" (150) |
| 10" (250) | 8" (200) |
| 12" (300) | 10" (250) |
| OR GREATER | |

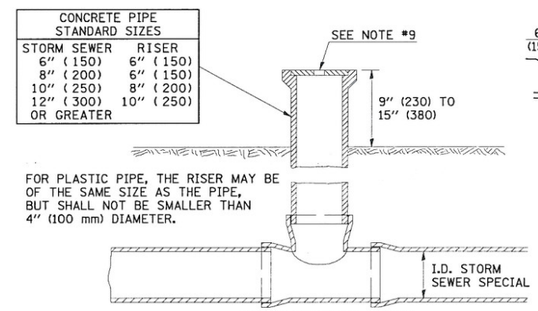


## INSPECTION WELL

DETAIL "D"

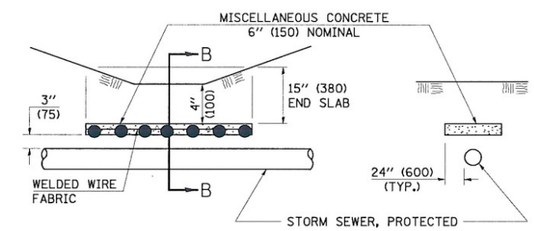


## CONCRETE SLAB

DETAIL "F"

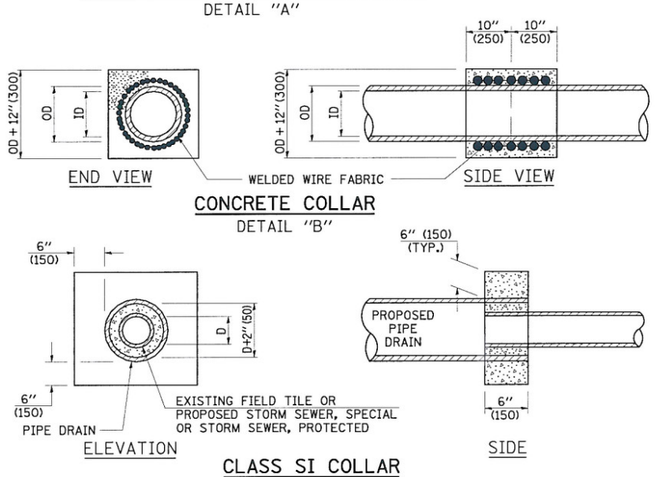


## CONCRETE COLLAR

DETAIL "B"

## CLASS SI COLLAR

DETAIL "C"

## GENERAL NOTES

1. EXISTING FIELD TILE ENCOUNTERED BY EXPLORATION TRENCH SHALL BE INSPECTED BY THE ENGINEER FOR UNOBSTRUCTED FLOW WITHIN THE LIMITS OF THE RIGHT-OF-WAY.
2. ONLY FIELD TILE THAT DOES NOT HAVE SATISFACTORY FLOW AND OR HAS VISIBLE SIGNS OF DETERIORATION (SINK HOLES, ETC.) SHALL BE REPLACED WITHIN THE LIMITS OF THE RIGHT-OF-WAY IN ACCORDANCE WITH METHOD "B".
3. INSPECTION WELLS SHALL BE CONSTRUCTED APPROXIMATELY 6" (150 mm) INSIDE OF BOTH RIGHT-OF-WAY LINES AT ALL FIELD TILE LOCATIONS.
4. EXISTING FIELD TILE ABANDONED UNDER EXISTING PAVEMENTS OR PAVED SHOULDERS SHALL BE FILLED WITH FLOWABLE GROUT AS DIRECTED BY THE ENGINEER. THIS WORK WILL BE PAID FOR ACCORDING TO ARTICLE 109.04.
5. NON-CIRCULAR FIELD TILE SHALL BE REPLACED WITH STORM SEWER, SPECIAL OF AT LEAST THE SAME CROSS SECTIONAL AREA. ALL EXISTING FIELD TILE SHALL BE REPLACED WITH STORM SEWER OF THE TYPE REQUIRED FOR THE MINIMUM DEPTH OF COVER.
6. THE 6" (150 mm) CONCRETE SLAB OR DITCH LINING SHALL BE POURED THE LENGTH OF THE TRENCH AT ALL DITCH FLOW LINE LOCATIONS WITHIN THE RIGHT-OF-WAY WITH LESS THAN 2' (600 mm) OF EARTH COVER. MISCELLANEOUS CONCRETE SHALL BE USED ACCORDING TO SECTION 611.
7. ALL MISCELLANEOUS SLABS, APRONS AND DITCH LININGS SHALL BE REINFORCED WITH WELDED WIRE FABRIC AS SHOWN FOR PAVED DITCH IN STANDARD 606401.
8. HEADWALL FOR BACKSLOPE OUTLET MAY BE USED FOR PIPE DRAIN DIAMETERS UP TO 10" (250 mm). SPECIAL DESIGNS WILL BE REQUIRED FOR LARGER SIZES.
9. THE INSPECTION WELL LID FOR P.C.C. PIPE SHALL BE CONSTRUCTED OF 3/8" (10 mm) CAST IRON AND PROVIDED WITH A 1" (25 mm) DIAMETER HOLE IN CENTER. THE LID FOR THE OTHER PIPE MATERIALS SHALL BE A GRATE ASSEMBLY PREFABRICATED FOR AND COMPATIBLE WITH THE PIPE SYSTEM.

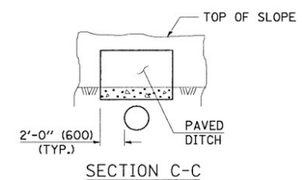


## PAVED DITCH

DETAIL "E"

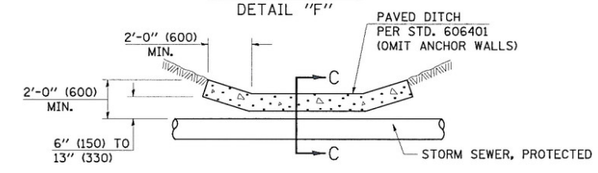


Note: All dimensions are in INCHES (millimeters) unless otherwise shown.

**DISTRICT 5 DETAIL NO. 61101011A**

| FILE NAME = t:\192-1239_wo*1_w:\idot\dgn\61101011a.dgn | USER NAME = HURST-ROSCHE | DESIGNED - | REVISED - 11/06 |
|---|---|---|---|
| | | DRAWN - | REVISED - |
| | PLOT SCALE = 40.0021 ' / IN. | CHECKED - | REVISED - |
| | PLOT DATE = 12/16/2009 | DATE - | REVISED - |

**STATE OF ILLINOIS**
**DEPARTMENT OF TRANSPORTATION**

**FIELD TILE SYSTEMS (TREATMENT OF EXISTING)**

SCALE: | SHEET NO. OF SHEETS | STA. TO STA.

| F.A. RTE. | SECTION | COUNTY | TOTAL SHEETS | SHEET NO. |
|---|---|---|---|---|
| 709 | (150BR)BR | CHAMPAIGN | 55 | 39 |

CONTRACT NO. 70427

FED. ROAD DIST. NO. 5 | ILLINOIS | FED. AID PROJECT

...\dgn\61101011a.dgn 12/16/2009 7:39:00 AM

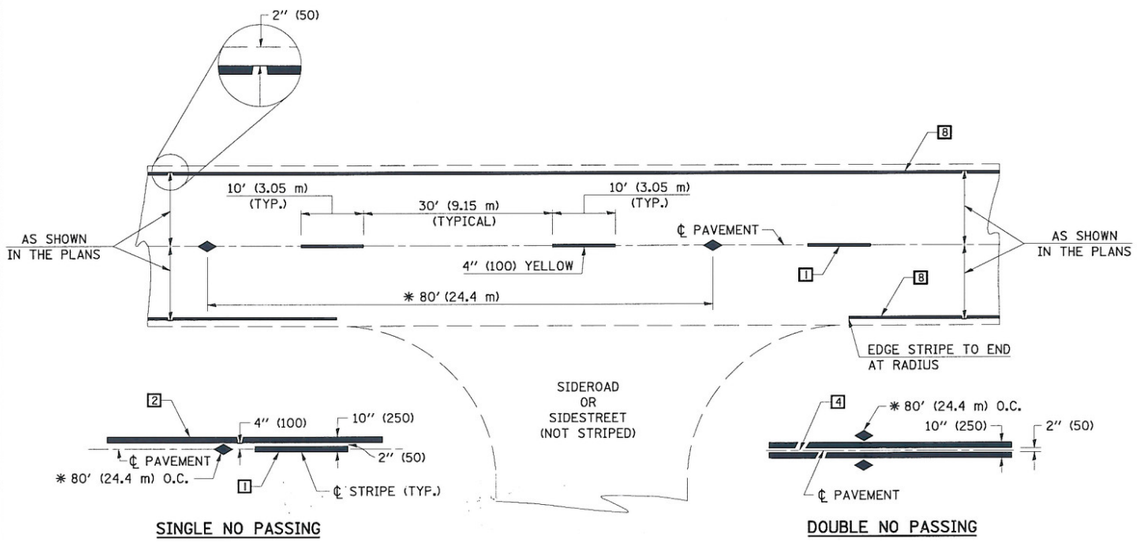


SINGLE NO PASSING

DOUBLE NO PASSING

* REDUCE TO 40' (12.2 m) O.C. ON CURVES WITH POSTED OR ADVISORY SPEEDS OF 45 mph (70 km/h) OR LESS.

TWO LANE/TWO WAY

## TYPICAL PAVEMENT MARKING LEGEND

1. 4" (100) SKIP-DASH (YELLOW)
2. 4" (100) SOLID (YELLOW)
3. 12" (300) DIAGONAL (YELLOW)
4. 4" (100) DOUBLE YELLOW (NARROW)
5. RESERVED
6. RESERVED
7. 4" (100) SKIP-DASH (WHITE)
8. 4" (100) SOLID (WHITE)
9. 12" (300) DIAGONAL (WHITE)
10. 6" (150) SOLID (WHITE)
11. 24" (600) STOP BAR (WHITE)
12. 8" (200) SOLID (WHITE)
13. 4" (100) LANE LINE EXTENSIONS (WHITE)
14. 4" (100) PARKING WHITE

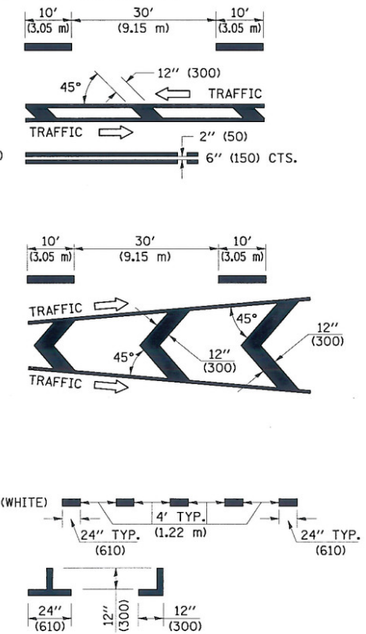


## TYPICAL PAVEMENT MARKERS LEGEND

- TWO-WAY AMBER MARKER
- ONE-WAY AMBER MARKER
- ONE-WAY CRYSTAL MARKER

RURAL LEFT TURN

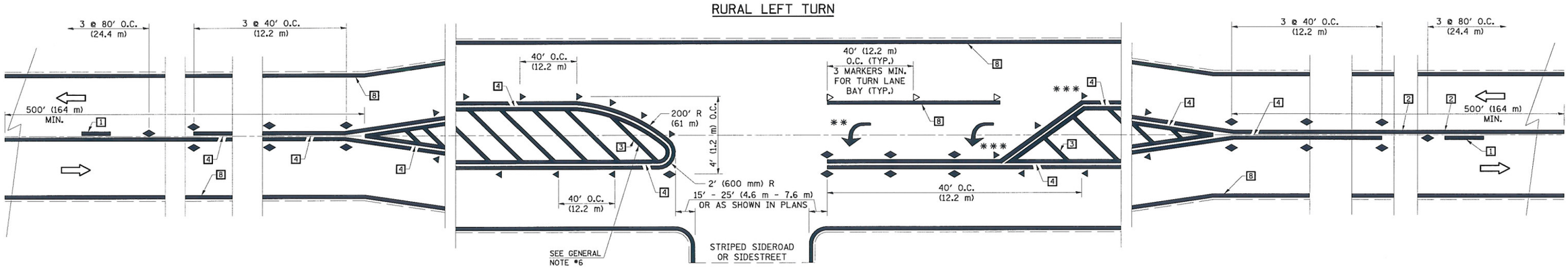


*** REDUCE SPACING IF NECESSARY TO ASSURE MARKERS AT CORNER POINTS.

** TURN ARROWS SHALL BE PLACED AS SHOWN ON SHEET #2.

Note: All dimensions are in INCHES (millimeters) unless otherwise shown.

**DISTRICT 5 DETAIL NO. 7800AAAA**

| | | | | | |
|---|---|---|---|---|---|
| FILE NAME = t:\192-1239_ao*1_w:\ldot\dgn\7800aaaa.dgn | USER NAME = HURST-ROSCHE | DESIGNED - | REVISED - 11/06 | STATE OF ILLINOIS DEPARTMENT OF TRANSPORTATION | PAVEMENT MARKING AND MARKERS (RURAL & URBAN APPLICATIONS) |
| | | DRAWN - | REVISED - 09/2009 - KJT | | |
| | PLOT SCALE = 40.000 ' / IN. | CHECKED - | REVISED - | | SCALE: SHEET NO. 1 OF 4 SHEETS STA. TO STA. |
| | PLOT DATE = 12/16/2009 | DATE - | REVISED - | | |

| F.A.P RTE. | SECTION | COUNTY | TOTAL SHEETS | SHEET NO. |
|---|---|---|---|---|
| 709 | (105BR)BR | CHAMPAIGN | 55 | 40 |
| | | CONTRACT NO. 70427 | | |
| FED. ROAD DIST. NO. 5 | ILLINOIS | FED. AID PROJECT | | |

...\dgn\7800aaaa.dgn 12/16/2009 7:39:01 AM

## URBAN LEFT TURN

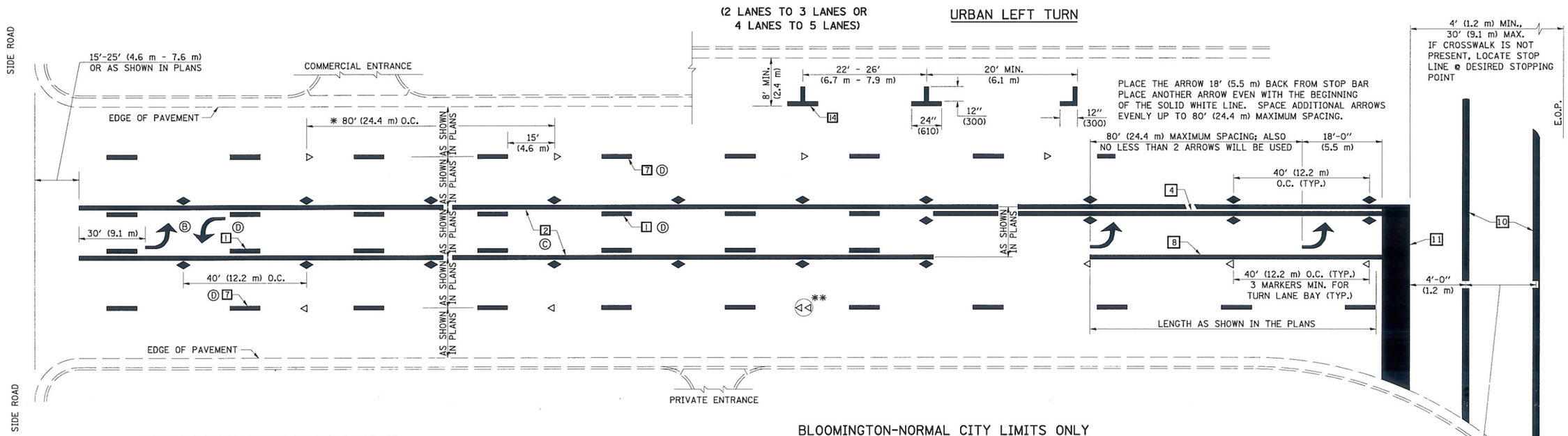


* REDUCE TO 40 FEET (12.2 METERS) ON CENTER ON CURVES WHERE ADVISORY SPEEDS ARE 10 MPH (15 km/h) LOWER THAN POSTED SPEEDS.

** DOUBLE LANE LINE MARKERS SHALL BE SPECIFIED AND SPACED AS SHOWN IN HIGHWAY STANDARD 781001 FOR MULTI-LANE DIVIDED AND UNDIVIDED HIGHWAYS.

## BLOOMINGTON-NORMAL CITY LIMITS ONLY

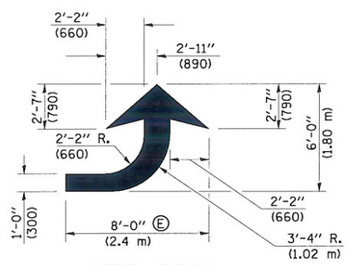


### LEFT ARROW

REVERSE FOR RIGHT ARROW
AREA = 15.6 SQ. FT. (1.47 $m^2$)
(WHITE)

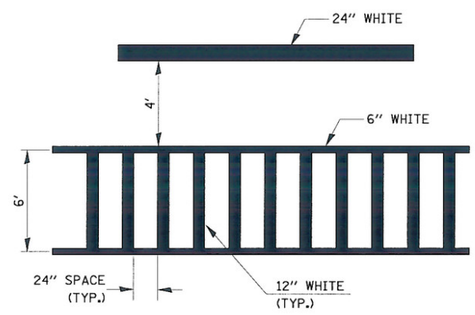


### TYPICAL SPACING FOR CROSSWALKS & STOP BARS

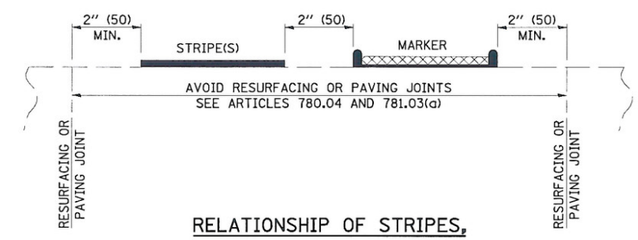


### RELATIONSHIP OF STRIPES, MARKERS AND JOINTS

GENERAL NOTES:

Ⓑ TURN ARROW PAIRS SHALL BE PLACED AT 250' (75 m) INTERVALS AND SHALL BE EVENLY SPACED BETWEEN BOTH ENDS OF THE BIDIRECTIONAL LEFT TURN LANE.

Ⓒ THE SOLID YELLOW PAVEMENT MARKINGS [2] SHOULD GENERALLY START OR END NEAR THE RADIUS POINT OF EACH STREET RETURN EXCEPT WHERE ONE OR BOTH ENDS WOULD INCLUDE STOP BARS.

Ⓓ THE SKIP-DASH PAVEMENT MARKINGS [1] OR [7] SHOULD BE CENTERED BETWEEN BOTH ENDS OF EACH CITY BLOCK AND SHALL BE PLACED SO THEY LINE UP ACROSS FROM EACH OTHER. SEE EXAMPLE ON SHEET 2 OF 3.

Ⓔ USE LARGE ARROW SIZE FOR BOTH RURAL AND URBAN LOCATIONS. (SEE LAST PAGE OF SECTION 780x FOR SYMBOLS TABLE)

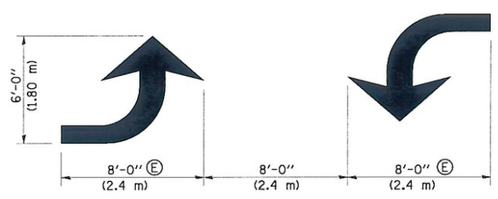


### TYPICAL DOUBLE TURN ARROWS (WHITE)

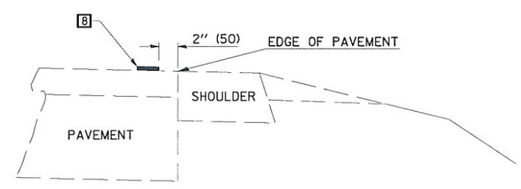


### RELATIONSHIP OF EDGE LINE TO EDGE OF PAVEMENT

(SAFETY SHOULDER OR PAVED SURFACE)
SEE ARTICLE 780.04

Note: All dimensions are in INCHES (millimeters) unless otherwise shown.

**DISTRICT 5 DETAIL NO. 7800AAAA**

| | | | | | | | | | |
|---|---|---|---|---|---|---|---|---|---|
| FILE NAME = ts\190-1239_wo*1_wildcat\dgn\7800aaaa.dgn | USER NAME = HURST-ROSCHE | DESIGNED - | REVISED - 11/06 | STATE OF ILLINOIS DEPARTMENT OF TRANSPORTATION | PAVEMENT MARKING AND MARKERS (RURAL & URBAN APPLICATIONS) | F.A.P RTE. | SECTION | COUNTY | TOTAL SHEETS / SHEET NO. |
| | | DRAWN - | REVISED - 09/2009 - KJT | | | 709 | (105BR)BR | CHAMPAIGN | 55 / 41 |
| | PLOT SCALE = 40.0000 ' / IN. | CHECKED - | REVISED - | | | | | CONTRACT NO. 70427 | |
| | PLOT DATE = 12/16/2009 | DATE - | REVISED - | | SCALE: SHEET NO. 2 OF 4 SHEETS STA. TO STA. | FED. ROAD DIST. NO. 5 | ILLINOIS | FED. AID PROJECT | |

...\dgn\7800aaaa.dgn 12/16/2009 7:39:01 AM

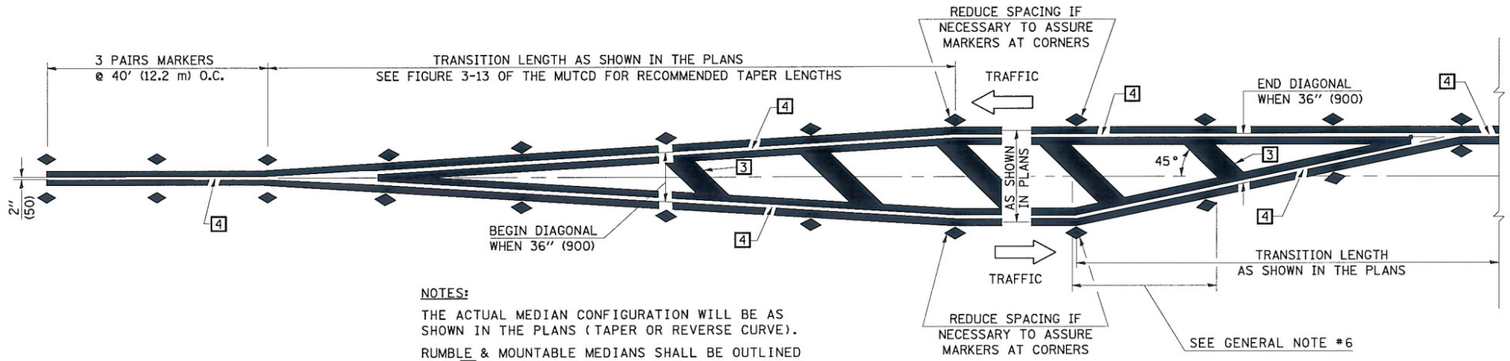


NOTES:

THE ACTUAL MEDIAN CONFIGURATION WILL BE AS SHOWN IN THE PLANS (TAPER OR REVERSE CURVE).

RUMBLE & MOUNTABLE MEDIANS SHALL BE OUTLINED WITH [2].

## TYPICAL MEDIAN TRANSITIONS

## GENERAL NOTES

1. WHEN MEDIANS ARE PRESENT, PAVEMENT MARKINGS ARE TO BE PLACED ADJACENT TO MEDIANS.
2. SOME OF THE INFORMATION INCLUDED WITH THIS DETAIL MAY NOT BE APPLICABLE TO THIS IMPROVEMENT.
3. PAVEMENT MARKINGS ARE TO BE EXTENDED THROUGH OMISSIONS WHEN APPLICABLE.
4. A STRIPING KEY IS AVAILABLE ELSEWHERE AND SHALL BE SHOWN WHERE THE QUANTITIES ARE LISTED.
5. FINAL PAVEMENT MARKINGS SHALL BE IN PLACE PRIOR TO PLACING ANY RAISED REFLECTIVE PAVEMENT MARKERS.
6. THE FOLLOWING CRITERIA SHALL BE USED FOR SELECTING THE DIAGONAL PAVEMENT MARKING SPACING,
   <30 MPH USE 15' (<50 km/h USE 4.5 m)
   30-45 MPH USE 20' (50-75 km/h USE 6.0 m)
   >45 MPH USE 30' (>75 km/h USE 9.0 m)

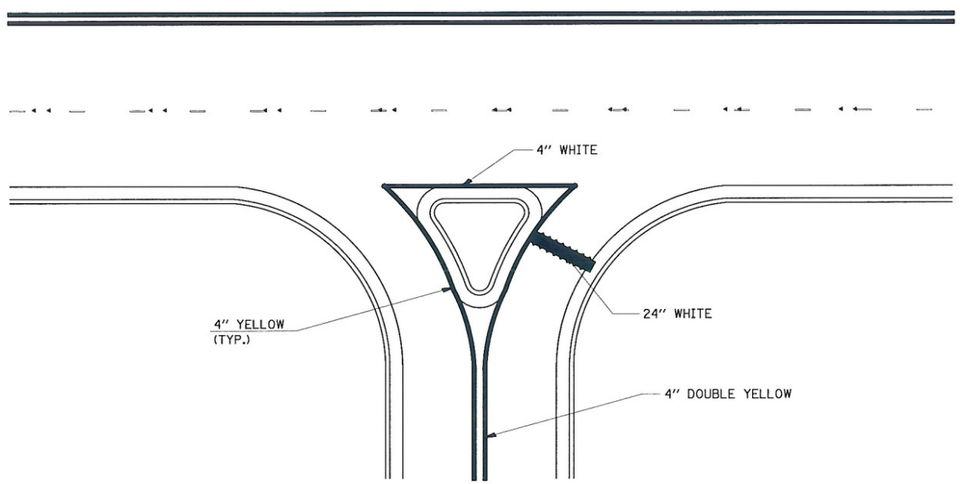


## RIGHT IN - RIGHT OUT ACCESS

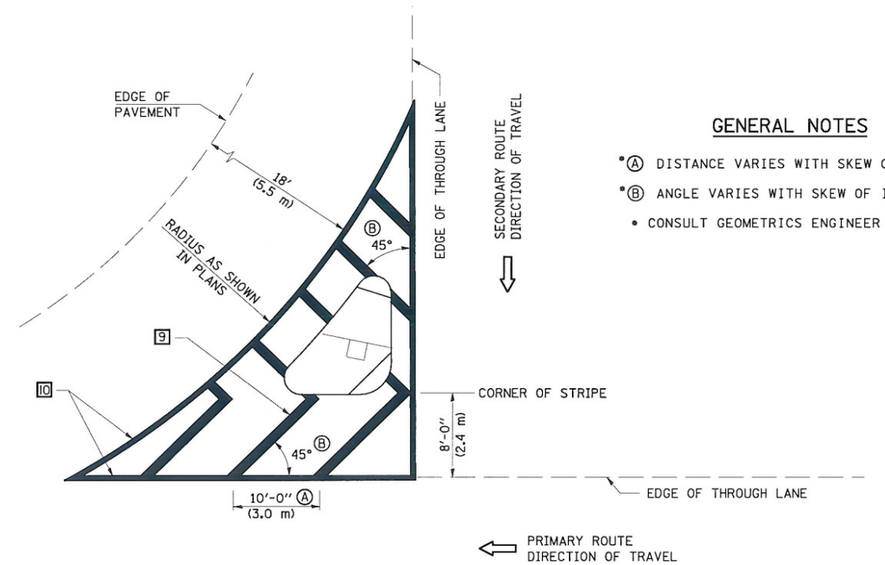


## GENERAL NOTES

*Ⓐ DISTANCE VARIES WITH SKEW OF INTERSECTION.

*Ⓑ ANGLE VARIES WITH SKEW OF INTERSECTION.

• CONSULT GEOMETRICS ENGINEER

## ISLAND

Note: All dimensions are in INCHES (millimeters) unless otherwise shown.

**DISTRICT 5 DETAIL NO. 7800AAAA**

| | | | | | |
|---|---|---|---|---|---|
| FILE NAME = t:\192-1239_wo*1_wildcat\dgn\7800aaaa.dgn | USER NAME = HURST-ROSCHE | DESIGNED - | REVISED - 11/06 | STATE OF ILLINOIS DEPARTMENT OF TRANSPORTATION | PAVEMENT MARKING AND MARKERS (RURAL & URBAN APPLICATIONS) |
| | | DRAWN - | REVISED - 09/2009 - KJT | | |
| | PLOT SCALE = 40.0001 ' / IN. | CHECKED - | REVISED - | | SCALE: SHEET NO. 3 OF 4 SHEETS STA. TO STA. |
| | PLOT DATE = 12/16/2009 | DATE - | REVISED - | | |

| F.A.P RTE. | SECTION | COUNTY | TOTAL SHEETS | SHEET NO. |
|---|---|---|---|---|
| 709 | (105BR)BR | CHAMPAIGN | 55 | 42 |
| | | CONTRACT NO. 70427 | | |
| FED. ROAD DIST. NO. 5 | ILLINOIS | FED. AID PROJECT | | |

...\dgn\7800aaaa.dgn 12/16/2009 7:39:01 AM

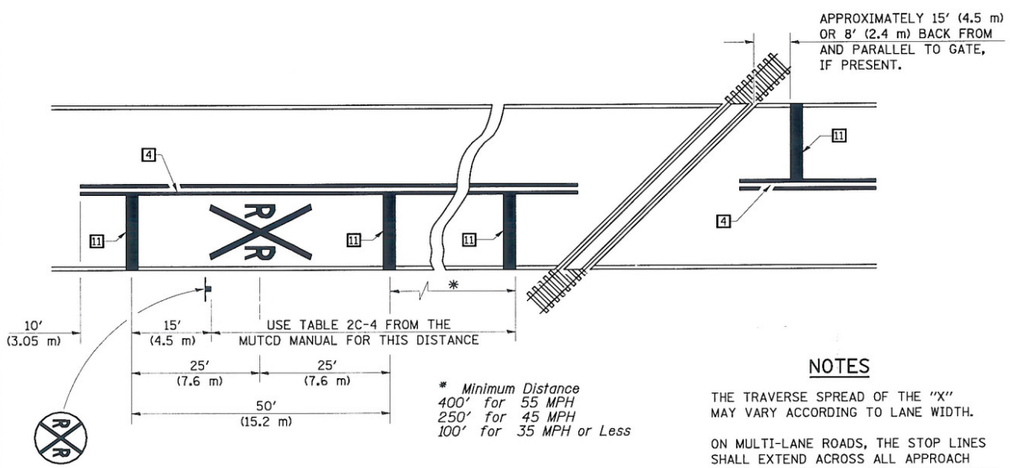


## PAVEMENT MARKINGS AT RAILROAD-HIGHWAY GRADE CROSSING

## NOTES

THE TRAVERSE SPREAD OF THE "X" MAY VARY ACCORDING TO LANE WIDTH.

ON MULTI-LANE ROADS, THE STOP LINES SHALL EXTEND ACROSS ALL APPROACH LANES AND SEPARATE RXR SYMBOLS SHALL BE PLACED ADJACENT TO EACH OTHER IN EACH LANE.

WHEN THE PAVEMENT MARKING SYMBOL IS USED, A PORTION OF THE SYMBOL SHOULD BE LOCATED DIRECTLY ADJACENT TO THE ADVANCE WARNING SIGN (W10-1) AS PLACED BY TABLE II-1, CONDITION B OF THE MUTCD.

RAILROAD CROSSING WITH INTERCONNECT ONLY

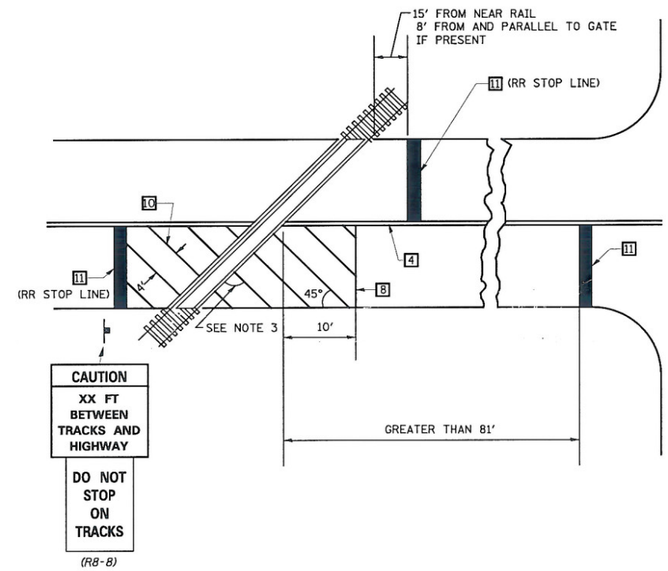


RAILROAD CROSSING WITH INTERCONNECT AND PRE-SIGNALS

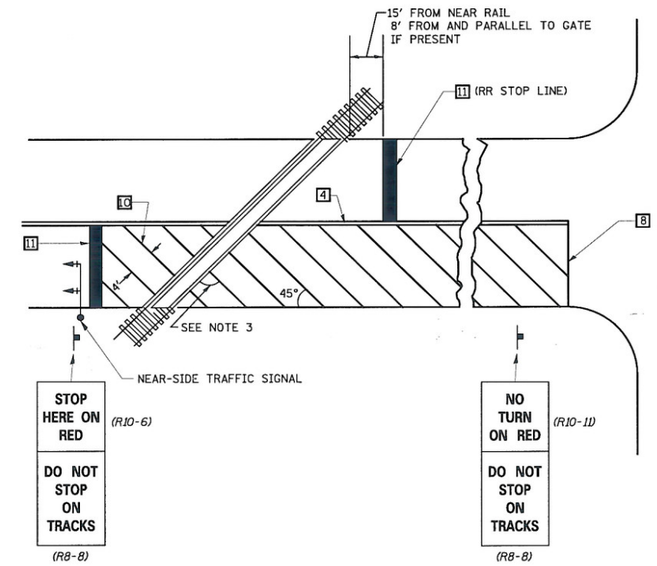


## SUPPLEMENTAL PAVEMENT MARKING TREATMENT FOR RAILROAD-HIGHWAY GRADE CROSSING

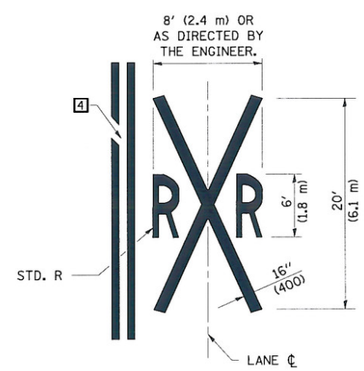


## GENERAL NOTES

1. SUPPLEMENTAL PAVEMENT MARKINGS TO BE INSTALLED ONLY ON APPROACHES TO INTERSECTIONS CONTROLLED BY TRAFFIC SIGNALS WHICH ARE INTERCONNECTED WITH THE RAILROAD WARNING SIGNALS.
2. EXTEND PAVEMENT MARKINGS TO THE INTERSECTION ONLY WHERE NEAR-SIDE TRAFFIC SIGNALS ARE USED.
3. WHERE THE ANGLE BETWEEN THE DIAGONAL PAVEMENT MARKINGS AND THE TRACK WOULD BE LESS THAN 20°, THE PAVEMENT MARKINGS SHOULD BE PLACED IN THE OPPOSITE DIRECTION FROM THAT SHOWN.

Note: All dimensions are in INCHES (millimeters) unless otherwise shown.

**DISTRICT 5 DETAIL NO. 7800AAAA**

| | | | | |
|---|---|---|---|---|
| FILE NAME = t:\190-1239_ao*1.wldot\dgn\7800aaaa.dgn | USER NAME = HURST-ROSCHE | DESIGNED - | REVISED - 11/06 | |
| | | DRAWN - | REVISED - 09/2009 - KJT | |
| | PLOT SCALE = 42.0001 ' / IN. | CHECKED - | REVISED - | |
| | PLOT DATE = 12/16/2009 | DATE - | REVISED - | |

**STATE OF ILLINOIS**
**DEPARTMENT OF TRANSPORTATION**

**PAVEMENT MARKING AND MARKERS (RURAL & URBAN APPLICATIONS)**

SCALE: | SHEET NO. 4 OF 4 SHEETS | STA. | TO STA.

| F.A.P RTE. | SECTION | COUNTY | TOTAL SHEETS | SHEET NO. |
|---|---|---|---|---|
| 709 | (105BR)BR | CHAMPAIGN | 55 | 43 |

CONTRACT NO. 70427

FED. ROAD DIST. NO. 5 | ILLINOIS | FED. AID PROJECT

...\dgn\7800aaaa.dgn 12/16/2009 7:39:02 AM

(A)

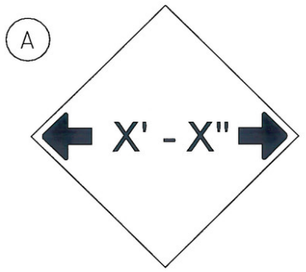


W12-2(O)-48"x48"(1200x1200)

* STAGE I SIGNED 15'-3''
STAGE II SIGNED 12-2''

(B)

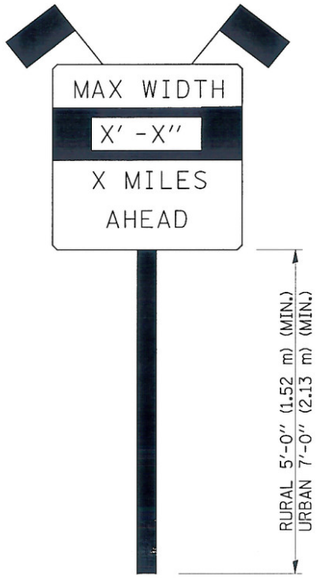


SIGN PANEL, TYPE II

(B)

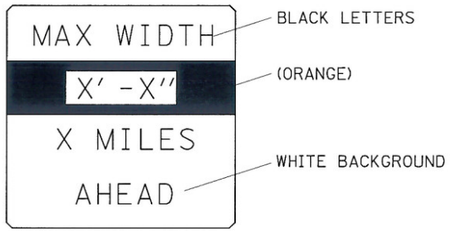


W12-I103(O)-48"x48"(1200x1200)
"D" LETTERS/NUMBERS

SIGN (A) 2 SIGNS - W12-2(O)-48"x48"(1200x1200) ARE TO BE PLACED AS SHOWN IN THE PLANS OR AS DIRECTED BY THE ENGINEER.

SIGN (B) 2 SIGNS - (SIGN PANEL, TYPE II) AS SHOWN ARE TO BE PLACED AS SHOWN IN THE PLANS OR AS DIRECTED BY THE ENGINEER.

## GENERAL NOTES

1. ALL TRAFFIC CONTROL DEVICES SHALL BE FURNISHED, ERECTED AND MAINTAINED BY THE CONTRACTOR.
2. ALL (B) SIGNS SHALL HAVE FLAGS INSTALLED UNLESS OTHERWISE DIRECTED.
3. LOCATIONS OF TRAFFIC CONTROL DEVICES MAY BE ADJUSTED BY THE ENGINEER.
4. ALL TRAFFIC CONTROL SHOWN ON THIS SHEET SHALL BE PAID FOR AT THE CONTRACT LUMP SUM PRICE FOR WIDTH RESTRICTION SIGNING.
5. ALL SIGNS SHALL BE POST MOUNTED UNLESS OTHERWISE DIRECTED.
6. ALL SIGNS SHOWN ORANGE (O) SHALL BE FLUORESCENT ORANGE.

Note: All dimensions are in INCHES (millimeters) unless otherwise shown.

**DISTRICT 5 DETAIL NO. X7200201**

| | | | |
|---|---|---|---|
| FILE NAME = t:\192-1239_we01_wildcat\dgn\x7200201.dgn | USER NAME = HURST-ROSCHE | DESIGNED - | REVISED - 11/06 |
| | | DRAWN - | REVISED - 05/08 |
| | PLOT SCALE = 40.0001 ' / IN. | CHECKED - | REVISED - 10/08 - KJT |
| | PLOT DATE = 12/16/2009 | DATE - | REVISED - 7/09 - KJT |

**STATE OF ILLINOIS**
**DEPARTMENT OF TRANSPORTATION**

**WIDTH RESTRICTION SIGNING**

SCALE: | SHEET NO. OF SHEETS | STA. TO STA.

| F.A. RTE. | SECTION | COUNTY | TOTAL SHEETS | SHEET NO. |
|---|---|---|---|---|
| 709 | (105BR)BR | CHAMPAIGN | 55 | 44 |

CONTRACT NO. 70427

FED. ROAD DIST. NO. 5 | ILLINOIS | FED. AID PROJECT

...\dgn\x7200201.dgn 12/16/2009 7:39:03 AM

# FOR INFORMATION ONLY

STATE OF ILLINOIS
DEPARTMENT OF TRANSPORTATION

| ROUTE NO. | SECTION | COUNTY | TOTAL SHEETS | SHEET NO. |
|---|---|---|---|---|
| SBI 119 | | CHAMPAIGN | 26 | 16 |
| FED. ROAD DIST. NO. 5 | ILLINOIS | FED. AID PROJECT- | | |

SHEET NO. 1
3 SHEETS

Contract Number: 70659

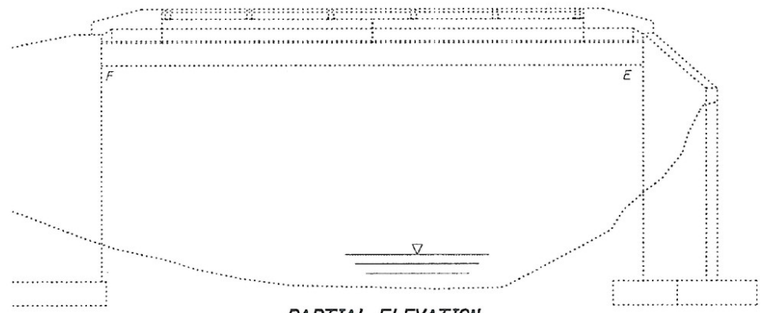


PARTIAL ELEVATION

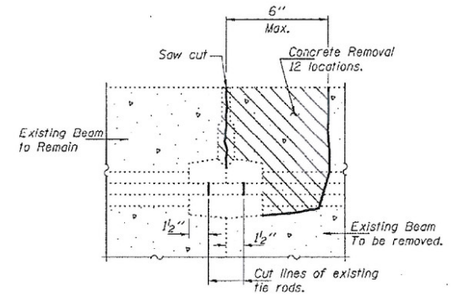


BEAM REMOVAL DETAIL
AT TRANSVERSE TIES

## GENERAL NOTES

The contractor is advised that the existing PPC Deck Beams are in a deteriorated condition with reduced load carrying capacity. It is the contractors responsibility to account for the condition of the beams when developing construction procedures.

If the contractor's procedure for existing beam removal or placement of new beams involves placement of cranes or other heavy equipment on the bridge, a detailed procedure shall be submitted to the Engineer for approval. The procedure shall include calculations, prepared and sealed by an Illinois Licensed Structural Engineer, verifying that the equipment and procedure used will not overstress the new or existing beams. To distribute load to multiple beams and protect the existing surface, in all cases a double layer mat of heavy timbers shall be used at all times under crane tracks or wheels and any outriggers in the down position. If necessary, shims shall be used under the crane mat to ensure uniform contact with the underlying beams. If heavy equipment will be placed on new PPC deck beams, the following shall be done prior to placement of the timber mats: placement and tightening of transverse tie assemblies, grouting and curing the dowel rods 24 hours minimum and grouting and curing the shear keys.

The top surface of the beams shall be finished according to the IDOT Manual for Fabrication of Precast Prestressed Concrete Products.

Existing reinforcement bars extending into the removal area shall be cleaned, straightened and incorporated into the new construction. Any reinforcement bars that are damaged during concrete removal shall be replaced with an approved bar splicer or anchorage system. Cost included with Concrete Removal.

Plan dimensions and details relative to existing plans are subject to routine variations. The Contractor shall field verify existing dimensions and details affecting new construction and make necessary approved adjustments prior to construction or ordering of materials. Such variations shall not be cause for additional compensation for a change in scope of the work, however, the Contractor will be paid for the quantity actually furnished based upon the unit price bid for the work.

All structural steel shall conform to AASHTO Classification M-270 Gr. 36, unless otherwise noted.

Temporary concrete barrier shall only be anchored into the overlay and not into the PPC Deck Beams.

Any damage done to the bridge during beam removal shall be repaired by the Contractor. Cost to be included in the cost of Removal of Existing PPC Deck Beams.

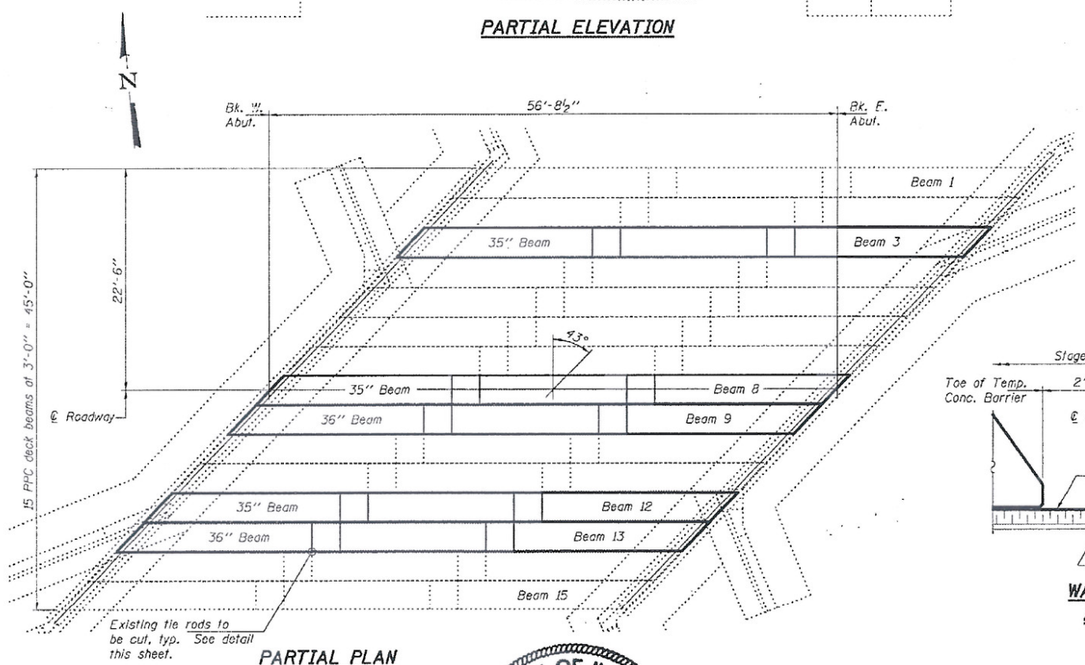


PARTIAL PLAN

## DESIGN STRESSES
## PRECAST UNITS

f'c = 5,000 psi
f'ci = 4,000 psi
f's = 270,000 psi (½"Φ low lax strands)
f'si = 201,960 psi (½"Φ low lax strands)

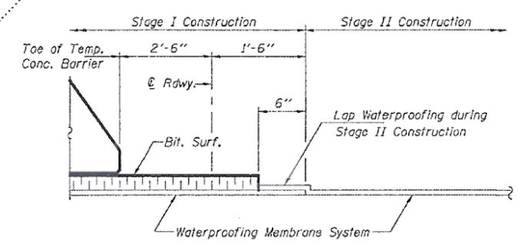


WATERPROOFING TREATMENT
AT STAGE CONSTRUCTION

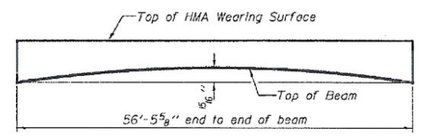


ANTICIPATED INITIAL CAMBER DIAGRAM

## TOTAL BILL OF MATERIAL

| ITEM | UNIT | QUANTITY |
|---|---|---|
| Removal of Existing PPC Deck Beams | Sq. Ft. | 847 |
| Precast Prestressed Concrete Deck Beams (27" Depth) | Sq. Ft. | 833 |
| Hot-Mix Asphalt Surface Removal | Sq. Yd. | 20.8 |
| HMA Surface Course Mix "D" N50 | Tons | 12.9 |
| PC Mortar Fairing Course | Foot | 451.8 |
| Asbestos Bearing Pad Removal | Each | 16 |
| Waterproofing Membrane System | Sq. Yd. | 114.9 |

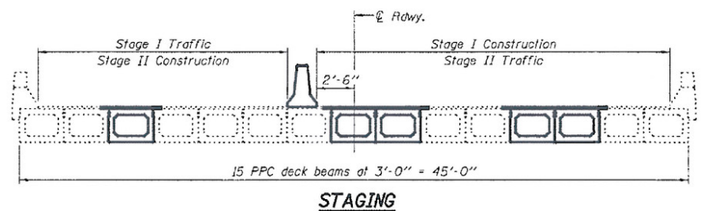


STAGING
(Looking East)

PLAN AND ELEVATION
SBI 119
CHAMPAIGN COUNTY
SN 010-0062

| | |
|---|---|
| DESIGNED | Victor H. Velez |
| CHECKED | |
| DRAWN | baliva |
| CHECKED | V HU SJB |

NOVEMBER 5, 2007
EXAMINED — ENGINEER OF STRUCTURAL SERVICES
PASSED — ENGINEER OF BRIDGES AND STRUCTURES

STATE OF ILLINOIS
RALPH E. ANDERSON
081-004625
SPRINGFIELD
LICENSED STRUCTURAL ENGINEER

Expires: November 30, 2008

HURST-ROSCHE ENGINEERS, INC.
HILLSBORO, ILLINOIS 62049
(217)532-3959 FAX (217)532-3212

HR HURST-ROSCHE ENGINEERS, INC.

...\deck_beams_fy08\0100062.dgn 11/5/2007 1:49:27 PM

| | | | |
|---|---|---|---|
| FILE NAME = t:\192-1239_wo*1_wildcat\dgn\D570427-sht-detail_GPE.dgn | USER NAME = HURST-ROSCHE | DESIGNED - | REVISED - |
| | | DRAWN - | REVISED - |
| | PLOT SCALE = 40.0001 ' / IN. | CHECKED - | REVISED - |
| | PLOT DATE = 12/16/2009 | DATE - 12-16-09 | REVISED - |

STATE OF ILLINOIS
DEPARTMENT OF TRANSPORTATION

GENERAL PLAN AND ELEVATION FROM 2007 AS-BUILT PLANS

SCALE: VARIES | SHEET NO. 1 OF 1 SHEETS | STA. TO STA.

| F.A.P RTE. | SECTION | COUNTY | TOTAL SHEETS | SHEET NO. |
|---|---|---|---|---|
| 709 | (105BR)BR | CHAMPAIGN | 55 | 45 |

CONTRACT NO. 70427
FED. ROAD DIST. NO. 5 | ILLINOIS | FED. AID PROJECT

...\dgn\D570427-sht-detail_GPE.dgn 12/16/2009 7:39:04 AM

# FOR INFORMATION ONLY

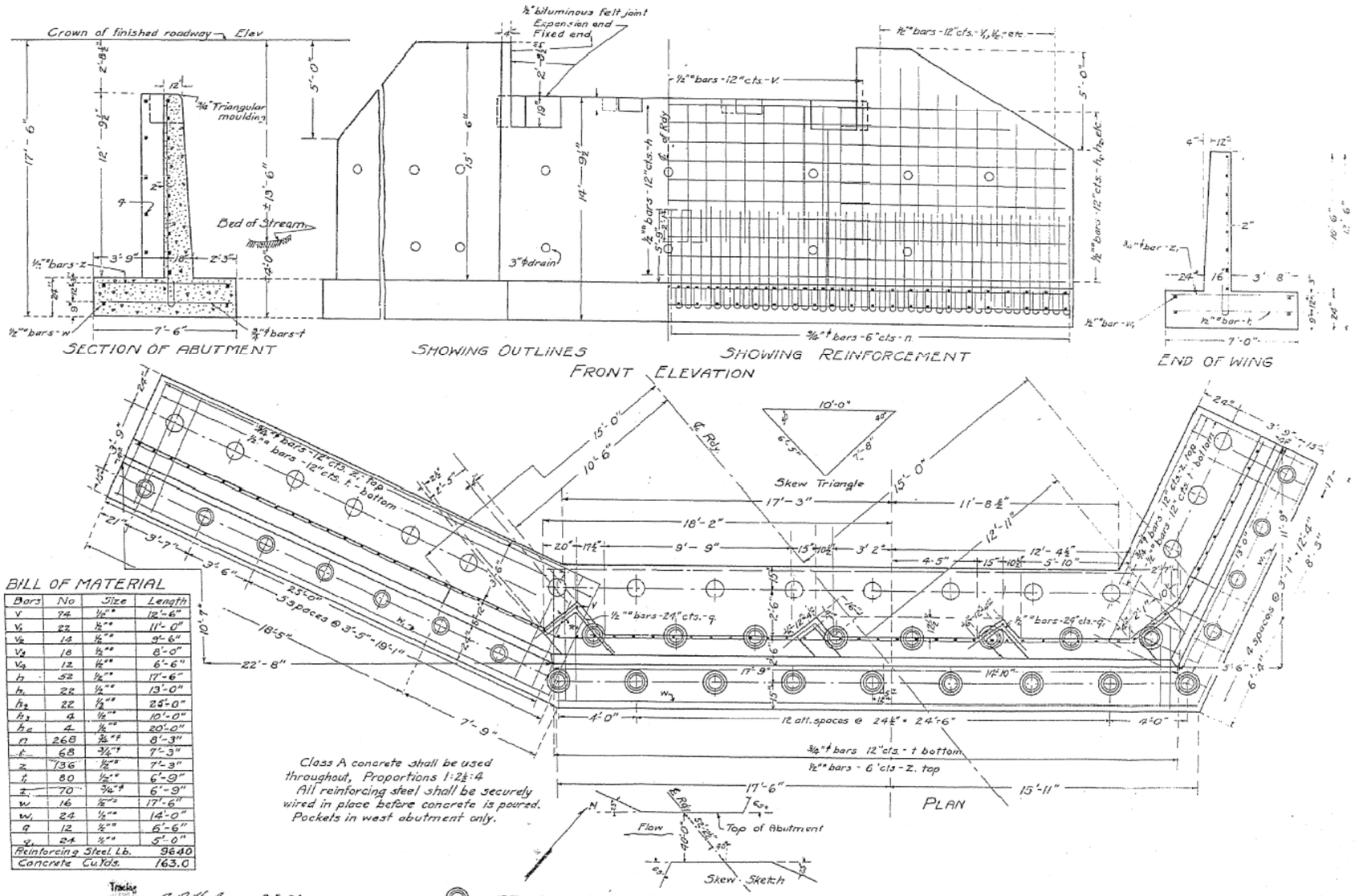


## BILL OF MATERIAL

| Bars | No | Size | Length |
|---|---|---|---|
| v | 74 | ½"ϕ | 12'-6" |
| $v_1$ | 22 | ½"ϕ | 11'-0" |
| $v_2$ | 14 | ½"ϕ | 9'-6" |
| $v_3$ | 18 | ½"ϕ | 8'-0" |
| $v_4$ | 12 | ½"ϕ | 6'-6" |
| h | 52 | ½"ϕ | 17'-6" |
| $h_1$ | 22 | ½"ϕ | 13'-0" |
| $h_2$ | 22 | ½"ϕ | 25'-0" |
| $h_3$ | 4 | ½"ϕ | 10'-0" |
| $h_4$ | 4 | ½"ϕ | 20'-0" |
| n | 268 | ¾"ϕ | 8'-3" |
| t | 68 | ¾"ϕ | 7'-3" |
| z | 136 | ½"ϕ | 7'-9" |
| $t_1$ | 80 | ½"ϕ | 6'-9" |
| $z_1$ | 70 | ¾"ϕ | 6'-9" |
| w | 16 | ½"ϕ | 17'-6" |
| $w_1$ | 24 | ½"ϕ | 14'-0" |
| q | 12 | ½"ϕ | 6'-6" |
| $q_1$ | 24 | ½"ϕ | 5'-0" |
| Reinforcing Steel, Lb. | | | 9640 |
| Concrete Cu.Yds. | | | 163.0 |

Class A concrete shall be used throughout. Proportions 1:2½:4
All reinforcing steel shall be securely wired in place before concrete is poured.
Pockets in west abutment only.

15 Ton piles - 12" butt, 10" tip 34 required, untreated
12 " " " - " " 22 " "
10 - " 10" - 8" " 34 " "

Tracing Prepared by: A. A. Halvorsen 3-2-24
Checked by: C. H. Bierman 3-3-24
Approved: R. T. Dunlap 3-3-24

Designed in office of Bridge Engineer
Division of Highways, Springfield, Ill.

12' t½"
.18
30 6

4013±T.G.-22+40 SK

5/12


HURST-ROSCHE ENGINEERS, INC.
HILLSBORO, ILLINOIS 62049
(217)532-3959 FAX (217)532-3212

HR
HURST-ROSCHE ENGINEERS, INC.


| | | | |
|---|---|---|---|
| FILE NAME = c:\pw_work\PWIDOT\KEYSRB\d0142584\D570427-sht-detail_GPE.dgn | USER NAME = keysrb | DESIGNED - | REVISED - |
| | | DRAWN - | REVISED - |
| | PLOT SCALE = 40.0000 ' / IN. | CHECKED - | REVISED - |
| | PLOT DATE = 12/17/2009 | DATE - 12-16-09 | REVISED - |

**STATE OF ILLINOIS**
**DEPARTMENT OF TRANSPORTATION**

**GENERAL PLAN AND ELEVATION FROM 1924 AS-BUILT PLANS**

SCALE: VARIES | SHEET NO. 1 OF 1 SHEETS | STA. | TO STA.

| F.A.P RTE. | SECTION | COUNTY | TOTAL SHEETS | SHEET NO. |
|---|---|---|---|---|
| 709 | (105BR)BR | CHAMPAIGN | 55 | 45A |
| | | CONTRACT NO. 70427 | | |

FED. ROAD DIST. NO. 5 | ILLINOIS | FED. AID PROJECT

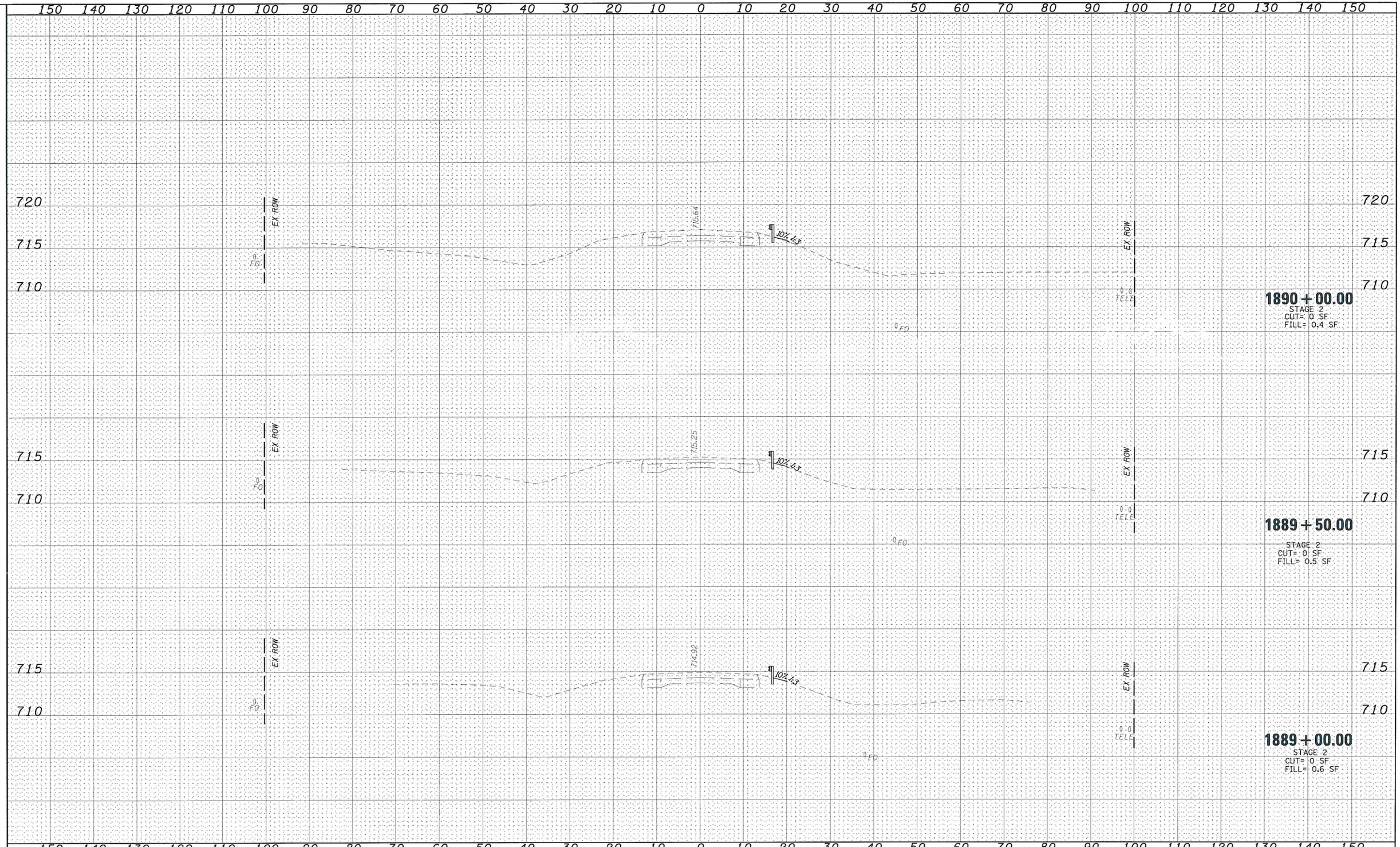


| FINAL SURVEY | |
|---|---|
| SURVEYED | |
| PLOTTED | |
| TEMPLATE | |
| AREAS | |
| AREAS CHECKED | |
| NOTE BOOK | |
| NO. | |

| ORIGINAL SURVEY | |
|---|---|
| SURVEYED | |
| PLOTTED | |
| TEMPLATE | |
| AREAS | |
| AREAS CHECKED | |
| NOTE BOOK | |
| NO. | |

HURST-ROSCHE ENGINEERS, INC.
1701 SOUTH ILLINOIS AVENUE
CARBONDALE, ILLINOIS 62903
(217)532-3959 FAX (217)532-3212

HR HURST-ROSCHE ENGINEERS, INC.

| | | | |
|---|---|---|---|
| FILE NAME = t:\192-1239.*o*1.*ildcat\dgn\D570427-sht-XSSHT.dgn | USER NAME = HURST-ROSCHE | DESIGNED - JJC | REVISED - |
| | | DRAWN - TWC | REVISED - |
| | PLOT SCALE = 20.0201 ' / IN. | CHECKED - MAR | REVISED - |
| | PLOT DATE = 12/16/2009 | DATE - 12-16-09 | REVISED - |

**STATE OF ILLINOIS**
**DEPARTMENT OF TRANSPORTATION**

**FAP 709 (US 136)**
**CROSS SECTIONS**

SCALE: | SHEET NO. OF SHEETS | STA. 1889+00.00 TO STA. 1890+00.00

| F.A.P. RTE. | SECTION | COUNTY | TOTAL SHEETS | SHEET NO. |
|---|---|---|---|---|
| 709 | (105BR)BR | CHAMPAIGN | 55 | 46 |
| | | CONTRACT NO. 70427 | | |
| | | ILLINOIS FED. AID PROJECT | | |

...\dgn\D570427-sht-XSSHT.dgn 12/16/2009 7:39:06 AM

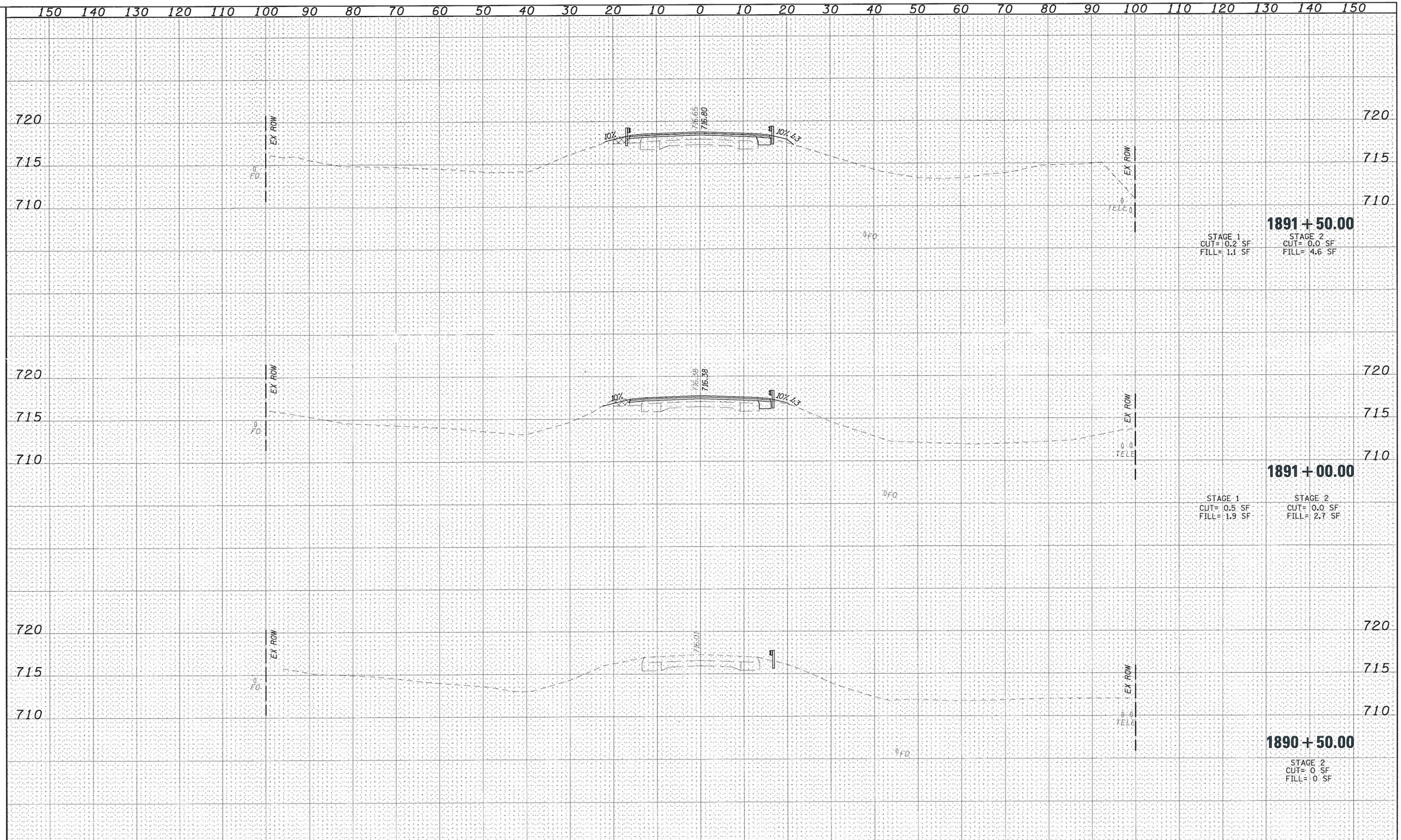


ORIGINAL SURVEY: SURVEYED / PLOTTED / TEMPLATE / AREAS / AREAS CHECKED — NOTE BOOK NO.

FINAL SURVEY: SURVEYED / PLOTTED / TEMPLATE / AREAS / AREAS CHECKED — NOTE BOOK NO.

HURST-ROSCHE ENGINEERS, INC.
HILLSBORO, ILLINOIS 62049
(217)532-5959 FAX (217)532-5212

HR HURST-ROSCHE ENGINEERS, INC.

| | | | |
|---|---|---|---|
| FILE NAME = t:\192-1239_wo*1_wildcat\dgn\D570427-sht-XSSHT.dgn | USER NAME = HURST-ROSCHE | DESIGNED - JJC | REVISED - |
| | | DRAWN - TWC | REVISED - |
| | PLOT SCALE = 20.0201 ' / IN. | CHECKED - MAR | REVISED - |
| | PLOT DATE = 12/16/2009 | DATE - 12-16-09 | REVISED - |

**STATE OF ILLINOIS**
**DEPARTMENT OF TRANSPORTATION**

**FAP 709 (US 136)**
**CROSS SECTIONS**

SCALE: | SHEET NO. OF SHEETS | STA. 1890+50.00 TO STA. 1891+50.00

| F.A.P. RTE. | SECTION | COUNTY | TOTAL SHEETS | SHEET NO. |
|---|---|---|---|---|
| 709 | (105BR)BR | CHAMPAIGN | 55 | 47 |
| | | CONTRACT NO. 70427 | | |
| | ILLINOIS | FED. AID PROJECT | | |

...\dgn\D570427-sht-XSSHT.dgn 12/16/2009 7:39:07 AM

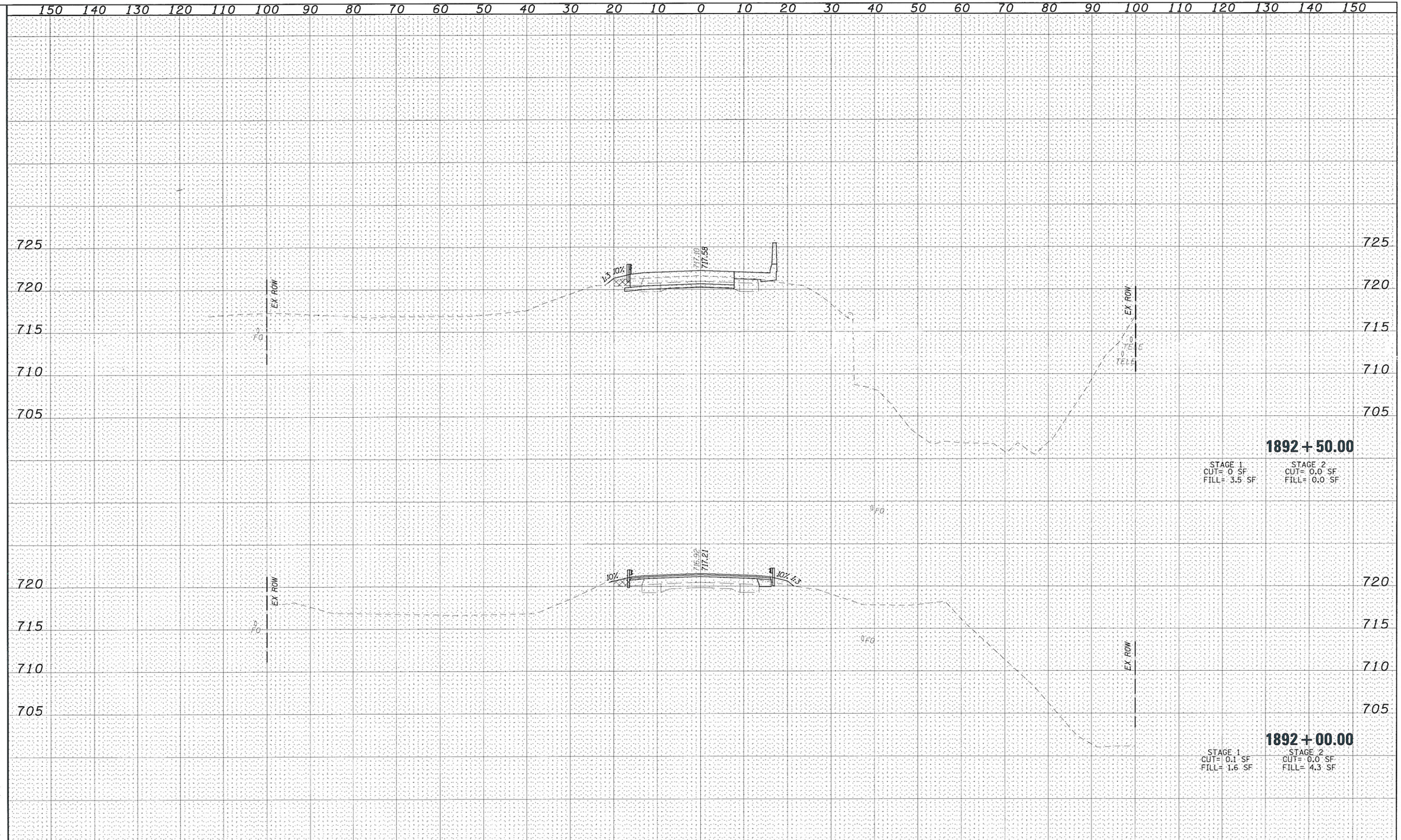


| ORIGINAL SURVEY | | |
|---|---|---|
| NOTE BOOK | SURVEYED | |
| | PLOTTED | |
| | TEMPLATE | |
| | AREAS | |
| NO. | AREAS CHECKED | |

| FINAL SURVEY | | |
|---|---|---|
| NOTE BOOK | SURVEYED | |
| | PLOTTED | |
| | TEMPLATE | |
| | AREAS | |
| NO. | AREAS CHECKED | |

HURST-ROSCHE ENGINEERS, INC.
HILLSBORO, ILLINOIS 62049
(217)532-3999 FAX (217)532-3212

HR HURST-ROSCHE ENGINEERS, INC.

| | | | |
|---|---|---|---|
| FILE NAME = t:\192-1239.wo*1_wildcat\dgn\D570427-sht-XSSHT.dgn | USER NAME = HURST-ROSCHE | DESIGNED - JJC | REVISED - |
| | | DRAWN - TWC | REVISED - |
| | PLOT SCALE = 22.0001 ' / IN. | CHECKED - MAR | REVISED - |
| | PLOT DATE = 12/16/2009 | DATE - 12-16-09 | REVISED - |

**STATE OF ILLINOIS**
**DEPARTMENT OF TRANSPORTATION**

**FAP 709 (US 136)**
**CROSS SECTIONS**

SCALE: | SHEET NO. OF SHEETS | STA. 1892+00.00 TO STA. 1892+50.00

| F.A.P. RTE. | SECTION | COUNTY | TOTAL SHEETS | SHEET NO. |
|---|---|---|---|---|
| 709 | (105BR)BR | CHAMPAIGN | 55 | 48 |
| | | CONTRACT NO. 70427 | | |
| | | ILLINOIS FED. AID PROJECT | | |

...\dgn\D570427-sht-XSSHT.dgn 12/16/2009 7:39:07 AM

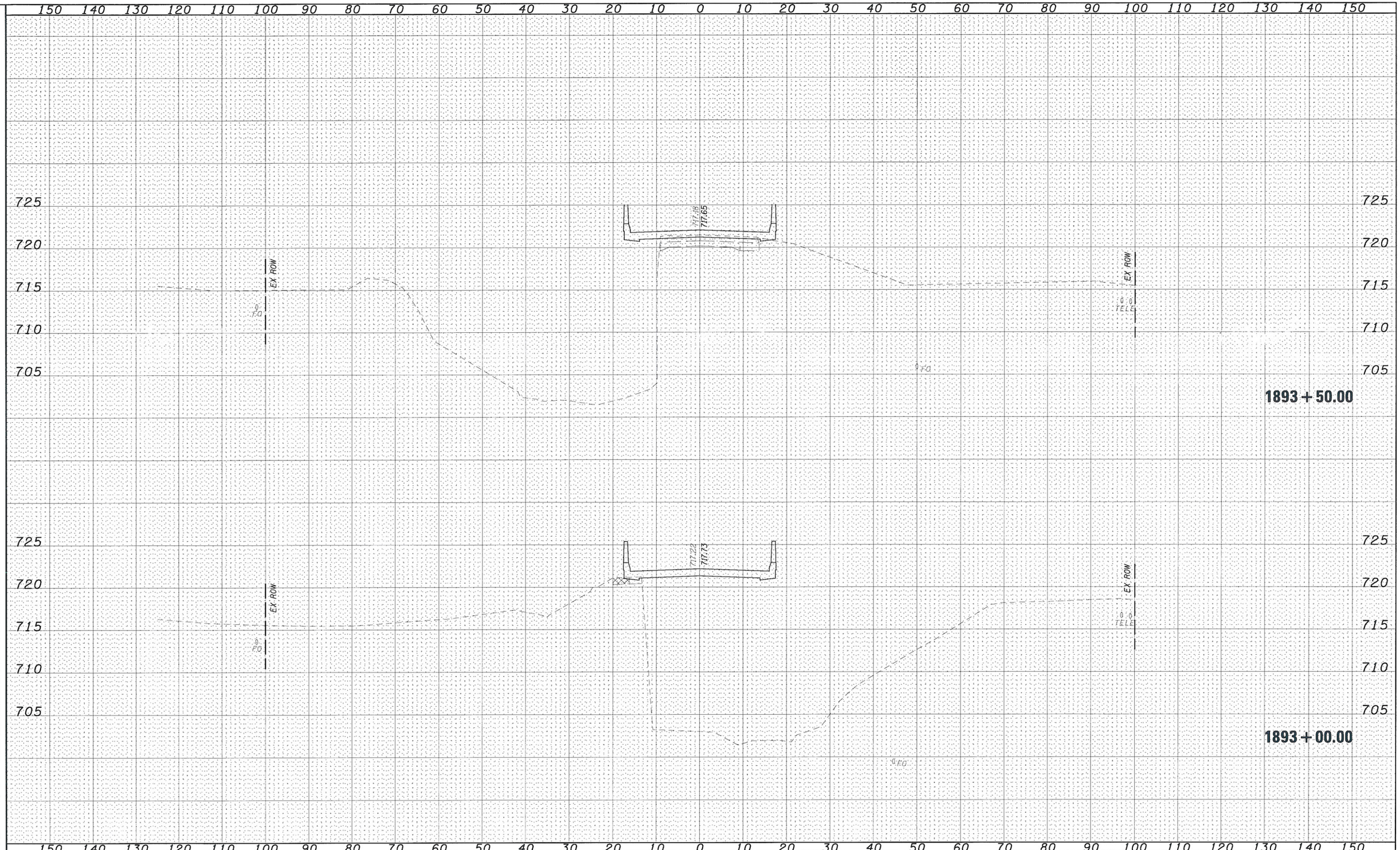


| | | | |
|---|---|---|---|
| FILE NAME = t:\192-1239_wo*1_=ildot\dgn\D570427-sht-XSSHT.dgn | USER NAME = HURST-ROSCHE | DESIGNED - JJC | REVISED - |
| | | DRAWN - TWC | REVISED - |
| | PLOT SCALE = 20.0000 ' / IN. | CHECKED - MAR | REVISED - |
| | PLOT DATE = 12/16/2009 | DATE - 12-16-09 | REVISED - |

**STATE OF ILLINOIS**
**DEPARTMENT OF TRANSPORTATION**

**FAP 709 (US 136)**
**CROSS SECTIONS**

SCALE: | SHEET NO. OF SHEETS | STA. 1893+00.00 TO STA. 1893+50.00

| F.A.P. RTE. | SECTION | COUNTY | TOTAL SHEETS | SHEET NO. |
|---|---|---|---|---|
| 709 | (105BR)BR | CHAMPAIGN | 55 | 49 |

**CONTRACT NO. 70427**

ILLINOIS FED. AID PROJECT

HURST-ROSCHE ENGINEERS, INC.
HILLSBORO, ILLINOIS 62049
(217)532-3959 FAX (217)532-3212

FINAL SURVEY: SURVEYED, PLOTTED, TEMPLATE, AREAS, AREAS CHECKED, NOTE BOOK, NO.

ORIGINAL SURVEY: SURVEYED, PLOTTED, TEMPLATE, AREAS, AREAS CHECKED, NOTE BOOK, NO.

...\dgn\D570427-sht-XSSHT.dgn 12/16/2009 7:39:07 AM

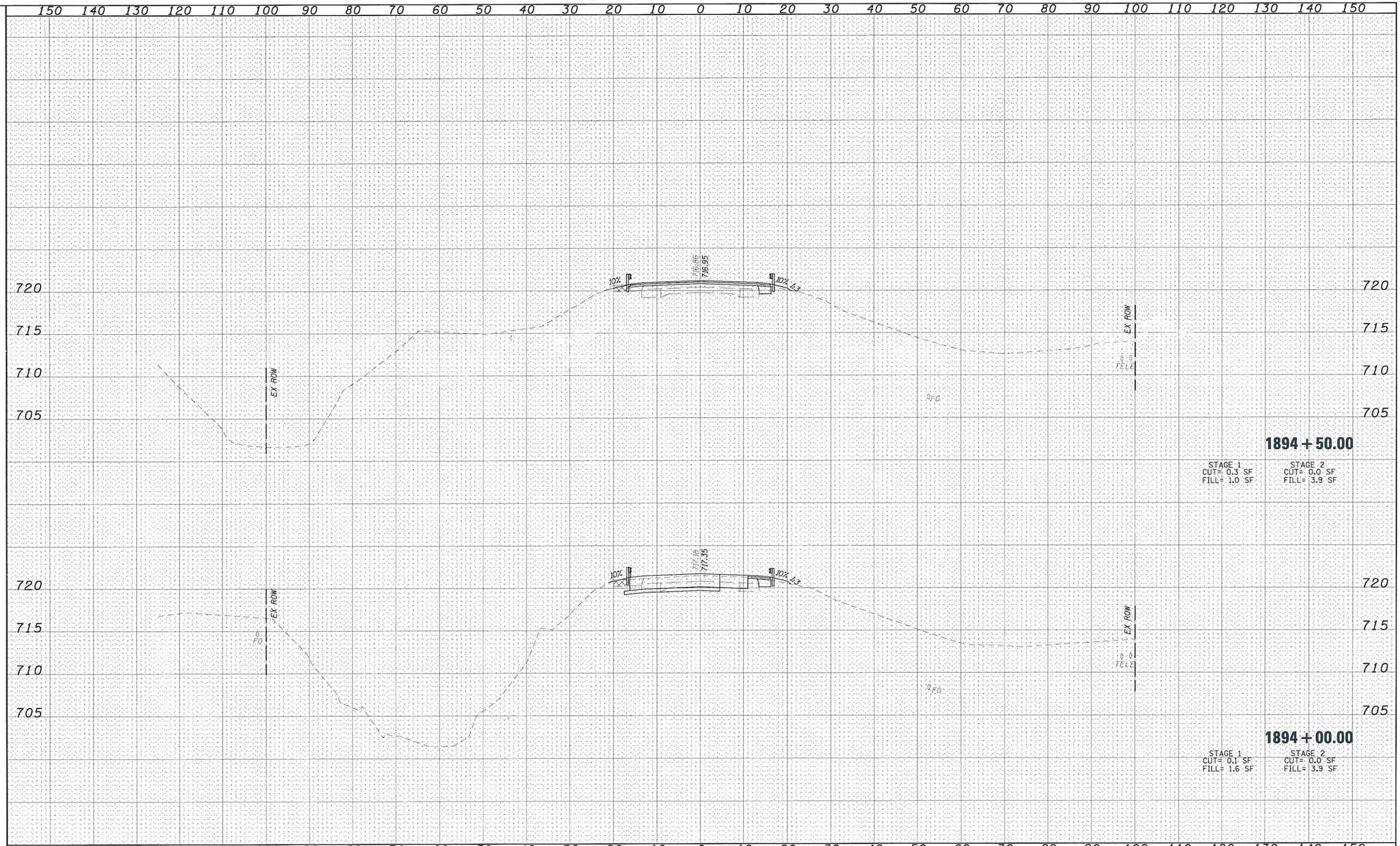


FINAL SURVEY: SURVEYED / PLOTTED / TEMPLATE / AREAS / AREAS CHECKED — NOTE BOOK NO.

ORIGINAL SURVEY: SURVEYED / PLOTTED / TEMPLATE / AREAS / AREAS CHECKED — NOTE BOOK NO.

HURST-ROSCHE ENGINEERS, INC.
HILLSBORO, ILLINOIS 62049
(217)532-3999 FAX (217)532-3212

HR — HURST-ROSCHE ENGINEERS, INC.

| | | | |
|---|---|---|---|
| FILE NAME = t:\190-1239_wo*1_w:ldot\dgn\D570427-sht-XSSHT.dgn | USER NAME = HURST-ROSCHE | DESIGNED - JJC | REVISED - |
| | | DRAWN - TWC | REVISED - |
| | PLOT SCALE = 20.0000 ' / IN. | CHECKED - MAR | REVISED - |
| | PLOT DATE = 12/16/2009 | DATE - 12-16-09 | REVISED - |

**STATE OF ILLINOIS**
**DEPARTMENT OF TRANSPORTATION**

**FAP 709 (US 136)**
**CROSS SECTIONS**

SCALE: SHEET NO. OF SHEETS STA. 1894+00.00 TO STA. 1894+50.00

| F.A.P. RTE. | SECTION | COUNTY | TOTAL SHEETS | SHEET NO. |
|---|---|---|---|---|
| 709 | (105BR)BR | CHAMPAIGN | 55 | 50 |
| | | CONTRACT NO. 70427 | | |

ILLINOIS FED. AID PROJECT

...\dgn\D570427-sht-XSSHT.dgn 12/16/2009 7:39:08 AM

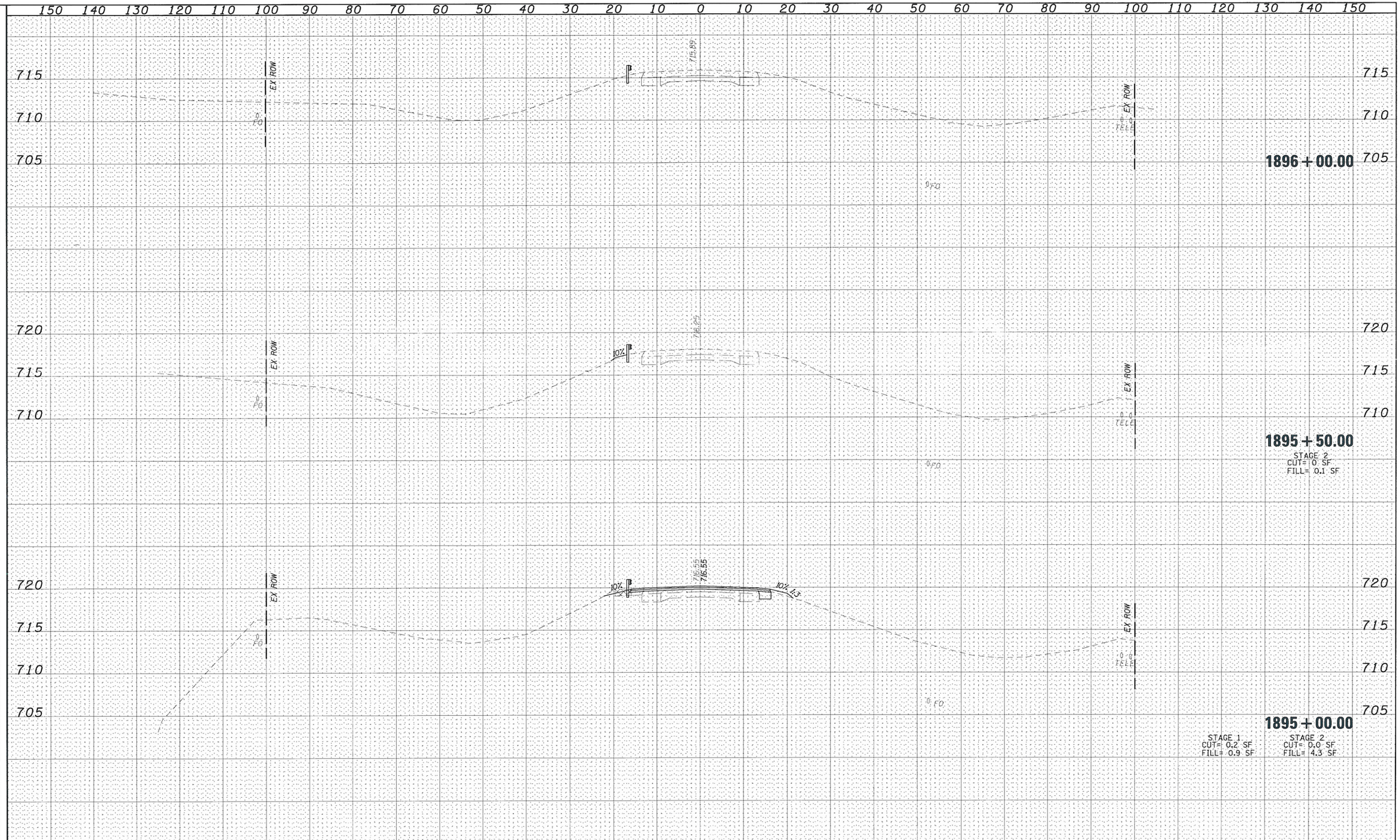


ORIGINAL SURVEY — SURVEYED / PLOTTED / TEMPLATE / AREAS / AREAS CHECKED — NOTE BOOK NO.

FINAL SURVEY — SURVEYED / PLOTTED / TEMPLATE / AREAS / AREAS CHECKED — NOTE BOOK NO.

HURST-ROSCHE ENGINEERS, INC.
1701 SOUTH FIRST STREET
CHAMPAIGN, ILLINOIS 61820
(217)352-3959 FAX (217)352-3212

HR HURST-ROSCHE ENGINEERS, INC.

| | | | |
|---|---|---|---|
| FILE NAME = t:\192-1239_wo#1_wildcat\dgn\D570427-sht-XSSHT.dgn | USER NAME = HURST-ROSCHE | DESIGNED - JJC | REVISED - |
| | | DRAWN - TWC | REVISED - |
| | PLOT SCALE = 20.0201 ' / IN. | CHECKED - MAR | REVISED - |
| | PLOT DATE = 12/16/2009 | DATE - 12-16-09 | REVISED - |

**STATE OF ILLINOIS**
**DEPARTMENT OF TRANSPORTATION**

**FAP 709 (US 136)**
**CROSS SECTIONS**

SCALE: | SHEET NO. OF SHEETS | STA. 1895+00.00 TO STA. 1896+00.00

| F.A.P. RTE. | SECTION | COUNTY | TOTAL SHEETS | SHEET NO. |
|---|---|---|---|---|
| 709 | (105BR)BR | CHAMPAIGN | 55 | 51 |

CONTRACT NO. 70427

ILLINOIS FED. AID PROJECT

...\dgn\D570427-sht-XSSHT.dgn 12/16/2009 7:39:08 AM

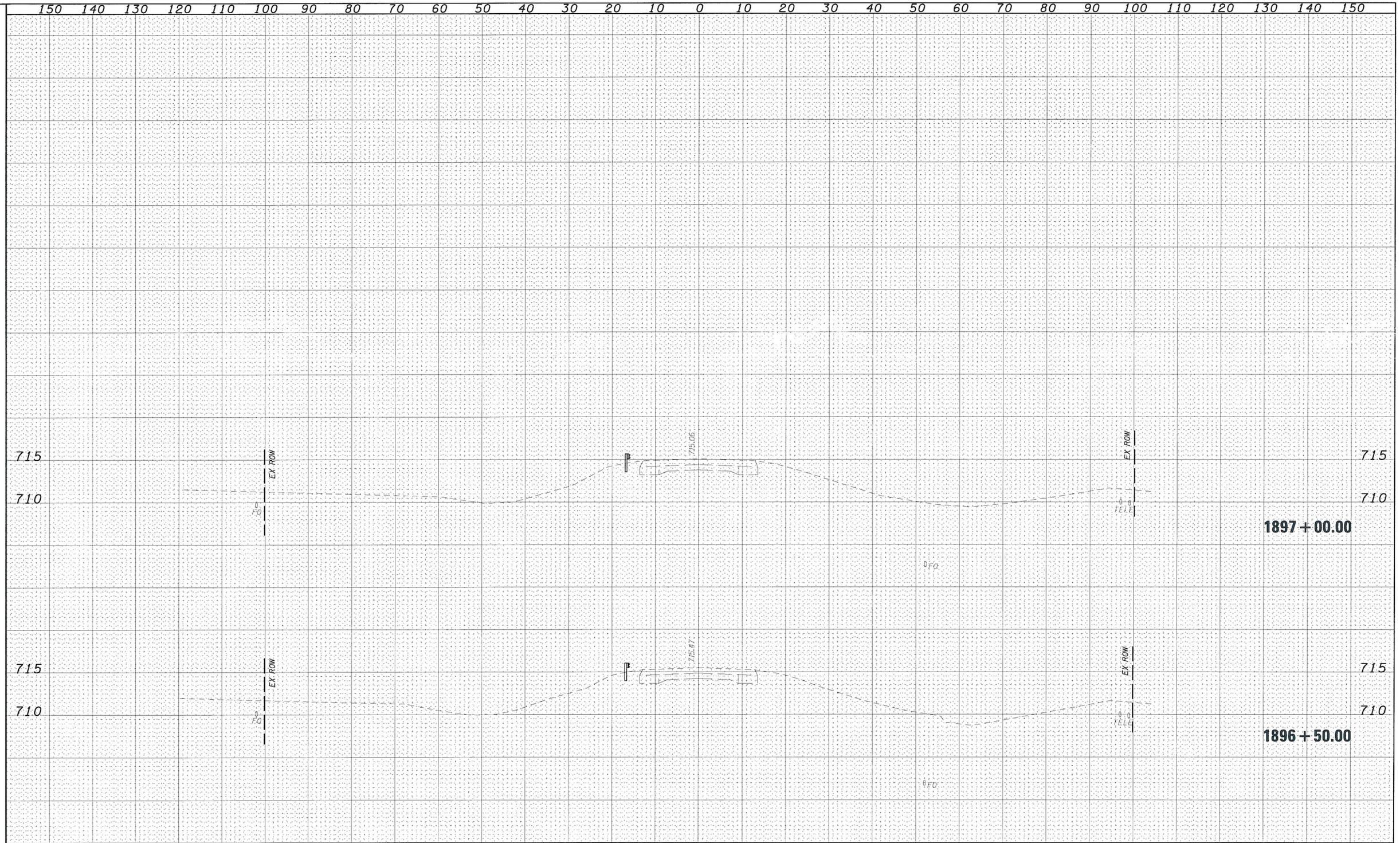


ORIGINAL SURVEY
NOTE BOOK NO.
SURVEYED
PLOTTED
TEMPLATE
AREAS
AREAS CHECKED

FINAL SURVEY
NOTE BOOK NO.
SURVEYED
PLOTTED
TEMPLATE
AREAS
AREAS CHECKED

| | | | |
|---|---|---|---|
| FILE NAME = t:\190-1239_wo*1_wildcat\dgn\D570427-sht-XSSHT.dgn | USER NAME = HURST-ROSCHE | DESIGNED - JJC | REVISED - |
| | | DRAWN - TWC | REVISED - |
| | PLOT SCALE = 20.0000 ' / IN. | CHECKED - MAR | REVISED - |
| | PLOT DATE = 12/16/2009 | DATE - 12-16-09 | REVISED - |

**STATE OF ILLINOIS**
**DEPARTMENT OF TRANSPORTATION**

**FAP 709 (US 136)**
**CROSS SECTIONS**

SCALE: | SHEET NO. OF SHEETS | STA. 1896+50.00 TO STA. 1897+00.00

| F.A.P. RTE. | SECTION | COUNTY | TOTAL SHEETS | SHEET NO. |
|---|---|---|---|---|
| 709 | (105BR)BR | CHAMPAIGN | 55 | 52 |

**CONTRACT NO. 70427**

ILLINOIS FED. AID PROJECT

...\dgn\D570427-sht-XSSHT.dgn 12/16/2009 7:39:08 AM

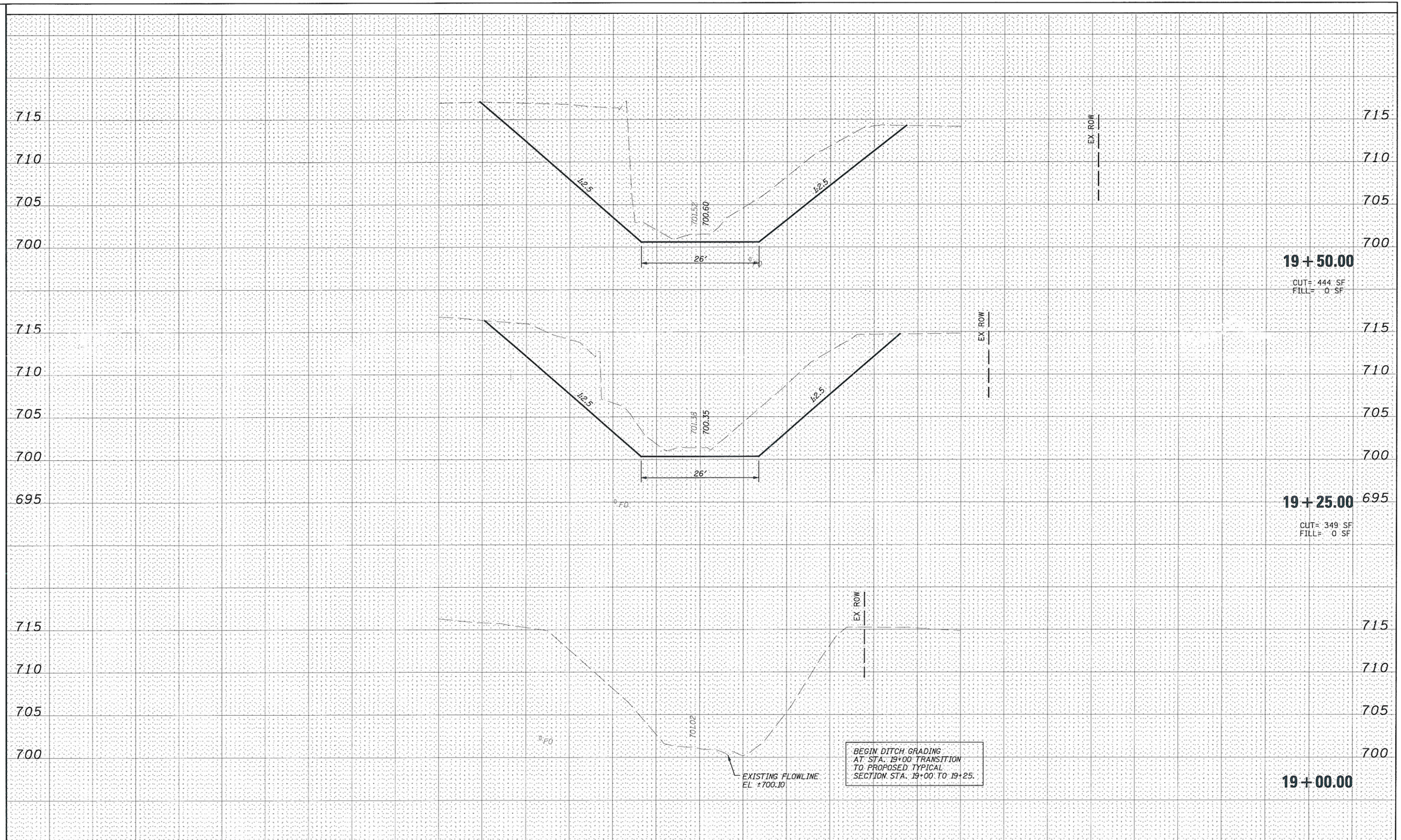


| ORIGINAL SURVEY | FINAL SURVEY |
|---|---|
| SURVEYED | SURVEYED |
| PLOTTED | PLOTTED |
| TEMPLATE | TEMPLATE |
| AREAS | AREAS |
| AREAS CHECKED | AREAS CHECKED |
| NOTE BOOK | NOTE BOOK |
| NO. | NO. |

HURST-ROSCHE ENGINEERS, INC.
2500 CORPORATE DRIVE, SUITE 200
(217)532-3999 FAX (217)532-3312

HR HURST-ROSCHE ENGINEERS, INC.

| | | | |
|---|---|---|---|
| FILE NAME = t:\190-1239_e*1_wildcat\dgn\D570427-sht-XSSHT2.dgn | USER NAME = HURST-ROSCHE | DESIGNED - JCC | REVISED - |
| | | DRAWN - TWC | REVISED - |
| | PLOT SCALE = 20.0021 ' / IN. | CHECKED - MAR | REVISED - |
| | PLOT DATE = 12/16/2009 | DATE - 12-16-09 | REVISED - |

**STATE OF ILLINOIS**
**DEPARTMENT OF TRANSPORTATION**

**WILDCAT SLOUGH DITCH**
**CROSS SECTIONS**

SCALE: | SHEET NO. 1 OF 3 SHEETS | STA. 19+00.00 TO STA. 19+50.00

| F.A.P. RTE. | SECTION | COUNTY | TOTAL SHEETS | SHEET NO. |
|---|---|---|---|---|
| 709 | (105BR)BR | CHAMPAIGN | 55 | 53 |

CONTRACT NO. 70427

ILLINOIS FED. AID PROJECT

...\dgn\D570427-sht-XSSHT2.dgn 12/16/2009 7:39:09 AM

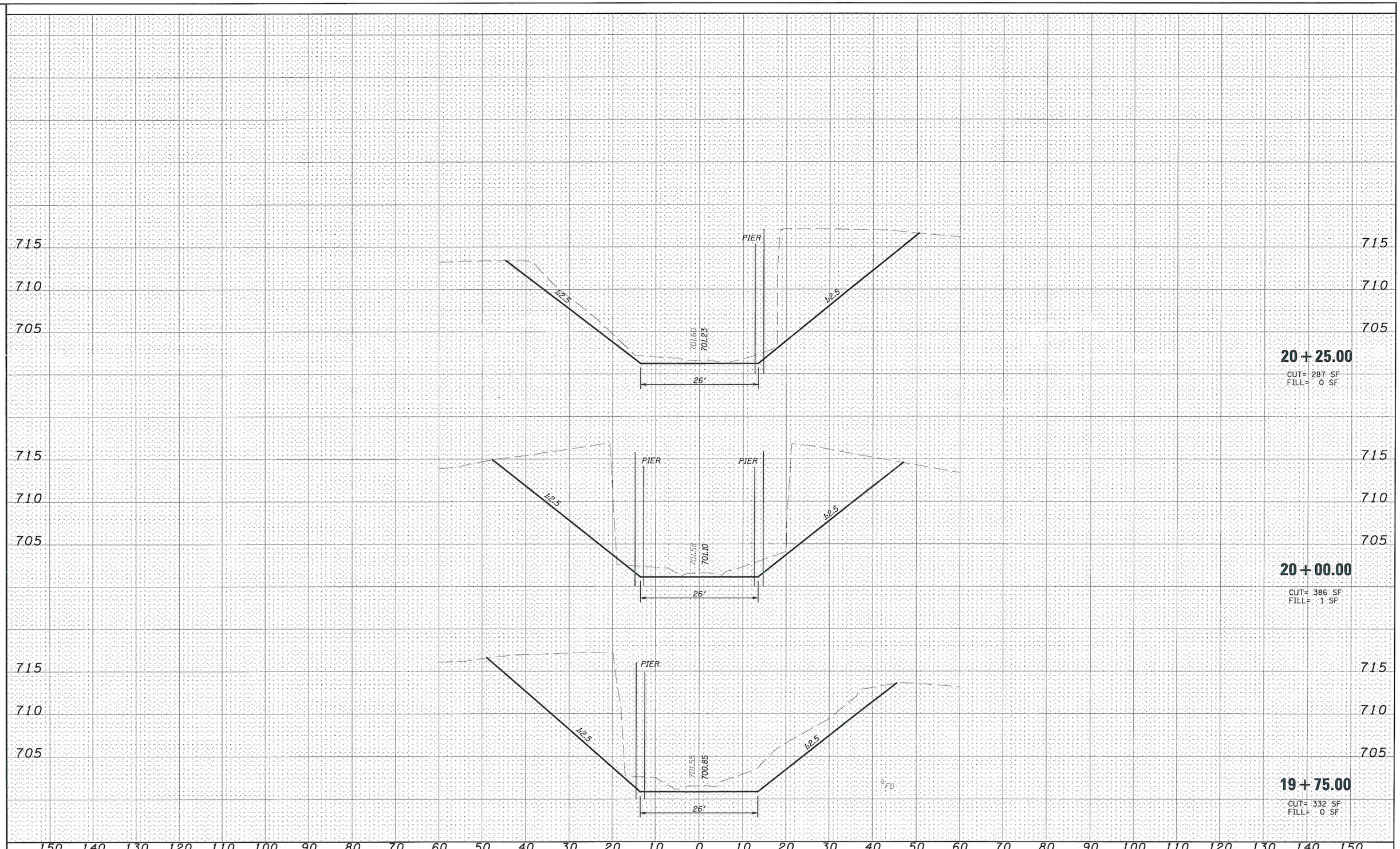


ORIGINAL SURVEY: SURVEYED / PLOTTED / TEMPLATE / AREAS / AREAS CHECKED — NOTE BOOK NO.

FINAL SURVEY: SURVEYED / PLOTTED / TEMPLATE / AREAS / AREAS CHECKED — NOTE BOOK NO.

HURST-ROSCHE ENGINEERS, INC.
HILLSBORO, ILLINOIS 62049
(217)532-3959 FAX (217)532-2312

HR HURST-ROSCHE ENGINEERS, INC.

| | | | |
|---|---|---|---|
| FILE NAME = t:\190-1239_wo*1_wildcat\dgn\D570427-sht-XSSHT2.dgn | USER NAME = HURST-ROSCHE | DESIGNED - JJC | REVISED - |
| | | DRAWN - TWC | REVISED - |
| | PLOT SCALE = 20.0000 ' / IN. | CHECKED - MAR | REVISED - |
| | PLOT DATE = 12/16/2009 | DATE - 12-16-09 | REVISED - |

**STATE OF ILLINOIS**
**DEPARTMENT OF TRANSPORTATION**

**WILDCAT SLOUGH DITCH**
**CROSS SECTIONS**

SCALE: | SHEET NO. 2 OF 3 SHEETS | STA. 19+75.00 TO STA. 20+25.00

| F.A.P. RTE. | SECTION | COUNTY | TOTAL SHEETS | SHEET NO. |
|---|---|---|---|---|
| 709 | (105BR)BR | CHAMPAIGN | 55 | 54 |

CONTRACT NO. 70427

ILLINOIS FED. AID PROJECT

...\dgn\D570427-sht-XSSHT2.dgn 12/16/2009 7:39:10 AM

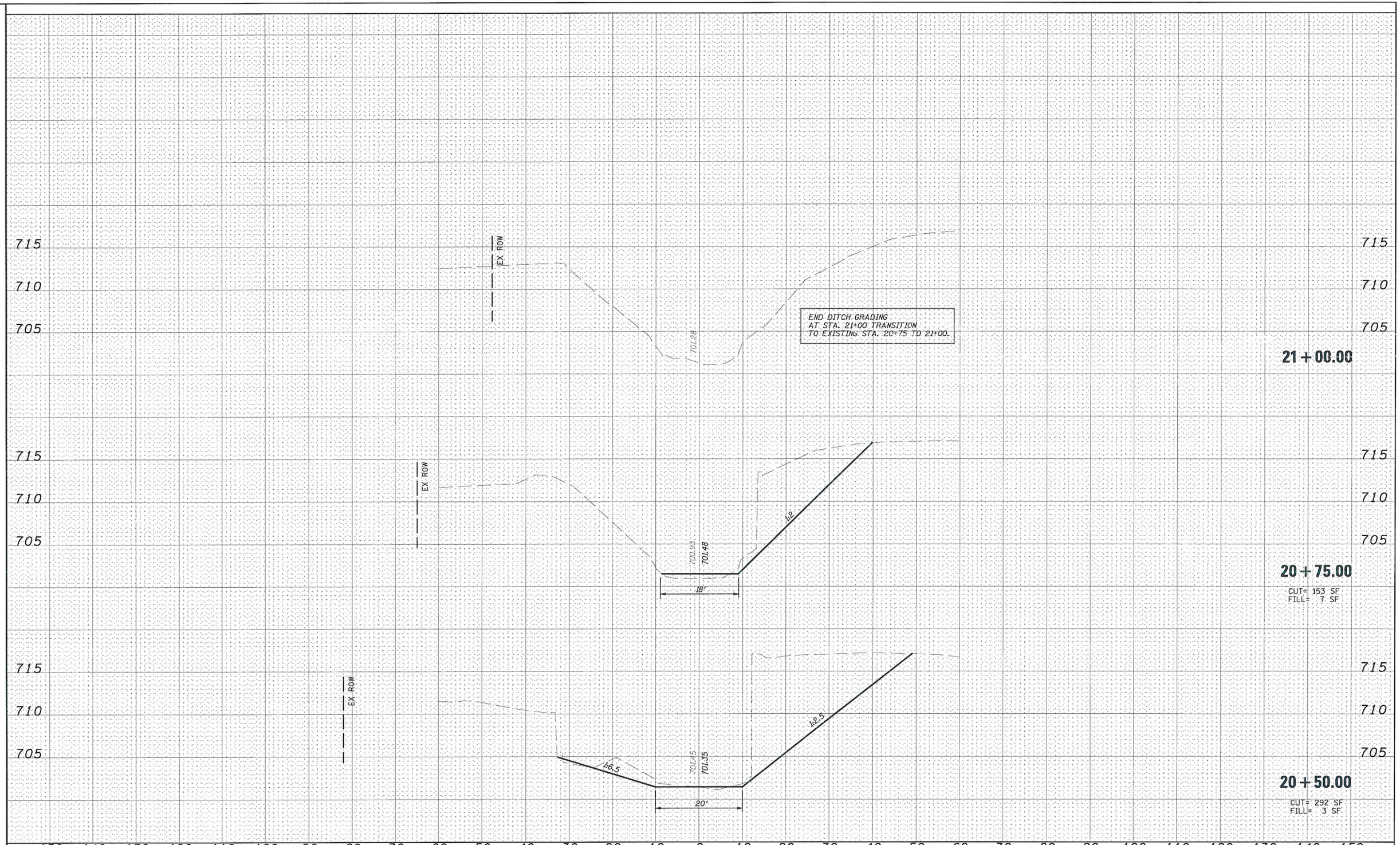


| | | | |
|---|---|---|---|
| FILE NAME = t:\190-1239_wo*1_wildcat\dgn\D570427-sht-XSSHT2.dgn | USER NAME = HURST-ROSCHE | DESIGNED - JJC | REVISED - |
| | | DRAWN - TWC | REVISED - |
| | PLOT SCALE = 20.0001 ' / IN. | CHECKED - MAR | REVISED - |
| | PLOT DATE = 12/16/2009 | DATE - 12-16-09 | REVISED - |

**STATE OF ILLINOIS**
**DEPARTMENT OF TRANSPORTATION**

**WILDCAT SLOUGH DITCH**
**CROSS SECTIONS**

SCALE: | SHEET NO. 3 OF 3 SHEETS | STA. 20+50.00 TO STA. 21+00.00

| F.A.P. RTE. | SECTION | COUNTY | TOTAL SHEETS | SHEET NO. |
|---|---|---|---|---|
| 709 | (105BR)BR | CHAMPAIGN | 55 | 55 |

CONTRACT NO. 70427

ILLINOIS FED. AID PROJECT

FINAL SURVEY: NOTE BOOK NO. — SURVEYED, PLOTTED, TEMPLATE, AREAS, AREAS CHECKED

ORIGINAL SURVEY: NOTE BOOK NO. — SURVEYED, PLOTTED, TEMPLATE, AREAS, AREAS CHECKED

HURST-ROSCHE ENGINEERS, INC.
HILL SHORE, ILLINOIS 62049
(217)532-3999 FAX (217)532-3212

...\dgn\D570427-sht-XSSHT2.dgn 12/16/2009 7:39:10 AM