F.A.I. RTE.	SECTION	COUNTY	TOTAL SHEETS	SHEET NO.
57	10-37RS-2&(10,27-38)RS-1	CHAMPAIGN	41	1
FED. ROAD DIST. NO.	ILLINOIS	CONTRACT NO. 70766		

3-5-10 LETTING ITEM 058

FOR INDEX OF SHEETS, SEE SHEET NO. 2
FOR SUMMARY OF QUANTITIES, SEE SHEET NO. 5–6

STRUCTURE INFORMATION

B-SMART REPAIR
S. N. 010-0082

HMA RESURFACING
(ADDITIONAL DEAD LOAD THICKNESS 1 1/2")
S. N. 010-0190
S. N. 010-8034
S. N. 010-8035
S. N. 010-8036
S. N. 010-8037
S. N. 010-8038
S. N. 010-8310

REPLACE WEARING SURFACE & MEMBRANE
S. N. 010-8311
S. N. 010-8312

STRUCTURE OVERHEAD OMISSIONS
S. N. 010-0161
S. N. 010-0162
S. N. 010-0163
S. N. 010-0189

CURRENT TRAFFIC DATA

CURRENT ADT	=	17,400 (2009)
20 YR ADT	=	27,200 (2029)
PU & PC %	=	64.4 (2009)
SU %	=	5.1 (2009)
MU %	=	30.5 (2009)

DESIGN DESIGNATION

INTERSTATE

0 100' 200' 300' — 1" = 100'
0 10' 20' 30' — 1" = 10'
0 50' 100' — 1" = 50'
0 50' 100' — 1" = 40'
0 50' 100' — 1" = 30'
0 50' 100' — 1" = 20'

FULL SIZE PLANS HAVE BEEN PREPARED USING STANDARD ENGINEERING SCALES. REDUCED SIZED PLANS WILL NOT CONFORM TO STANDARD SCALES. IN MAKING MEASUREMENTS ON REDUCED PLANS, THE ABOVE SCALES MAY BE USED.

J.U.L.I.E.
JOINT UTILITY LOCATION INFORMATION FOR EXCAVATION
1-800-892-0123
OR 811

PROJECT ENGINEER: KEVIN TRAPP
SQUAD LEADER: MATT BOWER
PHONE: (217)465-4181

CONTRACT NO. 70766

STATE OF ILLINOIS
DEPARTMENT OF TRANSPORTATION
DIVISION OF HIGHWAYS

PROPOSED HIGHWAY PLANS

F.A.I ROUTE 57 (I-57)
SECTION 10–37RS–2 & (10,27–38)RS–1

CHAMPAIGN COUNTY

C–95–023–09
US 136 AT RANTOUL TO FORD COUNTY LINE
RESURFACING (INT–2ND); IMPACT ATTENUATORS; BRIDGE JOINT REPAIR & WATERPROOFING

PROJECT ENDS
STATION 1649+71.37

PAVING OMISSION
SN 010-0192
1314+85.15 TO 1316+37.26 (SB)
SN 010-0191
1315+08.34 TO 1316+65.58 (NB)

PAVING OMISSION
SN 010-0012
1274+49.09 TO 1276+49.01 (SB)
SN 010-0013
1274+42.94 TO 1276+42.86 (NB)

PROJECT BEGINS
STATION 1270+24.74

R9E

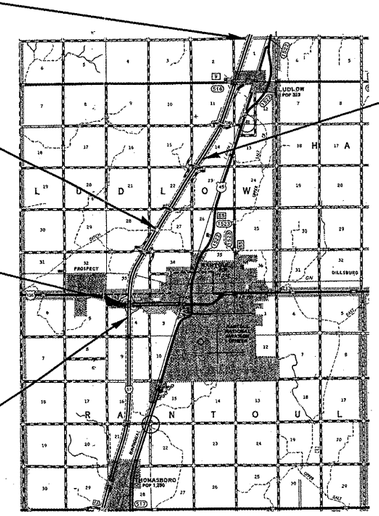

STATION EQUATION
1502+40.24 (BK) =
1502+35.17 (AH)

SCALE

TOTAL LENGTH OF SECTION & PROJECT = 37,951.70 FEET = 7.188 MILES
NET LENGTH OF SECTION & PROJECT = 37,594.54 FEET = 7.120 MILES

D–95–023–09

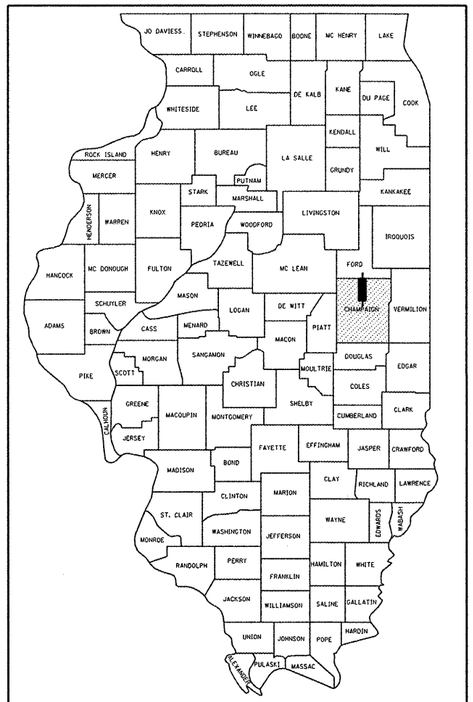

LOCATION OF SECTION INDICATED THUS:–

STATE OF ILLINOIS
DEPARTMENT OF TRANSPORTATION
DIVISION OF HIGHWAYS

SUBMITTED 12/03 20 09
Jesse E. Crowe
DEPUTY DIRECTOR OF HIGHWAYS, REGION THREE ENGINEER

January 29, 20 10
Scott E. Stitt P.E.
Acting ENGINEER OF DESIGN AND ENVIRONMENT

January 29, 20 10
Christine M. Reed
DIRECTOR OF HIGHWAYS, CHIEF ENGINEER

PRINTED BY THE AUTHORITY OF THE STATE OF ILLINOIS

c:\pw_work\PWIDOT\BOWERML\d0W0023\70766 COVER.dgn

INDEX OF SHEETS

SHEET NO.	DESCRIPTION
1	COVER SHEET
2	INDEX OF SHEETS / HIGHWAY STANDARDS
3-4	GENERAL NOTES
5-6	SUMMARY OF QUANTITIES
7-12	TYPICAL CROSS SECTIONS
13-19	SCHEDULE OF QUANTITIES
20	SCHEDULE OF PATCHING
21	LOCATION MAP FOR US 136 INTERCHANGE
22-27	DETAILS FOR MILLING TRANSITIONS
27	DETAIL FOR MEDIAN CROSSOVER
28-29	DETAILS FOR IMPACT ATTENUATORS
30	DETAIL FOR S.N. 010-8311& 010-8312
31-38	DETAILS FOR S.N. 010-0082
39	TRAFFIC CONTROL FOR RAMPS
40	DETAIL FOR TRAFFIC CONTROL & PROTECTION DEVICES (ROAD & SIDEROAD/STREET CLOSURES)
41	DETAIL FOR PAVEMENT MARKING (INTERSTATE & MULTI-LANE APPLICATIONS)

HIGHWAY STANDARDS

STANDARD NO.	DESCRIPTION
000001-05	STANDARD SYMBOLS, ABBREVIATIONS, AND PATTERNS
001006	DECIMAL OF AN INCH AND OF A FOOT
280001-05	TEMPORARY EROSION CONTROL SYSTEMS
420001-07	PAVEMENT JOINTS
442001-04	CLASS A PATCHES
482001-02	HMA SHOULDER ADJACENT TO FLEXIBLE PAVEMENT
482011-03	HMA SHOULDER STRIPS / SHOULDERS WITH RESURFACING OR WIDENING AND RESURFACING PROJECTS
642001-01	SHOULDER RUMBLE STRIPS
701101-02	OFF-ROAD OPERATIONS MULTILANE, 4.5m (15') TO 600mm (24") FROM PAVEMENT EDGE, FOR SPEEDS 45 MPH
701106-02	OFF-ROAD OPERATIONS, MULTILANE, MORE THAN 4.5m (15') AWAY
701400-04	APPROACH TO LANE CLOSURE, FREEWAY / EXPRESSWAY
701401-05	LANE CLOSURE, FREEWAY, EXPRESSWAY
701406-05	LANE CLOSURE, FREEWAY, EXPRESSWAY, DAY OPERATIONS ONLY
701411-06	LANE CLOSURE, MULTILANE, AT ENTRANCE OR EXIT RAMP FOR SPEEDS 45 MPH
701426-03	LANE CLOSURE, MULTILANE, INTERMITTENT OR MOVING OPERATIONS, FOR SPEEDS 45 MPH
701901-01	TRAFFIC CONTROL DEVICES
780001-02	TYPICAL PAVEMENT MARKINGS
781001-03	TYPICAL APPLICATIONS OF RAISED REFLECTIVE PAVEMENT MARKERS

BLR 21-8

G.N.-100

ENGLISH UNITS OF MEASUREMENT SHALL GOVERN OVER AND SUPERSEDE ANY METRIC UNITS SHOWN IN THIS CONTRACT. WHERE INCLUDED, METRIC UNITS ARE FOR INFORMATION ONLY.

G.N.-406

THE QUANTITIES INCLUDED IN THE PLANS FOR HOT-MIX ASPHALT RESURFACING ARE INTENDED TO GIVE THE COVERAGE SHOWN ON THE TYPICAL CROSS SECTIONS. IT IS NOT INTENDED TO INCREASE THE THICKNESS OF THE HOT-MIX ASPHALT MIXTURE IN ORDER TO USE ALL OF THE QUANTITIES INCLUDED IN THE CONTRACT.

G.N.-406.05b

THE FIRST (BOTTOM) LIFT OF SURFACE COURSE SHALL BE GIVEN A FOG COAT OF PRIME BEFORE THE FINAL SURFACE COURSE IS PLACED WHEN DIRECTED BY THE ENGINEER.

THE FOG COAT WILL BE PAID FOR AT THE CONTRACT UNIT PRICE PER GALLON FOR BITUMINOUS MATERIAL (PRIME COAT) AND NO ADDITIONAL COMPENSATION WILL BE ALLOWED.

G.N.-406.10
FOR MULTILANE RESURFACING

WHEN BEGINNING THE RESURFACING WITH NEW MIXTURES FOR LEVELING BINDER, BINDER COURSE, AND SURFACE COURSE MIXTURES, THE WORK WILL BE CONFINED TO THE INSIDE TRAFFIC LANE (PASSING LANE) FIRST. THE WORK WILL REMAIN ON THE INSIDE LANE UNTIL THE MIX HAS BEEN ADJUSTED AND APPROVED BY THE ENGINEER BEFORE ANY RESURFACING IS ALLOWED ON THE OUTSIDE (DRIVING) TRAFFIC LANE(S).

ANY DELAYS OR INCONVENIENCES CAUSED THE CONTRACTOR IN COMPLYING WITH THIS REQUIREMENT WILL BE CONSIDERED INCIDENTAL TO THE VARIOUS HOT-MIX ASHPALT PAY ITEMS, AS SHOWN IN THE CONTRACT, AND NO ADDITIONAL COMPENSATION WILL BE ALLOWED.

G.N.-406H

MIXTURE REQUIREMENTS

THE FOLLOWING MIXTURE REQUIREMENTS ARE APPLICABLE FOR THIS PROJECT:

Location		I-57		
Mixture Use	Polymer Surface (Bottom Lift)	Polymer Surface (Top Lift)	Shoulder Surface	Incidental
AC/PG	SBS PG 70-22	SBS PG 70-22	PG 58-22	PG 64-22
RAP % (Max)	10%	10%	See RAP Spec Provision	See RAP Spec Provision
Design Air Voids	4.0% @ Ndes=105	4.0% @ Ndes=105	4.0% @ Ndes=30	4.0% @ Ndes=50
Mix Comp(Gradation)	IL 9.5	IL 9.5	IL 9.5L	IL 9.5
Friction Aggregate	Mix C	Mix D	Mix C	Mix C

G.N.-442B – PATCHING SCHEDULES

THE PATCHING SCHEDULES INCLUDED IN THE PLANS REPRESENT THE BEST INFORMATION AVAILABLE AT THE TIME OF COMPLETION OF THE PLANS FOR LETTING. VARIATIONS IN LOCATION AND SIZES OF BOTH FULL-DEPTH AND PARTIAL-DEPTH PATCHES MAY OCCUR.

G.N.-482
ALL MATERIAL PLACED AS HOT-MIX ASPHALT SHOULDERS SHALL BE COMPACTED TO 94.0 TO 98.4 PERCENT OF THE MAXIMUM THEORETICAL DENSITY. THIS REQUIREMENT SHALL APPLY TO IL 9.5L GRADATION SHOULDER MIXES AND OTHER MIXES (BOTTOM LIFT OF SHOULDERS). THIS MAXIMUM DENSITY SHALL BE DETERMINED FROM THE MOVING AVERAGE OF FOUR TESTS AS IN OTHER QC/QA TESTING. A NUCLEAR GAUGE DENSITY/CORE CORRELATION SHALL BE PERFORMED FOR THE IL 9.5L MIXES AND OTHER MIXES USING STANDARD CORRELATION PROCEDURES.

G.N.-703A

SHORT TERM PAVEMENT MARKING SHALL BE APPLIED TO THE PAVEMENT AFTER ANY OF THE FOLLOWING: COLD MILLING AND/OR PLACING BITUMINOUS MATERIALS (PRIME COAT), LEVELING BINDER (MACHINE METHOD), BINDER AND SURFACE COURSES. SHORT TERM PAVEMENT MARKING PLACED ON THE SURFACE, SHALL COINCIDE WITH THE FINAL PAVEMENT STRIPING. SHORT TERM PAVEMENT MARKING PLACED PRIOR TO THE SURFACE SHALL COINCIDE WITH THE EXISTING PAVEMENT MARKINGS. USE 4 FEET PER 40 FEET (OR 10% PER STATION).

G.N.-781

DOUBLE RAISED REFLECTIVE PAVEMENT MARKERS SHALL BE PLACED ON ALL MULTI-LANE DIVIDED HIGHWAYS. THE LOCATION OF THE REFLECTIVE PAVEMENT MARKERS WILL BE IN ACCORDANCE WITH STANDARD 781001, AND THE DETAILS SHOWN IN THE PLANS. IF THERE IS ANY DISCREPANCY BETWEEN THE STANDARD AND THE DETAILS IN THE PLANS, THE DETAILS IN THE PLANS SHALL GOVERN. THE FINAL PAVEMENT MARKINGS SHALL BE IN PLACE PRIOR TO PLACING THE RAISED REFLECTIVE PAVEMENT MARKERS AND THE RAISED REFLECTIVE PAVEMENT MARKERS SHALL BE PLACED MIDWAY IN THE 30 FOOT (9 m) SPACE BETWEEN THE DASHED CENTERLINE STRIPES (WHEN APPLICABLE).

G.N.-1004.01

COARSE AGGREGATE GRADATION CA-10 MAY BE USED WHENEVER COARSE AGGREGATE CA-6 IS SPECIFIED IN THE STANDARD SPECIFICATIONS.

NO COMMITMENTS

BASED ON STRUCTURAL ANALYSIS THE FOLLOWING SHOULD BE NOTED WITH REGARDS TO MTD DEVICES TRAVELING OVER EXISTING STRUCTURES:

ONLY AN EMPTY MTD MAY PASS OVER THE FOLLOWING STRUCTURES:

010-0012 010-0013 010-0190 010-0191 010-0192 010-8034 010-8035
010-8036 010-8037 010-8038 010-8310 010-8311 010-8312

SHEET 2 OF 2

	LOCATION OF WORK:			FAI 57 URBAN CHAMPAIGN COUNTY STA 1270+24.74 TO STA 1292+37.60 100% STATE	FAI 57 RURAL CHAMPAIGN COUNTY STA 1292+37.60 TO STA 1649+71.37 100% STATE	FAI 57 RURAL CHAMPAIGN COUNTY IMPACT ATTENUATOR IMPROVEMENTS 100% STATE	FAI 57 RURAL CHAMPAIGN COUNTY S.N. 010-0082 100% STATE	FAI 57 RURAL CHAMPAIGN COUNTY S.N. 010-8311 S.N. 010-8312 100% STATE
	CONSTRUCTION TYPE CODE:			I000	I000	SFTY-3N	SFTY-2A	SFTY-2A
CODE NO	ITEM	UNIT	TOTAL QUANTITY	QUANTITY	QUANTITY	QUANTITY	QUANTITY	QUANTITY
X4420118	CLASS A PATCH (SPECIAL)	SQ YD	246.0	46.0	200.0	0.0	0.0	0.0
40600100	BITUMINOUS MATERIALS (PRIME COAT)	GALLON	32180.0	1654.0	30526.0	0.0	0.0	0.0
40600300	AGGREGATE (PRIME COAT)	TON	644.0	34.0	610.0	0.0	0.0	0.0
40600895	CONSTRUCTING TEST STRIP	EACH	2.0	1.0	1.0	0.0	0.0	0.0
40600982	HOT-MIX ASPHALT SURFACE REMOVAL - BUTT JOINT	SQ YD	1755.0	1172.0	583.0	0.0	0.0	0.0
40600990	TEMPORARY RAMP	SQ YD	3275.0	187.0	3088.0	0.0	0.0	0.0
40603525	POLYMERIZED HOT-MIX ASPHALT SURFACE COURSE, MIX "C", N105	TON	16875.0	902.0	15958.0	0.0	0.0	15.0
40603550	POLYMERIZED HOT-MIX ASPHALT SURFACE COURSE, MIX "D", N105	TON	17166.0	902.0	16249.0	0.0	0.0	15.0
40800010	BITUMINOUS MATERIALS (PRIME COAT)	GALLON	22.0	0.0	22.0	0.0	0.0	0.0
40800030	AGGREGATE (PRIME COAT)	TON	1.0	0.0	1.0	0.0	0.0	0.0
40800050	INCIDENTAL HOT-MIX ASPHALT SURFACING	TON	25.0	0.0	25.0	0.0	0.0	0.0
44000155	HOT-MIX ASPHALT SURFACE REMOVAL, 1 1/2"	SQ YD	203342.0	10736.0	192606.0	0.0	0.0	0.0
44000159	HOT-MIX ASPHALT SURFACE REMOVAL, 2 1/2"	SQ YD	1067.0	0.0	1067.0	0.0	0.0	0.0
44000162	HOT-MIX ASPHALT SURFACE REMOVAL, 3 1/4"	SQ YD	4267.0	0.0	4267.0	0.0	0.0	0.0
44000915	HOT-MIX ASPHALT SURFACE REMOVAL (DECK)	SQ YD	175.5	0.0	0.0	0.0	0.0	175.5
44200553	CLASS A PATCHES, TYPE II, 10 INCH	SQ YD	221.0	0.0	221.0	0.0	0.0	0.0
44213000	PATCHING REINFORCEMENT	SQ YD	467.0	46.0	421.0	0.0	0.0	0.0
44213200	SAW CUTS	FOOT	2910.0	288.0	2622.0	0.0	0.0	0.0
48101200	AGGREGATE SHOULDERS, TYPE B	TON	3519.0	201.0	3318.0	0.0	0.0	0.0
48203100	HOT-MIX ASPHALT SHOULDERS	TON	10040.0	572.0	9468.0	0.0	0.0	0.0
50157300	PROTECTIVE SHIELD	SQ YD	250.0	0.0	0.0	0.0	250.0	0.0
50500405	FURNISHING AND ERECTING STRUCTURAL STEEL	POUND	1410.0	0.0	0.0	0.0	1410.0	0.0
50500715	JACK AND REMOVE EXISTING BEARINGS	EACH	8.0	0.0	0.0	0.0	8.0	0.0
52100010	ELASTOMERIC BEARING ASSEMBLY, TYPE I	EACH	8.0	0.0	0.0	0.0	8.0	0.0
52100520	ANCHOR BOLTS, 1"	EACH	16.0	0.0	0.0	0.0	16.0	0.0
60260100	INLETS TO BE ADJUSTED	EACH	2.0	2.0	0.0	0.0	0.0	0.0
63400105	GUARD POSTS	EACH	50.0	0.0	50.0	0.0	0.0	0.0
63400205	GUARD POSTS REMOVAL	EACH	37.0	0.0	37.0	0.0	0.0	0.0

		LOCATION OF WORK:			FAI 57 URBAN CHAMPAIGN COUNTY STA 1270+24.74 TO STA 1292+37.60 100% STATE	FAI 57 RURAL CHAMPAIGN COUNTY STA 1292+37.60 TO STA 1649+71.37 100% STATE	FAI 57 RURAL CHAMPAIGN COUNTY IMPACT ATTENUATOR IMPROVEMENTS 100% STATE	FAI 57 RURAL CHAMPAIGN COUNTY S.N. 010-0082 100% STATE	FAI 57 RURAL CHAMPAIGN COUNTY S.N. 010-8311 S.N. 010-8312 100% STATE
		CONSTRUCTION TYPE CODE:			I000	I000	SFTY-3N	SFTY-2A	SFTY-2A
	CODE NO	ITEM	UNIT	TOTAL QUANTITY	QUANTITY	QUANTITY	QUANTITY	QUANTITY	QUANTITY
	64200105	SHOULDER RUMBLE STRIP	FOOT	148083.0	8441.0	139642.0	0.0	0.0	0.0
	67000400	ENGINEER'S FIELD OFFICE, TYPE A	CAL MO	6.0	1.0	5.0	0.0	0.0	0.0
	67100100	MOBILIZATION	L SUM	1.0	0.0	1.0	0.0	0.0	0.0
	70100420	TRAFFIC CONTROL AND PROTECTION, STANDARD 701411	EACH	4.0	4.0	0.0	0.0	0.0	0.0
	70100700	TRAFFIC CONTROL AND PROTECTION, STANDARD 701406	L SUM	1.0	0.0	1.0	0.0	0.0	0.0
	70100800	TRAFFIC CONTROL AND PROTECTION, STANDARD 701401	L SUM	1.0	0.0	1.0	0.0	0.0	0.0
	70103815	TRAFFIC CONTROL SURVEILLANCE	CAL DA	3.0	1.0	2.0	0.0	0.0	0.0
	70300100	SHORT-TERM PAVEMENT MARKING	FOOT	40523.0	2212.0	38311.0	0.0	0.0	0.0
	70300220	TEMPORARY PAVEMENT MARKING - LINE 4"	FOOT	150156.0	8559.0	141597.0	0.0	0.0	0.0
	70301000	WORK ZONE PAVEMENT MARKING REMOVAL	SQ FT	4469.0	255.0	4214.0	0.0	0.0	0.0
*	78000200	THERMOPLASTIC PAVEMENT MARKING - LINE 4"	FOOT	150156.0	8559.0	141597.0	0.0	0.0	0.0
*	78000500	THERMOPLASTIC PAVEMENT MARKING - LINE 8"	FOOT	2196.0	2196.0	0.0	0.0	0.0	0.0
*	78003110	PREFORMED PLASTIC PAVEMENT MARKING, TYPE B - LINE 4"	FOOT	18787.0	1071.0	17716.0	0.0	0.0	0.0
*	78100100	RAISED REFLECTIVE PAVEMENT MARKER	EACH	1992.0	114.0	1878.0	0.0	0.0	0.0
	78300200	RAISED REFLECTIVE PAVEMENT MARKER REMOVAL	EACH	1992.0	114.0	1878.0	0.0	0.0	0.0
	X0321468	PLUG EXISTING DECK DRAINS	EACH	12.0	0.0	0.0	0.0	12.0	0.0
	X0322121	SHEET WATERPROOFING MEMBRANE SYSTEM	SQ YD	175.5	0.0	0.0	0.0	0.0	175.5
	X0322729	MATERIAL TRANSFER DEVICE	TON	34011.0	1803.0	32208.0	0.0	0.0	0.0
	X0322932	SILICONE JOINT SEALER, 1.5"	FOOT	75.3	0.0	0.0	0.0	75.3	0.0
	X0323583	SPEED INDICATOR SIGN	CAL DA	60.0	3.0	57.0	0.0	0.0	0.0
	X7015005	CHANGEABLE MESSAGE SIGN	CAL DA	28.0	2.0	26.0	0.0	0.0	0.0
	Z0016002	DECK SLAB REPAIR (FULL DEPTH, TYPE II)	SQ YD	10.4	0.0	0.0	0.0	10.4	0.0
	Z0016200	DECK SLAB REPAIR (PARTIAL)	SQ YD	68.3	0.0	0.0	0.0	68.3	0.0
*	Z0030150	IMPACT ATTENUATORS (NON-REDIRECTIVE), TEST LEVEL 3	EACH	10.0	0.0	0.0	10.0	0.0	0.0

* SPECIALTY ITEMS

① EXISTING TYPICAL CROSS SECTION

INTERSTATE 57

STATION	TO	STATION
② NB 1272+95.98		1274+42.94
NB 1276+42.86		1296+95.45 ③
SB 1270+24.74		1274+49.09
SB 1276+49.01		1277+55.76 ②
② SB 1289+18.11		1296+95.45 ③

BRIDGE OMISSION
NB STA. 1274+42.94 TO 1276+42.86 (S.N. 010-0013)
SB STA. 1274+49.09 TO 1276+49.01 (S.N. 010-0012)

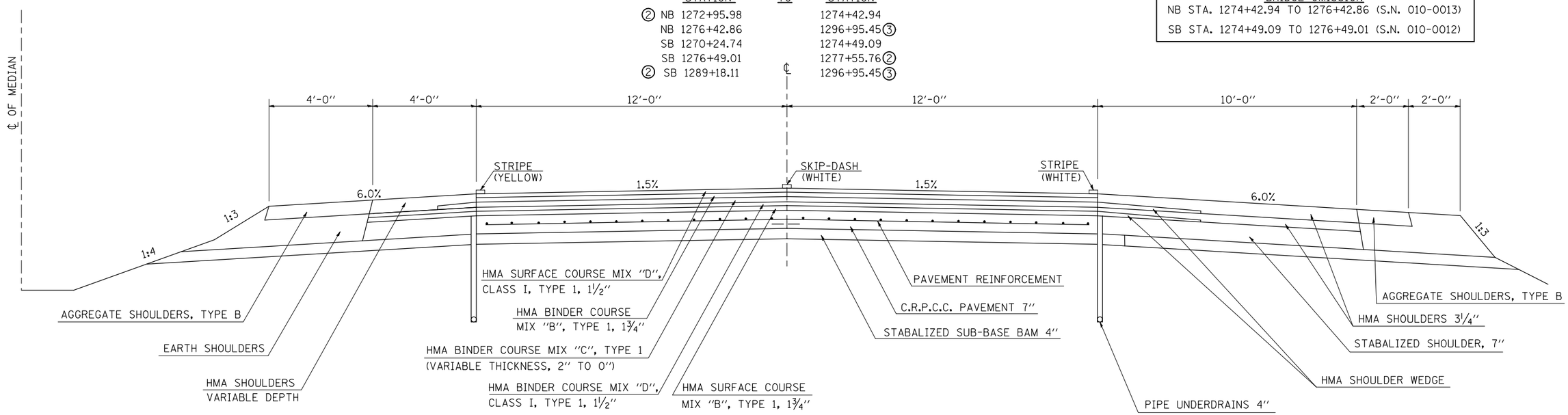

② EXISTING TYPICAL CROSS SECTION

INTERSTATE 57

STATION	TO	STATION
NB 1270+24.74		1272+95.98 ①
③ NB 1306+28.42		1308+15.60 ④
④ NB 1320+16.32		1321+36.77 ③
① SB 1277+55.76		1289+18.11 ①
③ SB 1310+21.22		1311+29.34 ④
④ SB 1323+29.41		1325+17.36 ③

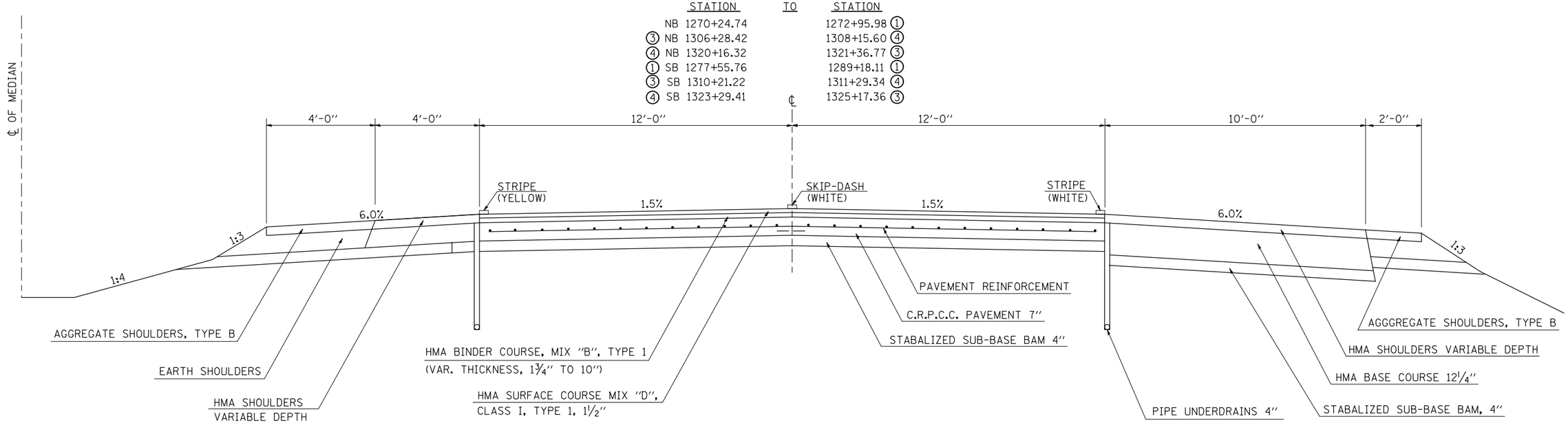

FILE NAME = c:\pw_work\pwidot\bowerml\d0110023\70766-sht-typical.dgn	USER NAME = bowerml	DESIGNED - MLB	REVISED -
		DRAWN - MLB	REVISED -
	PLOT SCALE = 40.0000 ' / IN.	CHECKED - MLB	REVISED -
	PLOT DATE = 12/2/2009	DATE - 01/21/09	REVISED -

STATE OF ILLINOIS
DEPARTMENT OF TRANSPORTATION

EXISTING TYPICAL CROSS SECTIONS

SCALE: N/A | SHEET NO. OF SHEETS | STA. TO STA.

F.A.I. RTE.	SECTION	COUNTY	TOTAL SHEETS	SHEET NO.
57	10-37RS-2&(10,27-38)RS-1	CHAMPAIGN	41	7
		CONTRACT NO. 70766		
		ILLINOIS FED. AID PROJECT		

③ EXISTING TYPICAL CROSS SECTION

INTERSTATE 57

STATION	TO	STATION
① NB 1296+95.45		1306+28.42 ②
④ NB 1314+67.36		1315+08.34
NB 1316+65.58		1317+07.36 ④
② NB 1321+36.77		1336+77.99 ⑤
① SB 1296+95.45		1310+21.22 ②
④ SB 1314+43.67		1314+85.15
SB 1316+32.26		1316+78.31 ④
② SB 1325+17.36		1336+77.99 ⑤

BRIDGE OMISSION
NB STA. 1315+08.34 TO 1316+65.58 (S.N. 010-0191)
SB STA. 1314+85.15 TO 1316+37.26 (S.N. 010-0192)

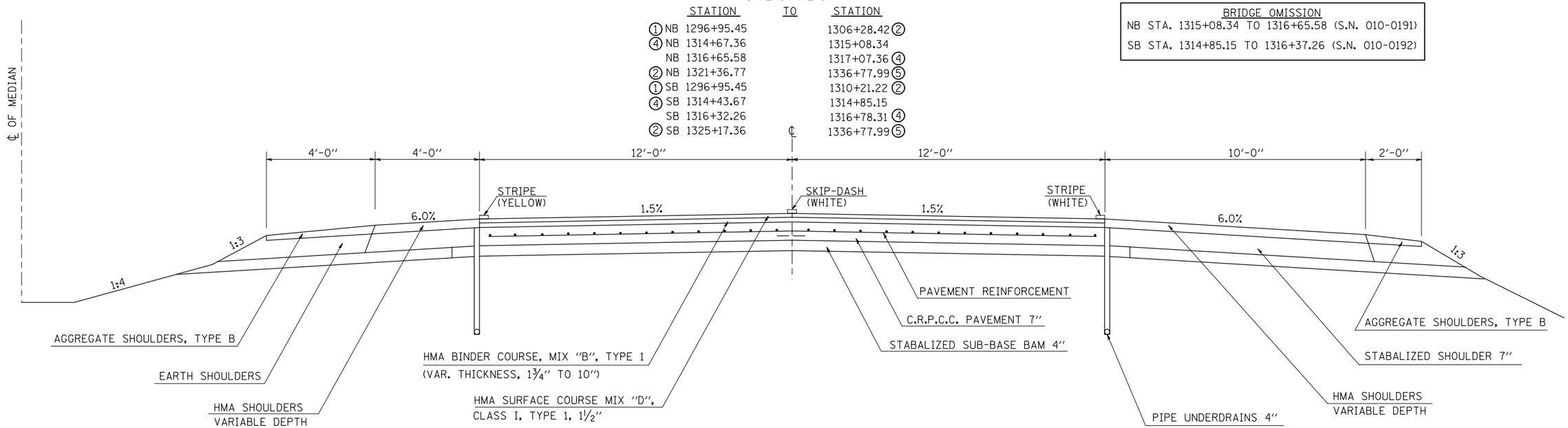

④ EXISTING TYPICAL CROSS SECTION

INTERSTATE 57

STATION	TO	STATION
② NB 1308+15.60		1314+67.36 ③
③ NB 1317+07.36		1320+16.32 ②
② SB 1311+29.34		1314+43.67 ③
③ SB 1316+78.31		1323+29.41 ②

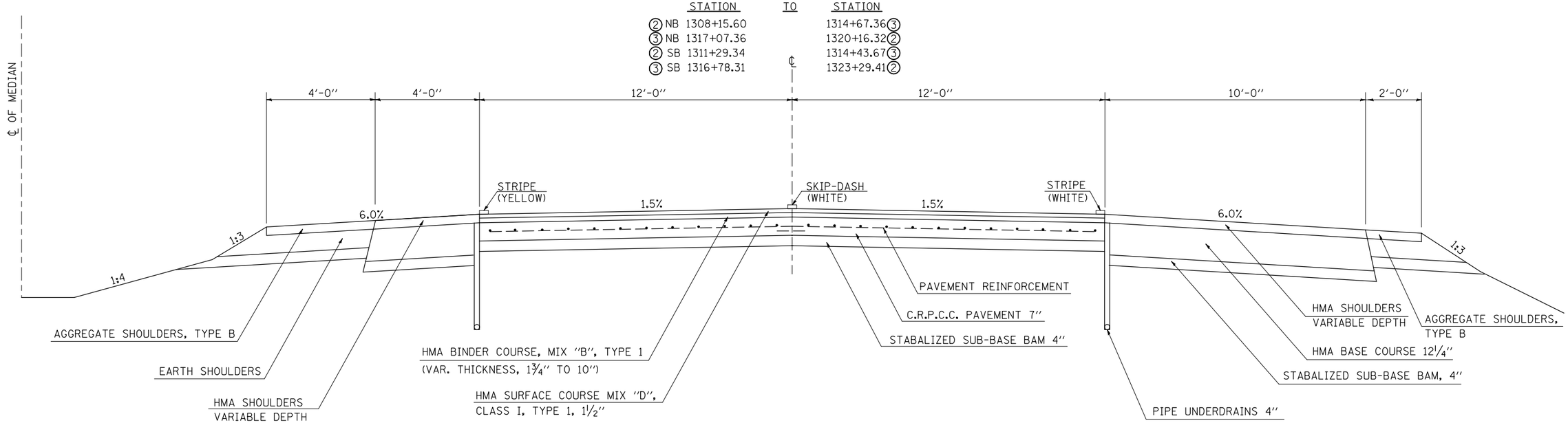

FILE NAME = c:\pw_work\pwidot\bowerml\d0110023\70766-sht-typical.dgn	USER NAME = bowerml	DESIGNED - MLB	REVISED -
		DRAWN - MLB	REVISED -
	PLOT SCALE = 40.0000 ' / IN.	CHECKED - MLB	REVISED -
	PLOT DATE = 12/2/2009	DATE - 01/21/09	REVISED -

STATE OF ILLINOIS
DEPARTMENT OF TRANSPORTATION

EXISTING TYPICAL CROSS SECTIONS

SCALE: N/A | SHEET NO. OF SHEETS | STA. TO STA.

F.A.I. RTE.	SECTION	COUNTY	TOTAL SHEETS	SHEET NO.
57	10-37RS-2&(10,27-38)RS-1	CHAMPAIGN	41	8

CONTRACT NO. 70766

ILLINOIS FED. AID PROJECT

⑤ EXISTING TYPICAL CROSS SECTION

INTERSTATE 57

	STATION	TO	STATION
③	NB 1336+77.99		1502+40.24(BK)
	NB 1502+35.17(AH)		1649+71.37
③	SB 1336+77.99		1502+40.24(BK)
	SB 1502+35.17(AH)		1649+71.37

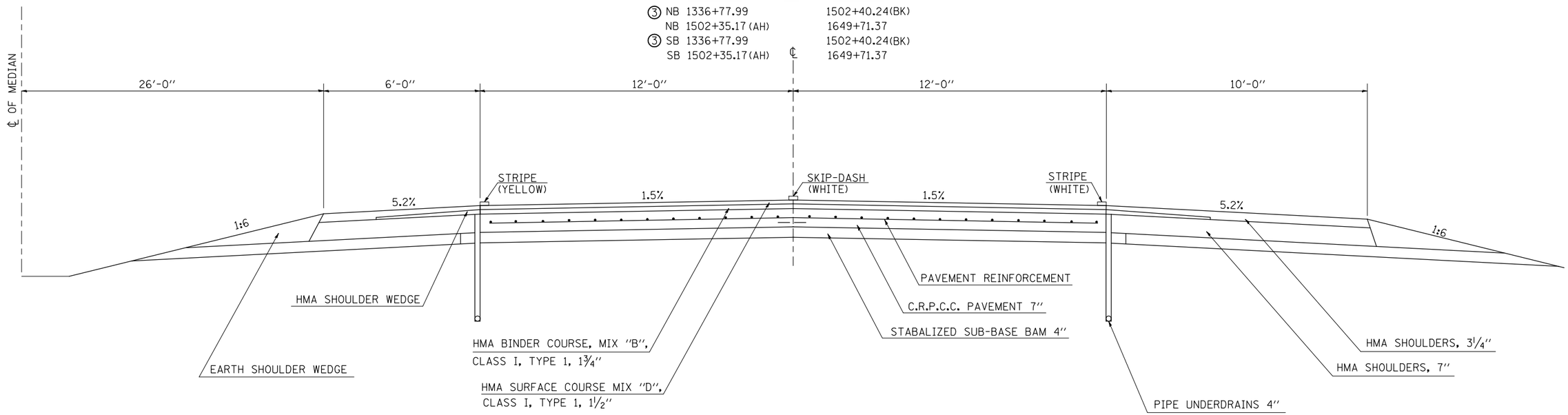

⑥ EXISTING TYPICAL CROSS SECTION

RAMPS AT US 136

STATION	TO	STATION
RAMP CA 61+90.94		63+25.00 (BK)
RAMP CA 0+00.00 (AH)		9+64.03
RAMP DB 182+00.00		183+24.92 (BK)
RAMP DB 0+00.00 (AH)		7+38.28
RAMP DA 98+95.57		109+60.88
RAMP AC 127+67.50		126+62.40 (BK)
RAMP AC 6+62.40 (AH)		2+14.56

BRIDGE OMISSION
NB STA. 1+14.02 TO STA. 3+13.94 (SN 010-0012)
SB STA. 0+95.53 TO STA. 2+92.45 (SN 010-0013)

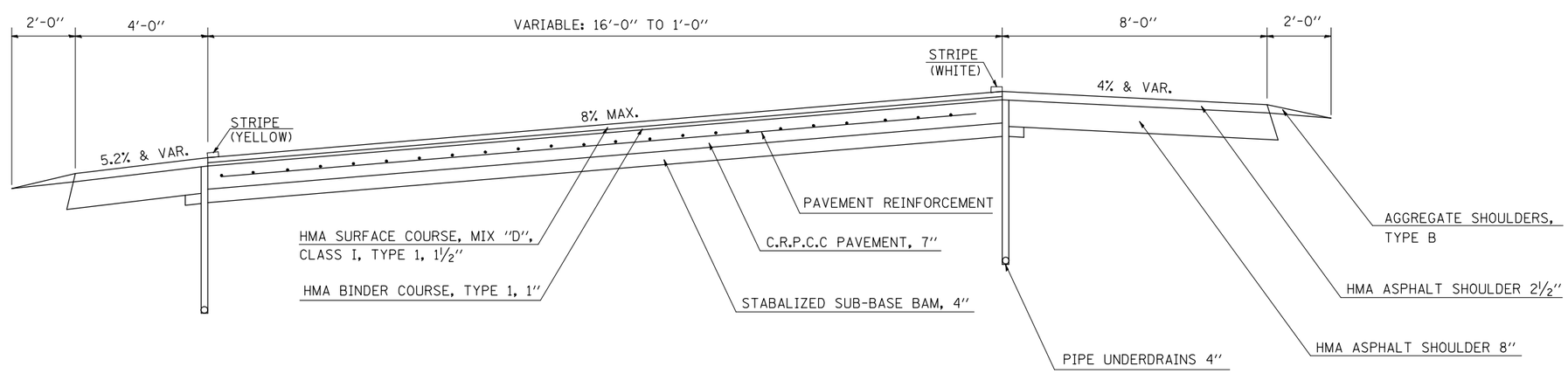

FILE NAME = c:\pw_work\pwidot\bowerml\d0110023\70766-sht-typical.dgn	USER NAME = bowerml	DESIGNED - MLB	REVISED -
		DRAWN - MLB	REVISED -
	PLOT SCALE = 40.0000 ' / IN.	CHECKED - MLB	REVISED -
	PLOT DATE = 12/2/2009	DATE - 01/21/09	REVISED -

STATE OF ILLINOIS
DEPARTMENT OF TRANSPORTATION

EXISTING TYPICAL CROSS SECTIONS

SCALE: N/A | SHEET NO. OF SHEETS | STA. TO STA.

F.A.I. RTE.	SECTION	COUNTY	TOTAL SHEETS	SHEET NO.
57	10-37RS-2&(10,27-38)RS-1	CHAMPAIGN	41	9
		CONTRACT NO. 70766		
		ILLINOIS FED. AID PROJECT		

① PROPOSED TYPICAL CROSS SECTION

INTERSTATE 57

STATION	TO	STATION
② NB 1272+95.98		1274+42.94
NB 1276+42.86		1296+95.45 ③
SB 1270+24.74		1274+49.09
SB 1276+49.01		1277+55.76 ②
② SB 1289+18.11		1296+95.45 ③

BRIDGE OMISSION
NB STA. 1274+42.94 TO 1276+42.86 (S.N. 010-0013)
SB STA. 1274+49.09 TO 1276+49.01 (S.N. 010-0012)

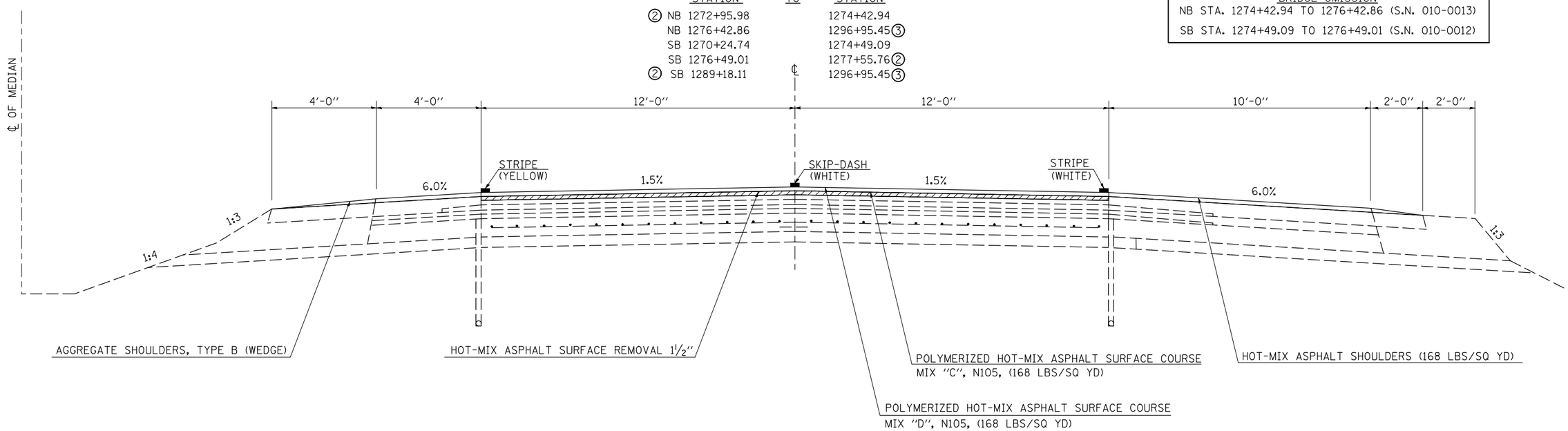

② PROPOSED TYPICAL CROSS SECTION

INTERSTATE 57

STATION	TO	STATION
NB 1270+24.74		1272+95.98 ①
③ NB 1306+28.42		1308+15.60 ④
④ NB 1320+16.32		1321+36.77 ③
① SB 1277+55.76		1289+18.11 ①
③ SB 1310+21.22		1311+29.34 ④
④ SB 1323+29.41		1325+17.36 ③

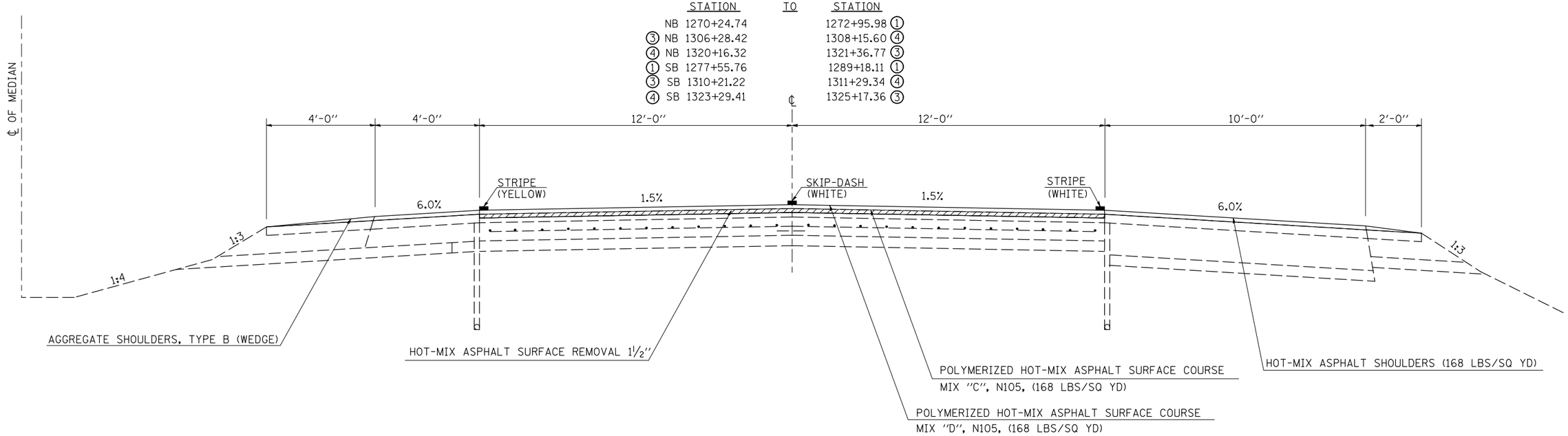

FILE NAME = c:\pw_work\pwidot\bowerml\d0110023\70766-sht-typical.dgn	USER NAME = bowerml	DESIGNED - MLB	REVISED -
		DRAWN - MLB	REVISED -
	PLOT SCALE = 40.0000 ' / IN.	CHECKED - MLB	REVISED -
	PLOT DATE = 12/2/2009	DATE - 01/21/09	REVISED -

STATE OF ILLINOIS
DEPARTMENT OF TRANSPORTATION

PROPOSED TYPICAL CROSS SECTIONS

SCALE: N/A | SHEET NO. OF SHEETS | STA. TO STA.

F.A.I. RTE.	SECTION	COUNTY	TOTAL SHEETS	SHEET NO.
57	10-37RS-2&(10,27-38)RS-1	CHAMPAIGN	41	10
		CONTRACT NO. 70766		
	ILLINOIS FED. AID PROJECT			

③ PROPOSED TYPICAL CROSS SECTION

INTERSTATE 57

STATION	TO	STATION
① NB 1296+95.45		1306+28.42 ②
④ NB 1314+67.36		1315+08.34
NB 1316+65.58		1317+07.36 ④
② NB 1321+36.77		1336+77.99 ⑤
① SB 1296+95.45		1310+21.22 ②
④ SB 1314+43.67		1314+85.15
SB 1316+32.26		1316+78.31 ④
② SB 1325+17.36		1336+77.99 ⑤

BRIDGE OMISSION
NB STA. 1315+08.34 TO 1316+65.58 (S.N. 010-0191)
SB STA. 1314+85.15 TO 1316+37.26 (S.N. 010-0192)

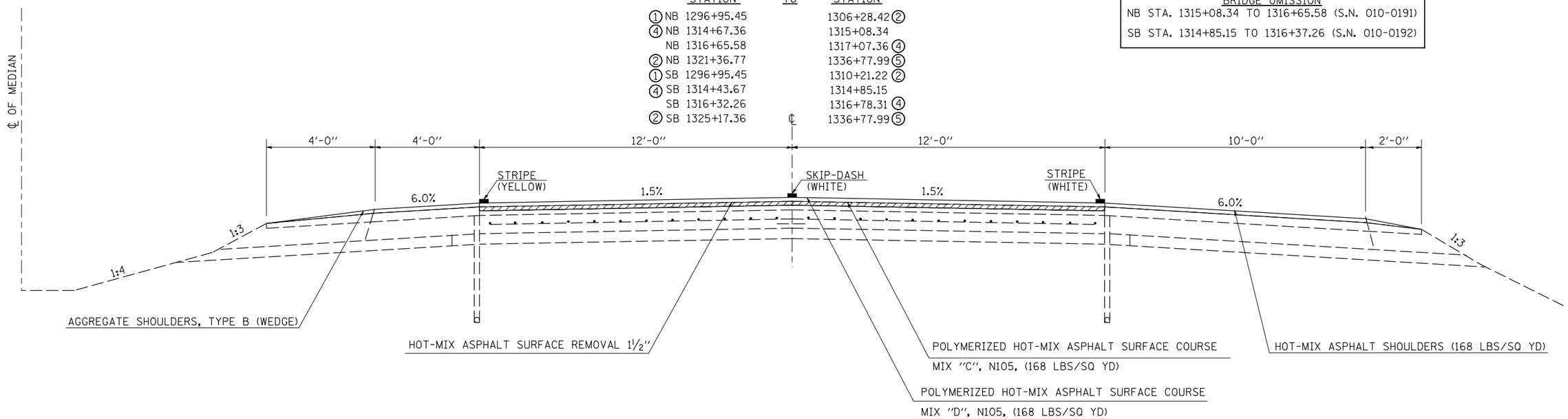

④ PROPOSED TYPICAL CROSS SECTION

INTERSTATE 57

STATION	TO	STATION
② NB 1308+15.60		1314+67.36 ③
③ NB 1317+07.36		1320+16.32 ②
② SB 1311+29.34		1314+43.67 ③
③ SB 1316+78.31		1323+29.41 ②

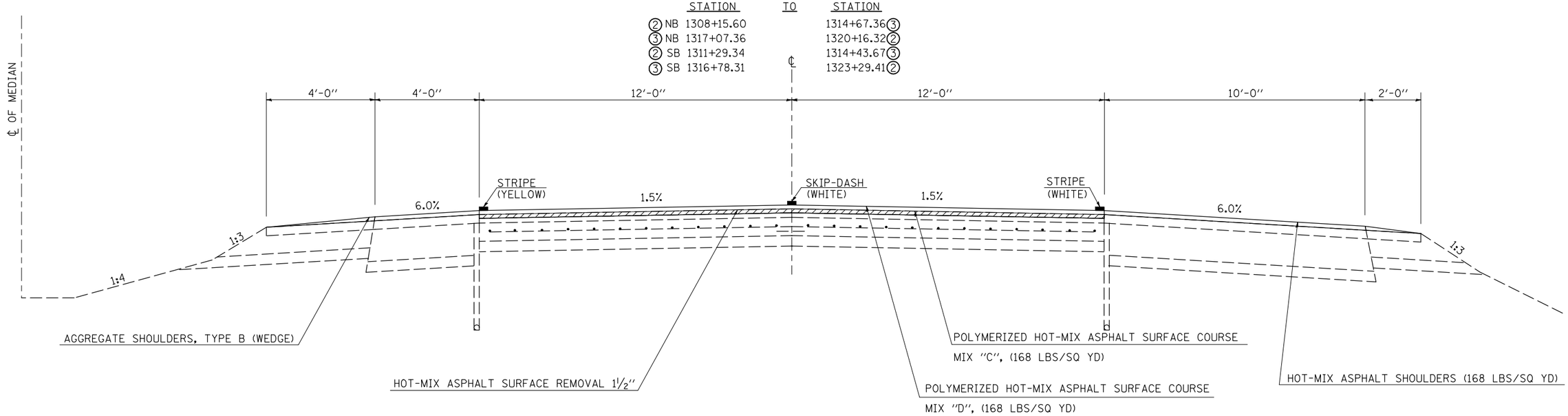

FILE NAME = c:\pw_work\pwidot\bowerml\d0110023\70766-sht-typical.dgn	USER NAME = bowerml	DESIGNED - MLB	REVISED -
		DRAWN - MLB	REVISED -
	PLOT SCALE = 40.0000 ' / IN.	CHECKED - MLB	REVISED -
	PLOT DATE = 12/2/2009	DATE - 01/21/09	REVISED -

STATE OF ILLINOIS
DEPARTMENT OF TRANSPORTATION

PROPOSED TYPICAL CROSS SECTIONS

SCALE: N/A | SHEET NO. OF SHEETS | STA. TO STA.

F.A.I. RTE.	SECTION	COUNTY	TOTAL SHEETS	SHEET NO.
57	10-37RS-2&(10,27-38)RS-1	CHAMPAIGN	41	11

CONTRACT NO. 70766

ILLINOIS FED. AID PROJECT

⑤ PROPOSED TYPICAL CROSS SECTION

INTERSTATE 57

	STATION	TO	STATION
③ NB	1336+77.99		1502+40.24(BK)
NB	1502+35.17(AH)		1649+71.37
③ SB	1336+77.99		1502+40.24(BK)
SB	1502+35.17(AH)		1649+71.37

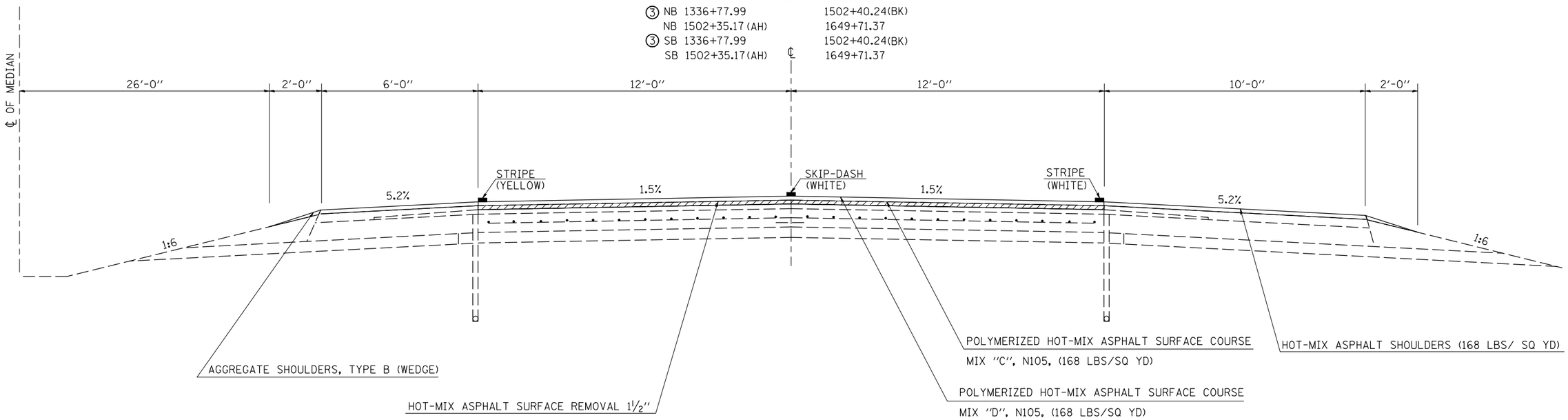

⑥ PROPOSED TYPICAL CROSS SECTION

RAMPS AT US 136

	STATION	TO	STATION
RAMP CA	61+90.94		63+25.00 (BK)
RAMP CA	0+00.00 (AH)		9+64.03
RAMP DB	182+00.00		183+24.92 (BK)
RAMP DB	0+00.00 (AH)		7+38.28
RAMP DA	98+95.57		109+60.88
RAMP AC	127+67.50		126+62.40 (BK)
RAMP AC	6+62.40 (AH)		2+14.56

BRIDGE OMISSION
NB STA. 1+14.02 TO STA. 3+13.94 (SN 010-0012)
SB STA. 0+95.53 TO STA. 2+92.45 (SN 010-0013)

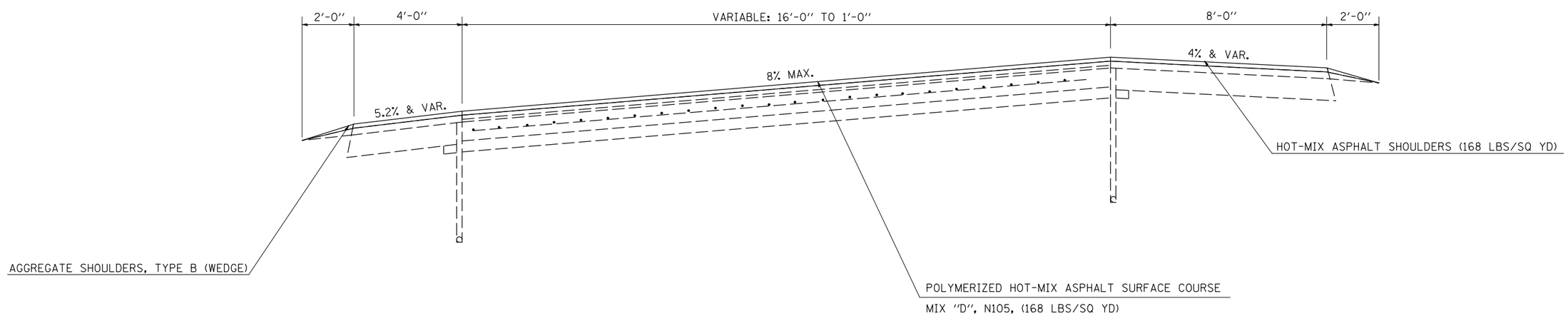

FILE NAME = c:\pw_work\pwidot\bowerml\d0110023\70766-sht-typical.dgn	USER NAME = bowerml	DESIGNED - MLB	REVISED -	STATE OF ILLINOIS DEPARTMENT OF TRANSPORTATION	PROPOSED TYPICAL CROSS SECTIONS	F.A.I. RTE.	SECTION	COUNTY	TOTAL SHEETS	SHEET NO.
		DRAWN - MLB	REVISED -			57	10-37RS-2&(10,27-38)RS-1	CHAMPAIGN	41	12
	PLOT SCALE = 40.0000 ' / IN.	CHECKED - MLB	REVISED -					CONTRACT NO. 70766		
	PLOT DATE = 12/2/2009	DATE - 01/21/09	REVISED -		SCALE: N/A SHEET NO. OF SHEETS STA. TO STA.		ILLINOIS FED. AID PROJECT			

40600982 HOT-MIX ASPHALT SURFACE REMOVAL - BUTT JOINT

		STATION	TO	STATION	LENGTH (FT)	WIDTH (FT)	SQ YD
I-57 MAINLINE							
NB	RT	1270+24.74	RT	1270+77.24	52.5	10.0	58.3
NB	LT	1270+24.74	LT	1270+77.24	52.5	4.0	23.3
SB	RT	1270+24.74	RT	1270+77.24	52.5	4.0	23.3
NB	LT	1273+97.94	LT	1274+42.94	45.0	4.0	20.0
SB	RT	1274+04.09	RT	1274+49.09	45.0	4.0	20.0
NB	LT	1276+42.86	LT	1276+87.86	45.0	4.0	20.0
SB	RT	1276+49.01	RT	1276+94.01	45.0	4.0	20.0
NB	RT	1314+63.34	RT	1315+08.34	45.0	10.0	50.0
NB	LT	1314+63.34	LT	1315+08.34	45.0	4.0	20.0
SB	RT	1314+40.15	RT	1314+85.15	45.0	4.0	20.0
SB	LT	1314+40.15	LT	1314+85.15	45.0	10.0	50.0
NB	RT	1316+65.58	RT	1317+10.58	45.0	10.0	50.0
NB	LT	1316+65.58	LT	1317+10.58	45.0	4.0	20.0
SB	RT	1316+37.26	RT	1316+82.26	45.0	4.0	20.0
SB	LT	1316+37.26	LT	1316+82.26	45.0	10.0	50.0
NB	RT	1587+00.25	RT	1587+45.25	45.0	10.0	50.0
NB	LT	1587+00.25	LT	1587+45.25	45.0	4.0	20.0
SB	RT	1587+64.75	LT	1588+09.75	45.0	4.0	20.0
SB	LT	1587+64.75	RT	1588+09.75	45.0	10.0	50.0
NB	RT	1649+18.87	RT	1649+71.37	52.5	10.0	58.3
NB	LT	1649+18.87	LT	1649+71.37	52.5	4.0	23.3
SB	RT	1649+18.87	RT	1649+71.37	52.5	4.0	23.3
SB	LT	1649+18.87	LT	1649+71.37	52.5	10.0	58.3
						SUB-TOTAL =	768.3
US 136 INTERCHANGE RAMPS							
RAMP CA		61+90.40		62+58.44	67.5	16.0	120.0
RAMP DB		181+32.50		182+00.00	67.5	16.0	120.0
RAMP AC		127+00.00		127+67.50	67.5	16.0	120.0
RAMP DA		98+92.57		98+25.07	67.5	16.0	120.0
RAMP CA	RT	61+90.94	RT	62+58.44	67.5	8.0	60.0
RAMP CA	RT	0+47.53	RT	0+92.53	45.0	8.0	40.0
RAMP DB	LT	6+85.78	LT	7+38.28	52.5	8	46.7
RAMP DB	RT	181+32.50	RT	182+00.00	67.5	4.0	30.0
RAMP DB	LT	181+32.50	LT	182+00.00	67.5	8.0	60.0
RAMP DB	LT	3+13.94	LT	3+58.94	45.0	8.0	40.0
RAMP CA	RT	2+92.45	RT	3+37.45	45.0	8.0	40.0
RAMP DB	LT	0+69.02	LT	1+14.02	45.0	8.0	40.0
RAMP DA	RT	98+92.57	RT	99+60.07	67.5	8.0	60.0
RAMP AC	RT	126+32.50	RT	127+00.00	67.5	4.0	30.0
RAMP AC	LT	126+32.50	LT	127+00.00	67.5	8.0	60.0
						SUB-TOTAL =	986.7
						TOTAL =	1755.0

40600990 TEMPORARY RAMP

		STATION	TO	STATION	LENGTH (FT)	WIDTH (FT)	SQ YD
I- 57 SHOULDER							
NB	RT	1270+24.74	RT	1270+69.74	45.0	10.0	50.0
NB	LT	1270+24.74	LT	1270+69.74	45.0	4.0	20.0
SB	RT	1270+24.74	RT	1270+69.74	45.0	4.0	20.0
SB	LT	1270+24.74	LT	1270+69.74	45.0	10.0	50.0
NB	LT	1273+97.94	LT	1274+42.94	45.0	4.0	20.0
SB	RT	1274+04.09	RT	1274+49.09	45.0	4.0	20.0
NB	LT	1276+42.86	LT	1276+87.86	45.0	4.0	20.0
SB	RT	1276+49.01	RT	1276+94.01	45.0	4.0	20.0
NB	RT	1314+63.34	RT	1315+08.34	45.0	10.0	50.0
NB	LT	1314+63.34	LT	1315+08.34	45.0	4.0	20.0
SB	RT	1314+40.15	RT	1314+85.15	45.0	4.0	20.0
SB	LT	1314+40.15	LT	1314+85.15	45.0	10.0	50.0
NB	RT	1316+65.58	RT	1317+10.58	45.0	10.0	50.0
NB	LT	1316+65.58	LT	1317+10.58	45.0	4.0	20.0
SB	RT	1316+37.26	RT	1316+82.26	45.0	4.0	20.0
SB	LT	1316+37.26	LT	1316+82.26	45.0	10.0	50.0
NB	RT	1587+00.25	RT	1587+45.25	45.0	10.0	50.0
NB	LT	1587+00.25	LT	1587+45.25	45.0	4.0	20.0
SB	RT	1587+64.75	LT	1588+09.75	45.0	4.0	20.0
SB	LT	1587+64.75	RT	1588+09.75	45.0	10.0	50.0
NB	RT	1649+26.37	RT	1649+71.37	45.0	10.0	50.0
NB	LT	1649+26.37	LT	1649+71.37	45.0	4.0	20.0
SB	RT	1649+26.37	RT	1649+71.37	45.0	4.0	20.0
SB	LT	1649+26.37	LT	1649+71.37	45.0	10.0	50.0
						SUB-TOTAL =	780.0
I-57 MAINLINE							
NB		1270+24.74		1270+69.74	45.0	24.0	120.0
SB		1270+24.74		1270+69.74	45.0	24.0	120.0
NB		1273+97.94		1274+42.94	45.0	24.0	120.0
SB		1274+04.09		1274+49.09	45.0	24.0	120.0
NB		1276+42.86		1276+87.86	45.0	24.0	120.0
SB		1276+49.01		1276+94.01	45.0	24.0	120.0
NB		1314+63.34		1315+08.34	45.0	24.0	120.0
SB		1314+40.15		1314+85.15	45.0	24.0	120.0
NB		1316+65.58		1317+10.58	45.0	24.0	120.0
SB		1316+37.26		1316+82.26	45.0	24.0	120.0
NB		1587+00.25		1587+45.25	45.0	24.0	120.0
SB		1587+64.75		1588+09.75	45.0	24.0	120.0
NB		1649+18.87		1649+63.87	45.0	24.0	120.0
SB		1649+18.87		1649+63.87	45.0	24.0	120.0
						SUB-TOTAL =	1680.0
US 136 INTERCHANGE							
RAMP SHOULDER							
RAMP CA	RT	61+90.94	RT	62+35.94	45.0	8.0	40.0
RAMP DB	RT	181+77.50	RT	182+00.00	22.5	4.0	10.0
RAMP DB	LT	181+77.50	LT	182+00.00	22.5	8.0	20.0
RAMP DA	RT	98+92.57	RT	99+37.57	45.0	8.0	40.0
RAMP AC	RT	126+32.50	RT	126+77.50	45.0	4.0	20.0
RAMP AC	LT	126+32.50	LT	126+77.50	45.0	8.0	40.0
						SUB-TOTAL =	170.0
RAMP MAINLINE							
RAMP CA		61+90.94		62+35.94	45.0	16.0	80.0
RAMP CA		0+47.53		0+92.53	45.0	16.0	80.0
RAMP DB		3+13.94		3+58.94	45.0	16.0	80.0
RAMP DB		6+93.28		7+38.28	45.0	17.0	85.0
RAMP CA		2+92.45		3+37.45	45.0	16.0	80.0
RAMP DB		0+69.02		1+14.02	45.0	16.0	80.0
RAMP DA		98+92.57		99+37.57	45.0	16.0	80.0
RAMP AC		126+32.50		126+77.50	45.0	16.0	80.0
						SUB-TOTAL =	645.0
						TOTAL =	3275.0
						USE =	3275.0

44000155 HMA SURFACE REMOVAL 1 1/2"

I-57 MAINLINE

		STATION	TO		STATION	LENGTH (FOOT)	WIDTH (FOOT)	AREA (SQ YD)
I-57 MAINLINE								
NB		1270+24.74		NB	1274+42.94	418.2	24	1115.2
SB		1270+24.74		SB	1274+49.09	424.4	24	1131.6
NB		1276+42.86		NB	1315+08.34	3865.5	24	10307.9
SB		1276+49.01		SB	1314+85.15	3836.1	24	10229.7
NB		1316+65.58		NB	1346+18.03	2952.5	24	7873.2
SB		1316+37.26		SB	1345+92.31	2955.0	24	7880.1
NB		1348+18.03		NB	1408+60.50	6042.5	24	16113.3
SB		1347+92.31		SB	1408+34.78	6042.5	24	16113.3
NB		1410+60.50		NB	1471+40.13	6079.6	24	16212.3
SB		1410+34.78		SB	1471+14.41	6079.6	24	16212.3
NB		1473+40.13		NB	1502+40.24	2900.1	24	7733.6
NB		1502+35.17		NB	1532+05.54	2970.4	25	8251.0
SB		1473+14.41		SB	1502+40.24	2925.8	26	8452.4
SB		1502+35.17		SB	1532+05.54	2970.4	27	8911.1
NB		1534+05.54		NB	1587+45.25	5339.7	24	14239.2
SB		1534+05.54		SB	1587+45.25	5339.7	24	14239.2
NB		1587+64.75		NB	1589+75.06	210.3	24	560.8
SB		1587+64.75		SB	1589+49.34	210.3	24	560.8
NB		1591+75.06		NB	1649+71.37	5796.3	24	15456.8
SB		1591+49.34		SB	1649+71.37	5822.0	24	15525.4
I-57 SHOULDERS			(SEE SHEET 26 FOR SHOULDERS UNDER STRUCTURES)					
NB	RT	1345+18.03		NB	RT 1349+18.03	400.0	10	444.4
NB	LT	1345+18.03		NB	LT 1349+18.03	400.0	4	177.8
SB	RT	1344+92.31		SB	RT 1348+92.31	400.0	4	177.8
SB	LT	1344+92.31		SB	LT 1348+92.31	400.0	10	444.4
NB	RT	1407+60.50		NB	RT 1411+60.50	400.0	10	444.4
NB	LT	1407+60.50		NB	LT 1411+60.50	400.0	4	177.8
SB	RT	1407+34.78		SB	RT 1411+34.78	400.0	4	177.8
SB	LT	1407+34.78		SB	LT 1411+34.78	400.0	10	444.4
NB	RT	1470+40.13		NB	RT 1474+40.13	400.0	10	444.4
NB	LT	1470+40.13		NB	LT 1474+40.13	400.0	4	177.8
SB	RT	1470+14.41		SB	RT 1474+14.41	400.0	4	177.8
SB	LT	1470+14.41		SB	LT 1474+14.41	400.0	10	444.4
NB	RT	1531+05.54		NB	RT 1535+05.54	400.0	10	444.4
NB	LT	1531+05.54		NB	LT 1535+05.54	400.0	4	177.8
SB	RT	1531+05.54		SB	RT 1535+05.54	400.0	4	177.8
SB	LT	1531+05.54		SB	LT 1535+05.54	400.0	10	444.4
NB	RT	1588+75.06		NB	RT 1592+75.06	400.0	10	444.4
NB	LT	1588+75.06		NB	LT 1592+75.06	400.0	4	177.8
SB	RT	1588+49.34		SB	RT 1592+49.34	400.0	4	177.8
SB	LT	1588+49.34		SB	LT 1592+49.34	400.0	10	444.4
						TOTAL =		203341.7
						USE=		203342.0

44000159 HMA SURFACE REMOVAL, 2 1/2"

(SEE SHEET 23 FOR DETAILS)

I-57 MAINLINE

	STATION	TO		STATION	LENGTH (FOOT)	WIDTH (FOOT)	AREA (SQ YD)
NB	1408+60.50		NB	1410+60.50	200.0	24	533.3
SB	1471+14.41		SB	1473+14.41	200.0	24	533.3
						TOTAL =	1066.7
						USE =	1067.0

44000162 HMA SURFACE REMOVAL, 3 1/4"

(SEE SHEET 23 FOR DETAILS)

I-57 MAINLINE

	STATION	TO		STATION	LENGTH (FOOT)	WIDTH (FOOT)	AREA (SQ YD)
NB	1346+18.03		NB	1348+18.03	200.0	24	533.3
SB	1345+92.31		SB	1347+92.31	200.0	24	533.3
NB	1408+34.78		NB	1410+34.78	200.0	24	533.3
SB	1471+40.13		SB	1473+40.13	200.0	24	533.3
NB	1532+05.54		NB	1534+05.54	200.0	24	533.3
SB	1532+05.54		SB	1534+05.54	200.0	24	533.3
NB	1589+75.06		NB	1591+75.06	200.0	24	533.3
SB	1589+49.34		SB	1591+49.34	200.0	24	533.3
						TOTAL =	4266.7
						USE =	4267.0

48101200 AGGREGATE SHOULDERS TYPE B

		STATION	TO		STATION	LENGTH (FOOT	WIDTH (FOOT)	AREA (SQ YD)	SHOULDER THICKNESS (INCHES)	48101200 AGG SHLD (TON)
I-57 MAINLINE										
NB	RT	1270+24.74	NB	RT	1272+16.35	191.6	2	42.6	1.25	2.7
NB	LT	1270+24.74	NB	LT	1274+42.94	418.2	4	185.9	1.25	11.9
SB	RT	1270+24.74	SB	RT	1274+49.09	424.3	4	188.6	1.25	12.1
NB	RT	1276+42.86	NB	RT	1283+99.55	756.7	2	168.2	1.25	10.8
NB	LT	1276+42.86	NB	LT	1315+08.34	3865.5	4	1718.0	1.25	110.4
SB	LT	1278+87.95	SB	LT	1289+28.16	1040.2	2	231.2	1.25	14.8
SB	LT	1276+49.01	SB	LT	1314+85.15	3836.1	2	852.5	1.25	54.8
NB	RT	1294+67.86	NB	RT	1315+08.34	2040.5	2	453.4	1.25	29.1
SB	RT	1292+75.99	SB	RT	1314+85.15	2209.2	4	981.8	1.25	63.1
NB	RT	1316+65.58	NB	RT	1502+40.24	18574.7	2	4127.7	1.25	265.1
NB	RT	1502+35.17	NB	RT	1649+71.37	14736.2	2	3274.7	1.25	210.4
NB	LT	1316+65.58	NB	LT	1502+40.24	18574.7	4	8255.4	1.25	530.3
NB	LT	1502+35.17	NB	LT	1649+71.37	14736.2	5	8186.8	1.25	525.9
SB	RT	1316+37.26	SB	RT	1502+40.24	18603.0	4	8268.0	1.25	531.1
SB	RT	1502+35.17	SB	RT	1649+71.37	14736.2	4	6549.4	1.25	420.7
SB	LT	1316+37.26	SB	LT	1502+40.24	18603.0	2	4134.0	1.25	265.6
SB	LT	1502+35.17	SB	LT	1649+71.37	14736.2	3	4912.1	1.25	315.5
				MED	1395+81.00	152.0	2	33.8	1.25	2.2
							SUB-TOTAL =	52564.0		3376.5
US 136 INTERCHANGE RAMPS										
RAMP CA NB	RT	61+90.94		RT	62+58.44	67.50	8	60.0	1.25	3.9
RAMP CA NB	RT	0+47.53		RT	0+92.53	45.00	8	40.0	1.25	2.6
RAMP DB SB	LT	3+13.94		LT	7+38.28	424.34	8	377.2	1.25	24.2
RAMP DB SB	LT	182+00.00		LT	183+24.92	124.92	8	111.0	1.25	7.1
RAMP DB SB	LT	0+00.00		LT	1+14.02	114.02	8	101.4	1.25	6.5
RAMP DA NB	RT	98+92.57		RT	109+60.88	1068.31	8	949.6	1.25	61.0
RAMP AC SB	LT	126+62.40		LT	127+67.50	105.10	8	93.4	1.25	6.0
RAMP AC SB	LT	2+14.56		LT	6+62.40	447.84	8	398.1	1.25	25.6
RAMP AC SB	RT	126+62.40		RT	127+67.50	105.10	4	46.7	1.25	3.0
RAMP AC SB	RT	5+62.40		RT	6+62.40	100.00	4	44.4	1.25	2.9
							SUB-TOTAL =	2221.8		142.7
									TOTAL =	3519.2
									USE =	3519.0

HOT-MIX ASPHALT CALCULATIONS

		STATION	TO		STATION	LENGTH (FOOT)	WIDTH (FOOT)	AREA (SQ YD)	HMA SC MIX "C" THICKNESS (INCHES)	HMA SC MIX "D" THICKNESS (INCHES)	40603525 P HMA SC MIX "C" N105 (TONS)	40603550 P HMA SC MIX "D" N105 (TONS)	40600100 BIT MATLS PRIME COAT (GAL)	40600300 AGG PRIME COAT (TONS)	X0322729 MATERIAL TRANSFER DEVICE (TON)
		I-57 MAINLINE													
	NB	1270+24.74		NB	1274+42.94	418.2	24	1115.2	1.5	1.5	93.7	93.7	111.5	2.2	187.4
	SB	1270+24.74		SB	1274+49.09	424.3	24	1131.6	1.5	1.5	95.1	95.1	113.2	2.3	190.1
	NB	1276+42.86		NB	1314+63.34	3820.5	24	10187.9	1.5	1.5	855.8	855.8	1018.8	20.4	1711.6
	SB	1276+49.01		SB	1314+85.15	3836.1	24	10229.7	1.5	1.5	859.3	859.3	1023.0	20.5	1718.6
	NB	1316+65.58		NB	1346+18.03	2952.5	24	7873.2	1.5	1.5	661.3	661.3	787.3	15.7	1322.7
	SB	1316+37.26		SB	1345+92.31	2955.0	24	7880.1	1.5	1.5	661.9	661.9	788.0	15.8	1323.9
S.N. 010-0163	NB	1346+18.03		NB	1348+18.03	200.0	24	533.3	1.75	1.5	52.3	44.8	53.3	1.1	97.1
S.N. 010-0163	SB	1345+92.31		SB	1347+92.31	200.0	24	533.3	1.75	1.5	52.3	44.8	53.3	1.1	97.1
	NB	1348+18.03		NB	1408+60.50	6042.5	24	16113.3	1.5	1.5	1353.5	1353.5	1611.3	32.2	2707.0
	SB	1347+92.31		SB	1408+34.78	6042.5	24	16113.3	1.5	1.5	1353.5	1353.5	1611.3	32.2	2707.0
S.N. 010-0162	NB	1408+60.50		NB	1410+60.50	200.0	24	533.3	1.0	1.5	29.9	44.8	53.3	1.1	74.7
S.N. 010-0162	SB	1408+34.78		SB	1410+34.78	200.0	24	533.3	1.75	1.5	52.3	44.8	53.3	1.1	97.1
	NB	1410+60.50		NB	1471+40.13	6079.6	24	16212.3	1.5	1.5	1361.8	1361.8	1621.2	32.4	2723.7
	SB	1410+34.78		SB	1471+14.41	6079.6	24	16212.3	1.5	1.5	1361.8	1361.8	1621.2	32.4	2723.7
S.N. 010-0161	NB	1471+40.13		NB	1473+40.13	200.0	24	533.3	1.75	1.5	52.3	44.8	53.3	1.1	97.1
S.N. 010-0161	SB	1471+14.41		SB	1473+14.41	200.0	24	533.3	1.0	1.5	29.9	44.8	53.3	1.1	74.7
	NB	1473+40.13		NB	1502+40.24	2900.1	24	7733.6	1.5	1.5	649.6	649.6	773.4	15.5	1299.2
	NB	1502+35.17		NB	1532+05.54	2970.4	24	7921.0	1.5	1.5	665.4	665.4	792.1	15.8	1330.7
	SB	1473+14.41		SB	1502+40.24	2925.8	24	7802.2	1.5	1.5	655.4	655.4	780.2	15.6	1310.8
	SB	1502+35.17		SB	1532+05.54	2970.4	24	7921.0	1.5	1.5	665.4	665.4	792.1	15.8	1330.7
S.N. 010-0189	NB	1532+05.54		NB	1534+05.54	200.0	24	533.3	1.75	1.5	52.3	44.8	53.3	1.1	97.1
S.N. 010-0189	SB	1532+05.54		SB	1534+05.54	200.0	24	533.3	1.75	1.5	52.3	44.8	53.3	1.1	97.1
	NB	1534+05.54		NB	1587+45.25	5339.7	24	14239.2	1.5	1.5	1196.1	1196.1	1423.9	28.5	2392.2
	SB	1534+05.54		SB	1587+45.25	5339.7	24	14239.2	1.5	1.5	1196.1	1196.1	1423.9	28.5	2392.2
	NB	1587+64.75		NB	1589+75.06	210.3	24	560.8	1.5	1.5	47.1	47.1	56.1	1.1	94.2
	SB	1587+64.75		SB	1589+49.34	210.3	24	560.8	1.5	1.5	47.1	47.1	56.1	1.1	94.2
S.N. 010-0082	NB	1589+75.06		NB	1591+75.06	200.0	24	533.3	1.75	1.5	52.3	44.8	53.3	1.1	97.1
S.N. 010-0082	SB	1589+49.34		SB	1591+49.34	200.0	24	533.3	1.75	1.5	52.3	44.8	53.3	1.1	97.1
	NB	1591+75.06		NB	1649+71.37	5796.3	24	15456.8	1.5	1.5	1298.4	1298.4	1545.7	30.9	2596.7
	SB	1591+49.34		SB	1649+71.37	5822.0	24	15525.4	1.5	1.5	1304.1	1304.1	1552.5	31.1	2608.3
							SUB-TOTAL =	200362.5			16860.3	16830.4	20036.2	400.7	33690.8
		US 136 INTERCHANGE RAMPS													
RAMP CA	NB	61+90.40		NB	63+25.00	134.60	16	239.3	0.0	1.5	0.0	20.1	12.0	0.24	20.1
RAMP CA	NB	0+00.00		NB	0+92.53	92.53	16	164.5	0.0	1.5	0.0	13.8	8.2	0.16	13.8
RAMP CA	NB	2+92.45		NB	9+64.03	671.58	VAR	635.0	0.0	1.5	0.0	53.3	31.8	0.64	53.3
RAMP DB	SB	3+13.94		SB	7+38.28	424.34	VAR.	613.0	0.0	1.5	0.0	51.5	30.7	0.61	51.5
RAMP DB	SB	0+00.00		SB	1+14.02	114.02	16	202.7	0.0	1.5	0.0	17.0	10.1	0.20	17.0
RAMP DB	SB	181+32.50		SB	183+24.92	192.42	16	342.1	0.0	1.5	0.0	28.7	17.1	0.34	28.7
RAMP DA	NB	98+92.57		NB	109+60.88	1068.31	VAR.	1009.0	0.0	1.5	0.0	84.8	50.5	1.01	84.8
RAMP AC	SB	126+62.40		SB	127+67.50	105.10	16	186.8	0.0	1.5	0.0	15.7	9.3	0.19	15.7
RAMP AC	SB	2+14.56		SB	6+62.40	447.84	VAR.	423.0	0.0	1.5	0.0	35.5	21.2	0.42	35.5
							SUB-TOTAL =	3815.4			0.0	320.5	190.8	3.8	320.5
								TOTAL =			16860.3	17150.9	20227.0	404.5	34011.3
								USE =			16860.0	17151.0	20227.0	405.0	34011.0

48203100 HOT MIX ASPHALT SHOULDERS

	STATION	TO	STATION		LENGTH (FOOT	WIDTH (FOOT)	AREA (SQ YD)	SHOULDER THICKNESS (INCHES)	48203100 HMA SHLD (TON)	40600100 BIT MATLS PR CT (GAL)	40600300 AGG PR CT (TONS)
I-57 MAINLINE											
NB RT	1270+24.74	NB RT	1272+16.35		191.6	10	212.9	1.5	17.9	21.3	0.4
NB RT	1272+16.35	NB RT	1273+55.46	GORE	139.1	VAR.	147.0	1.5	12.3	14.7	0.3
NB LT	1270+24.74	NB LT	1274+42.94		418.2	4	185.9	1.5	15.6	18.6	0.4
SB RT	1270+24.74	SB RT	1274+49.09		424.3	4	188.6	1.5	15.8	18.9	0.4
NB RT	1276+42.86	NB RT	1283+99.55		756.7	10	840.8	1.5	70.6	84.1	1.7
NB RT	1283+99.55	NB RT	1287+64.71	GORE	365.2	VAR.	386.0	1.5	32.4	38.6	0.8
NB LT	1276+42.86	NB LT	1315+08.34		3865.5	4	1718.0	1.5	144.3	171.8	3.4
SB LT	1277+27.97	SB LT	1278+87.95	GORE	160.0	VAR.	436.0	1.5	36.6	43.6	0.9
SB LT	1278+87.95	SB LT	1289+28.16		1040.2	10	1155.8	1.5	97.1	115.6	2.3
NB RT	1283+99.55	NB RT	1287+68.19	GORE	368.6	VAR.	737.2	1.5	61.9	73.7	1.5
SB LT	1289+28.16	SB LT	1290+87.02	GORE	158.9	VAR.	168.0	1.5	14.1	16.8	0.3
SB LT	1276+49.01	SB LT	1314+85.15		3836.1	10	4262.4	1.5	358.0	426.2	8.5
NB RT	1294+67.86	NB RT	1315+08.34		2040.5	10	2267.2	1.5	190.4	226.7	4.5
SB RT	1292+75.99	SB RT	1314+85.15		2209.2	4	981.8	1.5	82.5	98.2	2.0
NB RT	1316+65.58	NB RT	1502+40.24		18574.7	10	20638.5	1.5	1733.6	2063.9	41.3
NB RT	1502+35.17	NB RT	1587+45.25		8510.1	10	9455.6	1.5	794.3	945.6	18.9
NB RT	1587+64.75	NB RT	1649+71.37		6206.6	10	6896.2	1.5	579.3	689.6	13.8
NB LT	1316+65.58	NB LT	1502+40.24		18574.7	4	8255.4	1.5	693.5	825.5	16.5
NB LT	1502+35.17	NB LT	1587+45.25		8510.1	4	3782.3	1.5	317.7	378.2	7.6
NB LT	1587+64.75	NB LT	1649+71.37		6206.6	4	2758.5	1.5	231.7	275.8	5.5
SB RT	1316+37.26	SB RT	1502+40.24		18603.0	4	8268.0	1.5	694.5	826.8	16.5
SB RT	1502+35.17	SB RT	1587+45.25		8510.1	4	3782.3	1.5	317.7	378.2	7.6
SB RT	1587+64.75	SB RT	1649+71.37		6206.6	4	2758.5	1.5	231.7	275.8	5.5
SB LT	1316+37.26	SB LT	1502+40.24		18603.0	10	20670.0	1.5	1736.3	2067.0	41.3
SB LT	1502+35.17	SB LT	1587+45.25		8510.1	10	9455.6	1.5	794.3	945.6	18.9
SB LT	1587+64.75	SB LT	1649+71.37		6206.6	10	6896.2	1.5	579.3	689.6	13.8
				SUB-TOTAL =			117304.7		9853.6	11730.5	234.6
US 136 INTERCHANGE RAMPS											
RAMP CA NB RT	61+90.94	RT	62+58.44		67.50	8	60.0	1.5	5.0	6.0	0.1
RAMP CA NB RT	0+47.53	RT	0+92.53		45.00	8	40.0	1.5	3.4	4.0	0.1
RAMP DB SB LT	3+13.94	LT	7+38.28		424.34	8	377.2	1.5	31.7	37.7	0.8
RAMP DB SB LT	182+00.00	LT	183+24.92		124.92	8	111.0	1.5	9.3	11.1	0.2
RAMP DB SB LT	0+00.00	LT	1+14.02		114.02	8	101.4	1.5	8.5	10.1	0.2
RAMP DA NB RT	98+92.57	RT	109+60.88		1068.31	8	949.6	1.5	79.8	95.0	1.9
RAMP AC SB LT	126+62.40	LT	127+67.50		105.10	8	93.4	1.5	7.8	9.3	0.2
RAMP AC SB LT	2+14.56	LT	6+62.40		447.84	8	398.1	1.5	33.4	39.8	0.8
RAMP AC SB RT	126+62.40	RT	127+67.50		105.10	4	46.7	1.5	3.9	4.7	0.1
RAMP AC SB RT	5+62.40	RT	6+62.40		100.00	4	44.4	1.5	3.7	4.4	0.1
				SUB-TOTAL =			2221.8		186.6	222.2	4.4
							TOTAL =		10040.2	11952.7	239.1
							USE =		10040.0	11953.0	239.0

60260100 INLETS TO BE ADJUSTED

I-57 /US 136 RAMPS

STATION		EACH
1285+60	RT	1.0
1289+11	LT	1.0
TOTAL =		2.0

64200105 SHOULDER RUMBLE STRIP

		STATION	TO			STATION	LENGTH (FOOT
I-57 MAINLINE							
NB	RT	1270+24.74		NB	RT	1272+16.35	191.6
NB	LT	1270+24.74		NB	LT	1274+42.94	418.2
SB	RT	1270+24.74		SB	RT	1274+49.09	424.3
NB	RT	1276+42.86		NB	RT	1283+99.55	756.7
NB	LT	1276+42.86		NB	LT	1315+08.34	3865.5
SB	LT	1278+87.95		SB	LT	1289+28.16	1040.2
SB	LT	1276+49.01		SB	LT	1314+85.15	3836.1
NB	RT	1294+67.86		NB	RT	1315+08.34	2040.5
SB	RT	1292+75.99		SB	RT	1314+85.15	2209.2
NB	RT	1316+65.58		NB	RT	1502+40.24	18574.7
NB	RT	1502+35.17		NB	RT	1649+71.37	14736.2
NB	LT	1316+65.58		NB	LT	1502+40.24	18574.7
NB	LT	1502+35.17		NB	LT	1649+71.37	14736.2
SB	RT	1316+37.26		SB	RT	1502+40.24	18603.0
SB	RT	1502+35.17		SB	RT	1649+71.37	14736.2
SB	LT	1316+37.26		SB	LT	1502+40.24	18603.0
SB	LT	1502+35.17		SB	LT	1649+71.37	14736.2
						TOTAL =	148082.4
						USE	148083.0

78003110 PREFORMED PLASTIC PAVEMENT MARKING, TYPE B - LINE 4" (WHITE)

	STATION	TO		STATION	FOOT
I-57 MAINLINE (CENTER LINE SKIP DASH)					
NB	1270+24.74		NB	1274+42.94	104.5
SB	1270+24.74		SB	1274+49.09	106.1
NB	1276+42.86		NB	1314+63.34	955.1
SB	1276+49.01		SB	1314+85.15	959.0
NB	1316+65.58		NB	1502+40.24	4643.7
NB	1502+35.17		NB	1649+71.37	3684.1
SB	1316+37.26		SB	1502+40.24	4650.7
SB	1502+35.17		SB	1649+71.37	3684.1
				TOTAL =	18787.3
				USE =	18787.0

78000200 THERMOPLASTIC PAVEMENT MARKING LINE-4" (WHITE)

		STATION	TO		STATION	FOOT
I-57 MAINLINE						
NB	RT	1270+24.74		RT	1271+66.35	141.6
SB	LT	1279+37.95		LT	1288+78.16	940.2
NB	RT	1283+14.45		RT	1283+49.55	35.1
SB	LT	1292+75.99		LT	1314+85.25	2209.3
NB	RT	1294+67.86		RT	1315+08.34	2040.5
SB	LT	1316+37.26		LT	1502+40.24	18603.0
SB	LT	1502+35.17		LT	1649+71.37	14736.2
NB	RT	1316+65.58		RT	1502+40.24	18574.7
NB	RT	1502+35.17		RT	1649+71.37	14736.2
					SUB-TOTAL =	72016.7
US 136 INTERCHANGE RAMPS						
RAMP DB SB	LT	3+13.94		LT	7+38.28	424.3
RAMP CA NB	RT	61+90.94		RT	63+25.00	134.1
RAMP CA NB	RT	0+00.00		RT	0+92.53	92.5
RAMP CA NB	RT	2+92.45		RT	9+64.03	671.6
RAMP DA NB	RT	98+92.57		RT	109+60.88	1068.3
RAMP AC SB	LT	126+62.40		LT	127+67.50	105.1
RAMP AC SB	LT	2+14.56		LT	6+62.40	447.8
					SUB-TOTAL =	2943.8
					TOTAL =	74960.5
					USE =	74961.0

78000200 THERMOPLASTIC PAVEMENT MARKING LINE-4" (YELLOW)

		STATION	TO		STATION	FOOT
I-57 MAINLINE						
NB	LT	1270+24.74		LT	1274+42.94	418.2
SB	RT	1270+24.74		RT	1274+49.09	424.3
NB	LT	1276+42.86		LT	1315+08.34	3865.5
SB	RT	1276+49.01		RT	1314+85.15	3836.1
NB	LT	1316+65.58		LT	1502+40.24	18574.7
NB	LT	1502+35.17		LT	1649+71.37	14736.2
SB	RT	1316+37.26		RT	1502+40.20	18602.9
SB	RT	1502+35.17		RT	1649+71.37	14736.2
					TOTAL =	75194.2
					USE =	75195.0

78000500 THERMOPLASTIC PAVEMENT MARKING LINE-8" (WHITE)

			STATION	TO		STATION		FOOT
GORE AREAS								
I-57	NB	RT	1271+66.35		RT	1274+42.94		276.6
RAMP CA	NB	LT	61+40.94		LT	63+25.00		184.1
RAMP CA	NB	LT	0+00.00		LT	0+92.53		92.5
I-57	SB	LT	1277+63.03		LT	1279+37.95		174.9
RAMP DB	SB	RT	0+00.00		RT	0+37.51		37.5
RAMP DB	SB	RT	181+50.00		RT	183+24.92		174.9
I-57	NB	RT	1283+49.55		RT	1287+68.19		418.6
RAMP DA	NB	LT	98+42.57		LT	102+61.21		418.6
I-57	SB	LT	1288+78.16		LT	1290+87.02		208.9
RAMP AC	SB	RT	4+03.53		RT	6+12.40		208.9
							TOTAL =	2195.5
							USE =	2196.0

78100100 RAISED REFLECTIVE PAVEMENT MARKERS

			STATION	TO		STATION		FOOT	EACH
I-57 MAINLINE									
	NB	CL	1270+24.74		NB	CL	1274+42.94	418.2	10
	NB	RT	1271+66.35		NB	RT	1274+42.94	GORE 276.6	7
	SB	CL	1270+24.74		SB	CL	1274+49.09	424.3	11
	NB	CL	1276+42.86		NB	CL	1314+63.34	3820.5	96
	SB	CL	1276+49.01		SB	CL	1314+85.15	3836.1	96
	SB	LT	1277+63.03		SB	LT	1279+37.95	GORE 174.9	4
	NB	RT	1283+49.55		NB	RT	1287+68.19	GORE 418.6	10
	SB	LT	1288+78.16		SB	LT	1290+87.02	GORE 208.9	5
	NB	CL	1316+65.58		NB	CL	1502+40.24	18574.7	464
	NB	CL	1502+35.17		NB	CL	1649+71.37	14736.2	368
	SB	CL	1316+37.26		SB	CL	1502+40.24	18603.0	465
	SB	CL	1502+35.17		SB	CL	1649+71.37	14736.2	368
							SUB-TOTAL =		1906
US 136 INTERCHANGE									
RAMP CA	NB	RT	061+90.40		NB	RT	063+25.00	134.6	7
RAMP CA	NB	LT	61+40.94		NB	LT	63+25.00	GORE 184.1	5
RAMP CA	NB	LT	0+00.00		NB	LT	0+92.53	GORE 92.5	2
RAMP DB	SB	RT	0+00.00		SB	RT	0+37.51	37.5	1
RAMP DB	SB	LT	0+00.00		SB	LT	1+14.02	GORE 114.0	6
RAMP DB	SB	RT	181+50.00		SB	RT	183+24.92	174.9	17
RAMP DB	SB	RT	181+32.50		SB	RT	183+24.92	192.4	5
RAMP DA	NB	LT	98+42.57		NB	LT	102+61.21	GORE 418.6	10
RAMP AC	SB	RT	4+03.53		SB	RT	6+12.40	208.9	5
RAMP AC	SB	LT	126+62.40		SB	LT	127+67.50	GORE 105.1	5
RAMP AC	SB	LT	2+14.56		SB	LT	6+62.40	GORE 447.8	22
							SUB-TOTAL =		86
							TOTAL =		1992

70300100 SHORT-TERM PAVEMENT MARKING

	STATION	TO		STATION	MILLING FOOT	(BOTTOM LIFT) SURFACE FOOT	(TOP LIFT) SURFACE FOOT	TOTAL FOOT	70301000 WK ZN PVT MK REM SQ FT
I-57 MAINLINE									
NB	1270+24.74		NB	1274+42.94	41.8	41.8	41.8	125.5	13.8
SB	1270+24.74		SB	1274+49.09	42.4	42.4	42.4	127.3	14.0
NB	1276+42.86		NB	1314+63.34	382.0	382.0	382.0	1146.1	126.1
SB	1276+49.01		SB	1314+85.15	383.6	383.6	383.6	1150.8	126.6
NB	1316+65.58		NB	1346+18.03	295.2	295.2	295.2	885.7	97.4
SB	1316+37.26		SB	1345+92.31	295.5	295.5	295.5	886.5	97.5
NB	1346+18.03		NB	1348+18.03	20.0	20.0	20.0	60.0	6.6
SB	1345+92.31		SB	1347+92.31	20.0	20.0	20.0	60.0	6.6
NB	1348+18.03		NB	1408+60.50	604.2	604.2	604.2	1812.7	199.4
SB	1347+92.31		SB	1408+34.78	604.2	604.2	604.2	1812.7	199.4
NB	1408+60.50		NB	1410+60.50	20.0	20.0	20.0	60.0	6.6
SB	1408+34.78		SB	1410+34.78	20.0	20.0	20.0	60.0	6.6
NB	1410+60.50		NB	1471+40.13	608.0	608.0	608.0	1823.9	200.6
SB	1410+34.78		SB	1471+14.41	608.0	608.0	608.0	1823.9	200.6
NB	1471+40.13		NB	1473+40.13	20.0	20.0	20.0	60.0	6.6
SB	1471+14.41		SB	1473+14.41	20.0	20.0	20.0	60.0	6.6
NB	1473+40.13		NB	1502+40.24	290.0	290.0	290.0	870.0	95.7
NB	1502+35.17		NB	1532+05.54	297.0	297.0	297.0	891.1	98.0
SB	1473+14.41		SB	1502+40.24	292.6	292.6	292.6	877.7	96.6
SB	1502+35.17		SB	1532+05.54	297.0	297.0	297.0	891.1	98.0
NB	1532+05.54		NB	1534+05.54	20.0	20.0	20.0	60.0	6.6
SB	1532+05.54		SB	1534+05.54	20.0	20.0	20.0	60.0	6.6
NB	1534+05.54		NB	1589+75.06	557.0	557.0	557.0	1670.9	183.8
SB	1534+05.54		SB	1589+49.34	554.4	554.4	554.4	1663.1	182.9
NB	1589+75.06		NB	1591+75.06	20.0	20.0	20.0	60.0	6.6
SB	1589+49.34		SB	1591+49.34	20.0	20.0	20.0	60.0	6.6
NB	1591+75.06		NB	1649+71.37	579.6	579.6	579.6	1738.9	191.3
SB	1591+49.34		SB	1649+71.37	582.2	582.2	582.2	1746.6	192.1
							SUB-TOTAL =	22544.8	2479.9
I-57 MAINLINE SHOULDER									
NB RT	1270+24.74		NB RT	1272+16.35	7.7	7.7	7.7	23.0	2.5
NB LT	1270+24.74		NB LT	1274+42.94	16.7	16.7	16.7	50.2	5.5
SB RT	1270+24.74		SB RT	1274+49.09	17.0	17.0	17.0	50.9	5.6
NB RT	1276+42.86		NB RT	1283+99.55	30.3	30.3	30.3	90.8	10.0
NB LT	1276+42.86		NB LT	1315+08.34	154.6	154.6	154.6	463.9	51.0
SB LT	1278+87.95		SB LT	1289+28.16	41.6	41.6	41.6	124.8	13.7
SB LT	1276+49.01		SB LT	1314+85.15	153.4	153.4	153.4	460.3	50.6
NB RT	1294+67.86		NB RT	1315+08.34	81.6	81.6	81.6	244.9	26.9
SB RT	1292+75.99		SB RT	1314+85.15	88.4	88.4	88.4	265.1	29.2
NB RT	1316+65.58		NB RT	1502+40.24	743.0	743.0	743.0	2229.0	245.2
NB RT	1502+35.17		NB RT	1649+71.37	589.4	589.4	589.4	1768.3	194.5
NB LT	1316+65.58		NB LT	1502+40.24	743.0	743.0	743.0	2229.0	245.2
NB LT	1502+35.17		NB LT	1649+71.37	589.4	589.4	589.4	1768.3	194.5
SB RT	1316+37.26		SB RT	1502+40.24	744.1	744.1	744.1	2232.4	245.6
SB RT	1502+35.17		SB RT	1649+71.37	589.4	589.4	589.4	1768.3	194.5
SB LT	1316+37.26		SB LT	1502+40.24	744.1	744.1	744.1	2232.4	245.6
SB LT	1502+35.17		SB LT	1649+71.37	589.4	589.4	589.4	1768.3	194.5
							SUB-TOTAL =	17769.9	1954.7
US 136 INTERCHANGE SHOULDERS									
RAMP CA NB RT	61+90.94		RT	62+58.44	2.7	0.0	2.7	5.4	0.9
RAMP CA NB RT	0+47.53		RT	0+92.53	1.8	0.0	1.8	3.6	0.6
RAMP DB SB LT	3+13.94		LT	7+38.28	17.0	0.0	17.0	33.9	5.6
RAMP DB SB LT	182+00.00		LT	183+24.92	5.0	0.0	5.0	10.0	1.6
RAMP DB SB LT	0+00.00		LT	1+14.02	4.6	0.0	4.6	9.1	1.5
RAMP DA NB RT	98+92.57		RT	109+60.88	42.7	0.0	42.7	85.5	14.1
RAMP AC SB LT	126+62.40		LT	127+67.50	4.2	0.0	4.2	8.4	1.4
RAMP AC SB LT	2+14.56		LT	6+62.40	17.9	0.0	17.9	35.8	5.9
RAMP AC SB RT	126+62.40		RT	127+67.50	4.2	0.0	4.2	8.4	1.4
RAMP AC SB RT	5+62.40		RT	6+62.40	4.0	0.0	4.0	8.0	1.3
							SUB-TOTAL =	208.2	34.3
							TOTAL =	40522.8	4469.0
							USE =	40523.0	4469.0

SCHEDULE OF CLASS A PATCHING, 10"

STATION	DIRECTION	LANE	LENGTH (FT)	WIDTH (FT)	44200553 TYPE II (SQ YD)	44213200 SAW CUTS (FT)	44213000 PATCHING REINFORCEMENT (SQ YD)
1376+18.00	NORTHBOUND	DRIVING	8	12	10.7	56.0	10.7
1382+60.00	NORTHBOUND	DRIVING	6	12	8.0	54.0	8.0
1415+51.00	NORTHBOUND	DRIVING	6	12	8.0	54.0	8.0
1427+59.00	NORTHBOUND	DRIVING	8	12	10.7	56.0	10.7
1427+84.00	NORTHBOUND	PASSING	8	12	10.7	56.0	10.7
1587+26.00	NORTHBOUND	DRIVING	6	12	8.0	54.0	8.0
1587+26.00	NORTHBOUND	PASSING	6	12	8.0	54.0	8.0
1587+86.00	NORTHBOUND	DRIVING	6	12	8.0	54.0	8.0
1587+86.00	NORTHBOUND	PASSING	6	12	8.0	54.0	8.0
					0.0	0.0	0.0
1357+02.00	SOUTHBOUND	DRIVING	6	12	8.0	54.0	8.0
1440+29.00	SOUTHBOUND	DRIVING	10	12	13.3	58.0	13.3
1440+70.00	SOUTHBOUND	DRIVING	6	12	8.0	54.0	8.0
1447+25.00	SOUTHBOUND	DRIVING	8	12	10.7	56.0	10.7
1450+17.00	SOUTHBOUND	DRIVING	6	12	8.0	54.0	8.0
1454+87.00	SOUTHBOUND	DRIVING	10	12	13.3	60.0	13.3
1463+84.00	SOUTHBOUND	DRIVING	10	12	13.3	58.0	13.3
1493+26.00	SOUTHBOUND	DRIVING	6	12	8.0	54.0	8.0
1507+02.00	SOUTHBOUND	PASSING	6	12	8.0	54.0	8.0
1587+24.00	SOUTHBOUND	DRIVING	6	12	8.0	54.0	8.0
1587+24.00	SOUTHBOUND	PASSING	6	12	8.0	54.0	8.0
1587+84.00	SOUTHBOUND	DRIVING	6	12	8.0	54.0	8.0
1587+84.00	SOUTHBOUND	PASSING	6	12	8.0	54.0	8.0
1619+87.00	SOUTHBOUND	DRIVING	6	12	8.0	54.0	8.0
1646+23.00	SOUTHBOUND	DRIVING	8	12	10.7	56.0	10.7
				TOTAL=	221.3	1320.0	221.3
				USE=	221.0	1320.0	221.0

SCHEDULE OF CLASS A PATCHES (SPECIAL)

STATION	DIRECTION	LANE	LENGTH (FT)	WIDTH (FT)	#5000916 CLASS A PATCHES (SPECIAL) (SQ YD)	44213200 SAW CUTS (FT)	44213000 PATCHING REINFORCEMENT (SQ YD)
1277+61.00	NORTHBOUND	RAMP	6	12	8.0	54.0	8.0
1277+61.00	NORTHBOUND	DRIVING	6	12	8.0	54.0	8.0
1277+61.00	NORTHBOUND	PASSING	6	12	8.0	54.0	8.0
1287+73.00	NORTHBOUND	RAMP	8	16	14.2	72.0	14.2
1289+90.00	NORTHBOUND	RAMP	6	12	8.0	54.0	8.0
1296+05.00	NORTHBOUND	DRIVING	6	12	8.0	54.0	8.0
1299+32.00	NORTHBOUND	DRIVING	6	12	8.0	54.0	8.0
1299+52.00	NORTHBOUND	DRIVING	6	12	8.0	54.0	8.0
1316+96.00	NORTHBOUND	DRIVING	6	12	8.0	54.0	8.0
1316+96.00	NORTHBOUND	PASSING	6	12	8.0	54.0	8.0
1321+45.00	NORTHBOUND	DRIVING	6	12	8.0	54.0	8.0
1321+76.00	NORTHBOUND	DRIVING	6	12	8.0	54.0	8.0
1328+52.00	NORTHBOUND	DRIVING	6	12	8.0	54.0	8.0
1330+06.00	NORTHBOUND	DRIVING	6	12	8.0	54.0	8.0
1331+65.00	NORTHBOUND	DRIVING	8	12	10.7	56.0	10.7
1335+31.00	NORTHBOUND	DRIVING	6	12	8.0	54.0	8.0
					0.0	0.0	0.0
1273+19.00	SOUTHBOUND	RAMP	6	12	8.0	54.0	8.0
1273+19.00	SOUTHBOUND	DRIVING	6	12	8.0	54.0	8.0
1273+19.00	SOUTHBOUND	PASSING	6	12	8.0	54.0	8.0
1282+18.00	SOUTHBOUND	DRIVING	6	12	8.0	54.0	8.0
1282+18.00	SOUTHBOUND	PASSING	6	12	8.0	54.0	8.0
1296+29.00	SOUTHBOUND	DRIVING	8	12	10.7	56.0	10.7
1313+15.00	SOUTHBOUND	DRIVING	8	12	10.7	56.0	10.7
1314+35.00	SOUTHBOUND	DRIVING	6	12	8.0	54.0	8.0
1314+35.00	SOUTHBOUND	PASSING	6	12	8.0	54.0	8.0
1316+78.00	SOUTHBOUND	DRIVING	6	12	8.0	54.0	8.0
1316+78.00	SOUTHBOUND	PASSING	6	12	8.0	54.0	8.0
1329+87.00	SOUTHBOUND	DRIVING	6	12	8.0	54.0	8.0
1334+13.00	SOUTHBOUND	DRIVING	6	12	8.0	54.0	8.0
				TOTAL=	246.2	1590.0	246.2
				USE=	246.0	1590.0	246.0

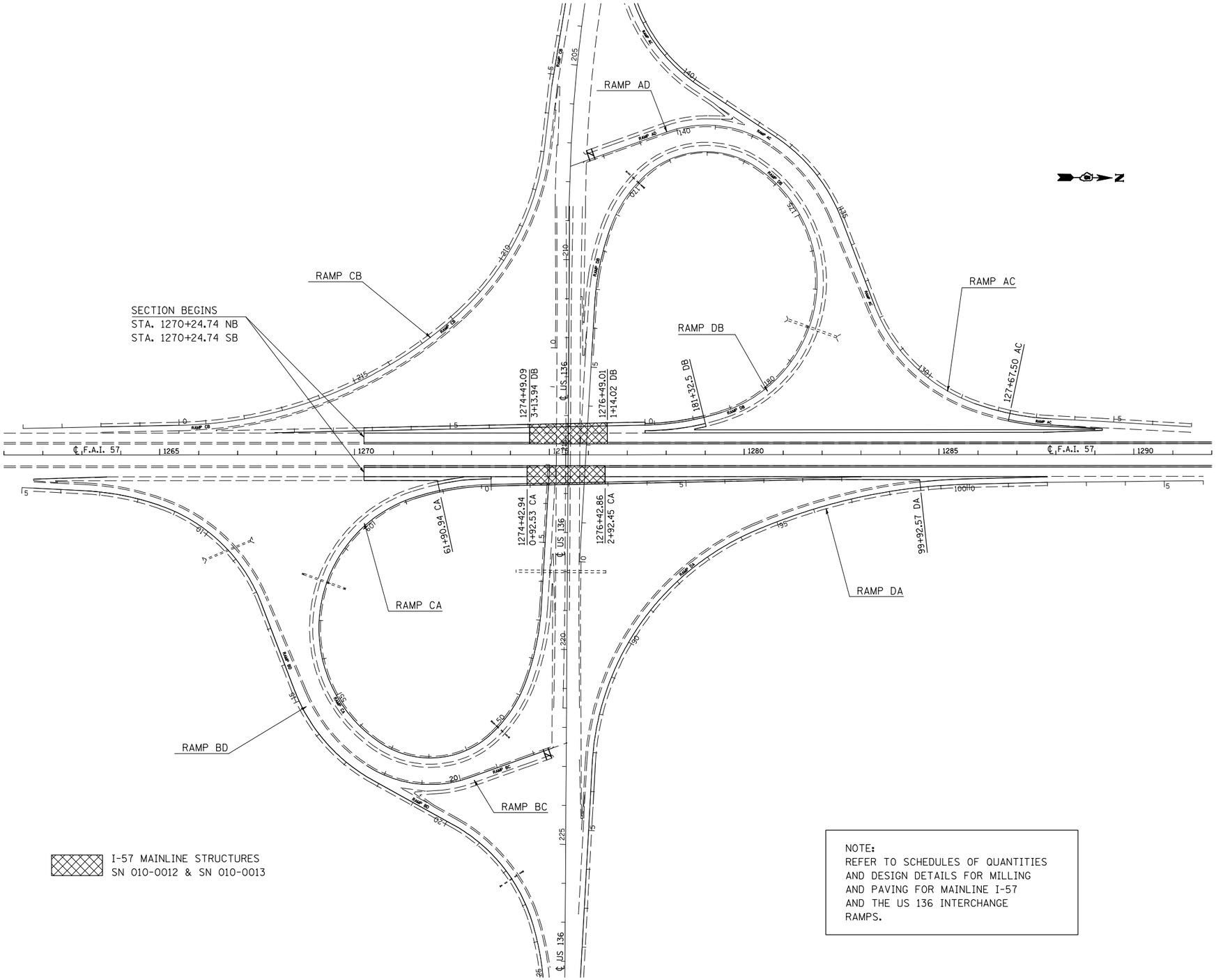

NOTE:
REFER TO SCHEDULES OF QUANTITIES AND DESIGN DETAILS FOR MILLING AND PAVING FOR MAINLINE I-57 AND THE US 136 INTERCHANGE RAMPS.

FILE NAME = c:\pw_work\pwidot\bowerml\d0110023\70766DETAILS.DGN	USER NAME = bowerml	DESIGNED - JMS	REVISED -	STATE OF ILLINOIS DEPARTMENT OF TRANSPORTATION	LOCATION MAP FOR US 136 INTERCHANGE	F.A.I. RTE.	SECTION	COUNTY	TOTAL SHEETS / SHEET NO.
		DRAWN - JMS	REVISED -			57	10-37RS-2&(10,27-38)RS-1	CHAMPAIGN	41 / 21
	PLOT SCALE = 40.0000 ' / IN.	CHECKED -	REVISED -					CONTRACT NO. 70766	
	PLOT DATE = 12/2/2009	DATE - 02-20-2009	REVISED -		SCALE: 21 / SHEET NO. OF SHEETS / STA. TO STA.		ILLINOIS FED. AID PROJECT		

DETAIL FOR MILLING TRANSITION AT BEGINNING & ENDING OF PROJECT, 1 1/2" – 3"

NB & SB STATION 1270+24.74 TO STATION 1270+77.24
NB & SB STATION 1649+18.87 TO STATION 1649+71.37
RAMP CA SB STATION 6+85.78 TO STATION 7+38.28

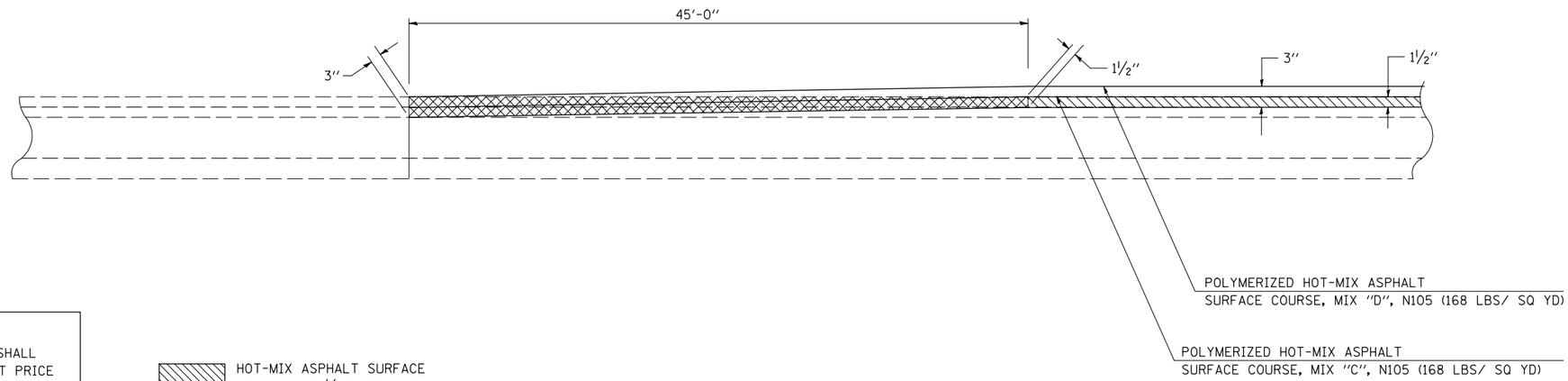

NOTE:
AREA OF MILLING TRANSITION SHALL BE INCLUDED IN CONTRACT UNIT PRICE FOR THE HOT-MIX ASPHALT SURFACE REMOVAL - 1½". NO ADDITIONAL COMPENSATION SHALL BE ALLOWED.

HOT-MIX ASPHALT SURFACE REMOVAL - 1½"

MILLING TRANSITION AREA

NOT TO SCALE

DETAIL FOR MILLING TRANSITION AT MAINLINE STRUCTURES

NB STATION 1273+97.94 TO STATION 1274+42.94 (S.N. 010-0013)
SB STATION 1274+04.09 TO STATION 1274+49.09 (S.N. 010-0012)
NB STATION 1276+42.86 TO STATION 1276+87.86 (S.N. 010-0013)
SB STATION 1276+49.01 TO STATION 1276+94.01 (S.N. 010-0012)
RAMP CA NB STATION 0+47.53 TO STATION 0+92.53 (S.N. 010-0013)
RAMP DB SB STATION 3+13.94TO STATION 3+58.94 (S.N. 010-0012)
RAMP AC NB STATION 2+92.45 TO STATION 3+37.45 (S.N. 010-0013)
RAMP DB SB STATION 0+69.02 TO STATION 1+14.02 (S.N. 010-0012)
NB STATION 1314+63.34 TO STATION 1315+08.34 (S.N. 010-0191)
SB STATION 1314+40.15 TO STATION 1314+85.15 (S.N. 010-0192)
NB STATION 1316+65.58 TO STATION 1317+10.58 (S.N. 010-0191)
SB STATION 1316+37.26 TO STATION 1316+82.26 (S.N. 010-0192)

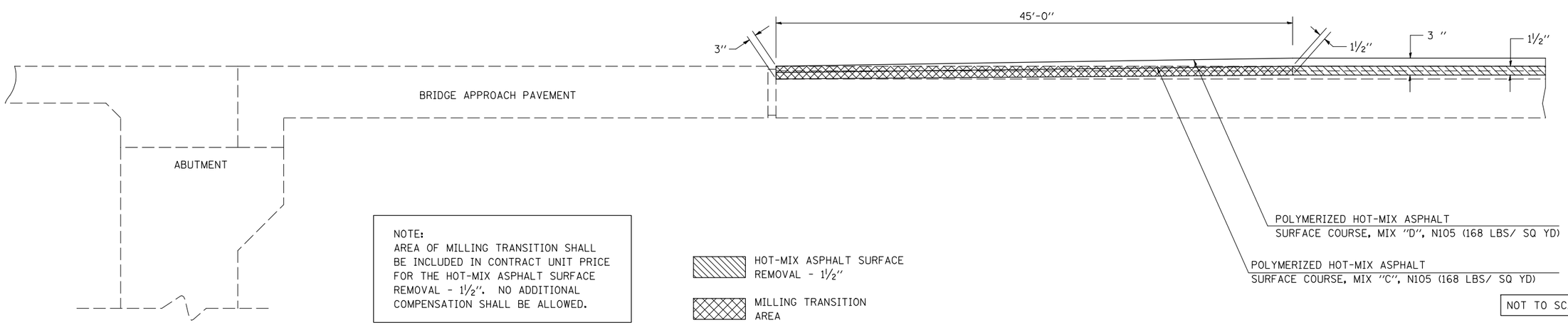

NOTE:
AREA OF MILLING TRANSITION SHALL BE INCLUDED IN CONTRACT UNIT PRICE FOR THE HOT-MIX ASPHALT SURFACE REMOVAL - 1½". NO ADDITIONAL COMPENSATION SHALL BE ALLOWED.

HOT-MIX ASPHALT SURFACE REMOVAL - 1½"

MILLING TRANSITION AREA

NOT TO SCALE

FILE NAME = c:\pw_work\pwidot\bowerml\d0110023\70766DETAILS.DGN	USER NAME = bowerml	DESIGNED - JMS	REVISED -
		DRAWN - JMS	REVISED -
	PLOT SCALE = 40.0000 ' / IN.	CHECKED -	REVISED -
	PLOT DATE = 12/2/2009	DATE - 02-20-2009	REVISED -

STATE OF ILLINOIS
DEPARTMENT OF TRANSPORTATION

DETAILS FOR MILLING TRANSITIONS

SCALE: | SHEET NO. 1 OF 5 SHEETS | STA. | TO STA.

F.A.I. RTE.	SECTION	COUNTY	TOTAL SHEETS	SHEET NO.
57	10-37RS-2&(10,27-38)RS-1	CHAMPAIGN	41	22

CONTRACT NO. 70766

ILLINOIS FED. AID PROJECT

DETAIL FOR RESURFACING MAINLINE PAVEMENT UNDER STRUCTURES

NOTE:
AREA OF MILLING TRANSITION SHALL BE INCLUDED IN CONTRACT UNIT PRICE FOR THE HOT-MIX ASPHALT SURFACE REMOVAL - 1½". NO ADDITIONAL COMPENSATION SHALL BE ALLOWED.

NB STATION 1407+60.50 TO STATION 1411+60.50 (S.N. 010-0162)
SB STATION 1470+14.41 TO STATION 1474+14.41 (S.N. 010-0161)

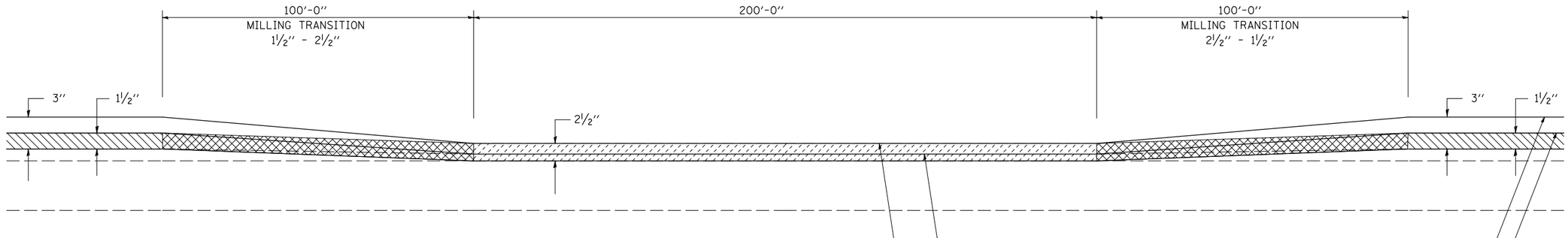

HOT-MIX ASPHALT SURFACE REMOVAL, 1½"

MILLING TRANSITION AREA

HOT-MIX ASPHALT SURFACE REMOVAL, 2½"

UPON COMPLETION OF THE PROJECT, THE VERTICAL CLEARANCES OF ALL AFFECTED OVERHEAD STRUCTURES SHALL BE VERIFIED AND REPORTED TO THE BUREAU OF OPERATIONS BY THE RESIDENT ENGINEER.

NOT TO SCALE

DETAIL FOR RESURFACING MAINLINE PAVEMENT UNDER STRUCTURES

NOTE:
AREA OF MILLING TRANSITION SHALL BE INCLUDED IN CONTRACT UNIT PRICE FOR THE HOT-MIX ASPHALT SURFACE REMOVAL - 1½". NO ADDITIONAL COMPENSATION SHALL BE ALLOWED.

NB STATION 1345+18.03 TO STATION 1349+18.03 (S.N. 010-0163)
SB STATION 1344+92.31 TO STATION 1348+92.31 (S.N. 010-0163)
SB STATION 1407+34.78 TO STATION 1411+34.78 (S.N. 010-0162)
NB STATION 1470+40.13 TO STATION 1474+40.13 (S.N. 010-0161)

NB STATION 1531+05.54 TO STATION 1535+05.54 (S.N. 010-0189)
SB STATION 1531+05.54 TO STATION 1535+05.54 (S.N. 010-0189)
NB STATION 1588+75.06 TO STATION 1592+75.06 (S.N. 010-0082)
SB STATION 1588+49.34 TO STATION 1592+49.34 (S.N. 010-0082)

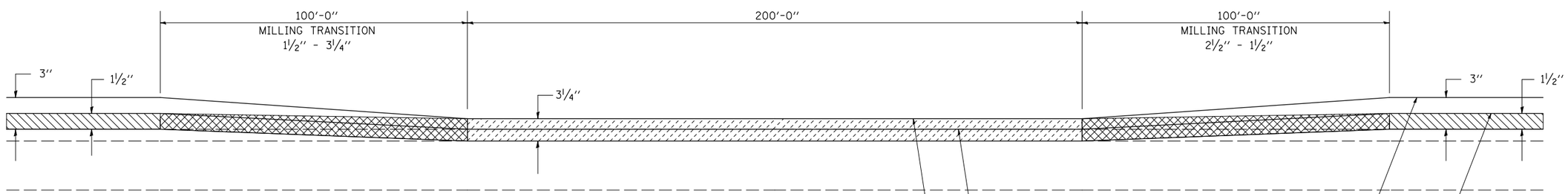

HOT-MIX ASPHALT SURFACE REMOVAL, 1½"

MILLING TRANSITION AREA

HOT-MIX ASPHALT SURFACE REMOVAL, 3¼"

UPON COMPLETION OF THE PROJECT, THE VERTICAL CLEARANCES OF ALL AFFECTED OVERHEAD STRUCTURES SHALL BE VERIFIED AND REPORTED TO THE BUREAU OF OPERATIONS BY THE RESIDENT ENGINEER.

NOT TO SCALE

FILE NAME = c:\pw_work\pwidot\bowerml\d0110023\70766DETAILS.DGN	USER NAME = bowerml	DESIGNED - JMS	REVISED -
		DRAWN - JMS	REVISED -
	PLOT SCALE = 40.0000 ' / IN.	CHECKED -	REVISED -
	PLOT DATE = 12/2/2009	DATE - 02-20-2009	REVISED -

STATE OF ILLINOIS
DEPARTMENT OF TRANSPORTATION

DETAILS FOR MILLING TRANSITIONS

SCALE: | SHEET NO. 2 OF 5 SHEETS | STA. | TO STA.

F.A.I. RTE.	SECTION	COUNTY	TOTAL SHEETS	SHEET NO.
57	10-37RS-2&(10,27-38)RS-1	CHAMPAIGN	41	23

CONTRACT NO. 70766

ILLINOIS FED. AID PROJECT

DETAIL FOR HOT-MIX ASPHALT SURFACE REMOVAL-BUTT JOINT AT MAINLINE SHOULDERS BEGINNING AND ENDING OF PROJECT

NB & SB STATION 1270+32.24 TO STATION 1270+77.24
NB & SB STATION 1649+18.87 TO STATION 1649+63.87

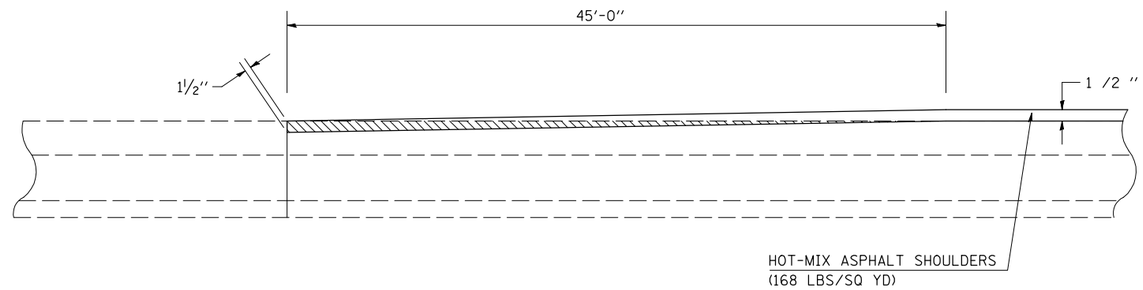

HOT-MIX ASPHALT SURFACE REMOVAL - BUTT JOINT

NOT TO SCALE

DETAIL FOR HOT-MIX ASPHALT SURFACE REMOVAL-BUTT JOINT AT MAINLINE STRUCTURE SHOULDERS

NB STATION 1273+97.94 TO STATION 1274+42.94 (S.N. 010-0013)
SB STATION 1274+04.09 TO STATION 1274+49.09 (S.N. 010-0012)
NB STATION 1276+42.86 TO STATION 1276+87.86 (S.N. 010-0013)
SB STATION 1276+49.01 TO STATION 1276+94.01 (S.N. 010-0012)
RAMP CA NB STATION 0+47.53 TO STATION 0+92.53 (S.N. 010-0013)
RAMP DB SB STATION 3+13.94TO STATION 3+58.94 (S.N. 010-0012)
RAMP AC NB STATION 2+92.45 TO STATION 3+37.45 (S.N. 010-0013)
RAMP DB SB STATION 0+69.02 TO STATION 1+14.02 (S.N. 010-0012)
NB STATION 1314+63.34 TO STATION 1315+08.34 (S.N. 010-0191)
SB STATION 1314+40.15 TO STATION 1314+85.15 (S.N. 010-0192)
NB STATION 1316+65.58 TO STATION 1317+10.58 (S.N. 010-0191)
SB STATION 1316+37.26 TO STATION 1316+82.26 (S.N. 010-0192)

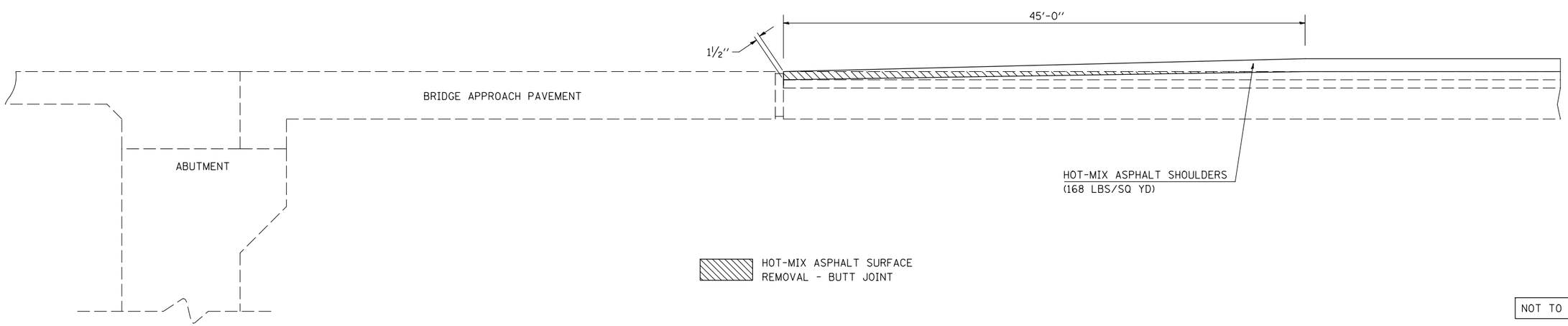

HOT-MIX ASPHALT SURFACE REMOVAL - BUTT JOINT

NOT TO SCALE

FILE NAME =	USER NAME = bowerml	DESIGNED - JMS	REVISED -	STATE OF ILLINOIS DEPARTMENT OF TRANSPORTATION	DETAILS FOR MILLING TRANSITIONS	F.A.I. RTE.	SECTION	COUNTY	TOTAL SHEETS / SHEET NO.
c:\pw_work\pwidot\bowerml\d0110023\70766DETAILS.DGN		DRAWN - JMS	REVISED -			57	10-37RS-2&(10,27-38)RS-1	CHAMPAIGN	41 / 24
	PLOT SCALE = 40.0000 ' / IN.	CHECKED -	REVISED -					CONTRACT NO. 70766	
	PLOT DATE = 12/2/2009	DATE - 02-20-2009	REVISED -		SCALE: / SHEET NO. 3 OF 5 SHEETS / STA. / TO STA.		ILLINOIS	FED. AID PROJECT	

DETAIL FOR MILLING TRANSITION AT S.N. 010–8311 & S.N. 010–8312 MAINLINE

STATION 1587+00.25 TO STATION 1587+45.25 (S.N. 010-8311 & 010-8312)
STATION 1587+64.75 TO STATION 1588+09.75 (S.N. 010-8311 & 010-8312)

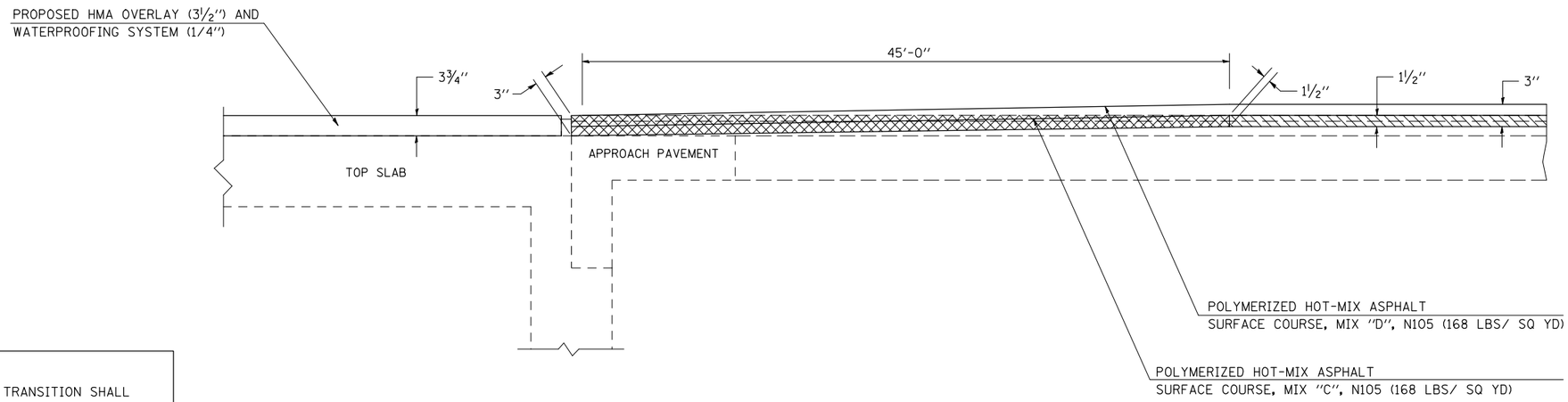

NOTE:
AREA OF MILLING TRANSITION SHALL BE INCLUDED IN CONTRACT UNIT PRICE FOR THE HOT-MIX ASPHALT SURFACE REMOVAL - 1½". NO ADDITIONAL COMPENSATION SHALL BE ALLOWED.

HOT-MIX ASPHALT SURFACE REMOVAL - 1½"

MILLING TRANSITION AREA

NOT TO SCALE

DETAIL FOR HOT–MIX ASPHALT SURFACE REMOVAL–BUTT JOINT AT S.N. 010–8311 & 010–8312 SHOULDERS

STATION 1587+00.25 TO STATION 1587+45.25 (S.N. 010-8311 & 010-8312)
STATION 1587+64.75 TO STATION 1588+09.75 (S.N. 010-8311 & 010-8312)

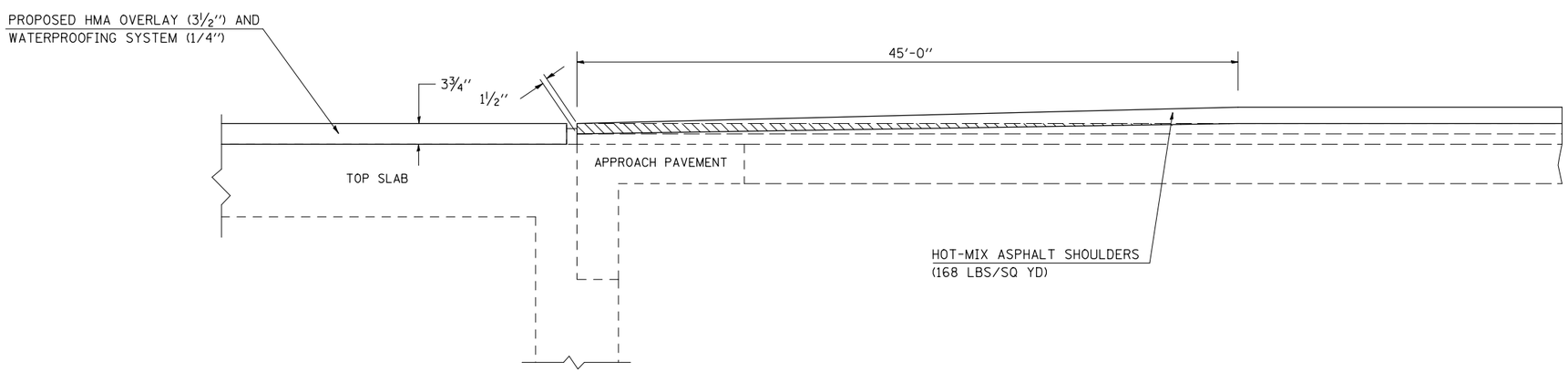

HOT-MIX ASPHALT SURFACE REMOVAL - BUTT JOINT

NOT TO SCALE

FILE NAME =	USER NAME = bowerml	DESIGNED - MLB	REVISED -	STATE OF ILLINOIS DEPARTMENT OF TRANSPORTATION	DETAILS FOR MILLING TRANSITIONS	F.A.I. RTE.	SECTION	COUNTY	TOTAL SHEETS	SHEET NO.
c:\pw_work\pwidot\bowerml\d0110023\70766DETAILS.DGN		DRAWN - MLB	REVISED -			57	10-37RS-2&(10,27-38)RS-1	CHAMPAIGN	41	25
	PLOT SCALE = 40.0000 ' / IN.	CHECKED -	REVISED -					CONTRACT NO. 70766		
	PLOT DATE = 12/2/2009	DATE - 05-04-2009	REVISED -		SCALE: SHEET NO. 3 OF 5 SHEETS STA. TO STA.		ILLINOIS FED. AID PROJECT			

DETAIL FOR RESURFACING SHOULDERS UNDER STRUCTURES

NOTE:
AREA OF MILLING TRANSITION SHALL BE INCLUDED IN CONTRACT UNIT PRICE FOR THE HOT-MIX ASPHALT SURFACE REMOVAL - 1½". NO ADDITIONAL COMPENSATION SHALL BE ALLOWED.

NB STATION 1345+18.03 TO STATION 1349+18.03 (S.N. 010-0163)
SB STATION 1344+92.31 TO STATION 1348+92.31 (S.N. 010-0163)
NB STATION 1407+60.50 TO STATION 1411+60.50 (S.N. 010-0162)
SB STATION 1407+34.78 TO STATION 1411+34.78 (S.N. 010-0162)
NB STATION 1470+40.13 TO STATION 1474+40.13 (S.N. 010-0161)
SB STATION 1470+14.41 TO STATION 1474+14.41 (S.N. 010-0161)

NB STATION 1531+05.54 TO STATION 1535+05.54 (S.N. 010-0189)
SB STATION 1531+05.54 TO STATION 1535+05.54 (S.N. 010-0189)
NB STATION 1588+75.06 TO STATION 1592+75.06 (S.N. 010-0082)
SB STATION 1588+49.34 TO STATION 1592+49.34 (S.N. 010-0082)

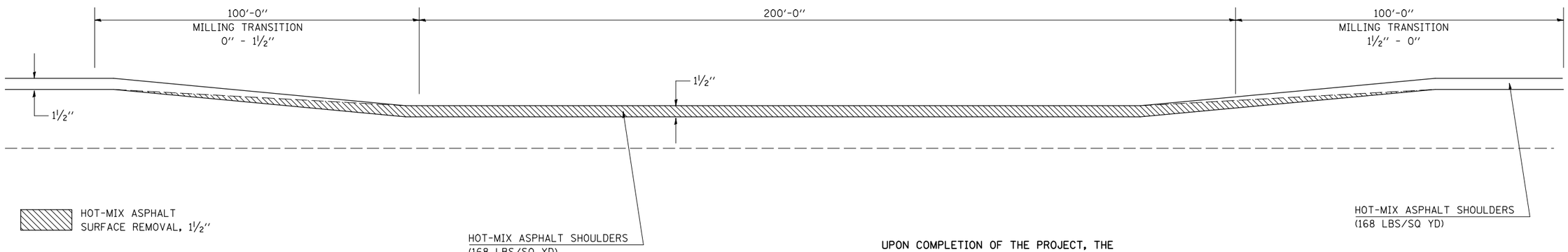

UPON COMPLETION OF THE PROJECT, THE VERTICAL CLEARANCES OF ALL AFFECTED OVERHEAD STRUCTURES SHALL BE VERIFIED AND REPORTED TO THE BUREAU OF OPERATIONS BY THE RESIDENT ENGINEER.

NOT TO SCALE

DETAIL FOR HOT-MIX ASPHALT SURFACE REMOVAL - BUTT JOINT AT INTERCHANGE RAMPS

NOTE:
AREA OF MILLING TRANSITION SHALL BE INCLUDED IN CONTRACT UNIT PRICE FOR THE HOT-MIX ASPHALT SURFACE REMOVAL - 1½". NO ADDITIONAL COMPENSATION SHALL BE ALLOWED.

(RAMP CA) STATION 61+90.40 TO STATION 62+58.44
(RAMP DB) STATION 181+32.50 TO STATION 182+00.00
(RAMP AC) STATION 127+00.00 TO STATION 127+67.50
(RAMP DA) STATION 98+92.57 TO STATION 98+25.07

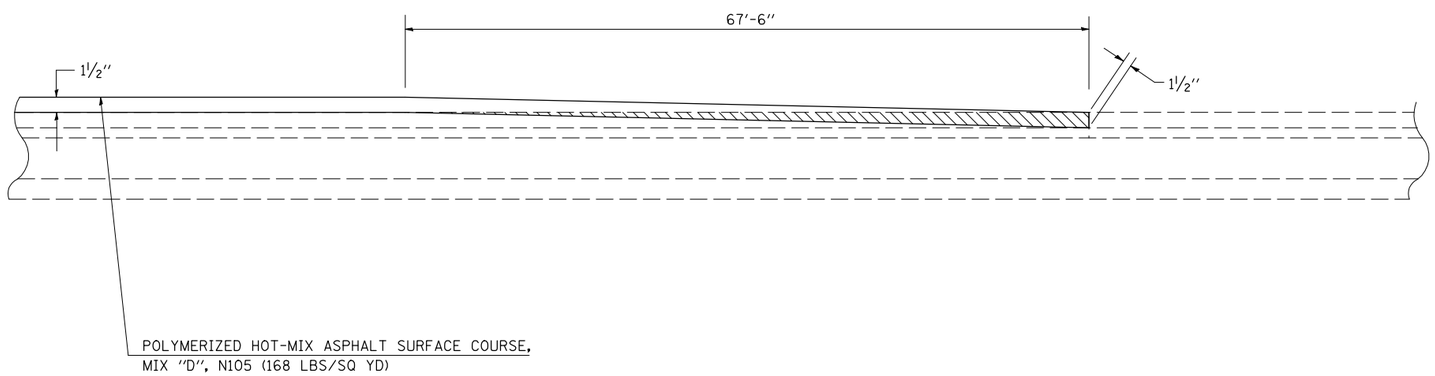

NOT TO SCALE

FILE NAME = c:\pw_work\pwidot\bowerml\d0110023\70766DETAILS.DGN	USER NAME = bowerml	DESIGNED - JMS	REVISED -	STATE OF ILLINOIS DEPARTMENT OF TRANSPORTATION	DETAILS FOR MILLING TRANSITIONS			F.A.I. RTE.	SECTION	COUNTY	TOTAL SHEETS	SHEET NO.
		DRAWN - JMS	REVISED -					57	10-37RS-2&(10,27-38)RS-1	CHAMPAIGN	41	26
	PLOT SCALE = 40.0000 ' / IN.	CHECKED -	REVISED -							CONTRACT NO. 70766		
	PLOT DATE = 12/2/2009	DATE - 02-20-2009	REVISED -		SCALE:	SHEET NO. 4 OF 5 SHEETS	STA. TO STA.		ILLINOIS FED. AID PROJECT			

DETAIL FOR HOT-MIX ASPHALT SURFACE REMOVAL-BUTT JOINT AT INTERCHANGE RAMP SHOULDERS

(RAMP CA) STATION 61+90.40 TO STATION 62+58.44
(RAMP DB) STATION 181+32.50 TO STATION 182+00.00
(RAMP AC) STATION 127+00.00 TO STATION 127+67.50
(RAMP DA) STATION 98+92.57 TO STATION 98+25.07

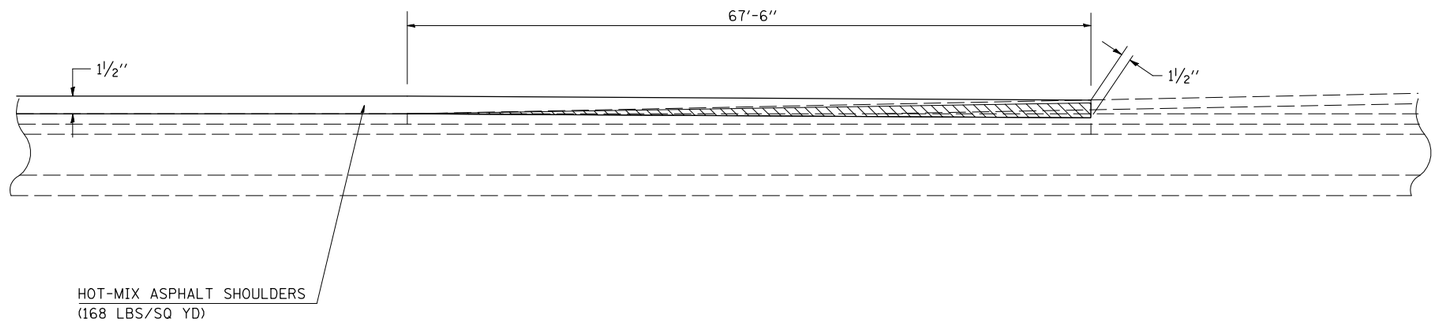

HOT-MIX ASPHALT SURFACE REMOVAL - BUTT JOINT

DETAIL FOR MEDIAN CROSSOVER TO BE RECONSTRUCTED

STATION 1395+81.00

CROSSOVERS STATION	AREA (SQ YD)	40800010 BIT MATLS PR CT (GALLON)	40800030 AGG PR CT (TON)	40800050 INCID HMA SURFACE (TON)	48101200 AGG SHLD (TON)
1395+81	300	22.0	0.6	25.0	2.2
	TOTAL =	22.0	0.6	25.0	2.2
	USE =	22.0	1.0	25.0	2.0

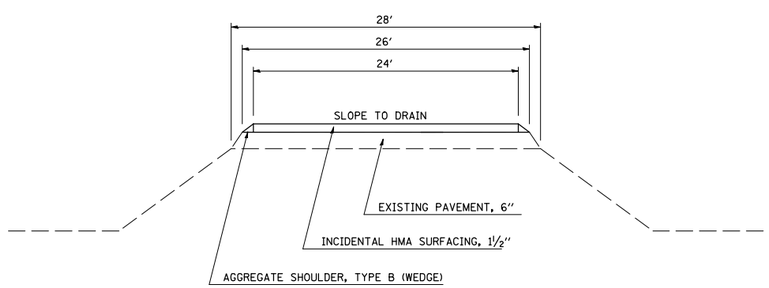

ELEVATION

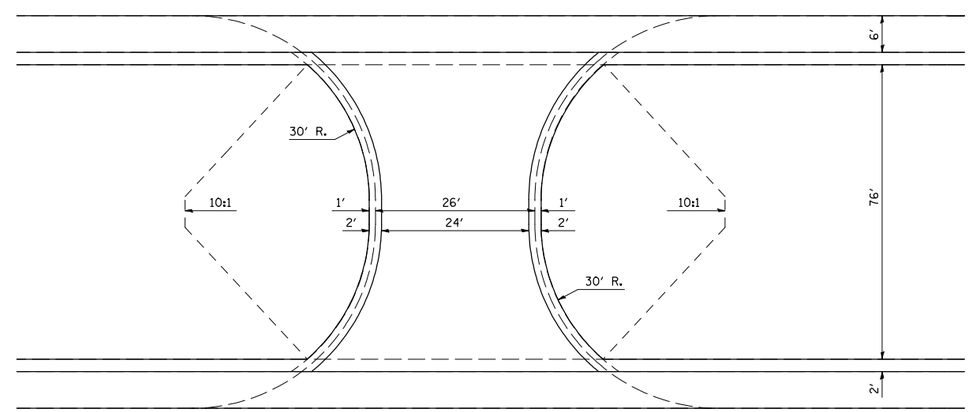

PLAN

FILE NAME = c:\pw_work\pwidot\bowerml\d0110023\70766DETAILS.DGN	USER NAME = bowerml	DESIGNED - JMS	REVISED -	STATE OF ILLINOIS DEPARTMENT OF TRANSPORTATION	DETAILS FOR MILLING TRANSITIONS / MEDIAN CROSSOVER	F.A.I. RTE. 57	SECTION 10-37RS-2&(10,27-38)RS-1	COUNTY CHAMPAIGN	TOTAL SHEETS 41 / SHEET NO. 27
	PLOT SCALE = 40.0000 ' / IN.	DRAWN - JMS	REVISED -					CONTRACT NO. 70766	
	PLOT DATE = 12/2/2009	CHECKED -	REVISED -						
		DATE - 02-20-2009	REVISED -		SCALE: / SHEET NO. 5 OF 5 SHEETS / STA. / TO STA.			ILLINOIS FED. AID PROJECT	

70 MPH (110 km/h) DESIGN - 64′ (19.5 m) MEDIAN

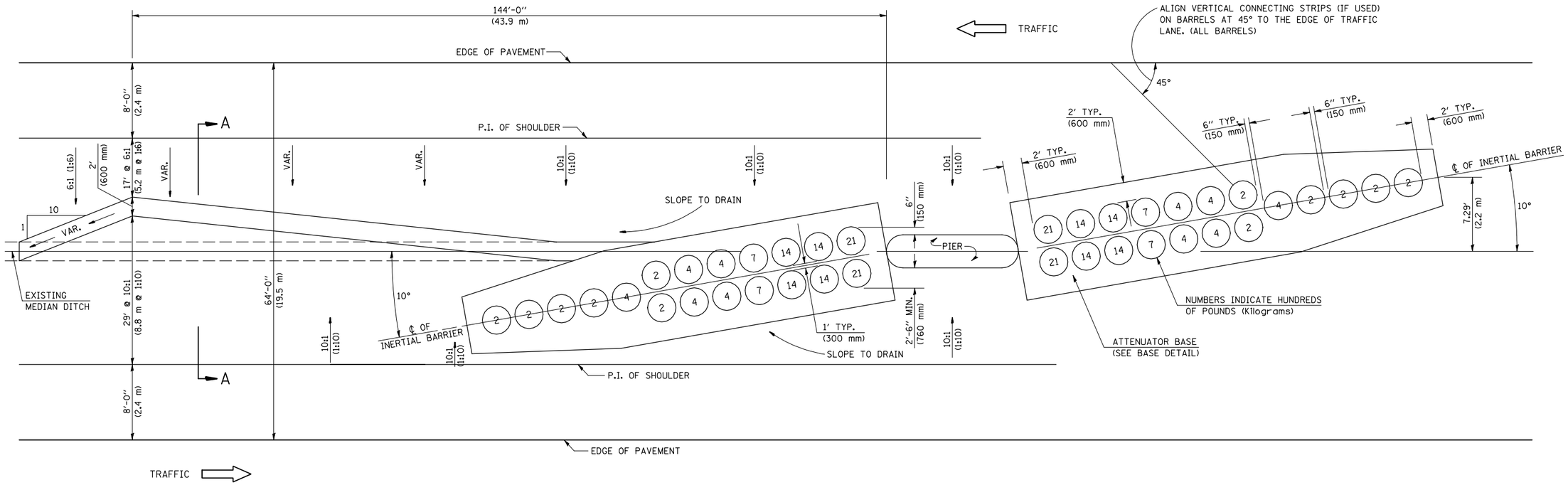

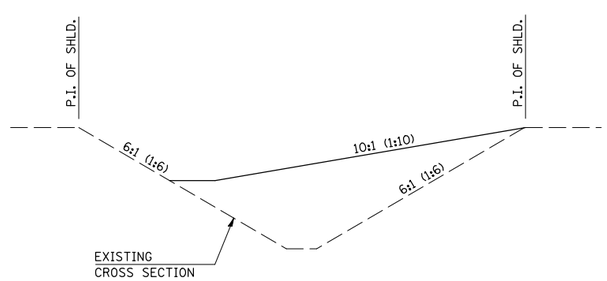

SECTION A-A
GRADING AND SHAPING DETAIL

GENERAL NOTES

1. ALL 10:1 (1:10) SLOPES SHOWN ON THIS DETAIL SHALL BE CONSTRUCTED 10:1 (1:10) OR FLATTER.
2. THE SLOPES AS SHOWN ON THIS DETAIL SHALL APPLY TO BOTH ENDS OF THE BRIDGE PIERS.
3. THE LENGTH X WIDTH OF MODULE LAYOUT IS 41.0′ x 7.0′: 19 MODULES - 14,400 LBS.
   (12.5 m x 2.1 m : 19 MODULES - 6532 kg).
4. IN AREAS OF 10:1 (1:10) SLOPES PRECEDING THE ATTENUATOR IN THE MEDIAN INSTALLATION, FOUR OR MORE WOOD POSTS SHALL BE PLACED AT 5′ (1.5 m) INTERVALS IN THE MEDIAN ℄. SEE SPECIAL PROVISIONS AND SCHEDULES.

SHEET 1 OF 2

Note: All dimensions are in INCHES (millimeters) unless otherwise shown.

FILE NAME =	USER NAME = bowerml	DESIGNED -	REVISED - 11/06	STATE OF ILLINOIS DEPARTMENT OF TRANSPORTATION	IMPACT ATTENUATORS (NON-REDIRECTIVE) TEST LEVEL 3	F.A.I. RTE.	SECTION	COUNTY	TOTAL SHEETS	SHEET NO.
ct\pw_work\pwidot\bowerml\d0110023\70766	DETAILS.DGN	DRAWN -	REVISED - 12/08			57	10-37RS-2&(10,27-38)RS-1	CHAMPAIGN	41	28
	PLOT SCALE = 40.0000 ′ / IN.	CHECKED -	REVISED -					CONTRACT NO. 70766		
	PLOT DATE = 12/2/2009	DATE -	REVISED -		SCALE: SHEET NO. OF SHEETS STA. TO STA.	FED. ROAD DIST. NO.	ILLINOIS	FED. AID PROJECT		

DETAIL OF ATTENUATOR BASE TO BE UPGRADED

STATION 1347+05.17 (S.N. 010-0163)
STATION 1409+47.64 (S.N. 010-0162)
STATION 1472+27.27 (S.N. 010-0161)
STATION 1533+05.54 (S.N. 010-0189)
STATION 1590+62.20 (S.N. 010-0082)

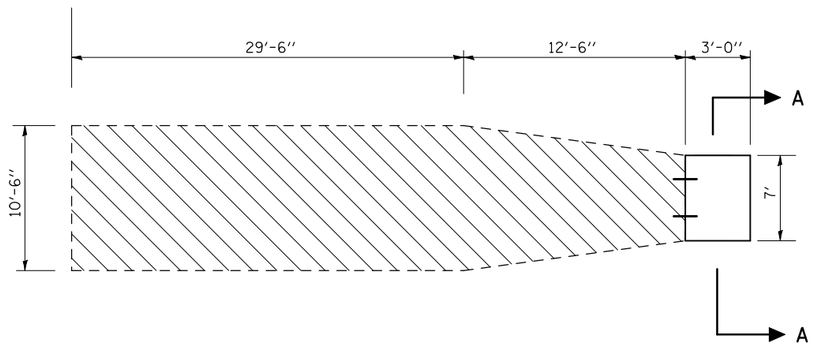

BILL OF MATERIALS (1 BASE)	UNIT	QUANTITY
CLASS SI CONCRETE	CU YD	0.39
NO. 6 TIE BARS	EACH	3.0
GRADING AND SHAPPING DITCHES	FOOT	200.0
TEMPORARY EROSION CONTROL SEED	POUND	5.0
TEMPORARY DITCH CHECK	EACH	1.0
INLET AND PIPE PROTECTION	EACH	1.0

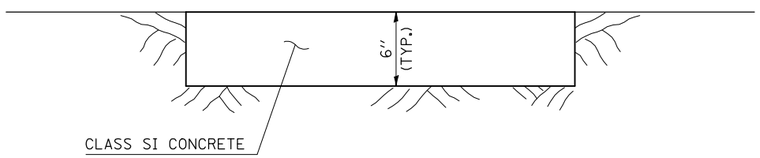

SECTION A-A

EXISTING ATTENUATOR BASE

GENERAL NOTES

1. CLASS SI CONCRETE SHALL BE USED THROUGHOUT.
2. TIE BARS SHALL BE NO. 6 AT 24" CENTERS, UNLESS OTHERWISE SHOWN.
3. ENGINEER SHALL VERIFY EXISTING PAD DIMENSIONS PRIOR TO CONSTRUCTION AND PROVIDE GRADES.
4. EXISTING ATTENUATOR BARRELS SHALL BE REMOVED AND REPLACED TO CONFORM TO DETAIL OF IMPACT ATTENUATORS (NON-REDIRECTIVE) TEST LEVEL 3.
5. THIS WORK SHALL BE PAID FOR AT THE CONTRACT UNIT PRICE PER EACH FOR IMPACT ATTENUATOR (NON-REDIRECTIVE) TEST LEVEL 3. WHICH PRICE SHALL INCLUDE ALL LABOR AND MATERIAL AS SPECIFIED AND NO ADDITIONAL COMPENSATION SHALL BE ALLOWED.

FILE NAME =	USER NAME = bowerml	DESIGNED -	REVISED - 11/06
c:\pw_work\pwidot\bowerml\d0110023\70766DETAILS.DGN		DRAWN -	REVISED - 12/08
	PLOT SCALE = 40.0000 ' / IN.	CHECKED -	REVISED -
	PLOT DATE = 12/2/2009	DATE -	REVISED -

STATE OF ILLINOIS
DEPARTMENT OF TRANSPORTATION

IMPACT ATTENUATORS (NON-REDIRECTIVE) TEST LEVEL 3

SCALE: | SHEET NO. OF SHEETS | STA. TO STA.

F.A.I. RTE.	SECTION	COUNTY	TOTAL SHEETS	SHEET NO.
57	10-37RS-2&(10,27-38)RS-1	CHAMPAIGN	41	29
		CONTRACT NO. 70766		

FED. ROAD DIST. NO. | ILLINOIS | FED. AID PROJECT

GENERAL PLAN
S.N. 010-8311 & 010-8312

THE EXISTING STRUCTURES, 010-8311 & 010-8312 WERE BUILT IN 1967 BY THE STATE OF ILLINOIS AS FAI RTE. 57, SECTION 10-38HB AT STATION 1587+55 IN CHAMPAIGN COUNTY.

THE STRUCTURES WERE IMPROVED WITH A 2" BITUMINOUS WEARING SURFACE AND WATERPROOFING MEMBRANE SYSTEM IN 1977 WITH FAI RTE. 57, SECTION: DISTRICT 5 BRIDGE WATERPROOFING 1977-1. THE STRUCTURES RECEIVED AN ADDITIONAL 1 1/2" OF BITUMINOUS OVERLAY IN 1999 WITH FAI RTE. 57, SECTION: 10-37RS-1 & (10,27-38)RS.

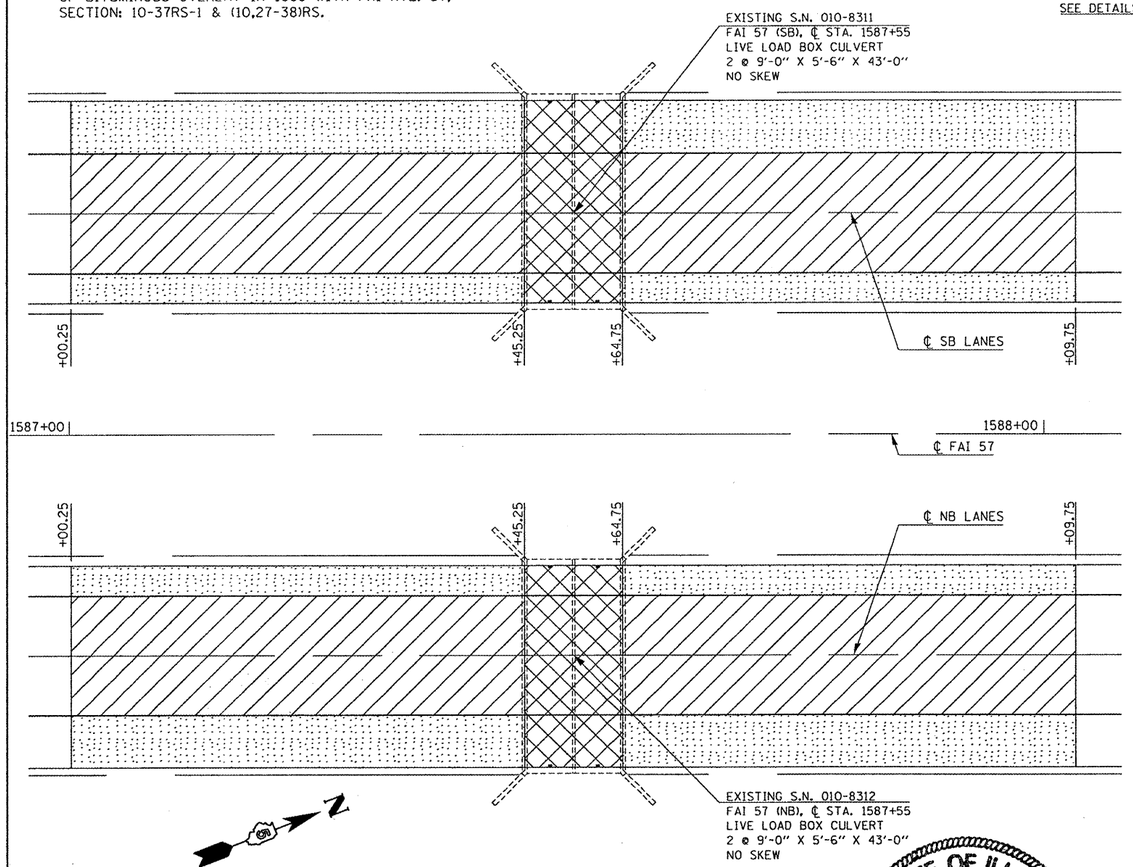

TYPICAL DECK CROSS SECTION
(LOOKING UP-STATION)

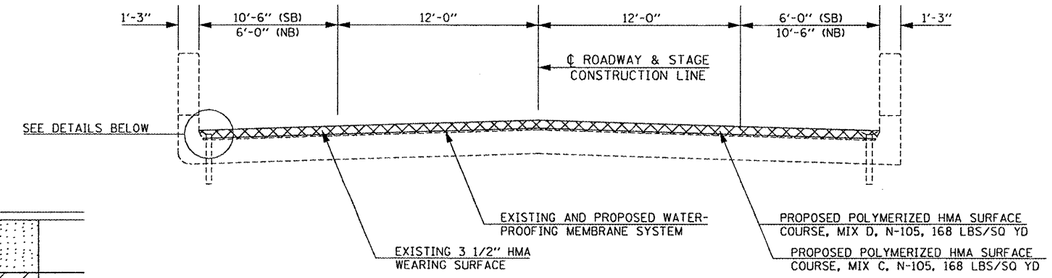

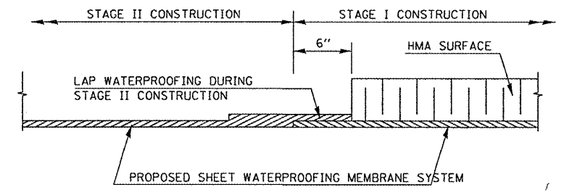

WATERPROOFING TREATMENT AT STAGE CONSTRUCTION

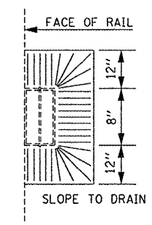

PLAN VIEW AT DRAIN

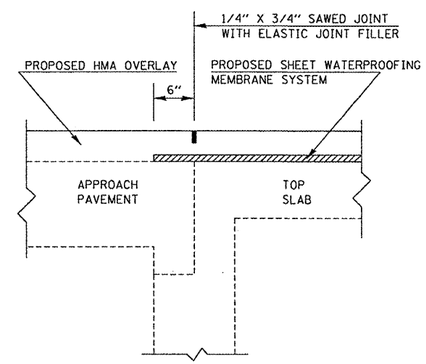

DETAIL OF SAWED JOINT

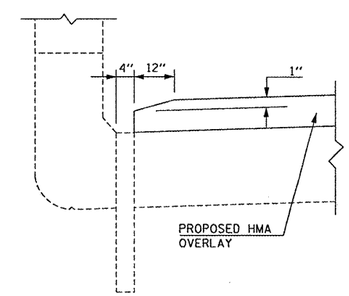

SECTION AT DRAIN

LEGEND

- H.M.A. SURFACE REMOVAL, DECK & PROPOSED 3 1/2" HMA WEARING SURFACE AND SHEET WATERPROOFING MEMBRANE SYSTEM
- MAINLINE COLD MILLING TRANSITION, 2 1/4" - 3 1/2" *
- SHOULDER COLD MILLING TRANSITION, 1/4" - 1 1/2" (TO BE INCLUDED WITH MAINLINE MILLING QTY.) *

SCOPE OF WORK

1. REMOVAL OF THE EXISTING HMA WEARING SURFACE AND WATERPROOFING MEMBRANE SYSTEM.
2. PLACE PROPOSED 3 1/2" HMA WEARING SURFACE AND SHEET WATER-PROOFING MEMBRANE SYSTEM.

* BILL OF MATERIALS INCLUDES STRUCTURE QUANTITIES FROM BACK TO BACK OF STRUCTURE ONLY. SEE ROADWAY PLANS FOR OTHER QUANTITIES.

STATE OF ILLINOIS
RALPH E. ANDERSON
081-004625
SPRINGFIELD
LICENSED STRUCTURAL ENGINEER

EXPIRES 11-30-2010

* BILL OF MATERIALS

ITEM	UNITS	TOTAL
HMA SURFACE REMOVAL, DECK	SQ YD	175.5
SHEET WATERPROOFING MEMBRANE SYSTEM	SQ YD	175.5
POLYMERIZED HMA SURFACE COURSE, MIX C, N-105	TON	15.0
POLYMERIZED HMA SURFACE COURSE, MIX D, N-105	TON	15.0

GENERAL NOTES

PLAN DIMENSIONS AND DETAILS RELATIVE TO EXISTING PLANS ARE SUBJECT TO NOMINAL CONSTRUCTION VARIATIONS. THE CONTRACTOR SHALL FIELD VERIFY EXISTING DIMENSIONS AND DETAILS AFFECTING NEW CONSTRUCTION AND MAKE NECESSARY APPROVED ADJUSTMENTS PRIOR TO CONSTRUCTION OR ORDERING OF MATERIALS. SUCH VARIATIONS SHALL NOT BE CAUSE FOR ADDITIONAL COMPENSATION FOR A CHANGE IN SCOPE OF WORK, HOWEVER, THE CONTRACTOR WILL BE PAID FOR THE QUANTITY ACTUALLY FURNISHED AT THE UNIT PRICE BID FOR THE WORK.

FILE NAME = $FILEL$	USER NAME = $USER$	DESIGNED - GMS	REVISED -
		DRAWN - GMS	REVISED -
	PLOT SCALE = $SCALE$	CHECKED -	REVISED -
	PLOT DATE = $DATE$	DATE -	REVISED -

STATE OF ILLINOIS
DEPARTMENT OF TRANSPORTATION

GENERAL PLAN
STRUCTURES 010-8311 & 010-8312

SCALE: | SHEET NO. OF SHEETS | STA. TO STA.

F.A.I. RTE.	SECTION	COUNTY	TOTAL SHEETS	SHEET NO.
57	10-37RS-2&(10,27-38)RS-1	CHAMPAIGN	41	30
		CONTRACT NO. 70766		
FED. ROAD DIST. NO.	ILLINOIS	FED. AID PROJECT		

junk2.dgn 1/13/2010 9:01:02 AM

DECK SURVEY PERFORMED ON APRIL 16, 2009. IF MORE THAN ONE WINTER FREEZE-THAW CYCLE OCCURS BETWEEN THE INITIAL INSPECTION AND THE COMMENCEMENT OF WORK, THE FINAL PLAN QUANTITIES FOR DECK REPAIRS MUST BE BASED ON A NEW INSPECTION OF THE DECK.

GENERAL PLAN
S.N. 010-0082

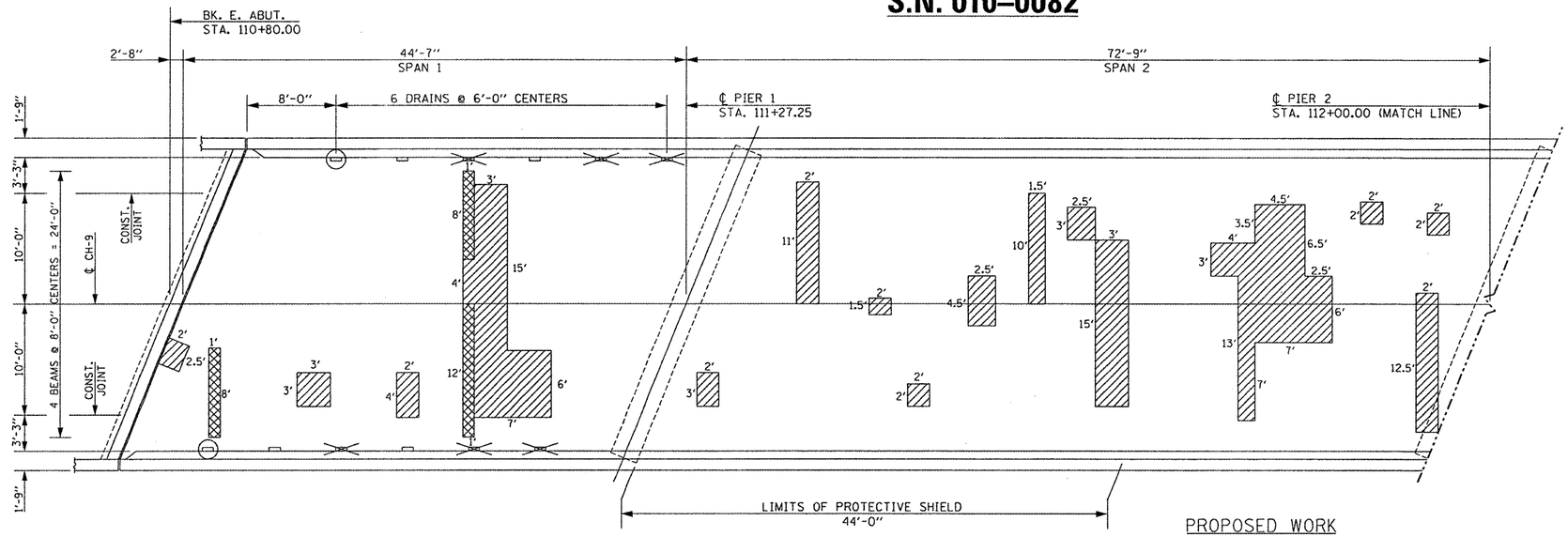

THE EXISTING OVERHEAD STRUCTURE WAS BUILT IN 1969 AS FA ROUTE 57, SECTION 10-38HB AT STATION 1590+62 IN CHAMPAIGN COUNTY.

THE SUPERSTRUCTURE CONSISTS OF A 7" R.C. SLAB AND FOUR 36" WF STEEL I-BEAMS SUPPORTED BY THREE HAMMERHEAD PIERS AND STUB ABUTMENTS. THE STRUCTURE MEASURES 240'-0" FROM BACK TO BACK OF ABUTMENT. THE DECK HAS A CLEAR WIDTH OF 26'-6" AND AN OUT-TO-OUT WIDTH OF 30'-0".

METHOD OF CONSTRUCTION: ROAD CLOSURE (UTILIZING TRAFFIC CONTROL & PROTECTION DEVICES (ROAD & SIDEROAD/STREET CLOSURES))

NO SALVAGE.

SEE PROPOSED IMPROVEMENTS ON THIS SHEET.

TOTAL BILL OF MATERIALS

ITEM	UNIT	TOTAL
DECK SLAB REPAIR (FULL DEPTH, TYPE II)	SQ YD	10.4
DECK SLAB REPAIR (PARTIAL)	SQ YD	68.3
ELASTOMERIC BEARING ASSEMBLY, TYPE I	EACH	8.0
JACK AND REMOVE EXISTING BEARINGS	EACH	8.0
FURNISH AND ERECT STRUCTURAL STEEL	POUND	1410.0
ANCHOR BOLTS, 1" Ø	EACH	16.0
SILICONE JOINT SEALER, 1 1/2"	FOOT	75.3
PLUG EXISTING DECK DRAINS	EACH	12.0
PROTECTIVE SHIELD	SQ YD	250.0

PROPOSED WORK

1. PARTIAL AND FULL DEPTH DECK SLAB REPAIR.
2. INSTALL SILICONE JOINT SEALER AT EXPANSION JOINTS.
3. REMOVE EXISTING STEEL ROCKER BEARINGS AND REPLACE WITH ELASTOMERIC BEARINGS.
4. PLUG EXISTING DECK DRAINS AT SPECIFIED LOCATIONS.

LEGEND

- DECK SLAB REPAIR, FULL-DEPTH
- DECK SLAB REPAIR (PARTIAL)
- PLUG EXISTING DECK DRAINS
- REMOVE EXTENSION FROM PREVIOUSLY PLUGGED DECK DRAIN (COST INCLUDED WITH PLUG EXISTING DECK DRAINS)

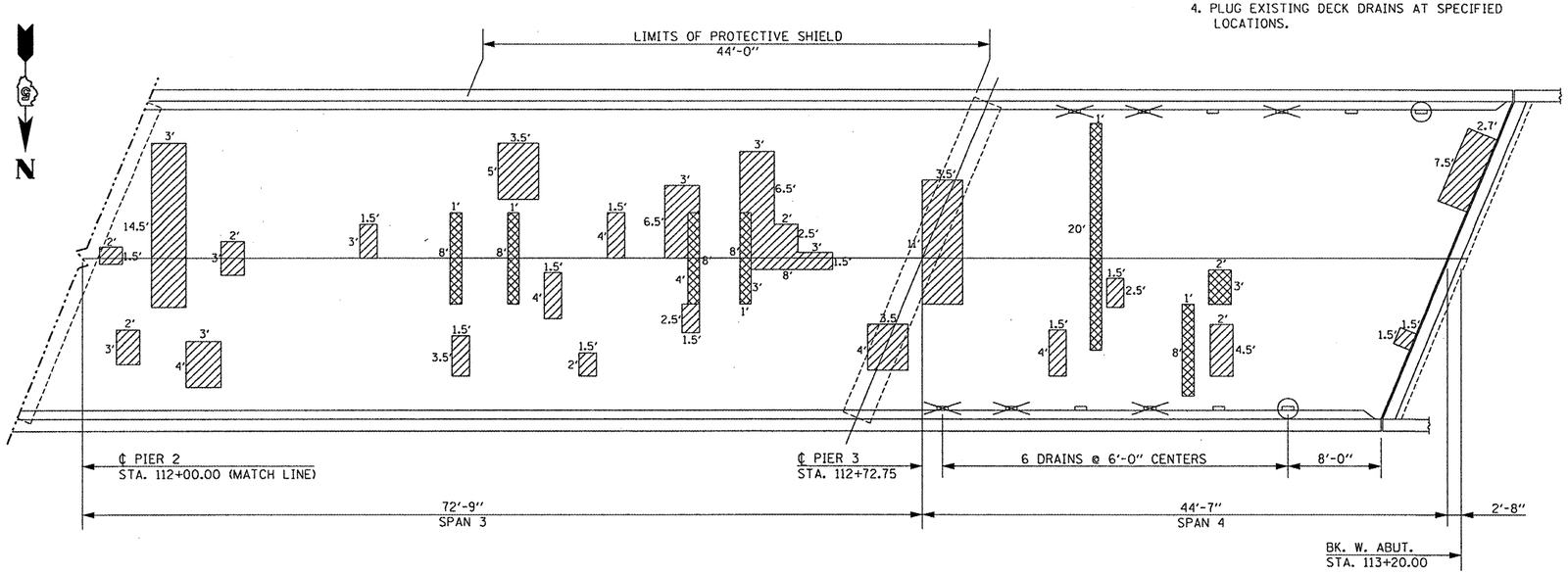

GENERAL NOTES

PLAN DIMENSIONS AND DETAILS RELATIVE TO EXISTING PLANS ARE SUBJECT TO NOMINAL CONSTRUCTION VARIATIONS. THE CONTRACTOR SHALL FIELD VERIFY EXISTING DIMENSIONS AND DETAILS AFFECTING NEW CONSTRUCTION AND MAKE NECESSARY APPROVED ADJUSTMENTS PRIOR TO CONSTRUCTION OR ORDERING OF MATERIALS. SUCH VARIATIONS SHALL NOT BE CAUSE FOR ADDITIONAL COMPENSATION FOR A CHANGE IN SCOPE OF WORK, HOWEVER, THE CONTRACTOR WILL BE PAID FOR THE QUANTITY ACTUALLY FURNISHED AT THE UNIT PRICE BID FOR THE WORK.

STATE OF ILLINOIS
RALPH E. ANDERSON
081-004625
SPRINGFIELD
LICENSED STRUCTURAL ENGINEER

EXPIRES 11-30-2010

FILE NAME = $FILEL$	USER NAME = $USER$	DESIGNED - GMS	REVISED -
		DRAWN - GMS	REVISED -
	PLOT SCALE = $SCALE$	CHECKED -	REVISED -
	PLOT DATE = $DATE$	DATE -	REVISED -

STATE OF ILLINOIS
DEPARTMENT OF TRANSPORTATION

GENERAL PLAN
S.N. 010-0082

SCALE: | SHEET NO. 1 OF 8 SHEETS | STA. | TO STA.

F.A.I. RTE.	SECTION	COUNTY	TOTAL SHEETS	SHEET NO.
57	10-37RS-2&(10,27-38)RS-1	CHAMPAIGN	41	31
		CONTRACT NO. 70766		
		ILLINOIS FED. AID PROJECT		

junk2.dgn 1/12/2010 4:32:58 PM

AS-BUILT PATCHING PLAN
S.N. 010-0082

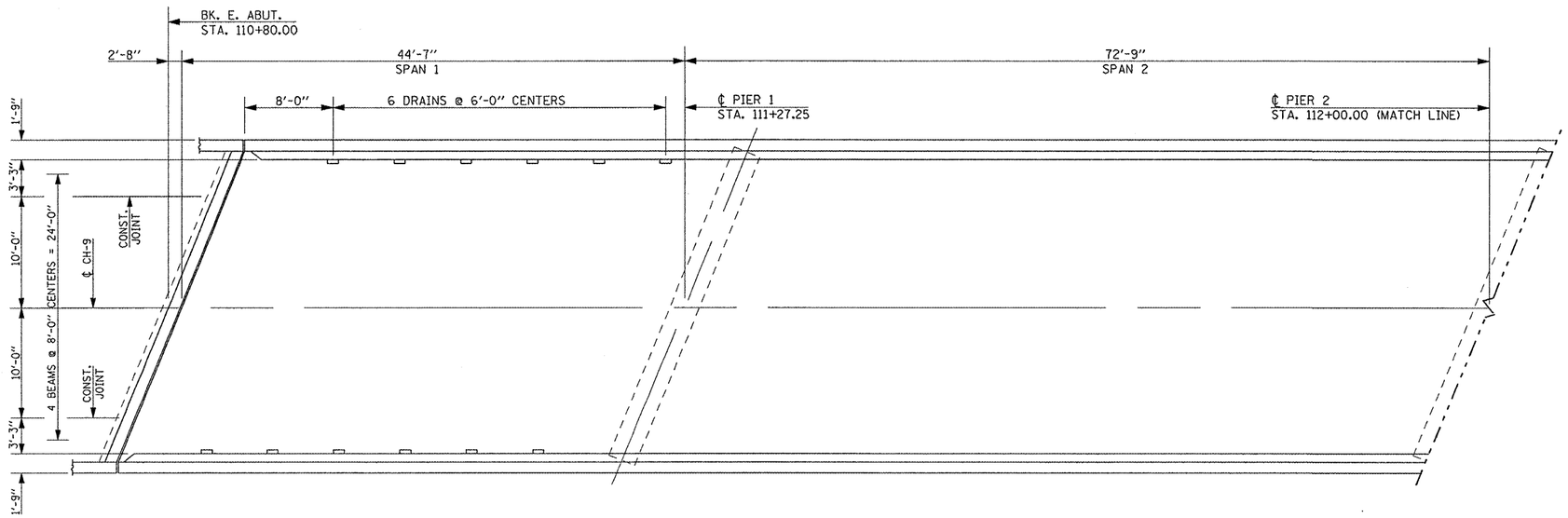

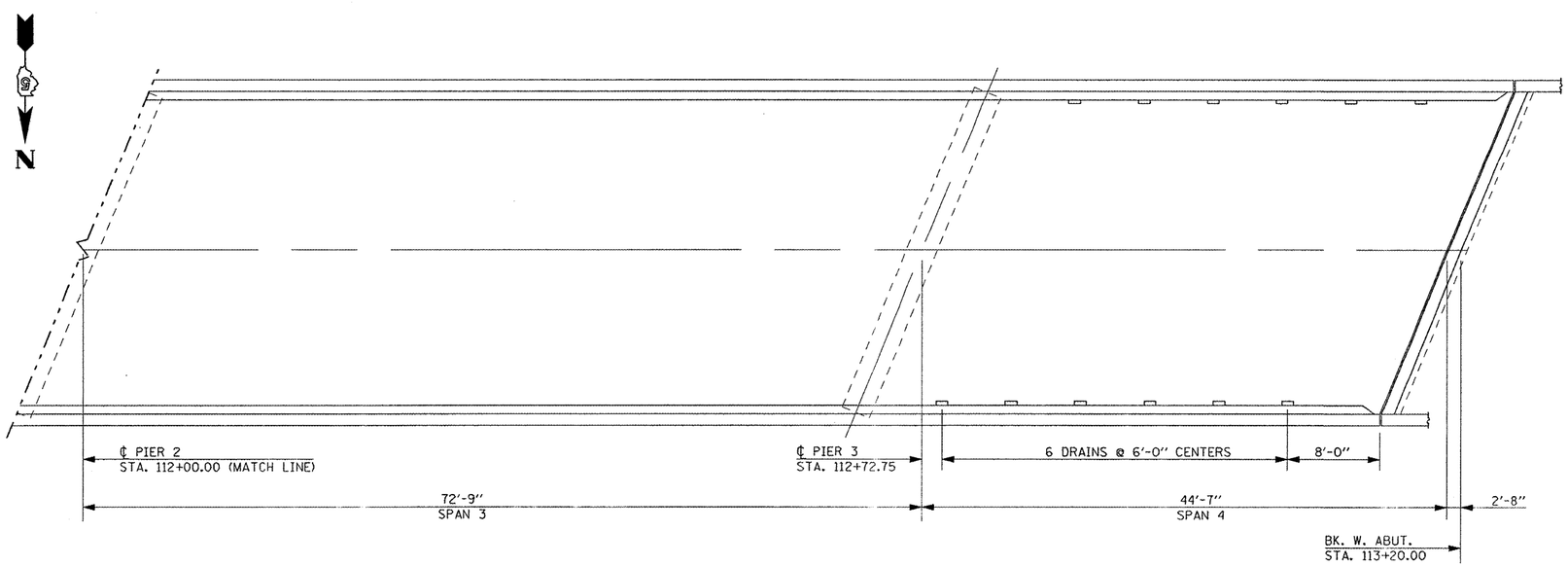

NOTE:
A PATCHING SURVEY WAS CONDUCTED AND THE PATCH SIZES AND LOCATIONS WERE PROVIDED ON THE PREVIOUS SHEET. ACTUAL SIZES AND LOCATIONS FOR THE FULL AND PARTIAL DEPTH PATCHING SHALL BE DETERMINED BY THE ENGINEER AND SHOWN ON THIS SHEET.

FILE NAME = c:\pw_work\pwidot\bowerml\d0110023\70766	USER NAME = bowerml	DESIGNED - GMS	REVISED -	STATE OF ILLINOIS DEPARTMENT OF TRANSPORTATION	AS-BUILT PATCHING PLAN S.N. 010-0082	F.A.I. RTE.	SECTION	COUNTY	TOTAL SHEETS	SHEET NO.
	Bridge Repair Plan.dgn	DRAWN - GMS	REVISED -			57	10-37RS-2&(10,27-38)RS-1	CHAMPAIGN	41	32
	PLOT SCALE = 40.0000 ' / IN.	CHECKED -	REVISED -					CONTRACT NO. 70766		
	PLOT DATE = 12/2/2009	DATE -	REVISED -		SCALE: / SHEET NO. 2 OF 8 SHEETS / STA. / TO STA.			ILLINOIS FED. AID PROJECT		

JOINT & DRAIN REPAIR DETAILS
S.N. 010-0082

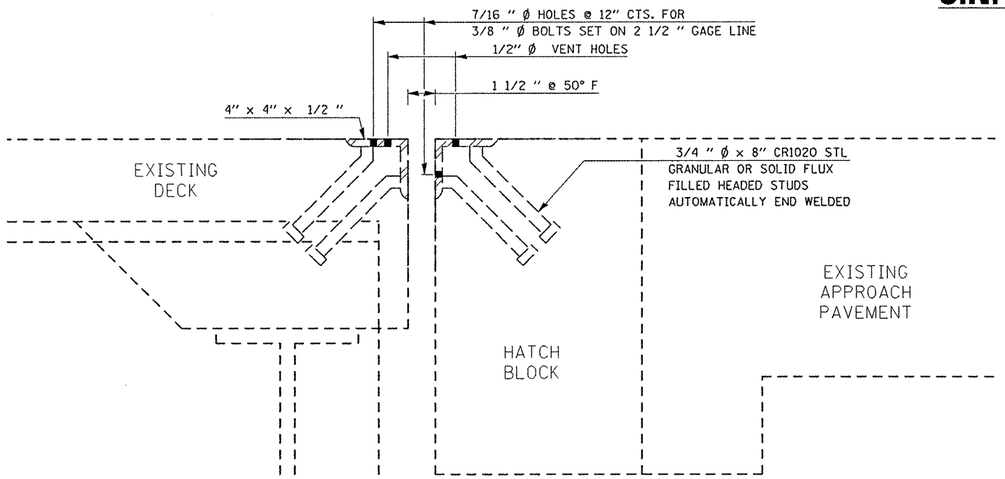

SECTION AT EXISTING JOINT

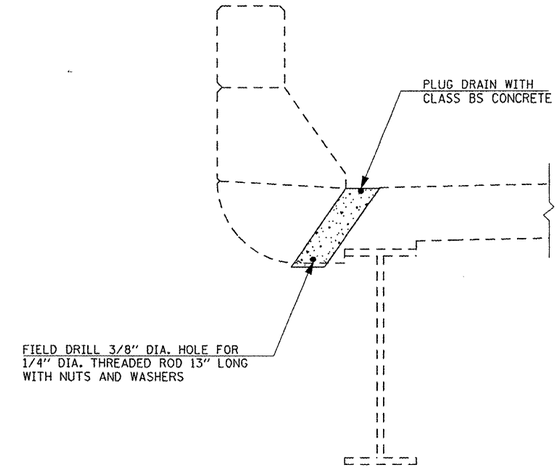

NOTE:
FOR EXISTING DECK DRAINS WITH EXTENSIONS, REMOVE THE BOTTOM PORTION OF EXISTING DRAIN. (COST TO BE INCLUDED WITH PLUG EXISTING DECK DRAINS)

DETAIL FOR PLUG
EXISTING DECK DRAINS

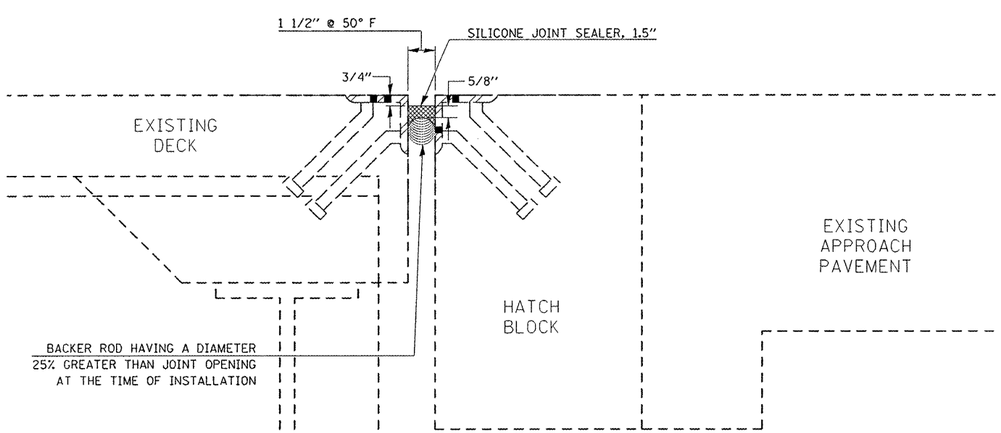

SECTION AT PROPOSED JOINT

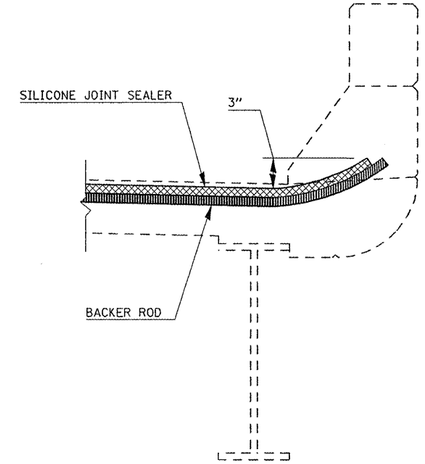

SECTION AT PARAPET

BILL OF MATERIALS

ITEM	UNIT	TOTAL
PLUG EXISTING DECK DRAINS	EACH	12.0
SILICONE JOINT SEALER, 1.5"	FOOT	75.3

FILE NAME = c:\pw_work\pwidot\bowerml\d0110023\70766	USER NAME = bowerml	DESIGNED - GMS	REVISED -
	Bridge Repair Plan.dgn	DRAWN - GMS	REVISED -
	PLOT SCALE = 40.0000 ' / IN.	CHECKED -	REVISED -
	PLOT DATE = 12/2/2009	DATE -	REVISED -

STATE OF ILLINOIS
DEPARTMENT OF TRANSPORTATION

JOINT & DRAIN REPAIR DETAILS
S.N. 010-0082

SCALE: | SHEET NO. 3 OF 8 SHEETS | STA. | TO STA.

F.A.I. RTE.	SECTION	COUNTY	TOTAL SHEETS	SHEET NO.
57	10-37RS-2&(10,27-38)RS-1	CHAMPAIGN	41	33

CONTRACT NO. 70766
ILLINOIS FED. AID PROJECT

STATE OF ILLINOIS
DEPARTMENT OF TRANSPORTATION

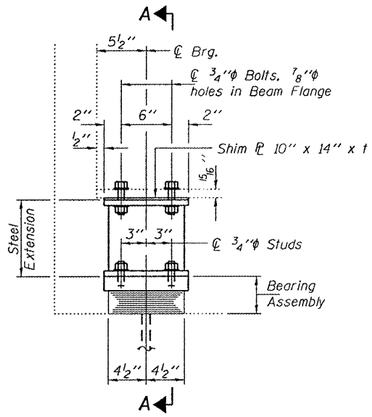

ELEVATION AT ABUTMENT

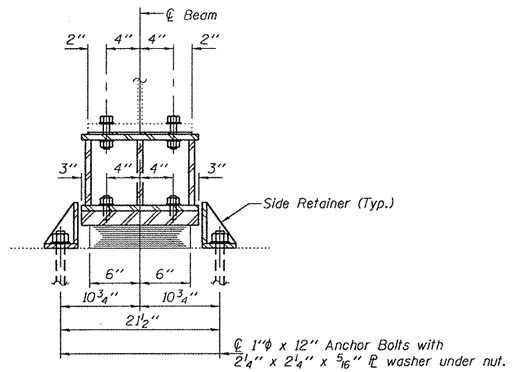

SECTION A-A

TYPE I ELASTOMERIC EXP. BRG.

Notes:

Diaphragm removal and reinstallation may be required to facilitate drilling holes. Cost included with Furnishing and Erecting Structural Steel.

New steel extensions, shim plates and connection bolts are included with Furnishing and Erecting Structural Steel.

Prior to ordering any material, the Contractor shall verify in the field all bearing height and shim thickness dimensions.

Min. jack capacity = 35 Tons.

Anchor bolts shall be ASTM F1554 all-thread (or an Engineer-approved alternate material) of the grade(s) and diameter(s) specified. ASTM A307 Grade C anchor bolts may be used in lieu of ASTM F1554 Grade 36 (Fy=36ksi). The corresponding specified grade of AASHTO M314 anchor bolts may be used in lieu of ASTM F1554.

Drilled and set anchor bolts shall be installed according to Article 521.06 of the Standard Specifications.

Side retainers shall be included in the cost of Elastomeric Bearing Assembly, Type I.

All structural steel shall conform to AASHTO Classification M-270 Gr. 36, unless otherwise noted.

Fasteners shall be high strength bolts.

The existing structural steel coating contains lead. The Contractor shall take appropriate precautions to deal with the presence of lead on this project.

Existing structural steel that will be in contact with new structural steel shall be cleaned and painted prior to erection as required by the Special Provision "Cleaning and Painting Contact Surface Areas of Existing Steel Structures".

All structural steel shall be shop painted with the inorganic zinc rich primer per AASHTO M300, Type 1. Cost included with Furnishing and Erecting Structural Steel.

If the analysis submitted to the Contractor for the jacking/temporary support system to be used shows temporary stiffeners are required to prevent web crippling or buckling, the stiffeners shall be steel and bolted to the web. If stiffeners are not required, hardwood timbers shall be installed tightly between the top and bottom flange to prevent flange rotation.

BEAM REACTIONS

RP	(K)	16.2
RL	(K)	39.5
Imp.	(K)	11.8
R (Total)	(K)	67.5

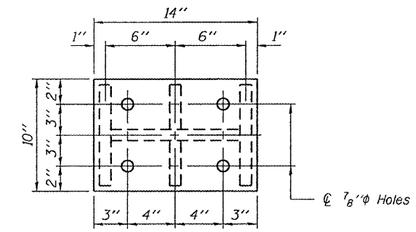

PLAN TOP AND BOTTOM PLATE

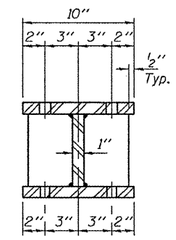

SECTION B-B

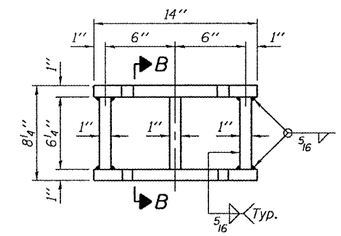

STEEL EXTENSION DETAIL

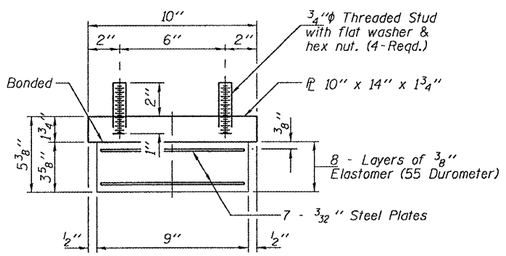

BEARING ASSEMBLY

Note:
Shim plates shall not be placed under Bearing Assembly.

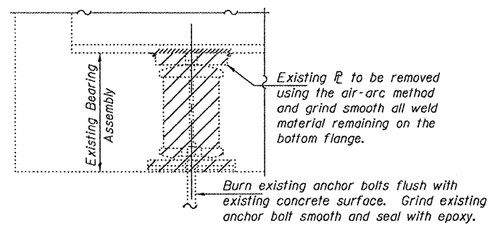

EXISTING BEARING REMOVAL DETAIL

Cost included with Jack and Remove Existing Bearings.

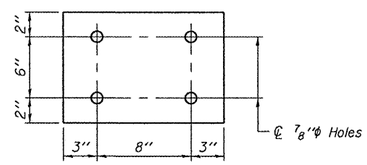

SHIM PLATE

ℙ 10" x 14" x t
(4 Required)

SHIM PLATE THICKNESS t

	Bm. 1	Bm. 2	Bm. 3	Bm. 4
E. Abut.	1"	⅜"	—	—
W. Abut.	—	—	⅜"	1"

BILL OF MATERIAL

Item	Unit	Total
Elastomeric Bearing Assembly, Type I	Each	8
Jack and Remove Existing Bearings	Each	8
Furnishing and Erecting Structural Steel	Pound	1410
Anchor Bolts 1"φ	Each	16

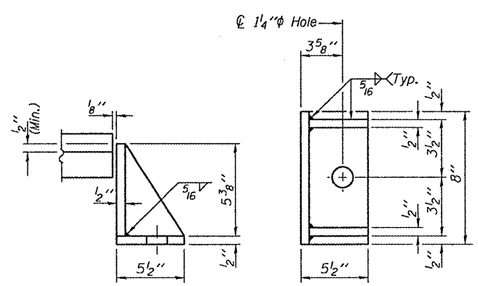

SIDE RETAINER

Equivalent rolled angle with stiffeners will be allowed in lieu of welded plates.

REPAIR DETAILS
CH 9 OVER I-57
SN 010-0082

SHEET NO. 1	F.A.I. RTE.	SECTION	COUNTY	TOTAL SHEETS	SHEET NO.
	57	10-37RS-2&(10,27-38)RS-1	CHAMPAIGN	41	34
1 SHEETS			CONTRACT NO. 70766		
	FED. ROAD DIST. NO.	ILLINOIS	FED. AID PROJECT		

DESIGNED
CHECKED
DRAWN baliva
CHECKED

JANUARY 12, 2010
EXAMINED ENGINEER OF STRUCTURAL SERVICES
PASSED ENGINEER OF BRIDGES AND STRUCTURES

STATE OF ILLINOIS
RALPH E. ANDERSON
081-004625
SPRINGFIELD
LICENSED STRUCTURAL ENGINEER

EXPIRES 11-30-2010

TYI/REPS 12-03-2008

0100082.dgn 1/12/2010 10:03:13 AM

AS–BUILT PLANS
FOR INFORMATION ONLY

STATE OF ILLINOIS
DEPARTMENT OF PUBLIC WORKS & BUILDINGS
DIVISION OF HIGHWAYS

ROUTE NO.	SECTION	COUNTY	TOTAL SHEETS	SHEET NO.
F.A.I. RTE. 57	10-38HB	Champaign	69	14

SHEET NO. 1 / 10 SHEETS

B.M. Top C.L. Mon. 94' Lt. Sta. 1590+56 Elev. 710.09

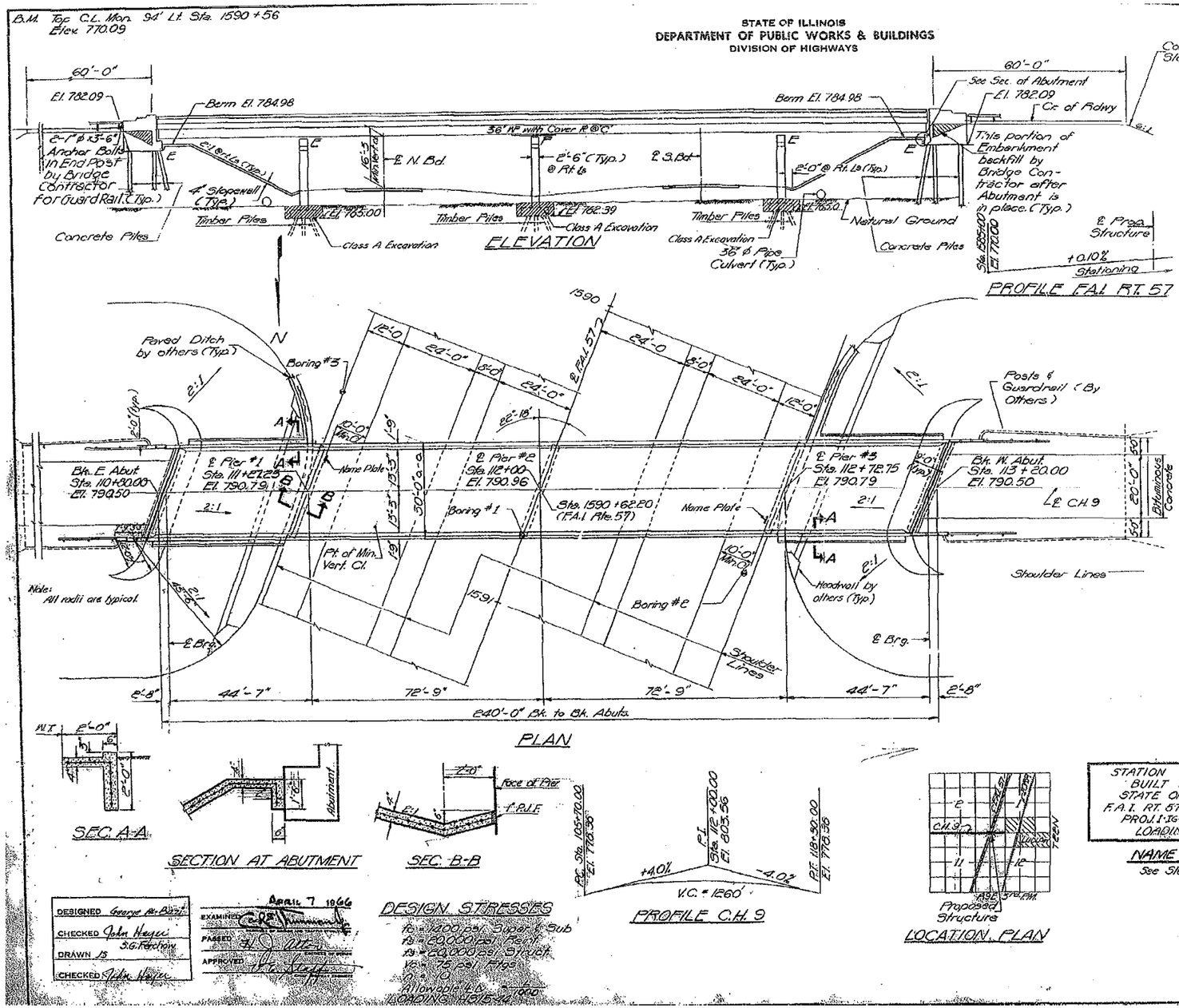

GENERAL NOTES

Coarse aggregate to be used in parapet handrails and end post must be free of chert, flint, limonite, lignite and soft sandstone.

The concrete floor slab shall be finished in accordance with Art 5119 of the Standard Specifications.

Slope Wall shall be reinforced with welded wire fabric 6"x6" mesh, weighing 58# per 100 Sq. Ft.

All reinforcement bars shall be lapped 20 diameters unless otherwise shown.

All structural steel shall conform to A.S.T.M. Designation A-36.

Rivets ¾"ø, Open Holes 13/16"ø, unless otherwise noted.

Anchor bolts shall be set before fastening diaphragms over supports.

Exposed surfaces of the expansion devices, inaccessible after erection, shall receive two shop coats of red lead paint. All other surfaces shall be given one shop coat of red lead paint. Anchor studs shall not be painted.

Expansion devices are included in the quantity of structural steel. Est. weight = 1590 Lbs.

Except as otherwise provided, all structural steel shall receive one shop coat of red lead paint and two field coats of paint. See Special Provisions for field paint.

PAVEMENT TIES WILL NOT BE PERMITTED IN PORTLAND CEMENT CONC.

Concrete piles at abutments shall be driven in holes precored thru the embankment in accordance with Article 60.9 (c) of the Standard Specifications.

The contractor shall drive one concrete test pile at the West Abutment, in a permanent location, and one timber test pile in the vicinity of Pier 2 as directed by the Engineer before ordering the remainder of piles.

TOTAL BILL OF MATERIAL

ITEM	UNIT	SUPER.	SUB.	TOTAL
Class A Excavation for structures	Cu. Yds.		120	120
Class X Concrete	Cu. Yds.	208.7	211.2	419.9
*Protective Coat	Sq. Yds.	920		920
Structural Steel	Lbs.	176200		176200
Aluminum Handrail	Lin. Ft.	473		473
Reinforcement Bars	Lbs.	35430	18140	53570
Creosoted Piles (up to 20')	Lin. Ft.		1092	1092
Test Piles (Timber)	Each		1	1
Concrete Piles	Lin. Ft.		612	612
Test Piles (Concrete)	Each		1	1
Name Plates	Each		2	2
Slope Wall (4")	Sq. Yds.			380
** Bridge Seal Sealant	Lump Sum			1

*Includes applications on inside vertical face, top & exposed end of the abutment wings.

Excavation for portions of structures in the embankments shall not be classified.

**At the Abut. only.

PAYMENT FOR ALL OF THE COMPONENTS THAT ARE NECESSARY TO THE INSTALLATION OF THE BRIDGE SEAL SHALL BE MADE AT THE CONTRACT UNIT PRICE PER LINEAR FOOT FOR THE BRIDGE SEAL SEALANT. THE PRICE PER LINEAR FOOT SHALL INCLUDE ALL LABOR, MATERIALS, EQUIPMENT, TOOLS, AND INCIDENTALS NECESSARY TO COMPLETE THE WORK.

STATION 1590+62.20
BUILT 196 BY
STATE OF ILLINOIS
F.A.I. RT. 57 SEC. 10-38 HB
PROJ. IG-57-5(64)
LOADING HS 15

NAME PLATE
See Std. 2113-1

DESIGNED George A. Bauer
CHECKED John Hayes S.G. Fechtig
DRAWN JS
CHECKED John Hayes
EXAMINED April 7 1966
PASSED
APPROVED

DESIGN STRESSES
fc = 1200 psi Super-1 Sub
fs = 20,000 psi Rs-1
fy = 33,000 psi Sy-1 Ult.
n = 15 psi Fvg
Allowable f.b. = 1000
LOADING HS15

GENERAL PLAN & ELEVATION
C.H. 9 OVER F.A.I. 57
PROJ. IG-57-5(64)250
F.A.I. RTE. 57 SECT. 10-38 HB
CHAMPAIGN COUNTY
STA. 1590+62.20

FILE NAME = c:\pw_work\pwidot\bowerml\d0110023\70766	USER NAME = bowerml	DESIGNED - GMS	REVISED -
	Bridge Repair Plan.dgn	DRAWN - GMS	REVISED -
	PLOT SCALE = 40.0000 ' / IN.	CHECKED -	REVISED -
	PLOT DATE = 12/2/2009	DATE -	REVISED -

STATE OF ILLINOIS
DEPARTMENT OF TRANSPORTATION

AS–BUILT PLANS – SN 010–0082
FOR INFORMATION ONLY

SCALE: | SHEET NO. 5 OF 8 SHEETS | STA. | TO STA.

F.A.I. RTE.	SECTION	COUNTY	TOTAL SHEETS	SHEET NO.
57	10-37RS-2&(10,27-38)RS-1	CHAMPAIGN	41	35

CONTRACT NO. 70766

ILLINOIS FED. AID PROJECT

AS–BUILT PLANS
FOR INFORMATION ONLY

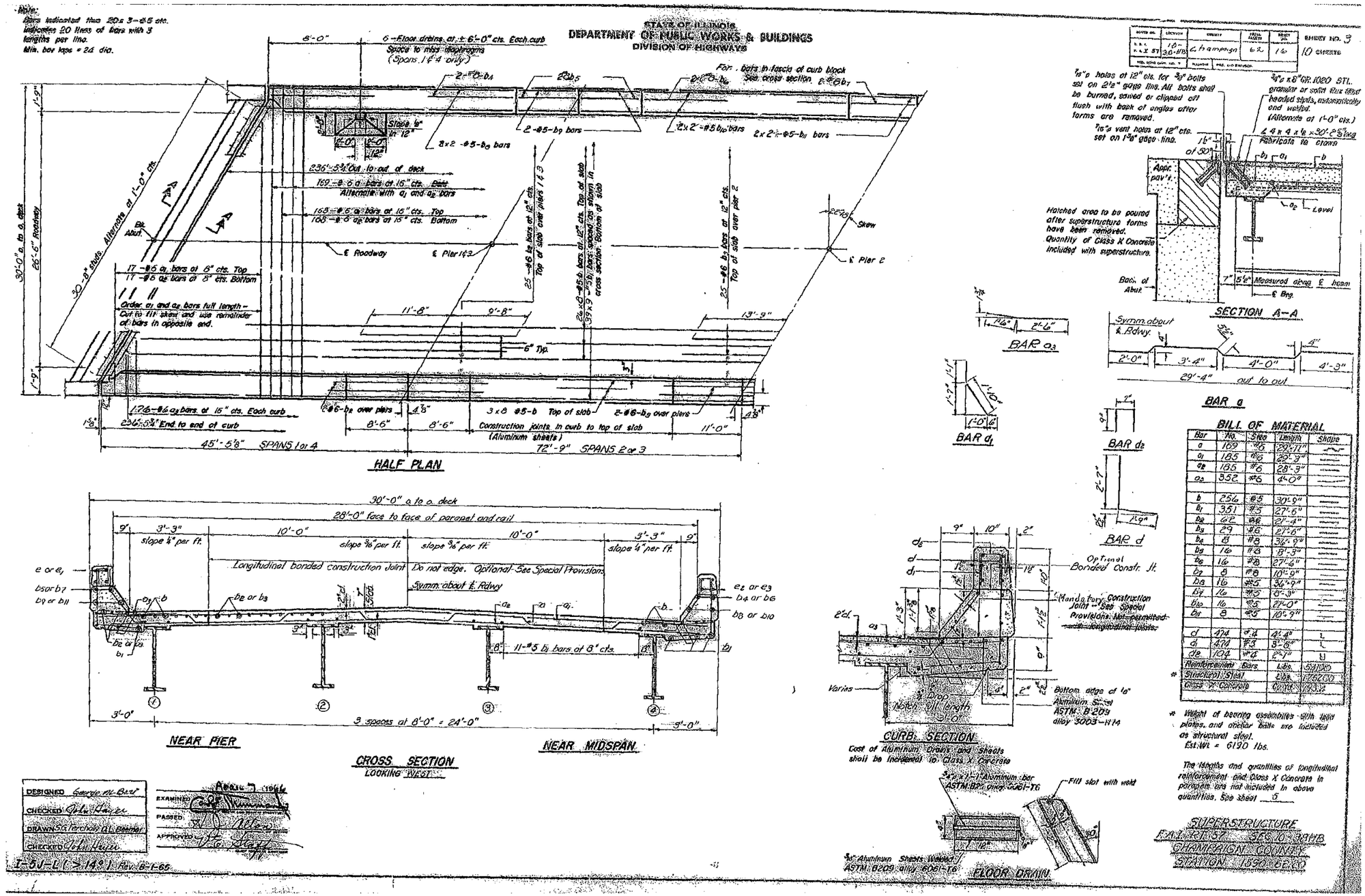

FILE NAME =	USER NAME = bowerml	DESIGNED - GMS	REVISED -
ct\pw_work\pwidot\bowerml\d0110023\70766	Bridge Repair Plan.dgn	DRAWN - GMS	REVISED -
	PLOT SCALE = 40.0000 ' / IN.	CHECKED -	REVISED -
	PLOT DATE = 12/2/2009	DATE -	REVISED -

STATE OF ILLINOIS
DEPARTMENT OF TRANSPORTATION

AS–BUILT PLANS – SN 010–0082
FOR INFORMATION ONLY

SCALE: | SHEET NO. 6 OF 8 SHEETS | STA. | TO STA.

F.A.I. RTE.	SECTION	COUNTY	TOTAL SHEETS	SHEET NO.
57	10-37RS-2&(10,27-38)RS-1	CHAMPAIGN	41	36
		CONTRACT NO. 70766		
		ILLINOIS FED. AID PROJECT		

AS–BUILT PLANS
FOR INFORMATION ONLY

STATE OF ILLINOIS
DEPARTMENT OF PUBLIC WORKS & BUILDINGS
DIVISION OF HIGHWAYS

ROUTE NO.	SECTION	COUNTY	TOTAL SHEETS	SHEET NO.
F.A.I. 57	10-37RS-2(10,27-38)HB	Champaign	62	17

SHEET NO. 4
10 SHEETS

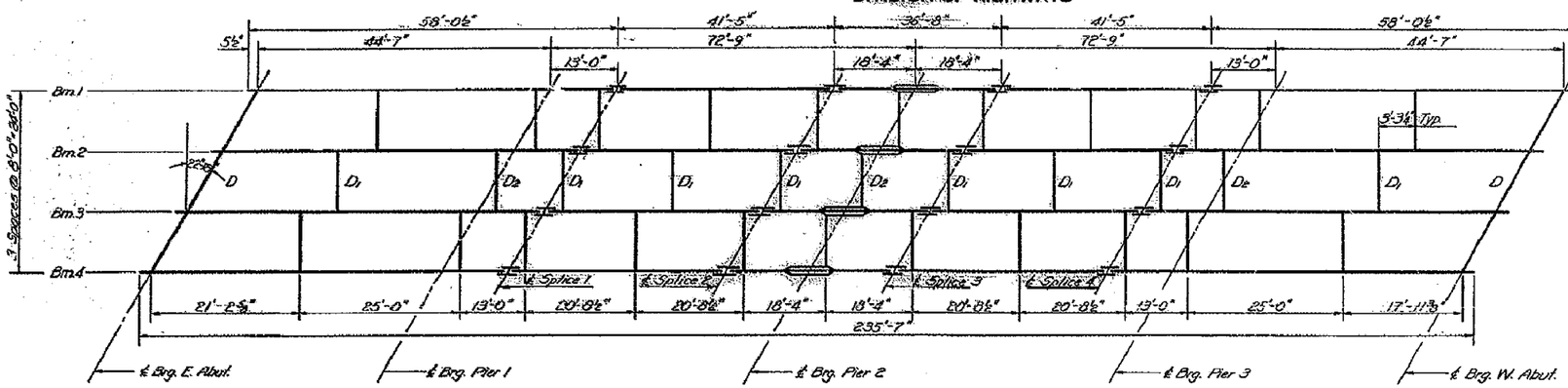

STEEL FRAMING PLAN
(All beams 36" WF 150)

Moments & Reactions (Int. Beams.)

	Moments (K-ft)				Reactions (Kips)		
	℄ Span 2	P-1 & 3	Span 3	P-2	P-1 & 3	P-2	
D.L.	126.4	428.7	268.3	661.8	78.6	78.7	96.2
L.L.	214.0	257.4	369.0	391.8	39.0	98.2	40.7
Imp.	72.0	26.2	83.2	85.5	8.9	17.0	10.5
Total	412.4	713.4	670.5	1090.1	57.1	126.9	153.2

Shim Plates (t in inches)

Location / Bm.	Bm. 1	Bm. 2	Bm. 3	Bm. 4
℄ Brg. E. Abut.	1"	⅜"	0"	0"
℄ Brg. P-1	½"	⅛"	0"	0"
℄ Brg. P-3	0"	0"	⅛"	⅝"
℄ Brg. W. Abut.	0"	0"	⅜"	1"

Note:
Run all Diaphragms level.

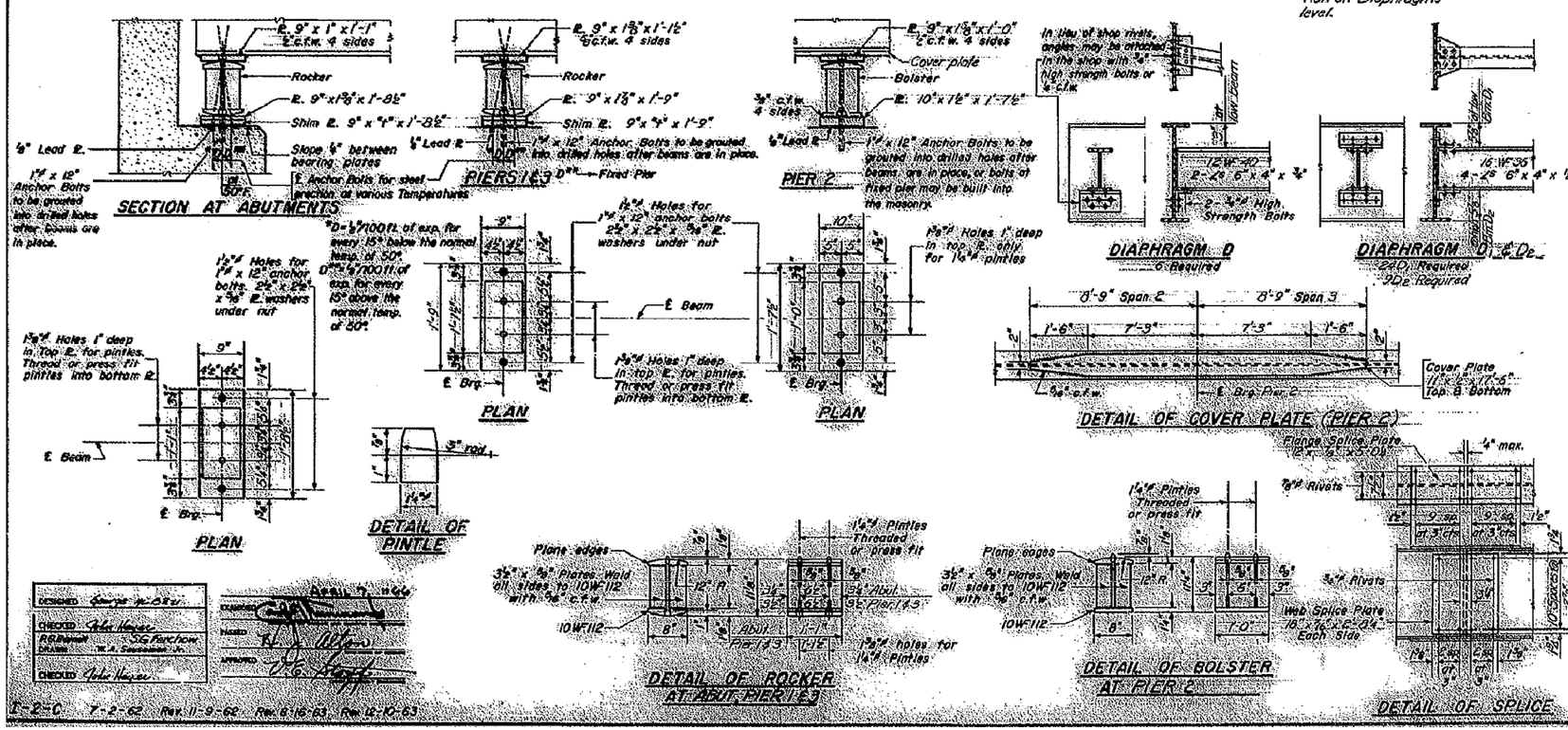

ELEVATION TOP OF WF

Location / Bm.	Bm. 1	Bm. 2	Bm. 3	Bm. 4
℄ Brg. E. Abut.	789.80	789.91	789.88	789.72
℄ Pier 1	789.99	790.11	790.10	789.93
℄ Splice 1	790.05	790.17	790.16	790.01
℄ Splice 2	790.14	790.27	790.27	790.19
℄ Pier 2	790.15	790.27	790.27	790.19
℄ Splice 3	790.19	790.27	790.27	790.19
℄ Splice 4	790.01	790.12	790.12	790.03
℄ Pier 3	789.93	790.10	790.11	789.98
℄ Brg. W. Abut.	789.72	789.88	789.91	789.80

STRUCTURAL STEEL
F.A.I. RT. 57 STG. 10-38HB
CHAMPAIGN COUNTY
STATION 1590+62.20

DESIGNED George W. Ostrander
CHECKED John Hayes
R.E. Engineer S.G. Fortkiewicz
DRAWN W. A. Swanson Jr.
CHECKED John Hayes
CONCURRED
MADE
APPROVED
APRIL 7, 1966

I-2-C 7-2-62 Rev. 11-9-62 Rev. 6-16-63 Rev. 12-12-63

FILE NAME =	USER NAME = bowerml	DESIGNED - GMS	REVISED -
ct\pw_work\pwidot\bowerml\d0110023\70766	Bridge Repair Plan.dgn	DRAWN - GMS	REVISED -
	PLOT SCALE = 40.0000 ' / IN.	CHECKED -	REVISED -
	PLOT DATE = 12/2/2009	DATE -	REVISED -

STATE OF ILLINOIS
DEPARTMENT OF TRANSPORTATION

AS–BUILT PLANS – SN 010–0082
FOR INFORMATION ONLY

SCALE: SHEET NO. 7 OF 8 SHEETS STA. TO STA.

F.A.I. RTE.	SECTION	COUNTY	TOTAL SHEETS	SHEET NO.
57	10-37RS-2&(10,27-38)RS-1	CHAMPAIGN	41	37
		CONTRACT NO. 70766		
		ILLINOIS FED. AID PROJECT		

AS–BUILT PLANS
FOR INFORMATION ONLY

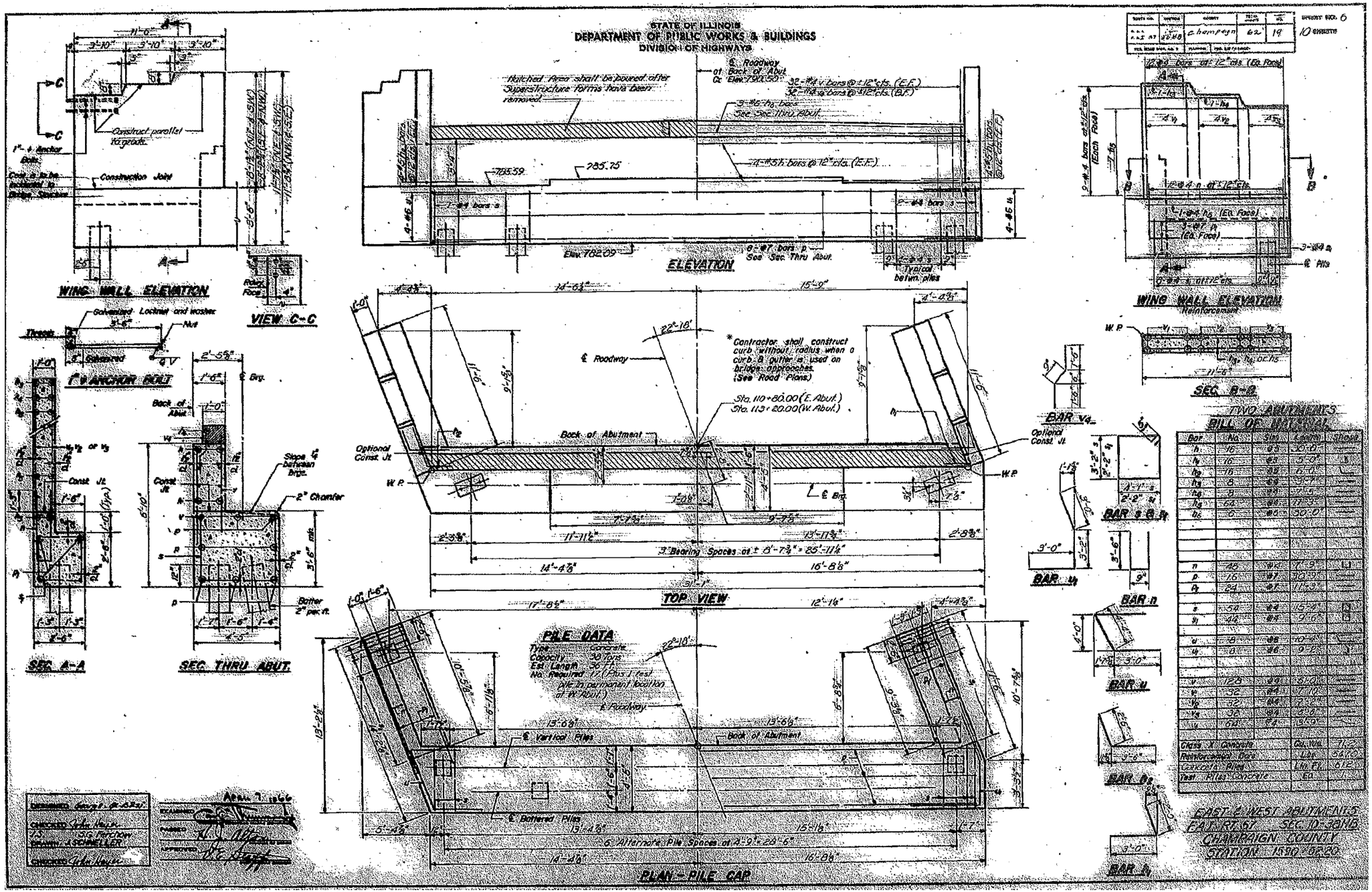

FILE NAME =	USER NAME = bowerml	DESIGNED - GMS	REVISED -
c:\pw_work\pwidot\bowerml\d0110023\70766	Bridge Repair Plan.dgn	DRAWN - GMS	REVISED -
	PLOT SCALE = 40.0000 ' / IN.	CHECKED -	REVISED -
	PLOT DATE = 12/2/2009	DATE -	REVISED -

STATE OF ILLINOIS
DEPARTMENT OF TRANSPORTATION

AS–BUILT PLANS – SN 010–0082
FOR INFORMATION ONLY

SCALE: | SHEET NO. 8 OF 8 SHEETS | STA. | TO STA.

F.A.I. RTE.	SECTION	COUNTY	TOTAL SHEETS	SHEET NO.
57	10-37RS-2&(10,27-38)RS-1	CHAMPAIGN	41	38
		CONTRACT NO. 70766		
		ILLINOIS FED. AID PROJECT		

APPLICATION NO. 1
DAY OPERATION ONLY
PARTIAL RAMP CLOSURE

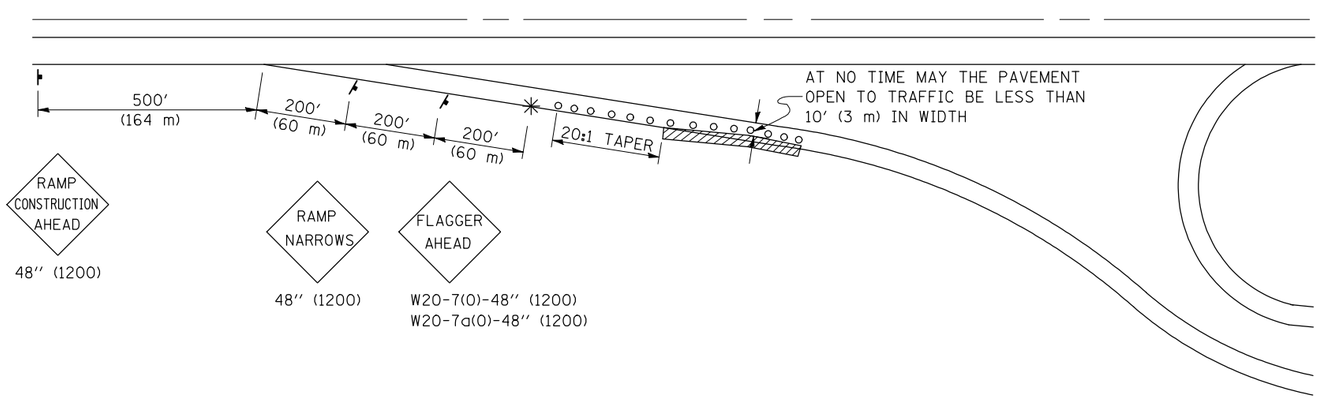

SYMBOLS

- ○ (APPLICATION NO. 1) TYPE I OR II BARRICADES OR DRUMS @ 50′ (15 m) CTS.
- (APPLICATION NO. 2) TYPE I OR II BARRICADES OR DRUMS @ 25′ (7.5 m) CTS. W/STEADY BURNING LIGHTS
- ✳ (APPLICATION NO. 1) FLAGGER PLACED AS DIRECTED BY THE ENGINEER
- SIGN ON PORTABLE OR PERMANENT SUPPORT
- WORK AREA

TYPICAL APPLICATIONS

PAVEMENT PATCHING
PIPE UNDERDRAINS
HMA RESURFACING

GENERAL NOTES

CONSTRUCTION OPERATIONS SHALL BE CONFINED TO AN AREA NARROW ENOUGH THAT A MINIMUM OF 10′ (3 m) OF PAVEMENT SHALL BE OPEN TO TRAFFIC AT ALL TIMES.

FULL WIDTH PAVEMENT ON THE RAMPS SHALL BE OPEN TO TRAFFIC AT NIGHT.

WHEN NO WORK IS BEING PERFORMED, THE FLAGGER WILL NOT BE REQUIRED. IF THE FLAGGER IS NOT PRESENT, THE FLAGGER SIGNS SHALL BE REMOVED OR COVERED.

ALL SIGNS SHALL BE POST MOUNTED IF WORK IN THE AREA EXCEEDS FOUR DAYS OF DAYTIME OPERATIONS.

LONGITUDINAL DIMENSIONS MAY BE ADJUSTED SLIGHTLY TO FIT FIELD CONDITIONS.

ALL VEHICLES, EQUIPMENT, WORKERS (EXCEPT FLAGGER) AND THEIR ACTIVITIES ARE RESTRICTED AT ALL TIMES TO ONE SIDE OF THE PAVEMENT UNLESS OTHERWISE AUTHORIZED BY THE DISTRICT ENGINEER.

Traffic Control for all ramps shall be in accordance with the appropriate application of plan detail TRAFFIC CONTROL FOR RAMPS and will not be paid for separately, but shall be included in the contract lump sum prices for Traffic Control and Protection, Standard 701401 and Traffic Control and Protection, Standard 701406.

APPLICATION NO. 2
RAMP CLOSURE

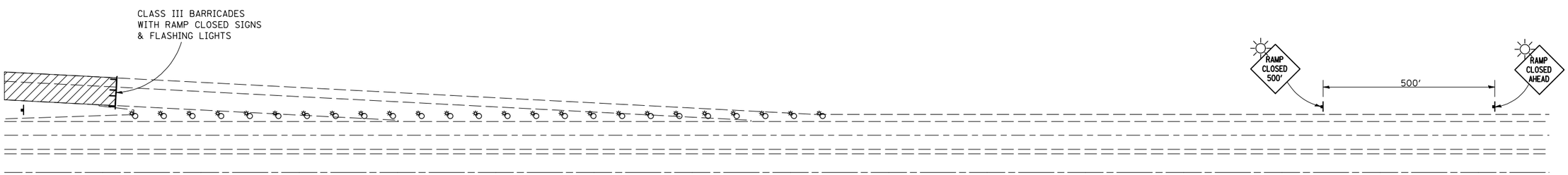

GENERAL NOTES

STEADY BURN LIGHTS ARE NOT REQUIRED FOR DAYTIME OPERATIONS.

CONTACT THE DISTRICT TRAFFIC OPERATIONS ENGINEER
AT 217-465-4181, ONE WEEK PRIOR TO CLOSING THE RAMP.

Note: All dimensions are in INCHES (millimeters) unless otherwise shown.

DISTRICT 5 DETAIL NO. 70103710

FILE NAME = c:\pw_work\pwidot\bowerml\d0110023\70766DETAILS.DGN	USER NAME = bowerml	DESIGNED -	REVISED - 11/06
		DRAWN -	REVISED -
	PLOT SCALE = 40.0000 ′ / IN.	CHECKED -	REVISED -
	PLOT DATE = 12/2/2009	DATE -	REVISED -

STATE OF ILLINOIS
DEPARTMENT OF TRANSPORTATION

TRAFFIC CONTROL FOR RAMPS

SCALE: | SHEET NO. OF SHEETS | STA. TO STA.

F.A.I. RTE.	SECTION	COUNTY	TOTAL SHEETS	SHEET NO.
57	10-37RS-2&(10,27-38)RS-1	CHAMPAIGN	41	39
		CONTRACT NO. 70766		

FED. ROAD DIST. NO. | ILLINOIS | FED. AID PROJECT

ROAD CLOSURE

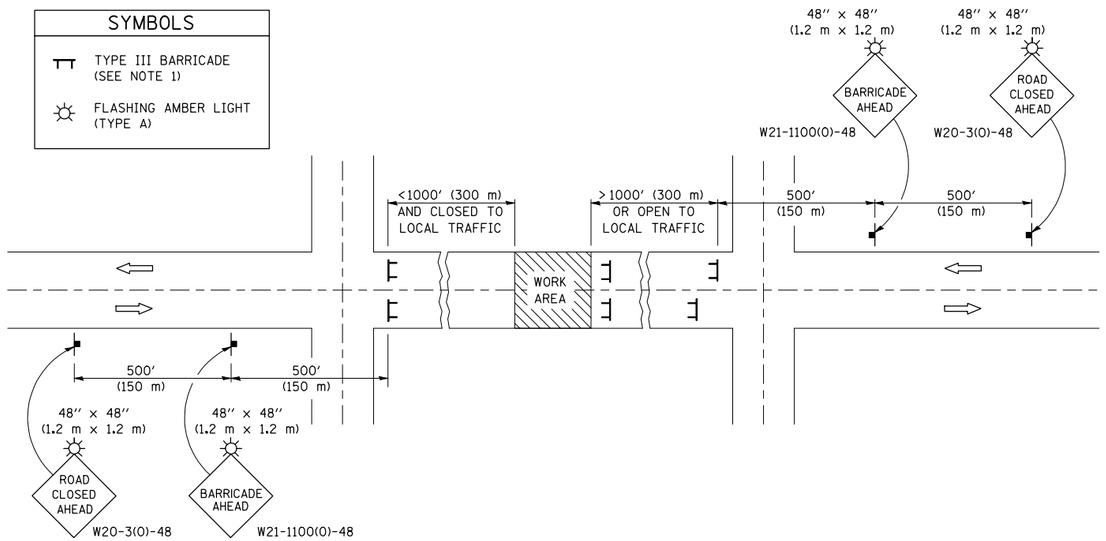

GENERAL NOTES

1. TYPE III BARRICADES SHALL BE AS SHOWN ON STANDARD 701901 "TYPICAL APPLICATIONS OF TYPE III BARRICADES CLOSING A ROAD". EACH TYPE III BARRICADE SHALL HAVE TWO FLASHING AMBER LIGHTS MOUNTED ABOVE IT.
2. IF THE ROAD IS OPEN TO LOCAL TRAFFIC OR EXCEEDS 1000' (300 m), ANOTHER SET OF TYPE III BARRICADES, EQUIPPED AS IN NOTE 1 ABOVE, SHALL BE PLACED AT EACH END OF THE WORK AREA.
3. WHEN A STOP CONDITION EXISTS, NO SIGNS ARE REQUIRED IN ADVANCE OF THE "STOP" SIGN WHEN THE ROAD IS CLOSED WITHIN 100' (30 m) OF THE INTERSECTION.
4. STANDARD 701901 SHALL APPLY FOR THE PLACEMENT & DESIGN OF TYPE III BARRICADES.
5. IF A TYPE III BARRICADE WITH AN ATTACHED SIGN PANEL WHICH MEETS NCHRP 350 IS NOT AVAILABLE, THE SIGNS MAY BE MOUNTED ON AN NCHRP 350 TEMPORARY SIGN SUPPORT DIRECTLY IN FRONT OF THE BARRICADE.
6. REFLECTORIZED STRIPING SHALL APPEAR ON BOTH SIDES OF THE TY III BARRICADES IF ROAD IS OPEN TO LOCAL TRAFFIC.
7. ALL SIGNS SHALL BE POST MOUNTED IF THE CLOSURE TIME EXCEEDS FOUR DAYS.
8. A MINIMUM OF TWO FLASHING LIGHTS SHALL BE USED AT NIGHT ON EACH APPROACH IN ADVANCE OF THE WORK AREA. FLASHING LIGHTS SHALL BE INSTALLED ABOVE THE FIRST TWO SIGNS IN THE SERIES.
9. LONGITUDINAL DIMENSIONS MAY BE ADJUSTED SLIGHTLY TO FIT FIELD CONDITIONS.
10. FORMS BT. 725 AND BT. 726 ARE REQUIRED.
11. WHEN A SIDEROAD INTERSECTS THE HIGHWAY ON WHICH WORK IS BEING PERFORMED, ADDITIONAL TRAFFIC DEVICES SHALL BE ERECTED AND PROVIDED AS DIRECTED BY THE ENGINEER.
12. AN ADDITIONAL SIGN MAY BE REQUIRED AT A MAJOR INTERSECTING ROAD IN ADVANCE OF THE CLOSURE. THE ADDITIONAL SIGN SHALL GIVE THE DISTANCE TO THE BARRICADE IN MILES OR FRACTIONS OF A MILE.

SIDEROAD / STREET CLOSURE

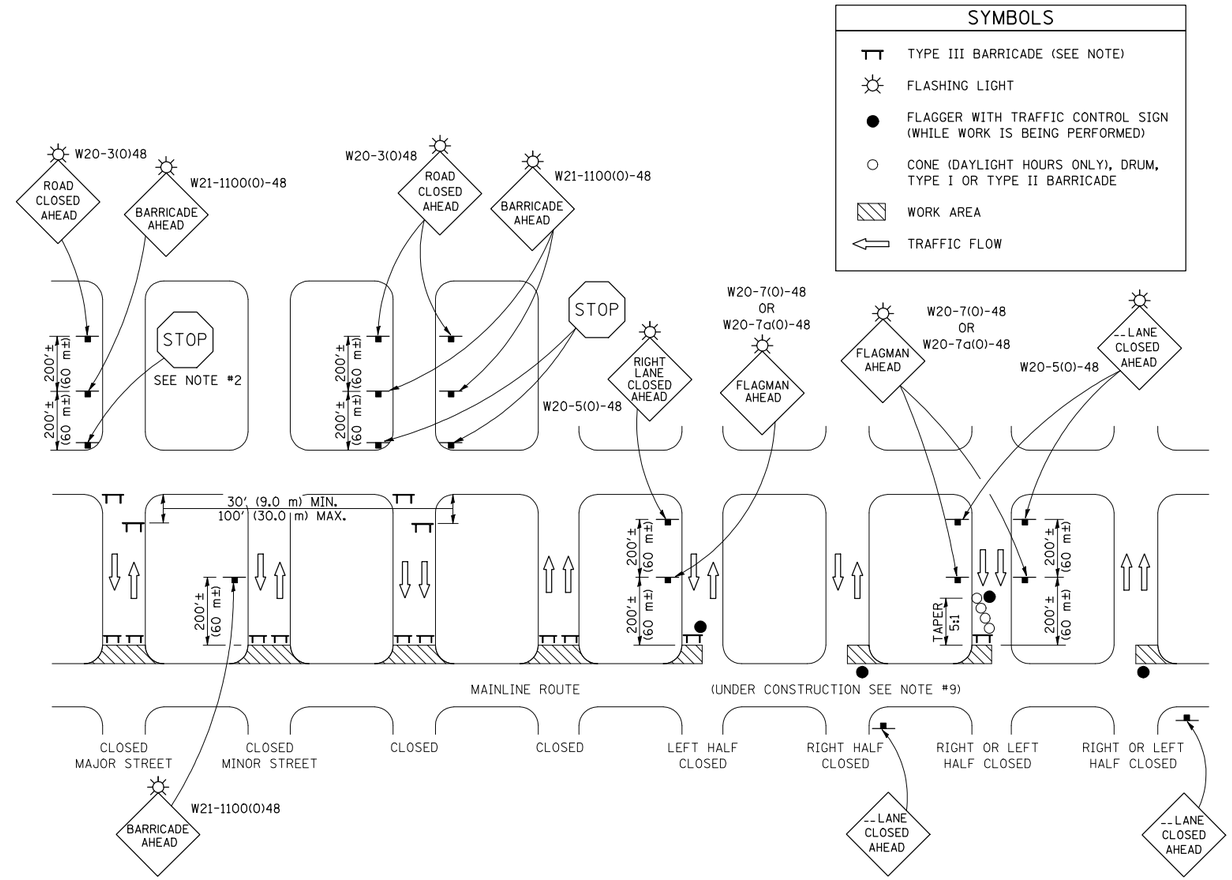

GENERAL NOTES

1. TYPE III BARRICADES SHALL BE AS SHOWN ON "TYPICAL APPLICATIONS OF TYPE III BARRICADES CLOSING A ROAD". EACH TYPE III BARRICADE SHALL HAVE TWO FLASHING AMBER LIGHTS MOUNTED ABOVE IT.
2. WHERE A STOP CONDITION EXISTS, AS SHOWN ABOVE, WARNING SIGNS MAY BE OMITTED IN ADVANCE OF THE "STOP" SIGN.
3. STANDARD 701901 SHALL APPLY FOR THE PLACEMENT & MANUFACTURE OF TYPE III BARRICADES.
4. ALL SIGNS SHALL BE POST MOUNTED IF THE CLOSURE TIME EXCEEDS FOUR DAYS.
5. ONE FLASHING LIGHT IS REQUIRED ABOVE EACH ADVANCE WARNING SIGN DURING HOURS OF DARKNESS.
6. LONGITUDINAL DIMENSIONS MAY BE ADJUSTED SLIGHTLY TO FIT FIELD CONDITIONS.
7. FORMS BT 725 AND BT 726 ARE REQUIRED.
8. THE MAINLINE ROUTE TEMPORARY TRAFFIC CONTROL SHALL BE IN ACCORDANCE WITH THE PLANS, SPECIAL PROVISIONS AND STANDARD SPECIFICATIONS.
9. ALL FLAGGERS REQUIRED AT SIDE ROADS AND ENTRANCES REMAINING OPEN TO TRAFFIC AND/OR ADDITIONAL BARRICADES REQUIRED BY THE ENGINEER TO CLOSE SIDE ROADS AND ENTRANCES WILL BE PAID FOR ACCORDING TO ARTICLE 109.04.

Note: All dimensions are in INCHES (millimeters) unless otherwise shown.

DISTRICT 5 DETAIL NO. 70200000

FILE NAME = c:\pw_work\pwidot\bowerml\d0110023\70766DETAILS.DGN	USER NAME = bowerml	DESIGNED -	REVISED - 11/06	STATE OF ILLINOIS DEPARTMENT OF TRANSPORTATION
		DRAWN -	REVISED - 12/07	
	PLOT SCALE = 40.0000 ' / IN.	CHECKED -	REVISED - 09/09 - KJT	
	PLOT DATE = 12/2/2009	DATE -	REVISED -	

TRAFFIC CONTROL & PROTECTION DEVICES (ROAD & SIDEROAD/STREET CLOSURES)

SCALE: | SHEET NO. OF SHEETS | STA. TO STA.

F.A.I. RTE.	SECTION	COUNTY	TOTAL SHEETS	SHEET NO.
57	10-37RS-2 & (10,27-38)	CHAMPAIGN	41	40
		CONTRACT NO. 70766		

FED. ROAD DIST. NO. | ILLINOIS | FED. AID PROJECT

CENTERLINE INTERSTATE OR MULTI-LANE TWO WAY DIVIDED HIGHWAY

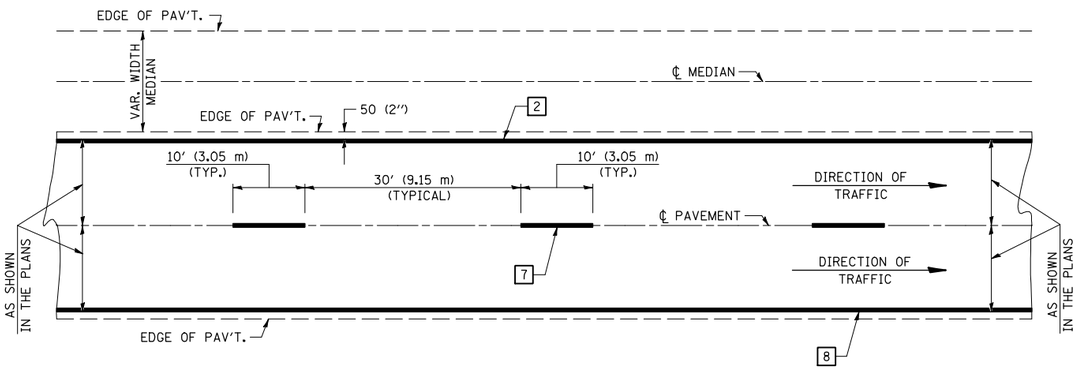

NOTE: PAVEMENT MARKINGS ARE TO BE EXTENDED THROUGH OMISSIONS WHEN APPLICABLE.

NOTE: SEE ARTICLES 780.04 & 781.03 FOR LOCATION OF STRIPES AND MARKERS RELATIVE TO EDGES OR JOINTS.

FOR RAISED REFLECTIVE PAVEMENT MARKERS, REFER TO STANDARD 781001.

TYPICAL EXIT RAMP TERMINAL

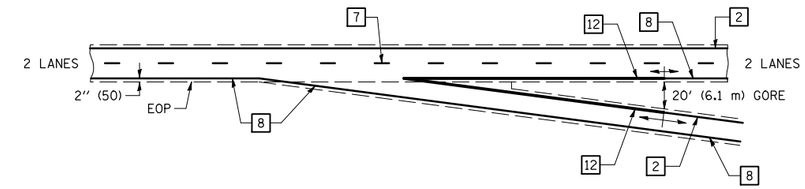

EXIT RAMP TERMINAL with EXCLUSIVE (auxiliary) LANE

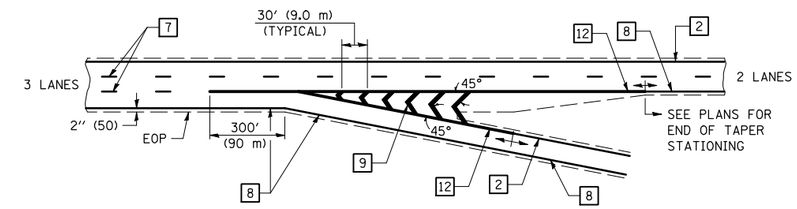

TYPICAL ENTRANCE RAMP TERMINAL

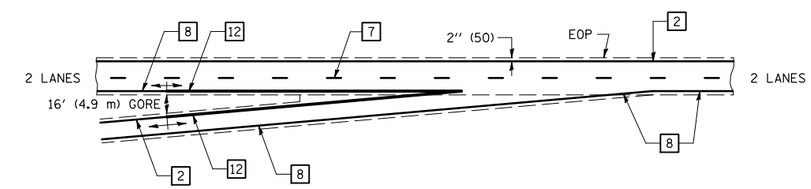

ENTRANCE RAMP TERMINAL with EXCLUSIVE LANE

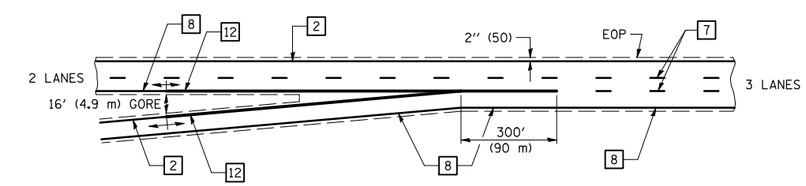

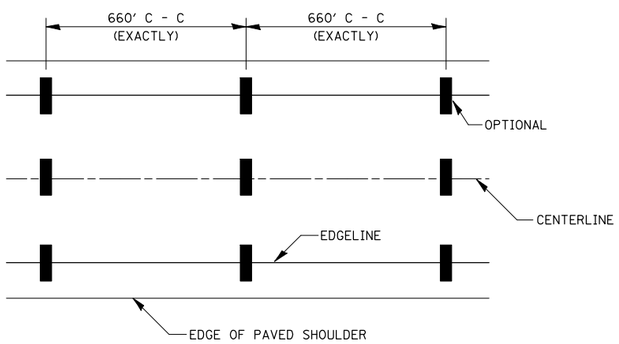

IT WILL BE NECESSARY TO HAVE A REPRESENTATIVE OF THE STATE POLICE PRESENT SO THAT THE ACCURACY OF MEASUREMENT CAN BE ATTESTED TO IN COURT.

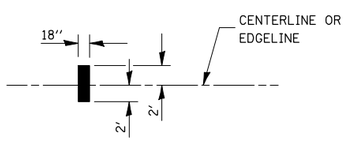

AERIAL SPEED CHECK ZONES

TYPICAL PAVEMENT MARKING LEGEND

1. 4" (100) SKIP-DASH (YELLOW)
2. 4" (100) SOLID (YELLOW)
3. 12" (300) DIAGONAL (YELLOW)
4. 4" (100) DOUBLE YELLOW (NARROW)
5. RESERVED
6. RESERVED
7. 4" (100) SKIP-DASH (WHITE)
8. 4" (100) SOLID (WHITE)
9. 12" (300) DIAGONAL (WHITE)
10. 6" (150) SOLID (WHITE)
11. 24" (600) STOP BAR (WHITE)
12. 8" (200) SOLID (WHITE)
13. 4" (100) LANE LINE EXTENSIONS (WHITE)

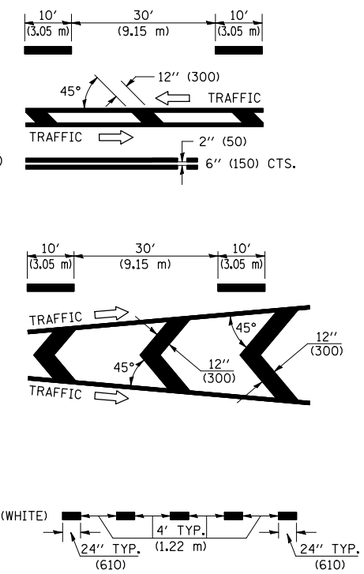

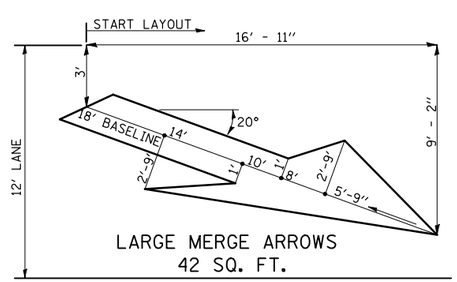

LARGE MERGE ARROWS
42 SQ. FT.

Note: All dimensions are in INCHES (millimeters) unless otherwise shown.

DISTRICT 5 DETAIL NO. 7800BBBB

FILE NAME = c:\pw_work\pwidot\bowerml\d0110023\70766DETAILS.DGN	USER NAME = bowerml	DESIGNED -	REVISED - 11/06
		DRAWN -	REVISED -
	PLOT SCALE = 40.0000 ' / IN.	CHECKED -	REVISED -
	PLOT DATE = 12/2/2009	DATE -	REVISED -

STATE OF ILLINOIS
DEPARTMENT OF TRANSPORTATION

PAVEMENT MARKING (INTERSTATE & MULTI-LANE APPLICATIONS)

SCALE: SHEET NO. OF SHEETS STA. TO STA.

F.A.I. RTE.	SECTION	COUNTY	TOTAL SHEETS	SHEET NO.
57	10-37RS-2&(10,27-38)RS-1	CHAMPAIGN	41	41
		CONTRACT NO. 70766		

FED. ROAD DIST. NO. ILLINOIS FED. AID PROJECT