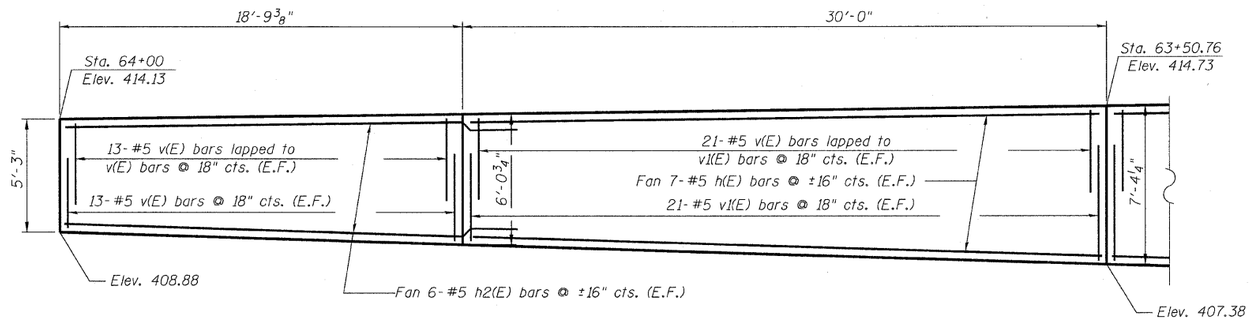

ELEVATION

(Concrete Facing Section 3)

MIN. BAR LAPS

#5 bar = 2'-2"

BILL OF MATERIAL

Bar	No.	Size	Length	Shape
h(E)	56	#5	29'-8"	———
h_1(E)	56	#5	32'-2"	———
h_2(E)	12	#5	20'-9"	———
v(E)	304	#5	4'-0"	———
v_1(E)	42	#5	5'-2"	———
v_2(E)	42	#5	6'-9"	———
v_3(E)	42	#5	8'-5"	———
v_4(E)	42	#5	10'-0"	———
v_5(E)	42	#5	10'-11"	———
v_6(E)	42	#5	11'-9"	———
Concrete Structures			Cu. Yd.	73.3
Reinforcement Bars, Epoxy Coated			Pound	7460

Note: E.F. = Each Face

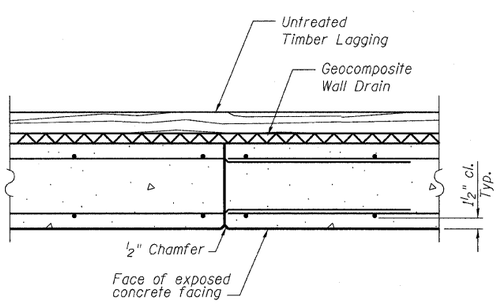

CONSTRUCTION JOINT

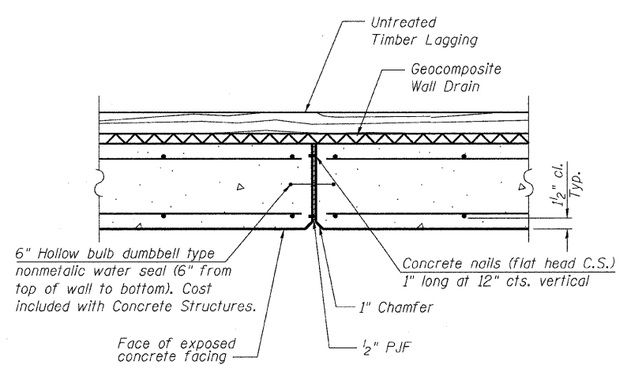

EXPANSION JOINT

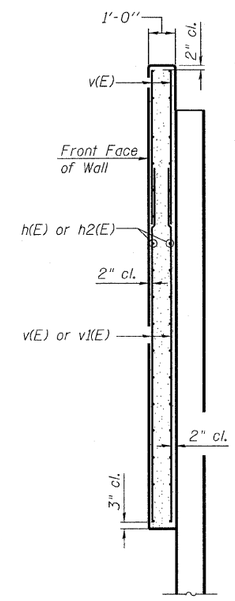

SECTION THRU CONCRETE FACING

HOELSCHER ENGINEERING
Fairview Heights, IL
Springfield, IL
Champaign, IL

CONCRETE FACING SECTION 3
STRUCTURE NO. 082-W301

FILE NAME = H:\SN 082-W301 Final Plans 100909.dgn	USER NAME = default	DESIGNED - CMW	REVISED -	STATE OF ILLINOIS DEPARTMENT OF TRANSPORTATION	CONCRETE FACING SECTION 3 – RETAINING WALL 082–W301			F.A.P. RTE.	SECTION	COUNTY	TOTAL SHEETS	SHEET NO.
		DRAWN - TJW	REVISED -					998	82-1-1HB	ST. CLAIR	236	203
	PLOT SCALE = 2:8 '1' / IN.	CHECKED - JSA	REVISED -							CONTRACT NO. 76C55		
	PLOT DATE = 10/5/2009	DATE - OCT 9, 2009	REVISED -		SCALE: N.T.S.	SHEET NO. 7 OF 9 SHEETS	STA. 62+00.00 TO STA. 64+00.00	FED. ROAD DIST. NO.	ILLINOIS	FED. AID PROJECT		