STATE OF ILLINOIS
DEPARTMENT OF TRANSPORTATION

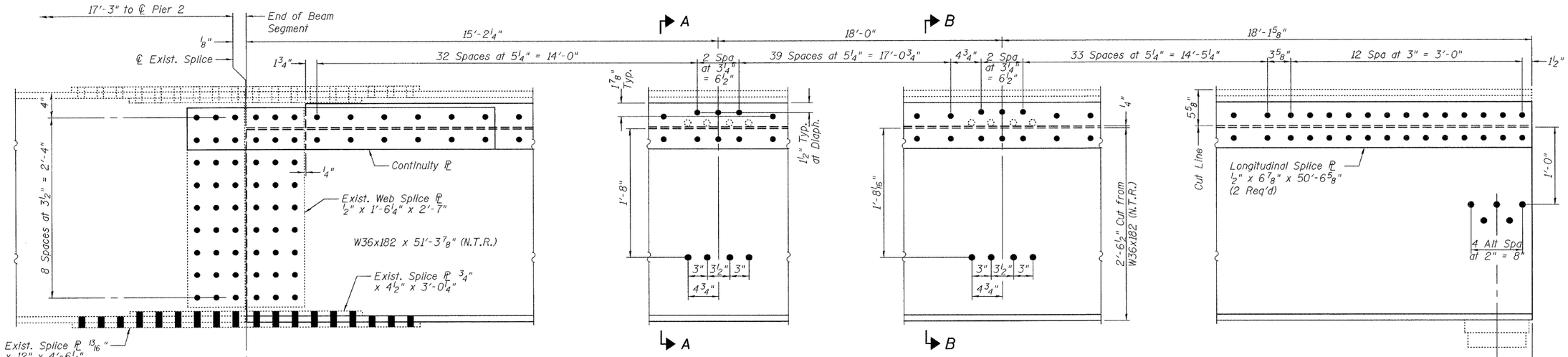

ELEVATION BEAM 1

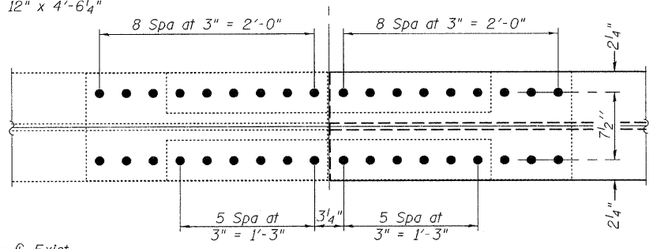

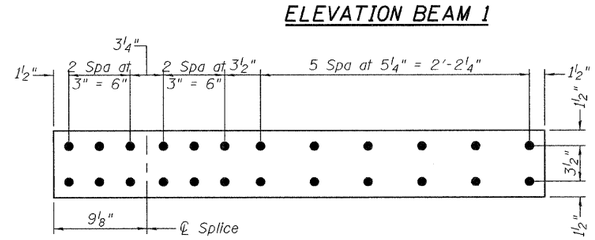

CONTINUITY ℙ
(ℙ ½" x 6½" x 4'-0")
(2 Req'd)

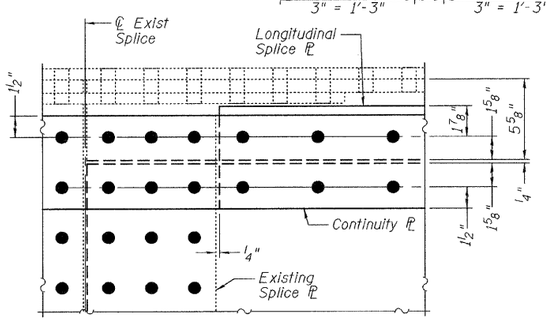

ENLARGED DETAIL

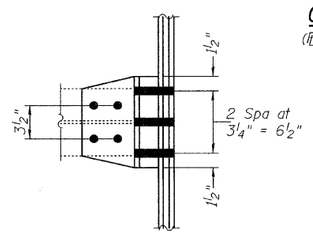

TOP CLIP L DETAIL

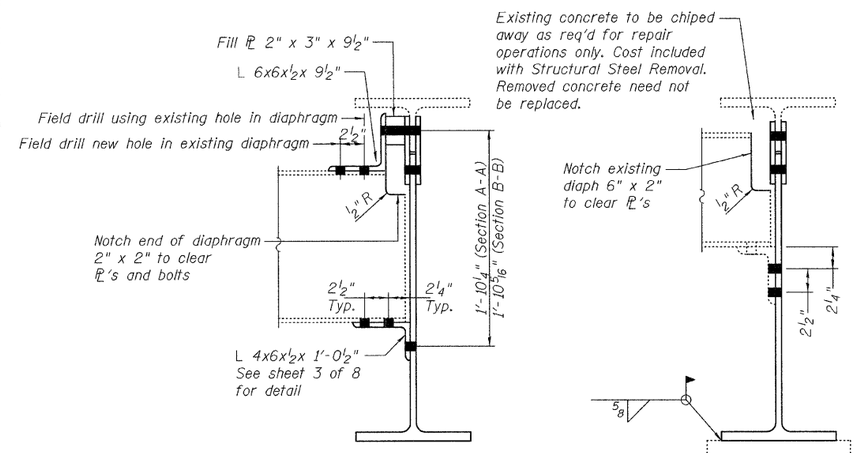

INTERIOR DIAPHRAGM DETAIL
(Sections A-A & B-B)

END DIAPHRAGM SECTION

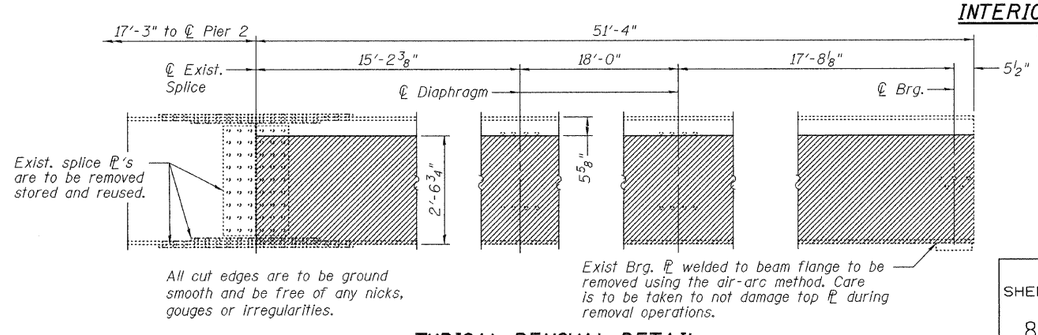

TYPICAL REMOVAL DETAIL

DESIGNED	A.T.H.
CHECKED	G.G.E.
DRAWN	Drew Christopher
CHECKED	A.T.H. G.G.E.

January 21, 2010
EXAMINED — ENGINEER OF STRUCTURAL SERVICES
PASSED — ENGINEER OF BRIDGES AND STRUCTURES

DETAILS
SN 060-0046

SHEET NO. 4 / 8 SHEETS	F.A.I. RTE.	SECTION	COUNTY	TOTAL SHEETS	SHEET NO.
	270	60 B-I-3, 60-1B-I-3, 60-(1,2,3)RS-1, 60-(2HBY, 2VHBY,3HBY-1,3VHBY,3VBY)	Madison	12	8
			CONTRACT NO. 76D30		
	FED. ROAD DIST. NO.	ILLINOIS	FED. AID PROJECT		

SLT-98-001-09

060-0046.dgn 1/21/2010 2:28:58 PM