PAY ITEM NUMBER	DESIGNATION	UNIT	URBAN TOTAL QUANTITY	CONSTRUCTION CODE 0005 80% FEDERAL 20% STATE	100% STATE
20200100	EARTH EXCAVATION	CU YD	100	100	
21101615	TOPSOIL FURNISH AND PLACE, 4"	SQ YD	13	13	
25200110	SODDING, SALT TOLERANT	SQ YD	13	13	
25200200	SUPPLEMENTAL WATERING	UNIT	0.2	0.2	
28000250	TEMPORARY EROSION CONTROL SEEDING	POUND	4	4	
28000510	INLET FILTERS	EACH	17	17	
35101400	AGGREGATE BASE COURSE, TYPE B	TON	53	53	
40600290	BITUMINOUS MATERIALS (TACK COAT)	POUND	70,690	70,690	
40600400	MIXTURE FOR CRACKS, JOINTS, AND FLANGEWAYS	TON	235.7	235.7	
40600982	HOT-MIX ASPHALT SURFACE REMOVAL - BUTT JOINT	SQ YD	1,588	1,588	
40605026	POLYMERIZED HOT-MIX ASPHALT SURFACE COURSE, STONE MATRIX ASPHALT, 9.5, MIX "F", N80	TON	15,395	15,395	
42001300	PROTECTIVE COAT	SQ YD	6,284	6,284	
42400200	PORTLAND CEMENT CONCRETE SIDEWALK 5 INCH	SQ FT	9,957.0	9,957.0	
44000100	PAVEMENT REMOVAL	SQ YD	4	4	
44000156	HOT-MIX ASPHALT SURFACE REMOVAL, 1 3/4"	SQ YD	157,088	157,088	
44000500	COMBINATION CURB AND GUTTER REMOVAL	FOOT	1,339	1,339	
44000600	SIDEWALK REMOVAL	SQ FT	9,929	9,929	
44201811	CLASS D PATCHES, TYPE I, 14 INCH	SQ YD	559	559	
44201815	CLASS D PATCHES, TYPE II, 14 INCH	SQ YD	3,180	3,180	
44201819	CLASS D PATCHES, TYPE III, 14 INCH	SQ YD	1,654	1,654	
44201821	CLASS D PATCHES, TYPE IV, 14 INCH	SQ YD	2,482	2,482	
60255500	MANHOLES TO BE ADJUSTED	EACH	35	35	
60260100	INLETS TO BE ADJUSTED	EACH	14	14	

	PAY ITEM NUMBER	DESIGNATION	UNIT	URBAN TOTAL QUANTITY	CONSTRUCTION CODE 0005 80% FEDERAL 20% STATE	100% STATE
	60266600	VALVE BOXES TO BE ADJUSTED	EACH	12	12	
	60603800	COMBINATION CONCRETE CURB AND GUTTER, TYPE B-6.12	FOOT	1,583.0	1,583.0	
	60605900	COMBINATION CONCRETE CURB AND GUTTER, TYPE B-9.12	FOOT	95.0	95.0	
	60618300	CONCRETE MEDIAN SURFACE, 4 INCH	SQ FT	203	203	
*	66900200	NON-SPECIAL WASTE DISPOSAL	CU YD	100	100	
*	66900530	SOIL DISPOSAL ANALYSIS	EACH	15	15	
*	66901001	REGULATED SUBSTANCES PRE-CONSTRUCTION PLAN	L SUM	1	1	
*	66901003	REGULATED SUBSTANCES FINAL CONSTRUCTION REPORT	L SUM	1	1	
*	66901006	REGULATED SUBSTANCES MONITORING	CAL DA	15	15	
	67000400	ENGINEER'S FIELD OFFICE, TYPE A	CAL MO	12	12	
	67100100	MOBILIZATION	L SUM	1	1	
	70102620	TRAFFIC CONTROL AND PROTECTION, STANDARD 701501	L SUM	1	1	
	70102622	TRAFFIC CONTROL AND PROTECTION, STANDARD 701502	L SUM	1	1	
	70102625	TRAFFIC CONTROL AND PROTECTION, STANDARD 701606	L SUM	1	1	
	70102630	TRAFFIC CONTROL AND PROTECTION, STANDARD 701601	L SUM	1	1	
	70102634	TRAFFIC CONTROL AND PROTECTION, STANDARD 701611	L SUM	1	1	
	70102635	TRAFFIC CONTROL AND PROTECTION, STANDARD 701701	L SUM	1	1	
	70102640	TRAFFIC CONTROL AND PROTECTION, STANDARD 701801	L SUM	1	1	
	70300100	SHORT TERM PAVEMENT MARKING	FOOT	6,798	6,798	
	70300150	SHORT TERM PAVEMENT MARKING REMOVAL	SQ FT	2,266	2,266	
	70300210	TEMPORARY PAVEMENT MARKING LETTERS AND SYMBOLS	SQ FT	1,418	1,418	
	70300220	TEMPORARY PAVEMENT MARKING - LINE 4"	FOOT	23,931	23,931	
	70300240	TEMPORARY PAVEMENT MARKING - LINE 6"	FOOT	5,408	5,408	

* = SPECIALTY ITEM

1 REVISED SHEET 2/19/0201

MODEL: Default
FILE NAME: P:\P-2020-094-00 IDOT Various Phase 2 (PTB 196 Item 16)\Work Order 03\DGN\CADD Sheets\D162L86-SHT-SOQ-01.dgn

INFRASTRUCTURE ENGINEERING | INCORPORATED
1 South Wacker | Suite 2650 | Chicago, IL 60606
P 312.425.9660 | F 312.425.9664 | www.infrastructure-eng.com

USER NAME = ALane	DESIGNED - MPK	REVISED -	
	DRAWN - MPK	REVISED -	
PLOT SCALE = 2.0000 ' / in.	CHECKED - ACL	REVISED -	
PLOT DATE = 1/29/2021	DATE - 01/20/2021	REVISED -	

STATE OF ILLINOIS
DEPARTMENT OF TRANSPORTATION

SUMMARY OF QUANTITIES

SCALE: NTS | STA. | TO STA.

S.B.I. RTE.	SECTION	COUNTY	TOTAL SHEETS	SHEET NO.
2812	2020-108-RS&SW	COOK	77	3

CONTRACT NO. 62L86

ILLINOIS | FED. AID PROJECT

PAY ITEM NUMBER	DESIGNATION	UNIT	URBAN TOTAL QUANTITY	CONSTRUCTION CODE 0005 80% FEDERAL 20% STATE	CONSTRUCTION CODE 0005 100% STATE
70300260	TEMPORARY PAVEMENT MARKING - LINE 12"	FOOT	307	307	
70300280	TEMPORARY PAVEMENT MARKING - LINE 24"	FOOT	9,465	9,465 △1	
70300520	PAVEMENT MARKING TAPE, TYPE III 4"	FOOT	14,155	14,155	
* 78000100	THERMOPLASTIC PAVEMENT MARKING - LETTERS AND SYMBOLS	SQ FT	1,345	1,345	
* 78000200	THERMOPLASTIC PAVEMENT MARKING - LINE 4"	FOOT	23,422	23,422	
* 78000400	THERMOPLASTIC PAVEMENT MARKING - LINE 6"	FOOT	5,228	5,228 △1	
* 78000600	THERMOPLASTIC PAVEMENT MARKING - LINE 12"	FOOT	307	307	
* 78000650	THERMOPLASTIC PAVEMENT MARKING - LINE 24"	FOOT	9,638	9,638 △1	
* 78009000	MODIFIED URETHANE PAVEMENT MARKING - LETTERS AND SYMBOLS	SQ FT	73	73	
* 78009004	MODIFIED URETHANE PAVEMENT MARKING - LINE 4"	FOOT	509	509	
* 78009006	MODIFIED URETHANE PAVEMENT MARKING - LINE 6"	FOOT	180	180	
* 78009024	MODIFIED URETHANE PAVEMENT MARKING - LINE 24"	FOOT	29	29	
78300202	PAVEMENT MARKING REMOVAL - WATER BLASTING	SQ FT	609	609	
* 88600600	DETECTOR LOOP REPLACEMENT	FOOT	10,400	10,400	
89502376	REBUILD EXISTING HANDHOLE	EACH	16	16	
X0320050	CONSTRUCTION LAYOUT (SPECIAL)	L SUM	1	1	
* X2600012	REMOVE AND RELOCATE SIGN PANEL AND POLE ASSEMBLY	EACH	2	2	
X2800001	IMPRINTED THERMOPLASTIC CROSSWALK	SQ YD	662	662 △1	
X4200805	INTERSECTION INLAY	SQ FT	11,145	11,145	
X4240800	DETECTABLE WARNINGS (SPECIAL)	SQ FT	939	939	
X4400501	COMBINATION CURB AND GUTTER REMOVAL AND REPLACEMENT LESS THAN OR EQUAL TO 10 FEET	FOOT	7,927	7,927	
X5537800	STORM SEWERS TO BE CLEANED 12"	FOOT	2,831		2,831
Z0004562	COMBINATION CONCRETE CURB AND GUTTER REMOVAL AND REPLACEMENT	FOOT	3,397.5	3,397.5	

* = SPECIALTY ITEM

PAY ITEM NUMBER	DESIGNATION	UNIT	URBAN TOTAL QUANTITY	CONSTRUCTION CODE 0005 80% FEDERAL 20% STATE	CONSTRUCTION CODE 0005 100% STATE
Z0018500	DRAINAGE STRUCTURES TO BE CLEANED	EACH	262		262
Z0030850	TEMPORARY INFORMATION SIGNING	SQ FT	284	284	
Z0033700	LONGITUDINAL JOINT SEALANT	FOOT	91,201	91,201	
Ø Z0076600	TRAINEES	HOURS	500	500	
Ø Z0076604	TRAINEE - TRAINING PROGRAM GRADUATE	HOURS	500	500	

Ø 0042

△1 REVISED SHEET 2/19/2021

REV-SEP

MODEL: Default
FILE NAME: P:\P-20-20-4094-00 IDOT Various Phase 2 (PTB 196 Item 16)\Work Order 03\DGN\CADD_Sheets\D162L86-SHT-SOQ-02.dgn

INFRASTRUCTURE ENGINEERING | INCORPORATED
1 South Wacker | Suite 2650 | Chicago, IL 60606
P 312.425.9588 | F 312.425.9594 | www.infrastructure-eng.com

USER NAME = ALane	DESIGNED - MPK	REVISED -	
	DRAWN - MPK	REVISED -	
PLOT SCALE = 2.0000 ' / in.	CHECKED - ACL	REVISED -	
PLOT DATE = 1/29/2021	DATE - 01/20/2021	REVISED -	

STATE OF ILLINOIS
DEPARTMENT OF TRANSPORTATION

SUMMARY OF QUANTITIES

SCALE: NTS | STA. | TO STA.

S.B.I. RTE.	SECTION	COUNTY	TOTAL SHEETS	SHEET NO.
2812	2020-108-RS&SW	COOK	77	4

CONTRACT NO. 62L86

ILLINOIS | FED. AID PROJECT

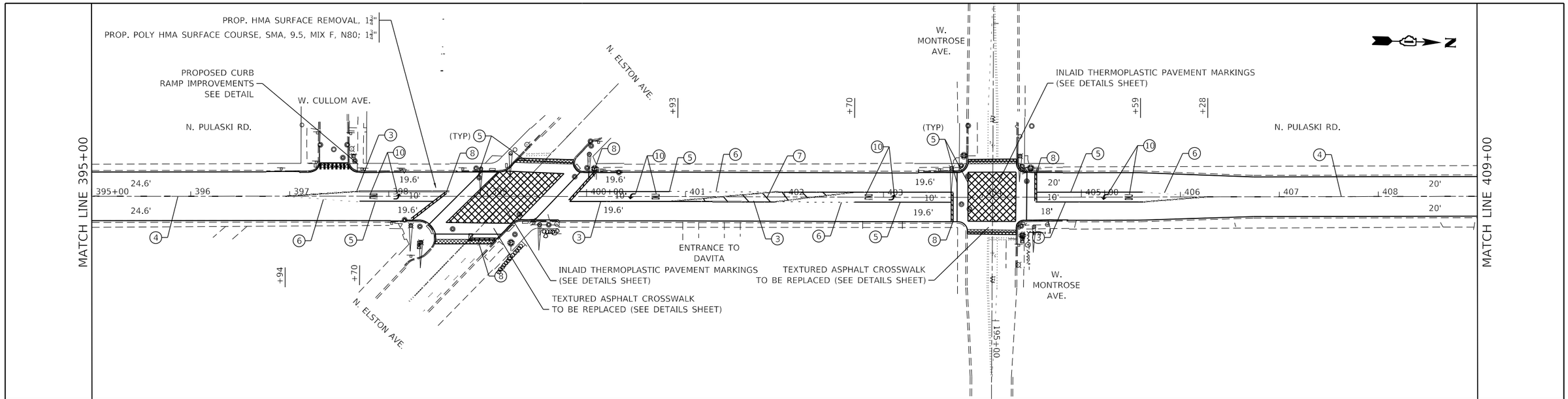

LEGEND

HMA SURFACE REMOVAL BUTT JOINT, 4.5'

PAVEMENT MARKING LEGEND

1. THERMOPLASTIC PAVEMENT MARKING - LINE 4" (WHITE)
2. THERMOPLASTIC PAVEMENT MARKING - LINE 4" (WHITE, 18' SKIP/6' DASH)
3. THERMOPLASTIC PAVEMENT MARKING - LINE 4" (DOUBLE YELLOW)
4. THERMOPLASTIC PAVEMENT MARKING - LINE 4" (YELLOW, 18' SKIP/6' DASH)
5. THERMOPLASTIC PAVEMENT MARKING - LINE 6" (WHITE SOLID LINE)
6. THERMOPLASTIC PAVEMENT MARKING - LINE 6" (DOTTED WHITE, 6' SKIP/2' DASH)
7. THERMOPLASTIC PAVEMENT MARKING - LINE 12" (YELLOW)
8. THERMOPLASTIC PAVEMENT MARKING - LINE 24" (WHITE)
9. THERMOPLASTIC PAVEMENT MARKING - LINE 24" (WHITE CONTINENTAL CROSSWALK 6' WIDE @ 4' C-C)
10. THERMOPLASTIC PAVEMENT MARKING - LETTERS AND SYMBOLS

NOTES:

1. LIMIT OF RESURFACING ON THE SIDE STREET THROUGHOUT THE PROJECT SHALL BE TO THE RADIUS RETURN, UNLESS OTHERWISE SHOWN ON THE PLANS, OR AS DIRECTED BY THE RESIDENT ENGINEER/TECHNICIAN.
2. ALL FINAL PAVEMENT MARKINGS SHALL BE THERMOPLASTIC PAVEMENT MARKINGS (OF THE EXTRUDED TYPE).
3. ALL FINAL PAVEMENT MARKINGS SHALL BE PLACED IN ACCORDANCE WITH TC-24 "CITY OF CHICAGO TYPICAL PAVEMENT MARKINGS" STANDARD DETAIL.

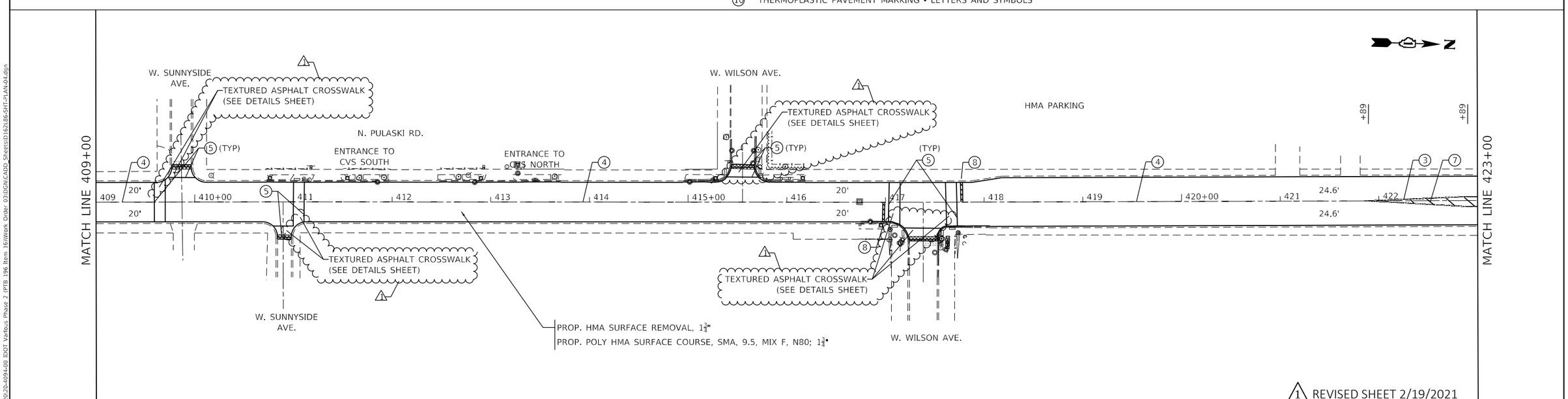

1 REVISED SHEET 2/19/2021

MODEL: Default
FILE NAME: P:\P-20-20-4094-00 IDOT Various Phase 2 (PTB 196 Item 16)\Work Order 03\DGN\CADD_Sheets\D162L86-SHT-PLAN-04.dgn

INFRASTRUCTURE ENGINEERING INCORPORATED
1 South Wacker | Suite 2650 | Chicago, IL 60606
P 312.425.9560 | F 312.425.9564 | www.infrastructure-eng.com

USER NAME = ALane	DESIGNED - MPK	REVISED - 1 ACL 2/18/2021	
	DRAWN - MAS	REVISED -	
PLOT SCALE = 100.0000 ' / in.	CHECKED - ACL	REVISED -	
PLOT DATE = 2/19/2021	DATE - 01/20/2021	REVISED -	

STATE OF ILLINOIS
DEPARTMENT OF TRANSPORTATION

ROADWAY AND PAVEMENT MARKING PLAN
PULASKI ROAD FROM IL-64 (NORTH AVE) TO DEVON AVE

SCALE: 1" = 50' | STA. 395+00 TO STA. 423+00

S.B.I. RTE.	SECTION	COUNTY	TOTAL SHEETS	SHEET NO.
2812	2020-108-RS&SW	COOK	77	16

CONTRACT NO. 62L86
ILLINOIS | FED. AID PROJECT

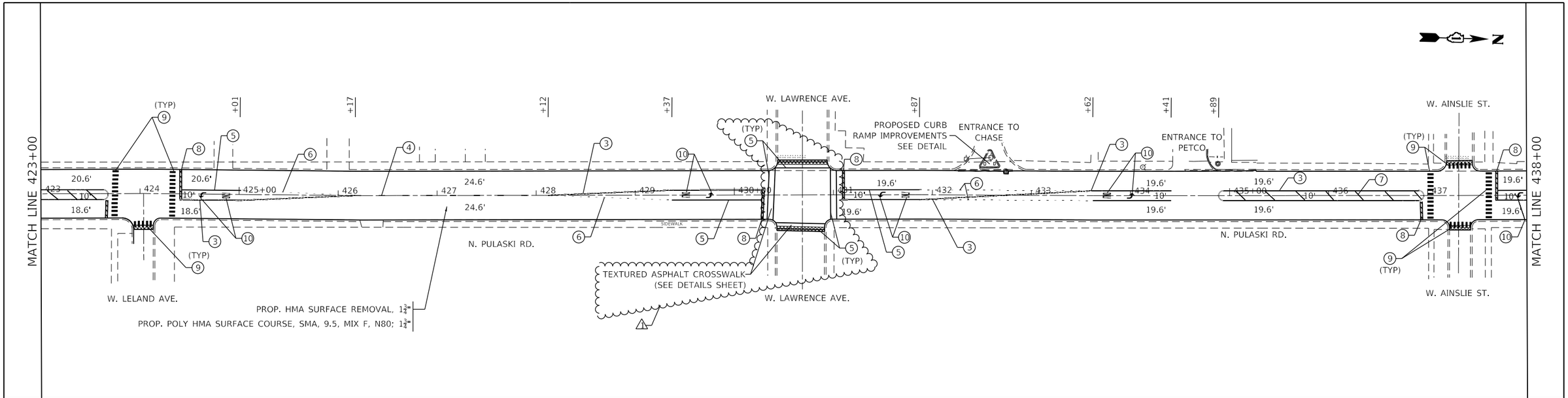

LEGEND

HMA SURFACE REMOVAL BUTT JOINT, 4.5'

PAVEMENT MARKING LEGEND

1. THERMOPLASTIC PAVEMENT MARKING - LINE 4" (WHITE)
2. THERMOPLASTIC PAVEMENT MARKING - LINE 4" (WHITE, 18' SKIP/6' DASH)
3. THERMOPLASTIC PAVEMENT MARKING - LINE 4" (DOUBLE YELLOW)
4. THERMOPLASTIC PAVEMENT MARKING - LINE 4" (YELLOW, 18' SKIP/6' DASH)
5. THERMOPLASTIC PAVEMENT MARKING - LINE 6" (WHITE SOLID LINE)
6. THERMOPLASTIC PAVEMENT MARKING - LINE 6" (DOTTED WHITE, 6' SKIP/2' DASH)
7. THERMOPLASTIC PAVEMENT MARKING - LINE 12" (YELLOW)
8. THERMOPLASTIC PAVEMENT MARKING - LINE 24" (WHITE)
9. THERMOPLASTIC PAVEMENT MARKING - LINE 24" (WHITE CONTINENTAL CROSSWALK 6' WIDE @ 4' C-C)
10. THERMOPLASTIC PAVEMENT MARKING - LETTERS AND SYMBOLS

NOTES:

1. LIMIT OF RESURFACING ON THE SIDE STREET THROUGHOUT THE PROJECT SHALL BE TO THE RADIUS RETURN, UNLESS OTHERWISE SHOWN ON THE PLANS, OR AS DIRECTED BY THE RESIDENT ENGINEER/TECHNICIAN.
2. ALL FINAL PAVEMENT MARKINGS SHALL BE THERMOPLASTIC PAVEMENT MARKINGS (OF THE EXTRUDED TYPE).
3. ALL FINAL PAVEMENT MARKINGS SHALL BE PLACED IN ACCORDANCE WITH TC-24 "CITY OF CHICAGO TYPICAL PAVEMENT MARKINGS" STANDARD DETAIL.

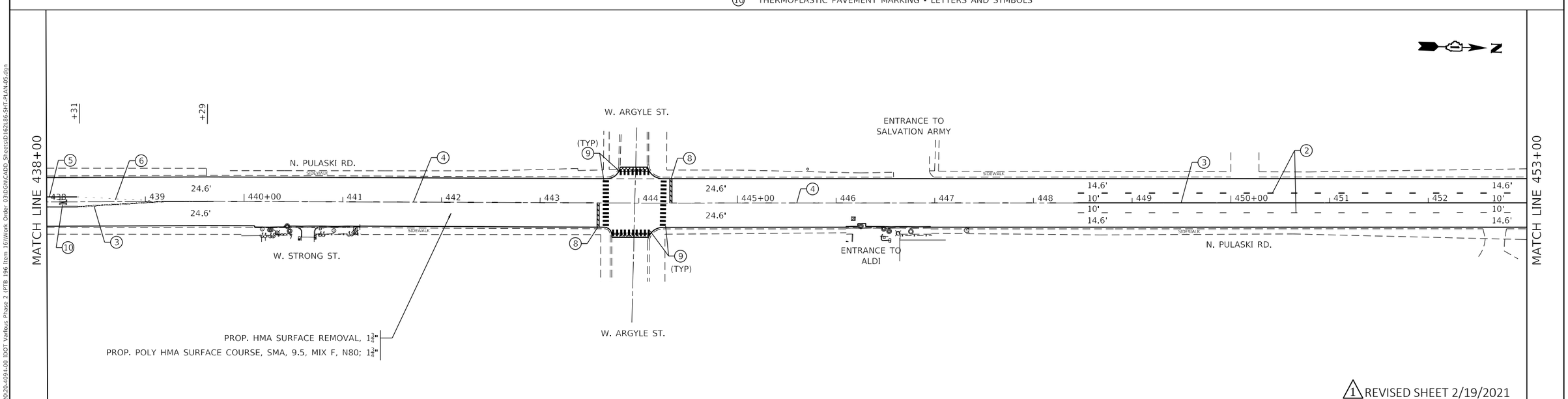

1 REVISED SHEET 2/19/2021

MODEL: Default
FILE NAME: P:\P-20-20-4094-00 IDOT Various Phase 2 (PTB 196 Item 16)\Work Order 03\DGN\CADD_Sheets\D162L86-SHT-PLAN-05.dgn

INFRASTRUCTURE ENGINEERING | INCORPORATED
1 South Wacker | Suite 2650 | Chicago, IL 60606
P 312.425.9560 | F 312.425.9564 | www.infrastructure-eng.com

USER NAME = ALane	DESIGNED - MPK	REVISED - 1 ACL 2/18/2021	
	DRAWN - MAS	REVISED -	
PLOT SCALE = 100.0000 ' / in.	CHECKED - ACL	REVISED -	
PLOT DATE = 2/18/2021	DATE - 01/20/2021	REVISED -	

STATE OF ILLINOIS
DEPARTMENT OF TRANSPORTATION

ROADWAY AND PAVEMENT MARKING PLAN
PULASKI ROAD FROM IL-64 (NORTH AVE) TO DEVON AVE

SCALE: 1" = 50' | STA. 423+00 TO STA. 453+00

S.B.I. RTE.	SECTION	COUNTY	TOTAL SHEETS	SHEET NO.
2812	2020-108-RS&SW	COOK	77	17
		CONTRACT NO. 62L86		
		ILLINOIS	FED. AID PROJECT	