CONTROLLER SEQUENCE

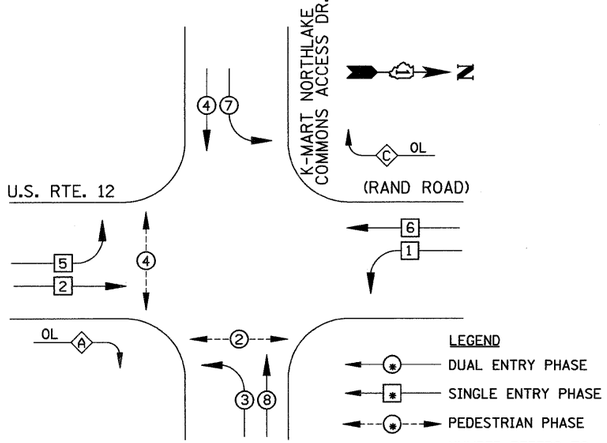

PHASE DESIGNATION DIAGRAM

RIGHT TURN OVERLAP DESIGNATION

OVERLAP LETTER		PERMISSIVE PHASE		PROTECTED PHASE
A	=	2	+	3
C	=	6	+	7

EMERGENCY VEHICLE PREEMPTION SEQUENCE

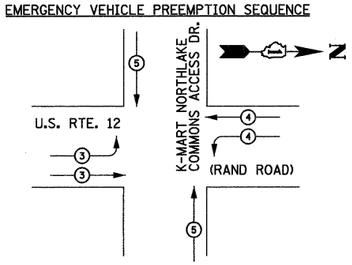

PROPOSED EMERGENCY VEHICLE PREEMPTOR			
EMERGENCY VEHICLE PREEMPTOR	3	4	5
MOVEMENT			

CABLE PLAN LEGEND

EXISTING	PROPOSED	
	G	8" (200mm) TRAFFIC SIGNAL SECTION
	R	12" (300mm) TRAFFIC SIGNAL SECTION
	W	12" (300mm) PEDESTRIAN SIGNAL SECTION
	04	12" (300mm) PEDESTRIAN SIGNAL SECTION WITH COUNTDOWN TIMER
		CONTROLLER CABINET
		SERVICE INSTALLATION
	T	TELEPHONE CONNECTION
		MAGNETIC DETECTOR
		EMERGENCY VEHICLE LIGHT DETECTOR
		CONFIRMATION BEACON
		PUSH-BUTTON DETECTOR
		VEHICLE DETECTOR, INDUCTION LOOP
2	2	DENOTES NUMBER OF CONDUCTORS, ALL CABLE NO. 14 EXCEPT AS INDICATED. ALL LOOP DETECTOR CABLE TO BE SHIELDED.
1	1	GROUND CABLE IN CONDUIT NO. 6 SOLID COPPER (GREEN)
24	24	FIBER OPTIC CABLE IN CONDUIT NO. 62.5/125 2-MM12F SM12F
R Y G ←Y ←G "P"	R Y G ←Y ←G "P"	SIGNAL FACE WITH BACKPLATE, "P" INDICATES PROGRAMMED HEAD
"E"	"E"	RAILROAD CONTROL CABINET
"E"		ILLUMINATED SIGN "NO LEFT TURN"
"E"		ILLUMINATED SIGN "NO RIGHT TURN"
H/C	C	GROUND ROD AT HANDHOLE (H), DOUBLE HANDHOLE (H), OR CONTROLLER (C)
P	P	GROUND ROD AT POST (P), OR MAST ARM POLE (MA)
S	S	GROUND ROD AT ELECTRIC SERVICE INSTALLATION
B	B	UNINTERRUPTIBLE POWER SUPPLY

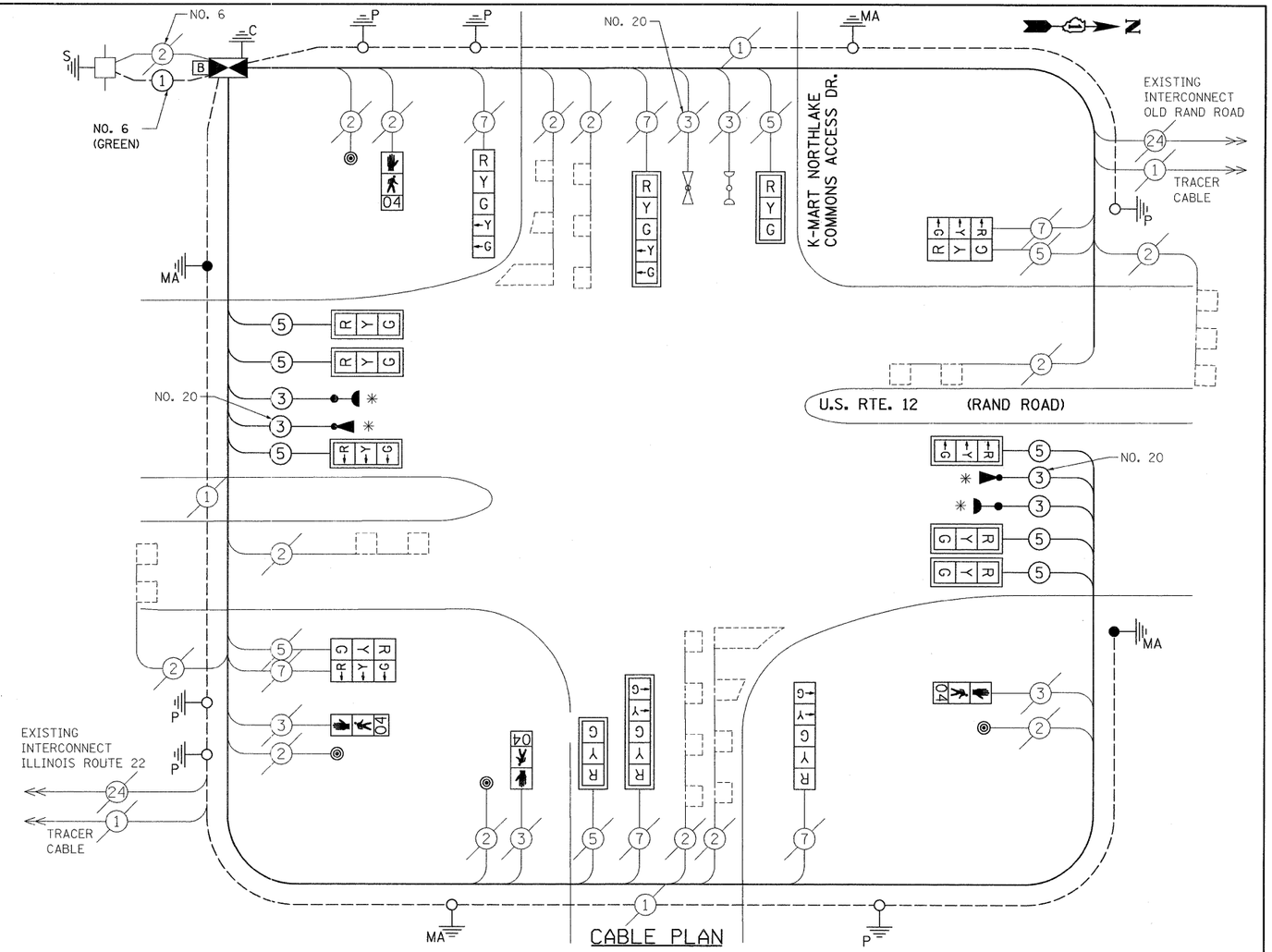

CABLE PLAN

SCHEDULE OF QUANTITIES

MOBILIZATION	L SUM	0.125
ENGINEERS FIELD OFFICE, TYPE A	CAL MO	0.5
TRAFFIC CONTROL AND PROTECTION, STANDARD 701701	L SUM	0.125
SIGN PANEL, TYPE 1	SQ FT	20
CONDUIT IN TRENCH, 2½" DIA., GALVANIZED STEEL	FOOT	56
TRENCH AND BACKFILL FOR ELECTRICAL WORK	FOOT	56
MAINTENANCE OF EXISTING TRAFFIC SIGNAL INSTALLATION	EACH	1
FULL-ACTUATED CONTROLLER AND TYPE IV CABINET, SPECIAL	EACH	1
ELECTRIC CABLE IN CONDUIT, SIGNAL NO. 14 3C	FOOT	420
ELECTRIC CABLE IN CONDUIT, SIGNAL NO. 14 5C	FOOT	1291
TRAFFIC SIGNAL POST, GALVANIZED STEEL 14 FT.	EACH	1
TRAFFIC SIGNAL POST, GALVANIZED STEEL 16 FT.	EACH	1
STEEL MAST ARM ASSEMBLY AND POLE, 40 FT.	EACH	2
CONCRETE FOUNDATION, TYPE E 36-INCH DIAMETER	FOOT	30
DRILL EXISTING HANDHOLE	EACH	2
SIGNAL HEAD, LED, 1-FACE, 3-SECTION, MAST-ARM MOUNTED	EACH	8
SIGNAL HEAD, LED, 1-FACE, 5-SECTION, BRACKET MOUNTED	EACH	2
SIGNAL HEAD, LED, 1-FACE, 5-SECTION, MAST-ARM MOUNTED	EACH	2
SIGNAL HEAD, LED, 2-FACE, 3-SECTION, BRACKET MOUNTED	EACH	2
PEDESTRIAN SIGNAL HEAD, L.E.D., 1-FACE, BRACKET MOUNTED WITH COUNTDOWN TIMER	EACH	4
TRAFFIC SIGNAL BACKPLATE, LOUVERED, ALUMINUM	EACH	10
* LIGHT DETECTOR	EACH	2
* LIGHT DETECTOR AMPLIFIER	EACH	1
PEDESTRIAN PUSH-BUTTON	EACH	4
REMOVE ELECTRIC CABLE FROM CONDUIT	FOOT	1027
REMOVE EXISTING TRAFFIC SIGNAL EQUIPMENT	EACH	1
REMOVE EXISTING CONCRETE FOUNDATION	EACH	2
TEMPORARY INFORMATION SIGNING	SQ FT	12.85
RE-OPTIMIZE TRAFFIC SIGNAL SYSTEM - LEVEL II	EACH	1
ELECTRIC CABLE IN CONDUIT, GROUNDING, NO. 6 1C	FOOT	502
* ELECTRIC CABLE IN CONDUIT, NO. 20 3/C, TWISTED & SHIELDED	FOOT	420
UNINTERRUPTIBLE POWER SUPPLY	EACH	1

* 100% COST TO THE VILLAGE OF LAKE ZURICH

NOTE:

THE TRAFFIC SIGNAL CONTROL EQUIPMENT FOR THIS PROJECT SHALL BE "ECONOLITE".

I.D.O.T TRAFFIC SIGNAL INSTALLATION ELECTRICAL SERVICE REQUIREMENTS					TOTAL WATTAGE
TYPE	NO. LAMPS	WATTAGE INCAND.	WATTAGE LED	%OPERATION	
SIGNAL (RED)	17	135	17	0.50	144.5
(YELLOW)	17	135	25	0.25	106.25
(GREEN)	17	135	15	0.25	63.75
ARROW	8	135	12	0.10	9.6
PED. SIGNAL	4	90	25	1.00	100
CONTROLLER	1	100	100	1.00	100
ILLUM. SIGN		84		0.05	
FLASHER				0.50	
				TOTAL =	524.1

ENERGY COSTS TO:
VILLAGE OF LAKE ZURICH
70 EAST MAIN STREET
LAKE ZURICH, IL 60047

ENERGY SUPPLY CONTACT: DOTTIE PROSEN
PHONE: (847) 816-5323
COMPANY: COMED

FOUNDATION (DEPTH)	FT. (m)	CABLE SLACK	FT. (m)	VERTICAL	FT. (m)
TYPE A - POST	4 (1.2)	HANDHOLE	6.5 (2.0)	ALL FOUNDATIONS	3.0 (1.0)
D - CONTROLLER	4 (1.2)	DOUBLE HANDHOLE	13 (4.0)	MAST ARM (L) POLE	20.0 (6.0)
E - M. ARM POLE		SIGNAL POST	0 (0.0)	BRACKET MOUNTED	13 (4.0)
24" (600mm)	10 (3.0)	CONTROLLER CAB.	0 (0.0)	PED. PUSH-BUTTON	6 (2.0)
30" (750mm)	15 (4.6)	FIBER OPTIC	13 (4.0)	ELECTRIC SERVICE	13.5 (4.1)
		ELECTRIC SERVICE	1 (0.5)	SERVICE TO GROUND	13.5 (4.1)
		GROUND CABLE	1 (0.5)	POST MOUNTED	13 (4.0)

PREPARED BY:
CEMCON, Ltd.
Consulting Engineers, Land Surveyors & Planners
2280 White Oak Circle, Suite 100
Aurora, Illinois 60504-9675
Ph: 630.862.2100 Fax: 630.862.2199
E-Mail: cadd@cemcon.com Website: www.cemcon.com

FILE NAME = \MICROST\352056\ 13-KMART CAB.DGN	USER NAME = JLA	DESIGNED - KK	REVISED -
		DRAWN - JLA	REVISED -
	PLOT SCALE = 1"=20'	CHECKED - BPT	REVISED -
	PLOT DATE = 12-10-08	DATE - 12-10-08	REVISED -

STATE OF ILLINOIS
DEPARTMENT OF TRANSPORTATION

SCHEDULE OF QUANTITIES, CABLE PLAN AND PHASE DESIGNATION DIAGRAM
U.S. ROUTE 12 (RAND ROAD) AT K-MART

SCALE: N.T.S. | SHEET NO. OF SHEETS | STA. TO STA.

F.A.P RTE.	SECTION	COUNTY	TOTAL SHEETS	SHEET NO.
334	2008-069 TS	LAKE	26	13
		CONTRACT NO. 60F62		
FED. ROAD DIST. NO.	ILLINOIS	FED. AID PROJECT		