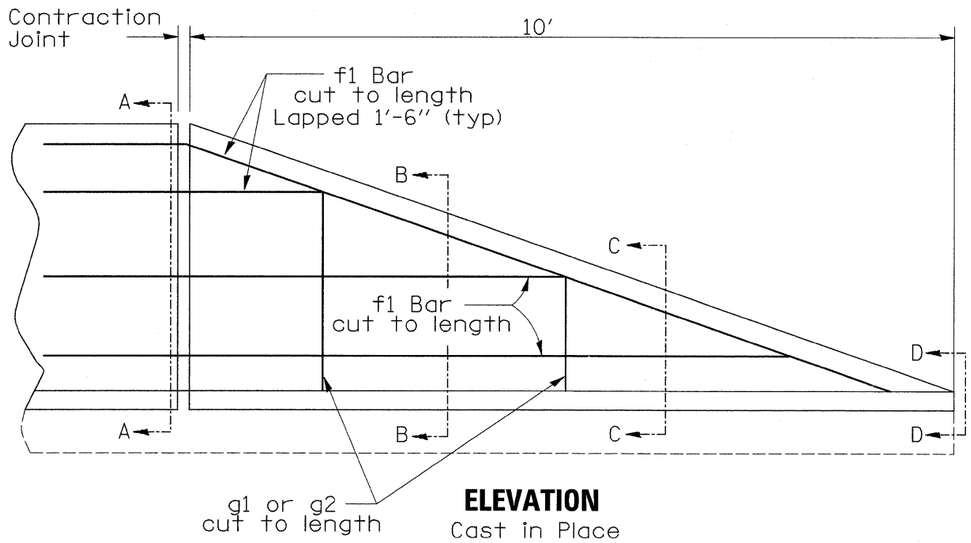

ELEVATION
Cast in Place

GENERAL NOTES:

1. All exposed corners are to be filleted with a $\frac{3}{4}''$ dressed and beveled strip.
2. 1 inch diameter deformed bars or sufficient length to ensure 6 inch minimum embedment in rail and supporting surface. Bars shall be either installed in supporting surface when placed or installed in drilled holes using polymer grout or hydraulic cement grout. Dower location may be adjusted 6 inches to avoid bridge approach reinforcement.
3. This work shall be paid for at the contract unit price per cu yd as Concrete Barrier Wall (Special).

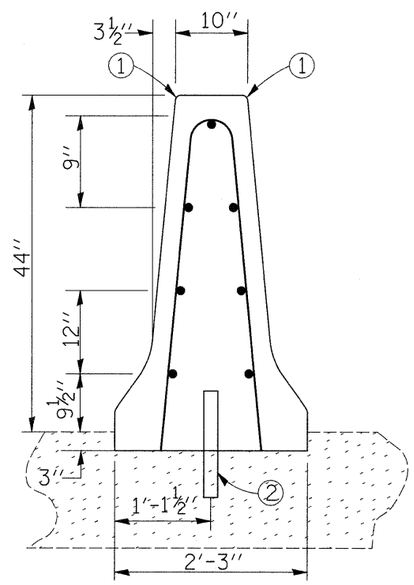

SECTION A–A

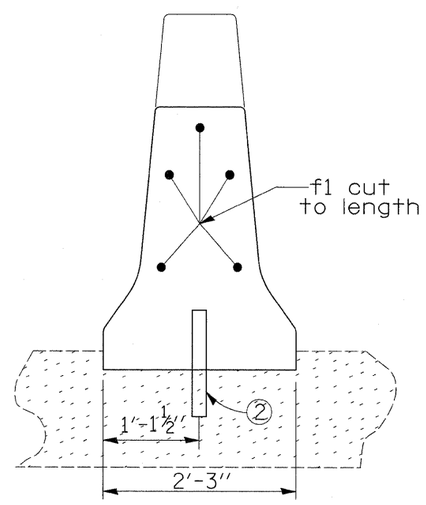

SECTION B–B

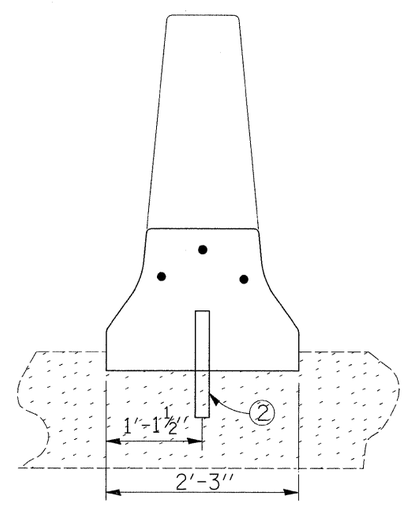

SECTION C–C

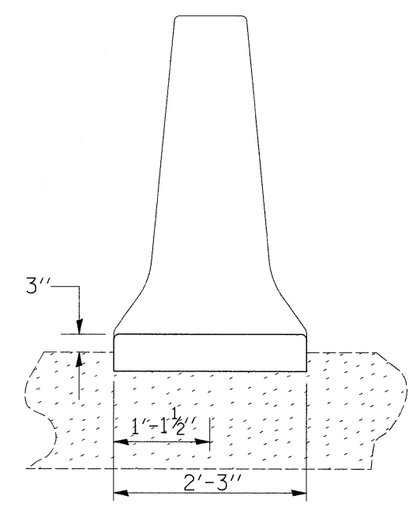

SECTION D–D

2 REVISED SHEET 2-23-09

FILE NAME = c:\pw_work\pwidot\grantpm\dms34287\d08403spl.dgn	USER NAME = grantpm	DESIGNED -	REVISED -	STATE OF ILLINOIS DEPARTMENT OF TRANSPORTATION	CONCRETE MEDIAN BARRIER TAPERED END SECTION	F.A.I RTE.	SECTION	COUNTY	TOTAL SHEETS / SHEET NO.
		DRAWN -	REVISED -			80	(81-1) R-1	ROCK ISLAND	292 / 201
	PLOT SCALE = 100.0000 ' / IN.	CHECKED -	REVISED -					CONTRACT NO. 64933	
	PLOT DATE = Wed Feb 11 14:51:09 2009	DATE -	REVISED -		SCALE: SHEET NO. OF SHEETS STA. TO STA.	FED. ROAD DIST. NO.	ILLINOIS	FED. AID PROJECT	