ROUTE NO.	SECTION	COUNTY	TOTAL SHEETS	SHEET NO.
F.A.U. 6757 (U.S. 150)	(105B)BR-2	TAZEWELL	133	61
FED. ROAD DIST. NO. 7		ILLINOIS	FED. AID PROJECT-	

SHEET NO. 11
18 SHEETS

CONTRACT NO. 68086

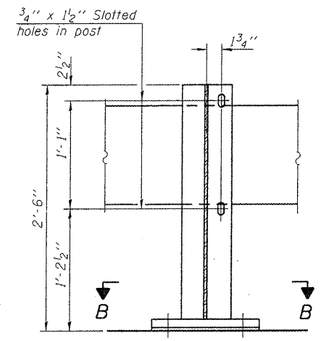

SECTION A-A

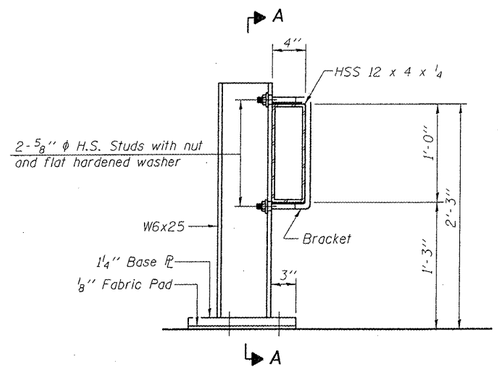

SECTION AT RAIL POST

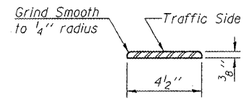

DETAIL A

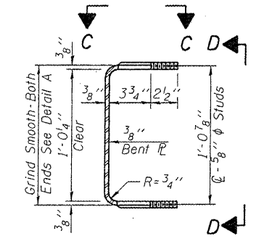

SECTION THRU BRACKET

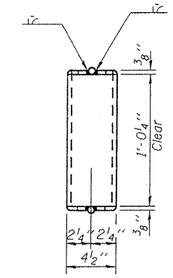

VIEW D-D

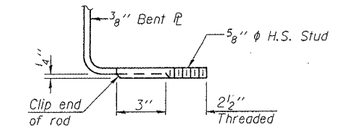

VIEW E-E

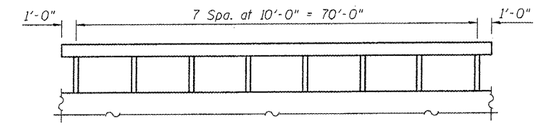

TEMPORARY BRIDGE RAIL POST SPACING

ALTERNATE I

(To be used only for Roadway width ≥12')

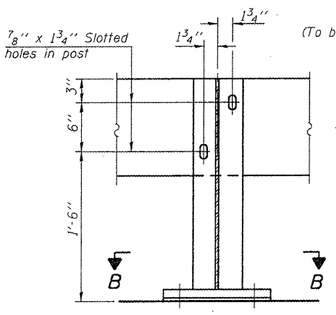

SECTION A-A

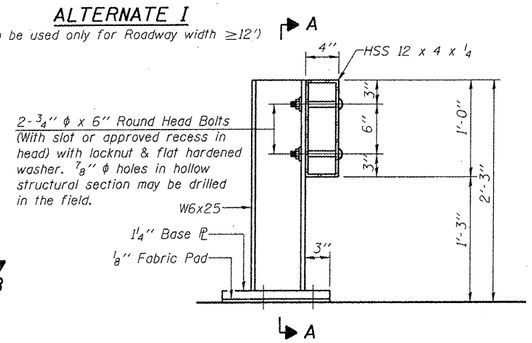

SECTION AT RAIL POST

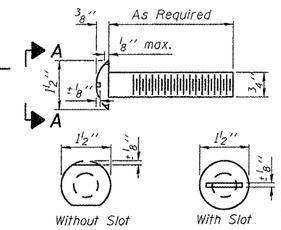

VIEW A-A
ROUND HEAD BOLT

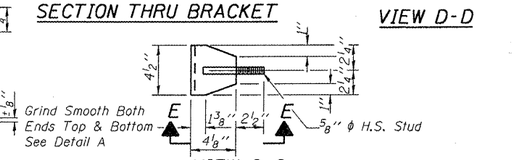

VIEW C-C

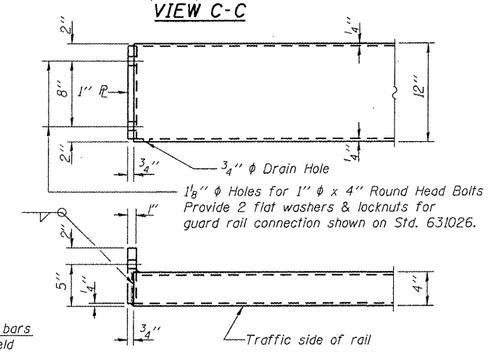

END OF RAIL DETAILS

Notes:

The contact surfaces between post flange, rail and inside face of bracket for Alternate I shall be free of all lubricants.

The nut for 5/8" ϕ high strength studs used in Alternate I to connect bracket to post shall be tightened to a snug fit and given an additional one half turn.

ALTERNATE II

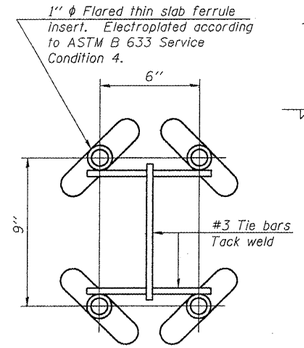

INSERT DETAIL

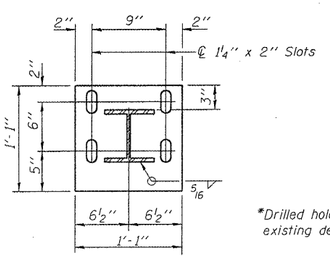

SECTION B-B

*Drilled holes for existing deck.

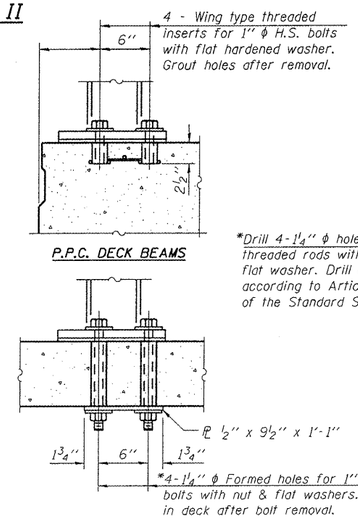

*Drill 4-1 1/4" ϕ holes for 1" ϕ threaded rods with hex nut and flat washer. Drill and set rods according to Article 509.06 of the Standard Specifications.

NEW & EXISTING DECKS

ANCHORAGE DETAILS

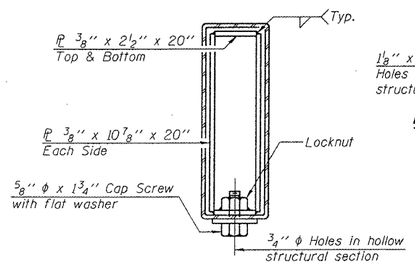

SECTION AT RAIL SPLICE

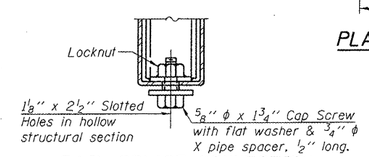

RAIL SPLICE CONNECTION
AT EXPANSION JT.

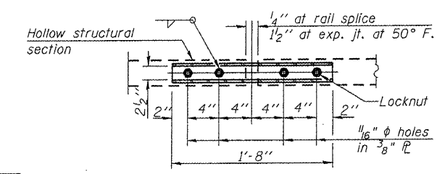

PLAN-BOTT. SPLICE PL
TYPICAL

BILL OF MATERIAL

Item	Unit	Quantity
Steel Railing (Temporary)	Foot	72

R-25 9-3-07 (10'-9" Maximum Post Spacing)

LIN ENGINEERING, LTD.
Consulting Engineers
Chatham, Illinois

Designed By: RKM | Checked By: MTH | Drawn By: ADB
Date: 08/2007 | File: 090-0175.DGN

REVISIONS	
NAME	DATE

ILLINOIS DEPARTMENT OF TRANSPORTATION

STEEL RAILING (TEMPORARY)
U.S. ROUTE 150 OVER
LITTLE FARM CREEK
F.A.U. ROUTE 6757 SECTION (105B)BR-2
TAZEWELL COUNTY
STA. 49+20.43
S.N. 090-0175

$FILEABBREV$
$TIME$
$DATE$