NOTE: PIPE UNDERDRAINS 4" SHALL BE EXTENDED TO FLOW LINE OR NEAREST INLET. THE PIPE UNDERDRAIN HEADWALLS AND HEADWALL REMOVALS SHALL BE INCIDENTAL TO PIPE UNDERDRAINS 4".

LIGHT FOUNDATION
AT STA. 380+00.00

PIPE CULVERTS, TYPE 1 CORRUGATED STEEL OR ALUMINUM CULVERT PIPE, 15"
STATION 378+00.00 TO STATION 382+00.00
PIPE CENTERED AT 4'-0" RT.

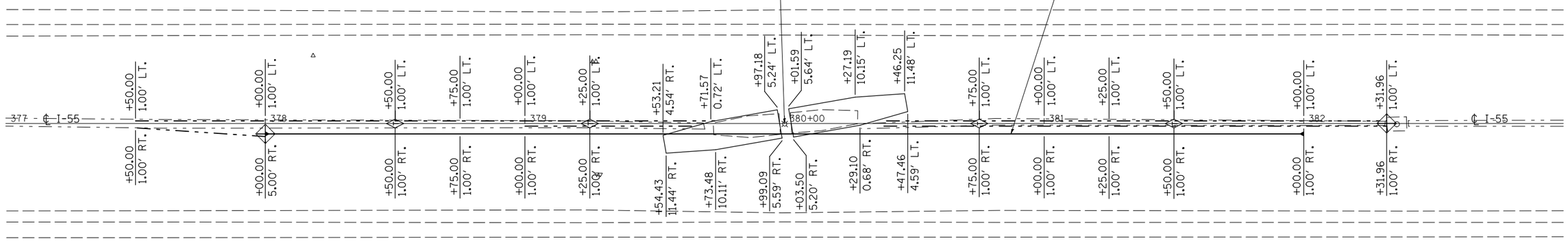

1"=20'
0' 5' 10' 15' 20' 40' 60'

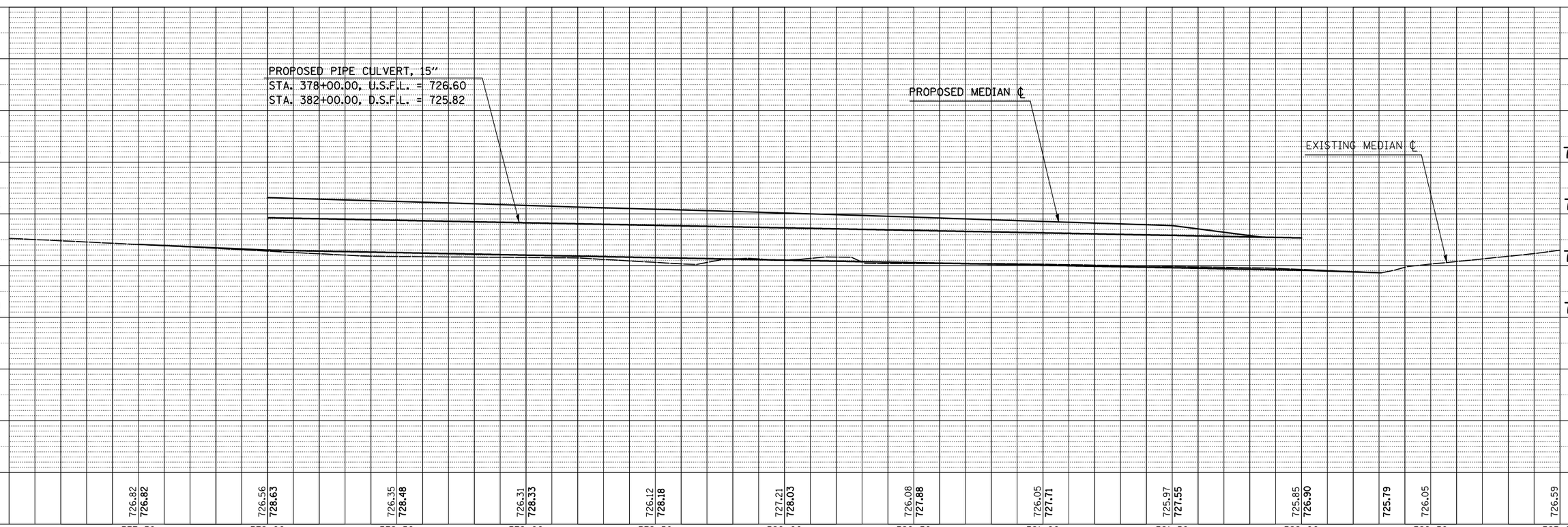

PLAN	BY	DATE
SURVEYED		
PLOTTED		
ALIGNMENT CHECKED		
RT. OF WAY CHECKED		
CADD FILE NAME		
NOTE BOOK NO.		

PROFILE	BY	DATE
SURVEYED		
PLOTTED		
GRADES CHECKED		
B.M. NOTED		
STRUCTURE NOTAT'NS CHK'D		
NOTE BOOK NO.		

FILE NAME = c:\pw_work\PWIDOT\PIERSONBR\d0101466\d570745-sht-plnprf.dgn	USER NAME = piersonbr	DESIGNED - MLB
	PLOT SCALE = 40.0000 ' / IN.	DRAWN - BBP
	PLOT DATE = 12/16/2008	CHECKED -
		DATE - 12/09/08
		REVISED -
		REVISED -
		REVISED -
		REVISED -

STATE OF ILLINOIS
DEPARTMENT OF TRANSPORTATION

PLAN & PROFILE FOR LIGHT FOUNDATION AT STA. 380+00.00

SCALE: 1" = 20' | SHEET NO. 1 OF 1 SHEETS | STA. 377+00.00 TO STA. 383+00.00

F.A.I RTE.	SECTION	COUNTY	TOTAL SHEETS	SHEET NO.
55	D5Safety-2	McLean	79	36
		CONTRACT NO. 70745		
FED. ROAD DIST. NO.	ILLINOIS	FED. AID PROJECT		