ROUTE NO.	SECTION	COUNTY	TOTAL SHEETS	SHEET NO.
F.A.I. 55	68-4B-1	MONTGOMERY	145	55
FED. RD. DIST. NO. 7	ILLINOIS	FED. AID PROJECT-		

SHEET NO. 15
23 SHEETS

Contract #72A63

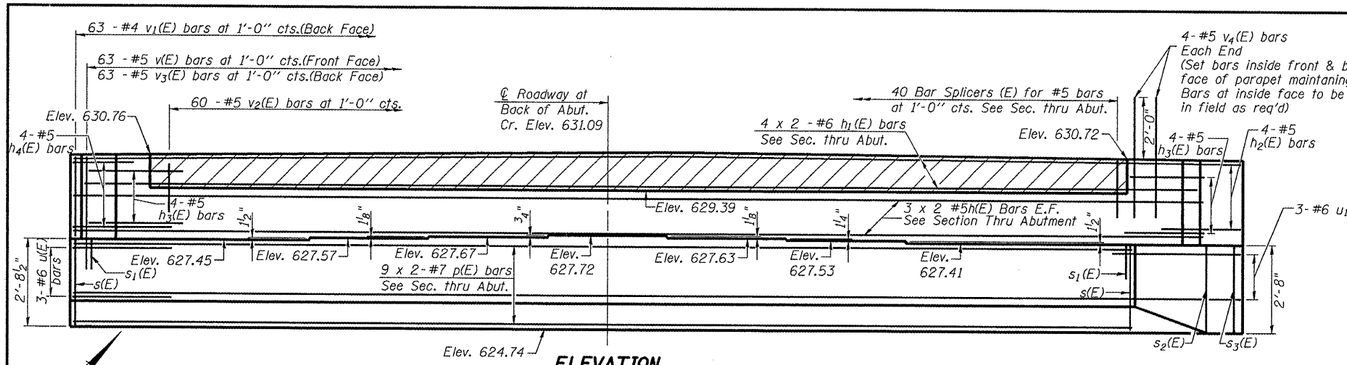

ELEVATION

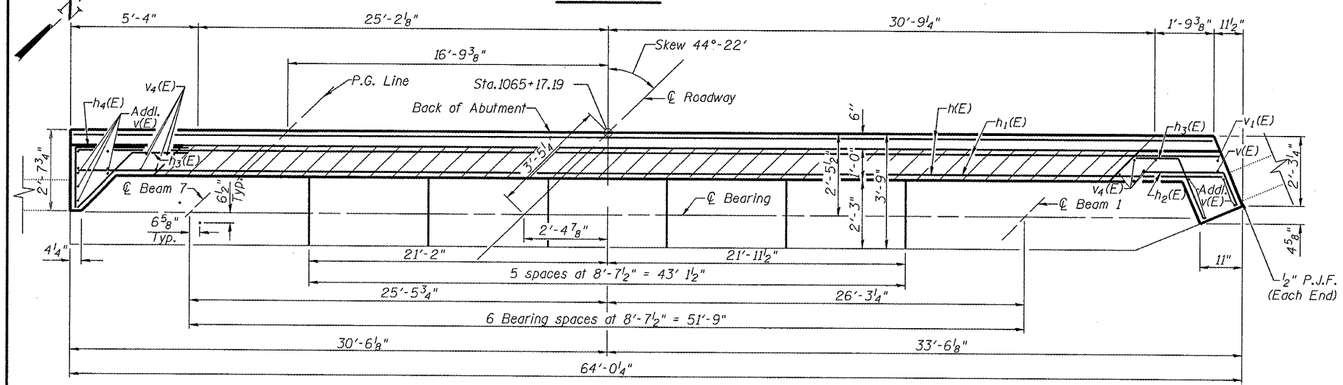

TOP VIEW

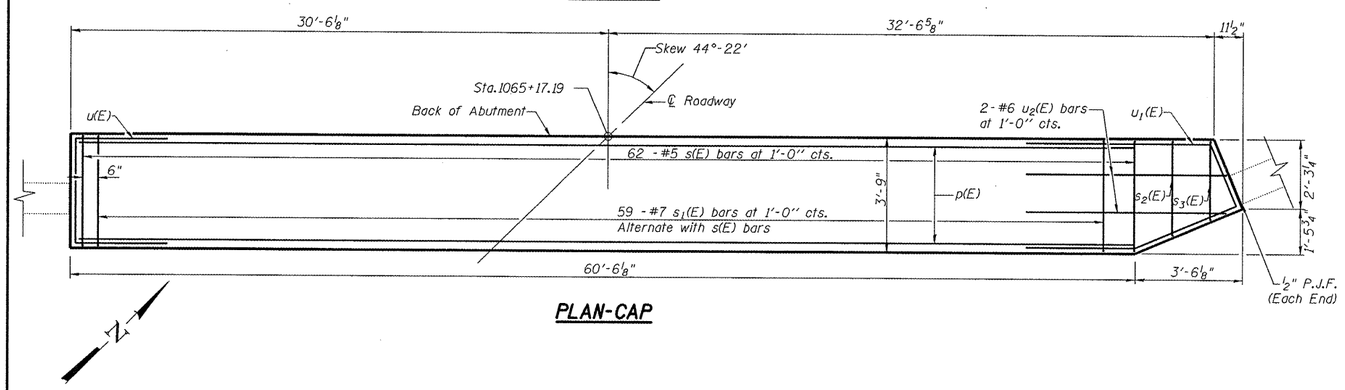

PLAN-CAP

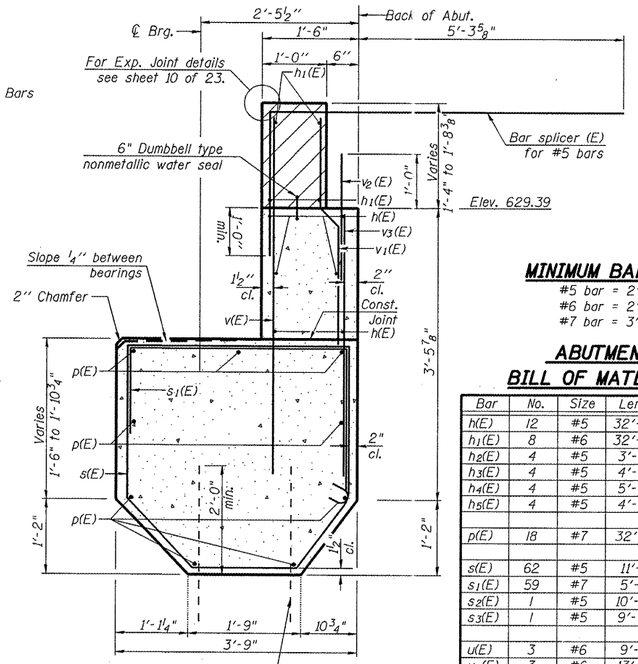

Existing reinforcement shall be cleaned and incorporated into the new construction. Cost included with Concrete Removal.

SEC. THRU ABUT.

MINIMUM BAR LAP

#5 bar = 2'-5"
#6 bar = 2'-10"
#7 bar = 3'-10"

ABUTMENT BILL OF MATERIAL

Bar	No.	Size	Length	Shape
h(E)	12	#5	32'-7"	
h1(E)	8	#6	32'-10"	
h2(E)	4	#5	3'-3"	
h3(E)	4	#5	4'-5"	
h4(E)	4	#5	5'-4"	
h5(E)	4	#5	4'-11"	
p(E)	18	#7	32'-11"	
s(E)	62	#5	11'-1"	
s1(E)	59	#7	5'-9"	
s2(E)	1	#5	10'-4"	
s3(E)	1	#5	9'-7"	
u(E)	3	#6	9'-0"	
u1(E)	3	#6	13'-11"	
u2(E)	2	#6	13'-3"	
v(E)	71	#5	5'-4"	
v1(E)	63	#4	3'-6"	
v2(E)	60	#5	2'-0"	
v3(E)	63	#5	3'-1"	
v4(E)	8	#5	4'-0"	
Structure Excavation			Cu. Yd.	50
Concrete Structures			Cu. Yd.	33
Reinforcement Bars, Epoxy Coated			Pound	4590
Bar Splicers			Each	40
Concrete Sealer			Sq. Ft.	584

For details of Bar Splicers, see sheet 13 of 23.
Bars indicated thus 9x2-#7 etc. indicates 9 lines of bars with 2 lengths per line.

Notes:

Hatched area to be poured after superstructure false work has been removed. Quantity of concrete included with Concrete Superstructure.

Space reinforcement in cap to miss anchor bolts.

Pour steps monolithically with cap.

All exposed corners shall have a ¾" chamfer (typ.)

The bar splicer is to be placed parallel to the approach pavement reinforcement.

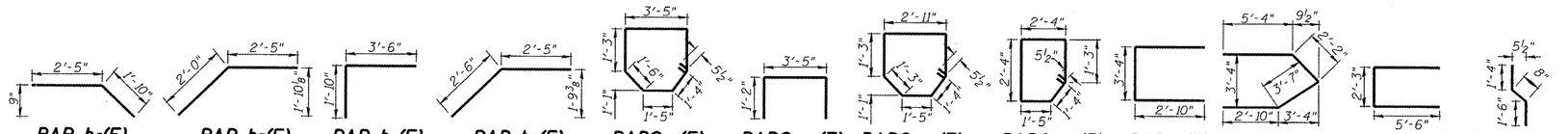

BAR h2(E) BAR h3(E) BAR h4(E) BAR h5(E) BARS s(E) BARS s1(E) BARS s2(E) BARS s3(E) BAR u(E) BAR u1(E) BARS u2(E) BAR v1(E)

Rev. 2-17-09

ILLINOIS DEPARTMENT OF TRANSPORTATION

NORTHBOUND NORTH ABUTMENT DETAILS
I 55 OVER MACOUPIN CREEK
F.A.I. ROUTE 55 - SEC. 68-4B-1
MONTGOMERY COUNTY
STATION 1066+03.18
STRUCTURE NO. 068-0038 N.B.
STRUCTURE NO. 068-0039 S.B.

DATE: 04-08 DRAWN BY: MLO
REVISED: CHECKED BY: PBB

BLANK, WESSELINK, COOK & ASSOCIATES ENGINEERS - CONSULTANTS DECATUR, ILLINOIS DESIGN FIRM NO. 184000894