ROUTE NO.	SECTION	COUNTY	TOTAL SHEETS	SHEET NO.
- -	***	BOND	99	63
FED. ROAD DIST. NO. 7	ILLINOIS	FED. AID PROJECT-		

SHEET NO. 25
30 SHEETS

Contract #97366

***99-00036-00-BR

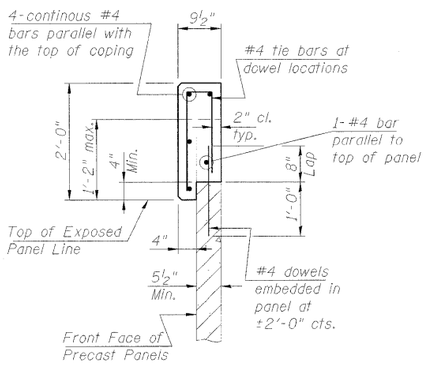

TYPICAL VERTICAL COPING SECTION ALONG ABUTMENT FACE

Notes:
Dimensions are based on a M.S.E. minimum Wall thickness of 5½". If the Contractor elects to use a wall supplier with thicker wall units, the dimensions will require adjustment.

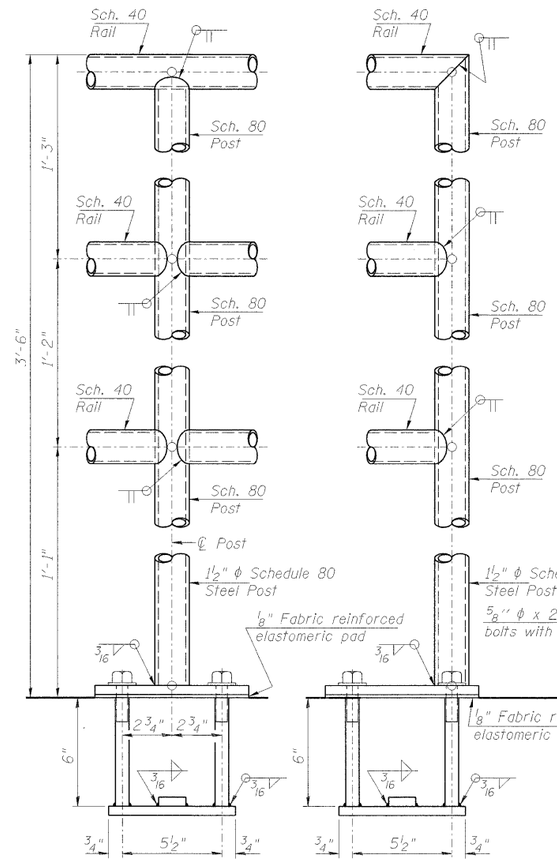

TYPICAL LINE POST

END POST NEAR BRIDGE PARAPET

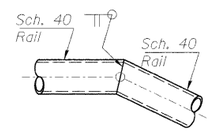

RAIL SLOPE TRANSITION

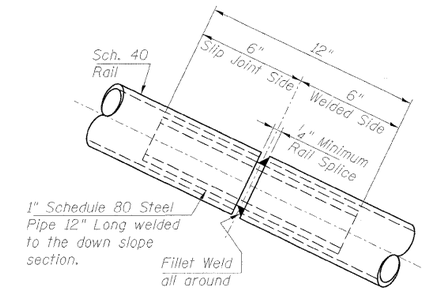

RAIL SPLICE

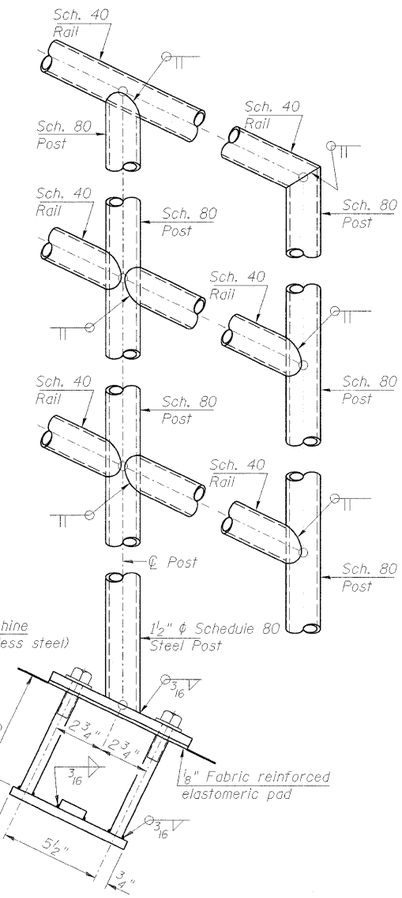

LEVEL RAIL ANCHORAGES

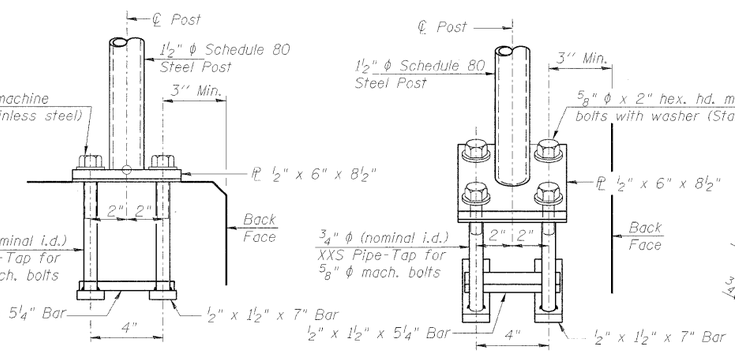

ANCHOR BOLT DETAILS

In lieu of the cast-in-place anchor device shown, the Contractor has the option of drilling and setting ⅝" ϕ anchor rods according to Article 509.06 of the Standard Specifications. Embedment shall be according to the manufacturer's specifications.

All steel rail elements shall be galvanized according to Article 509.05 of the Standard Specifications.

SLOPED RAIL ANCHORAGES

BILL OF MATERIAL

Item	Unit	Total
Pipe Handrail	Foot	289

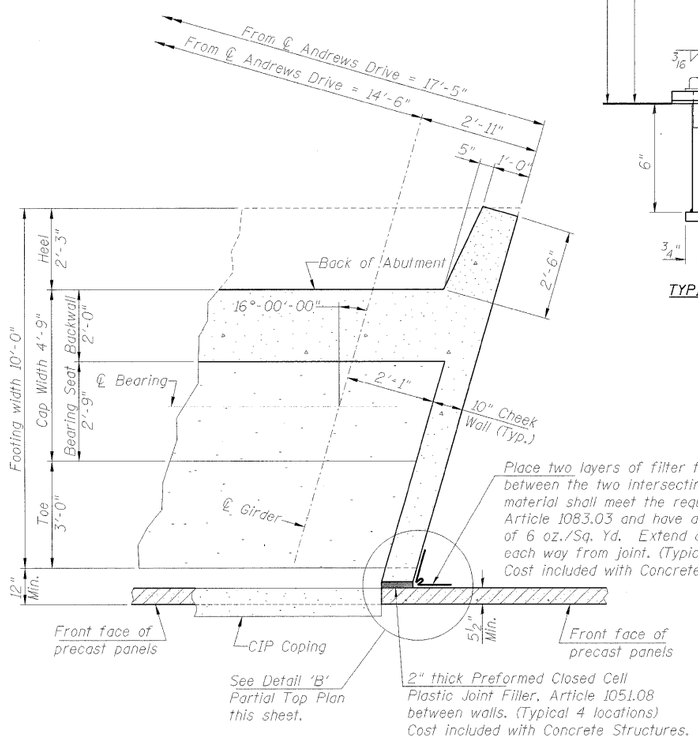

PARTIAL HORIZONTAL SECTION D-D

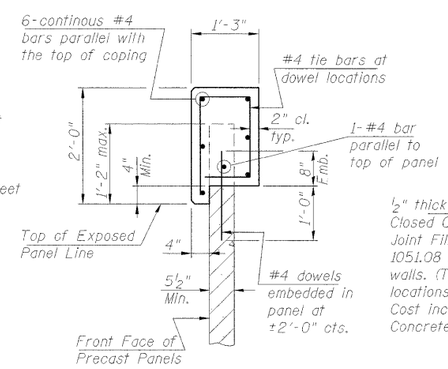

TYPICAL VERTICAL COPING SECTION ALONG SLOPED WALLS

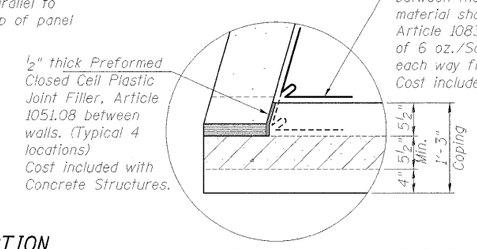

DETAIL 'B' - PARTIAL TOP PLAN

MSE WALL DETAILS (Sheet 2)
ANDREWS DRIVE over
U.S. ROUTE 40 ; CSX RR and IL. WESTERN RR
SEC. 99-00036-00-BR
STR. NO. 003-6000
CITY of GREENVILLE
BOND COUNTY
STATION 117+73.00

PROFESSIONAL DESIGN FIRM LICENSE #184-001084

© Copyright Hanson Professional Services Inc. 2008

HANSON
Hanson Professional Services Inc.

JOB NO. 04S2012
DATE 12/10/08

LAYOUT	MRM	10/20/08
DRAWN	RGC	10/20/08
REVIEWED	RGC	10/22/08

12:23\2008
I:\04Jobs\04S2012\CADD\Struct\Sheet\MSE DETAILS Sheet 2.dgn