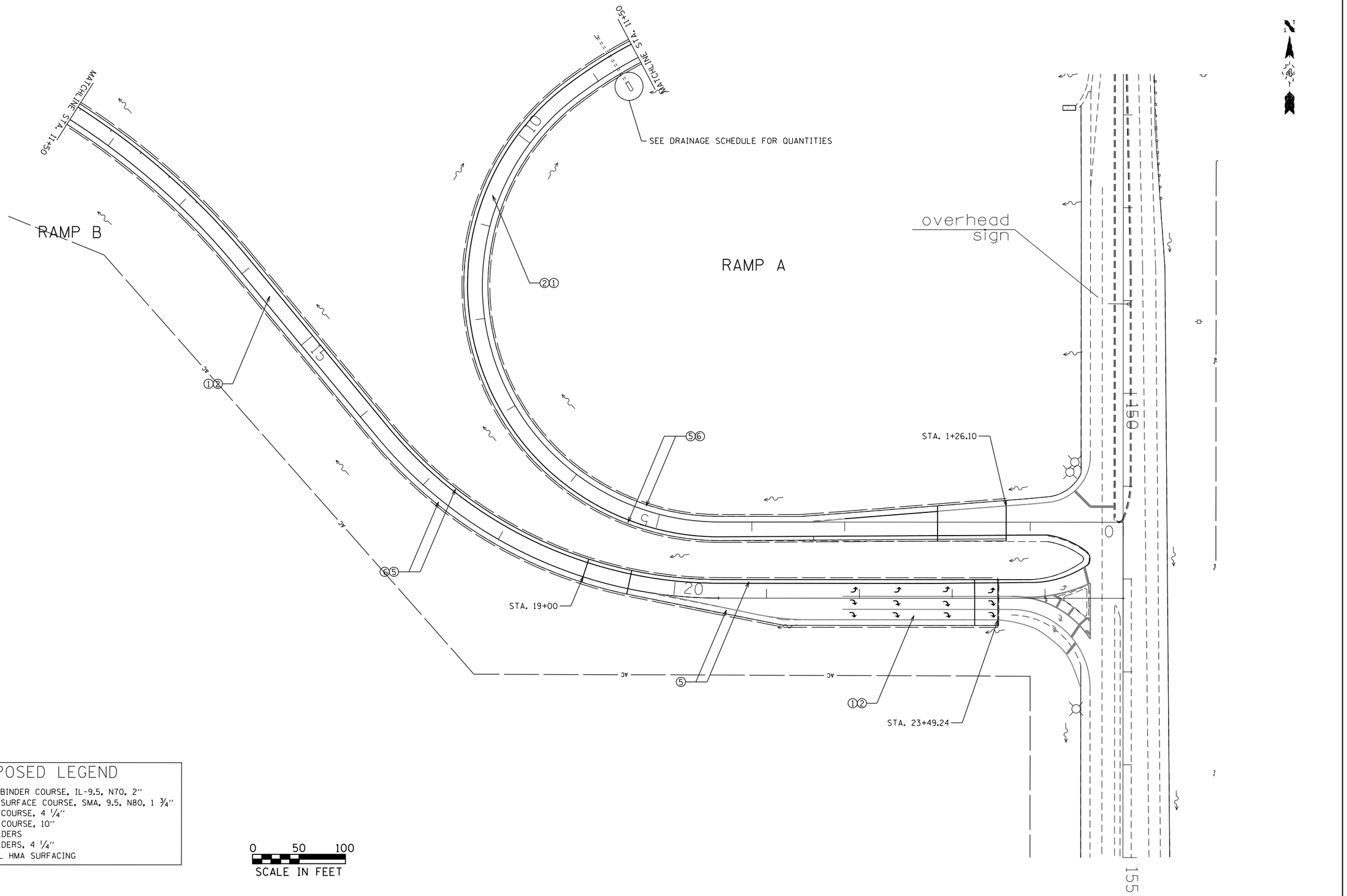

PROPOSED LEGEND

① POLY HMA BINDER COURSE, IL-9.5, N70, 2″
② POLY HMA SURFACE COURSE, SMA, 9.5, N80, 1 ¾″
③ HMA BASE COURSE, 4 ¼″
④ HMA BASE COURSE, 10″
⑤ HMA SHOULDERS
⑥ HMA SHOULDERS, 4 ¼″
⑦ INCIDENTAL HMA SURFACING

0 50 100
SCALE IN FEET

MODEL: Default
FILE NAME: pw:\\ahnroom.dot\Illinois.gov:PWIDOT\Documents\IDOT Offices\District 4\Projects\D4 68C98\CADData\CADSheets\PROPOSED

USER NAME = $USER$	DESIGNED -	REVISED -	
	DRAWN -	REVISED -	
PLOT SCALE = 1:100	CHECKED -	REVISED -	
PLOT DATE = 12/16/2019	DATE -	REVISED -	

STATE OF ILLINOIS
DEPARTMENT OF TRANSPORTATION

PROPOSED PLAN & DRAINAGE
ALLEN INTERCHANGE: RAMPS A & B

SCALE: | SHEET 14 OF 16 SHEETS | STA. | TO STA.

F.A.P. RTE.	SECTION	COUNTY	TOTAL SHEETS	SHEET NO.
318		PEORIA	180	101
		CONTRACT NO. 68C98		
	ILLINOIS	FED. AID PROJECT		

72[(7,7-1,6-1)RS-2(7-2,3)RS]

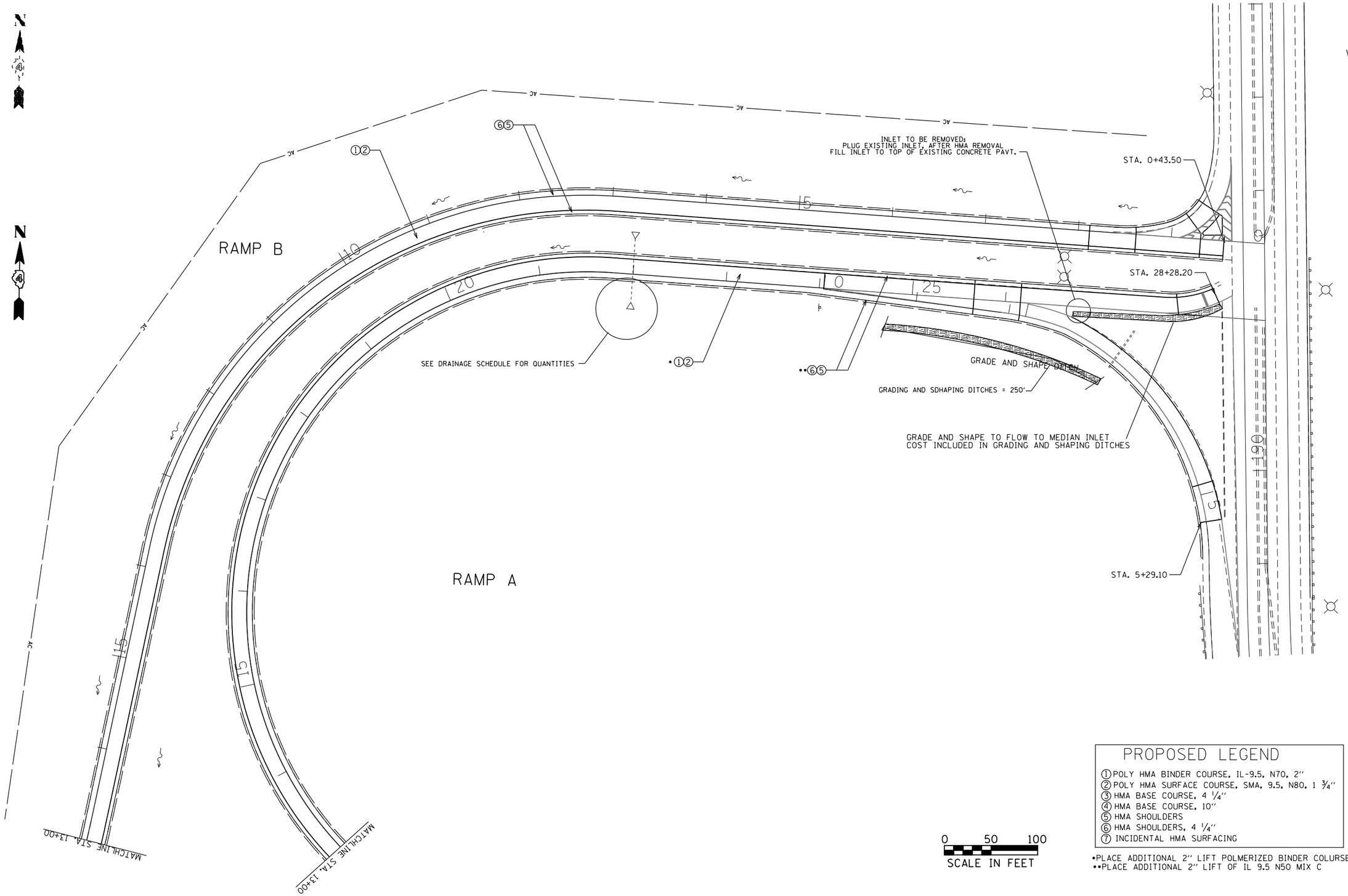

PROPOSED LEGEND

① POLY HMA BINDER COURSE, IL-9.5, N70, 2''
② POLY HMA SURFACE COURSE, SMA, 9.5, N80, 1 ¾''
③ HMA BASE COURSE, 4 ¼''
④ HMA BASE COURSE, 10''
⑤ HMA SHOULDERS
⑥ HMA SHOULDERS, 4 ¼''
⑦ INCIDENTAL HMA SURFACING

0 50 100
SCALE IN FEET

•PLACE ADDITIONAL 2'' LIFT POLMERIZED BINDER COLURSE, IL-9.5 N70
••PLACE ADDITIONAL 2'' LIFT OF IL 9.5 N50 MIX C

MODEL: Default
FILE NAME: pw:\\dlanroom.dot.illinois.gov:PWIDOT1Documents\IDOT Offices\District 4\Projects\D4 68C98\CAD\Data\CAD\sheets\PROPOSED

USER NAME = $USER$	DESIGNED -	REVISED -	
	DRAWN -	REVISED -	
PLOT SCALE = 1:100	CHECKED -	REVISED -	
PLOT DATE = 12/16/2019	DATE -	REVISED -	

STATE OF ILLINOIS
DEPARTMENT OF TRANSPORTATION

PROPOSED PLAN & DRAINAGE
KNOXVILLE INTERCHANGE: RAMPS A & B

SCALE: | SHEET 15 OF 16 SHEETS | STA. | TO STA.

F.A.P. RTE.	SECTION	COUNTY	TOTAL SHEETS	SHEET NO.
318		PEORIA	180	102
		CONTRACT NO. 68C98		
	ILLINOIS	FED. AID PROJECT		

72[(7,7-1,6-1)RS-2(7-2,3)RS]

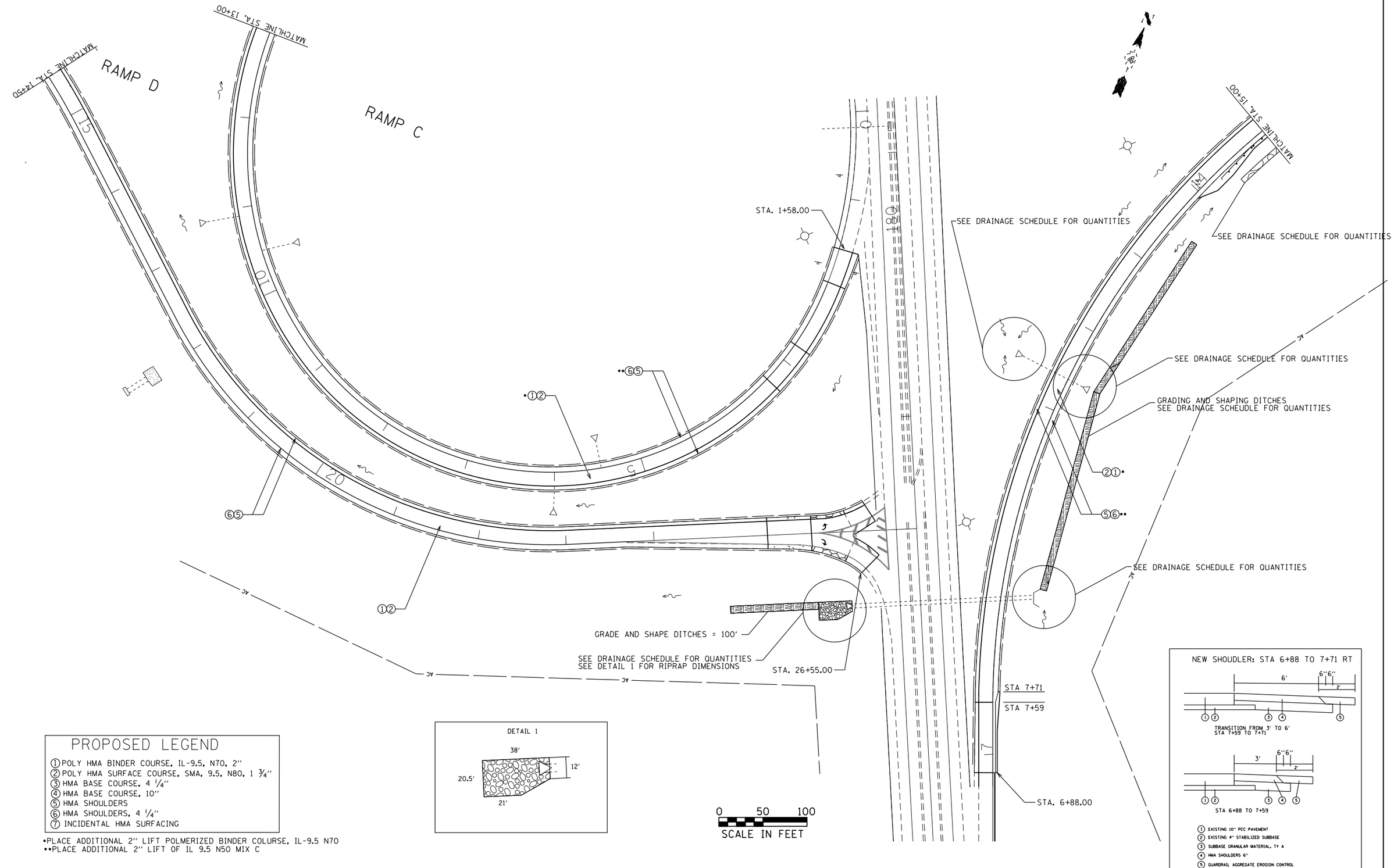

PROPOSED LEGEND

1. POLY HMA BINDER COURSE, IL-9.5, N70, 2"
2. POLY HMA SURFACE COURSE, SMA, 9.5, N80, 1 3/4"
3. HMA BASE COURSE, 4 1/4"
4. HMA BASE COURSE, 10"
5. HMA SHOULDERS
6. HMA SHOULDERS, 4 1/4"
7. INCIDENTAL HMA SURFACING

•PLACE ADDITIONAL 2" LIFT POLMERIZED BINDER COLURSE, IL-9.5 N70
••PLACE ADDITIONAL 2" LIFT OF IL 9.5 N50 MIX C

MODEL: Default
FILE NAME: pw:\\planroom.dot.illinois.gov:PWIDOT\Documents\IDOT Offices\District 4\Projects\D4_68C98\CADData\CADsheets\PROPOSED

USER NAME = $USER$	DESIGNED -	REVISED -	
	DRAWN -	REVISED -	
PLOT SCALE = 1:100	CHECKED -	REVISED -	
PLOT DATE = 12/16/2019	DATE -	REVISED -	

STATE OF ILLINOIS
DEPARTMENT OF TRANSPORTATION

PROPOSED PLAN & DRAINAGE
KNOXVILLE INTERCHANGE: RAMPS C, D & E

SCALE: | SHEET 16 OF 16 SHEETS | STA. | TO STA.

F.A.P. RTE.	SECTION	COUNTY	TOTAL SHEETS	SHEET NO.
318		PEORIA	180	103
		CONTRACT NO. 68C98		
		ILLINOIS	FED. AID PROJECT	

72[(7,7-1,6-1)RS-2(7-2,3)RS]

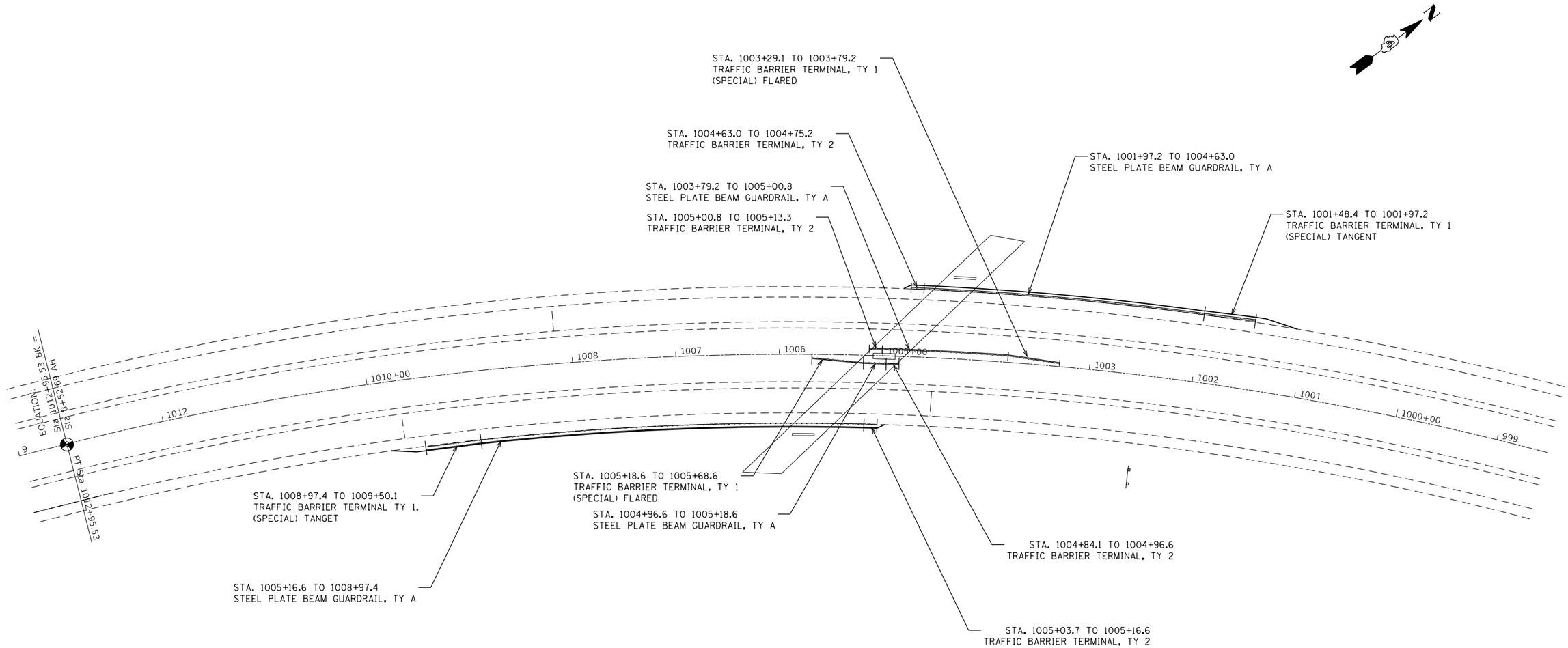

MODEL: Default
FILE NAME: p:\planroom.dot.illinois.gov\PWIDOT\Documents\IDOT Offices\District 4\Projects\D4_68C98\CADD\stat\CAD\sheets\GUARDRAIL

USER NAME = $USER$	DESIGNED -	REVISED -	
	DRAWN -	REVISED -	
PLOT SCALE = 1:100	CHECKED -	REVISED -	
PLOT DATE = 12/16/2019	DATE -	REVISED -	

STATE OF ILLINOIS
DEPARTMENT OF TRANSPORTATION

PROPOSED GUARDRAIL SHEETS

SCALE: | SHEET 1 OF 5 SHEETS | STA. | TO STA.

F.A.P. RTE.	SECTION	COUNTY	TOTAL SHEETS	SHEET NO.
318		PEORIA	180	104
		CONTRACT NO. 68C98		
	ILLINOIS	FED. AID PROJECT		

72[(7,7-1,6-1)RS-2(7-2,3)RS]

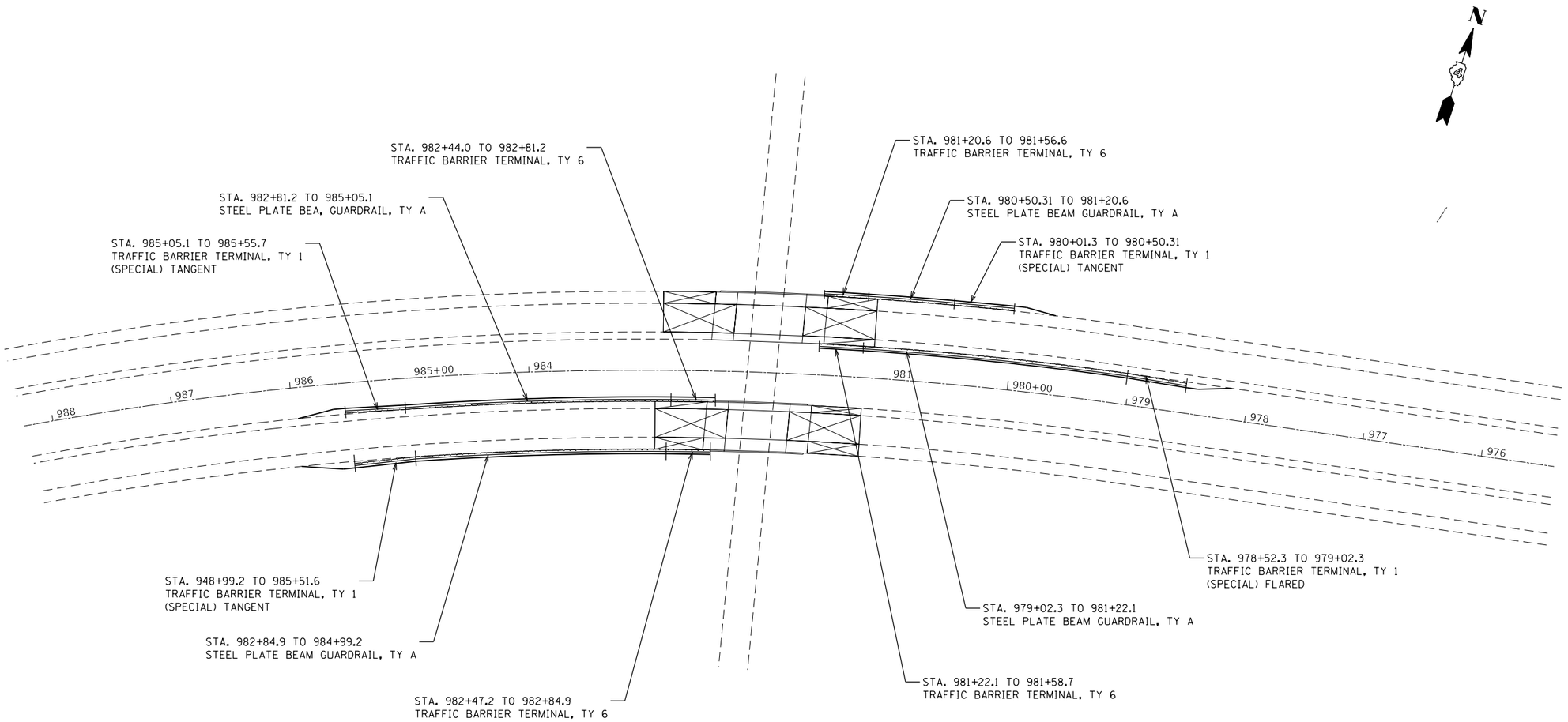

MODEL: Default
FILE NAME: pw:\\danroom.dot.illinois.gov:PWIDOT\Documents\IDOT Office\District 4\Projects\D4 68C98\CADData\CAD\sheets\GUARDRAIL

USER NAME = $USER$	DESIGNED -	REVISED -	**STATE OF ILLINOIS** **DEPARTMENT OF TRANSPORTATION**
	DRAWN -	REVISED -	
PLOT SCALE = 1:100	CHECKED -	REVISED -	
PLOT DATE = 12/16/2019	DATE -	REVISED -	

PROPOSED GUARDRAIL SHEETS

SCALE: | SHEET 2 OF 5 SHEETS | STA. | TO STA.

F.A.P. RTE.	SECTION	COUNTY	TOTAL SHEETS	SHEET NO.
318		PEORIA	180	105
		CONTRACT NO. 68C98		
	ILLINOIS	FED. AID PROJECT		

72[(7,7-1,6-1)RS-2(7-2,3)RS]

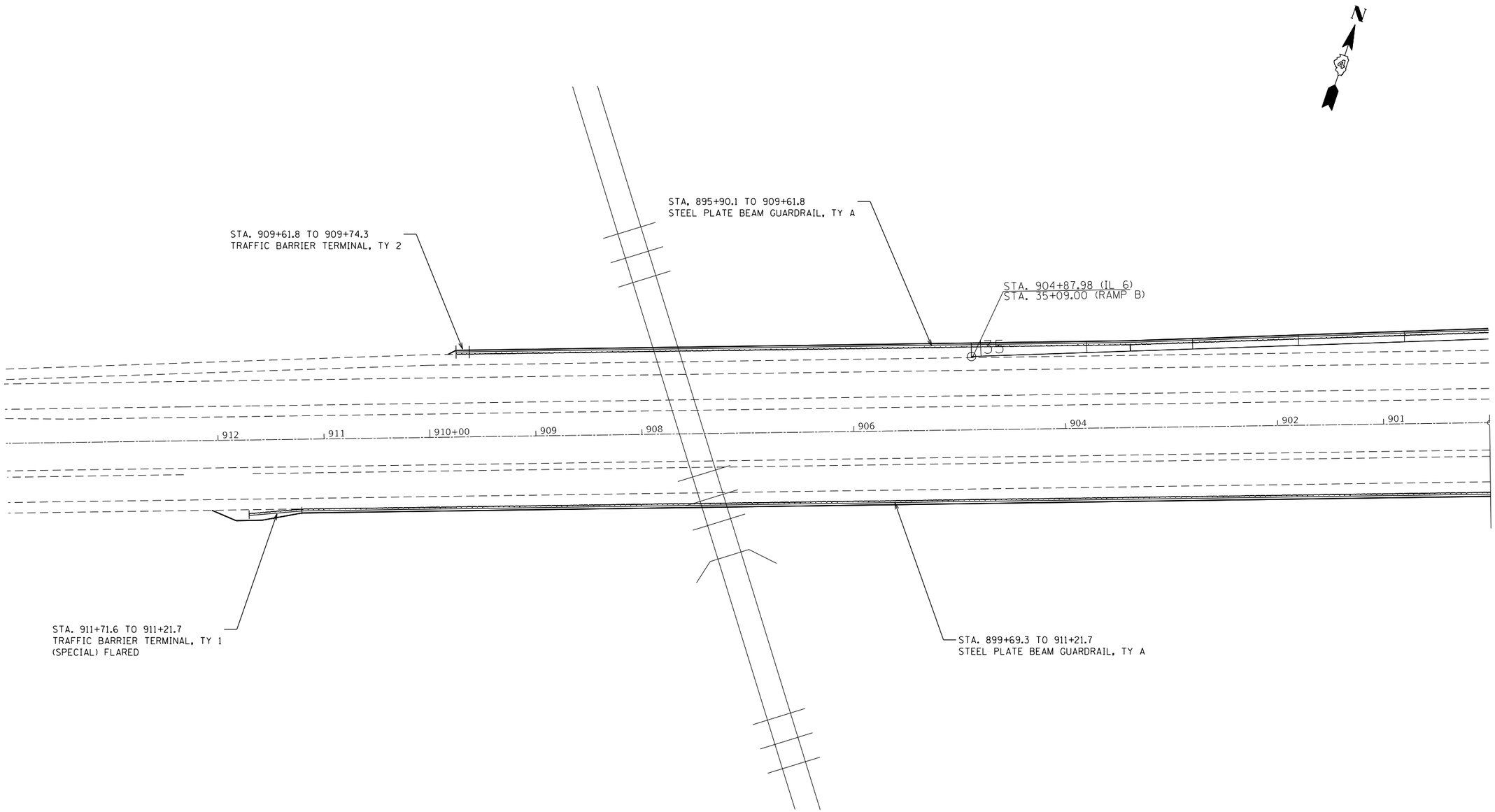

MODEL: Default
FILE NAME: pw:\\dalroom.dot.illinois.gov:PWIDOT\Documents\IDOT Offices\District 4\Projects\D4 68C98\CADData\CADsheets\GUARDRAIL

USER NAME = $USER$	DESIGNED -	REVISED -	
	DRAWN -	REVISED -	
PLOT SCALE = 1:100	CHECKED -	REVISED -	
PLOT DATE = 12/16/2019	DATE -	REVISED -	

STATE OF ILLINOIS
DEPARTMENT OF TRANSPORTATION

PROPOSED GUARDRAIL SHEETS

SCALE: | SHEET 3 OF 5 SHEETS | STA. | TO STA.

F.A.P. RTE.	SECTION	COUNTY	TOTAL SHEETS	SHEET NO.
318		PEORIA	180	106
		CONTRACT NO. 68C98		
	ILLINOIS	FED. AID PROJECT		

72[(7,7-1,6-1)RS-2(7-2,3)RS]

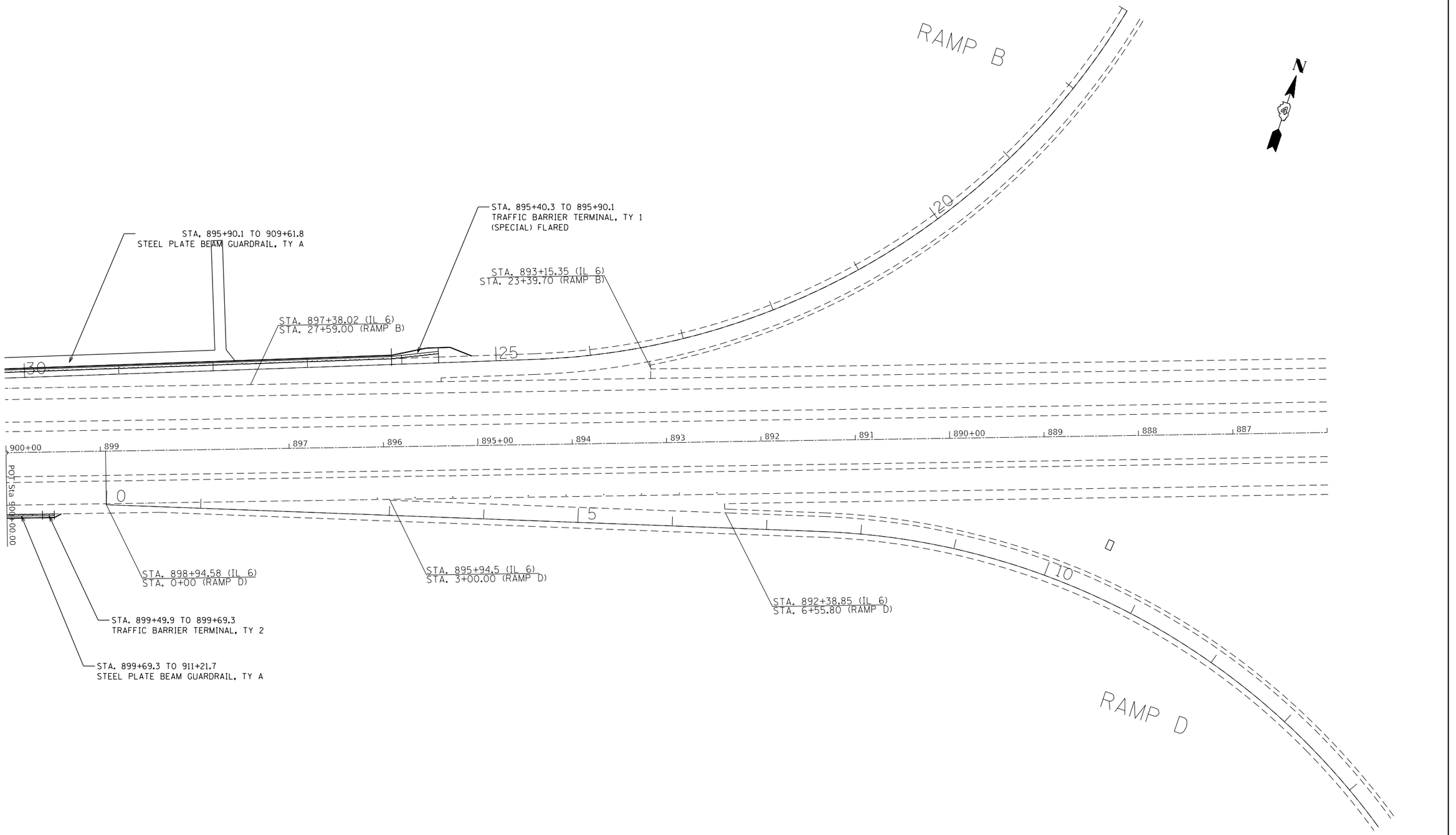

MODEL: Default
FILE NAME: pw:\\ubnroom.dot.illinois.gov:PWIDOT\Documents\IDOT Offices\District 4\Projects\D4 68C98\CADData\CADSheets\GUARDRAIL

USER NAME = $USER$	DESIGNED -	REVISED -	**STATE OF ILLINOIS** **DEPARTMENT OF TRANSPORTATION**
	DRAWN -	REVISED -	
PLOT SCALE = 1:100	CHECKED -	REVISED -	
PLOT DATE = 12/16/2019	DATE -	REVISED -	

PROPOSED GUARDRAIL SHEETS

SCALE: | SHEET 4 OF 5 SHEETS | STA. | TO STA.

F.A.P. RTE.	SECTION	COUNTY	TOTAL SHEETS	SHEET NO.
318		PEORIA	180	107
		CONTRACT NO. 68C98		
	ILLINOIS	FED. AID PROJECT		

72[(7,7-1,6-1)RS-2(7-2,3)RS]

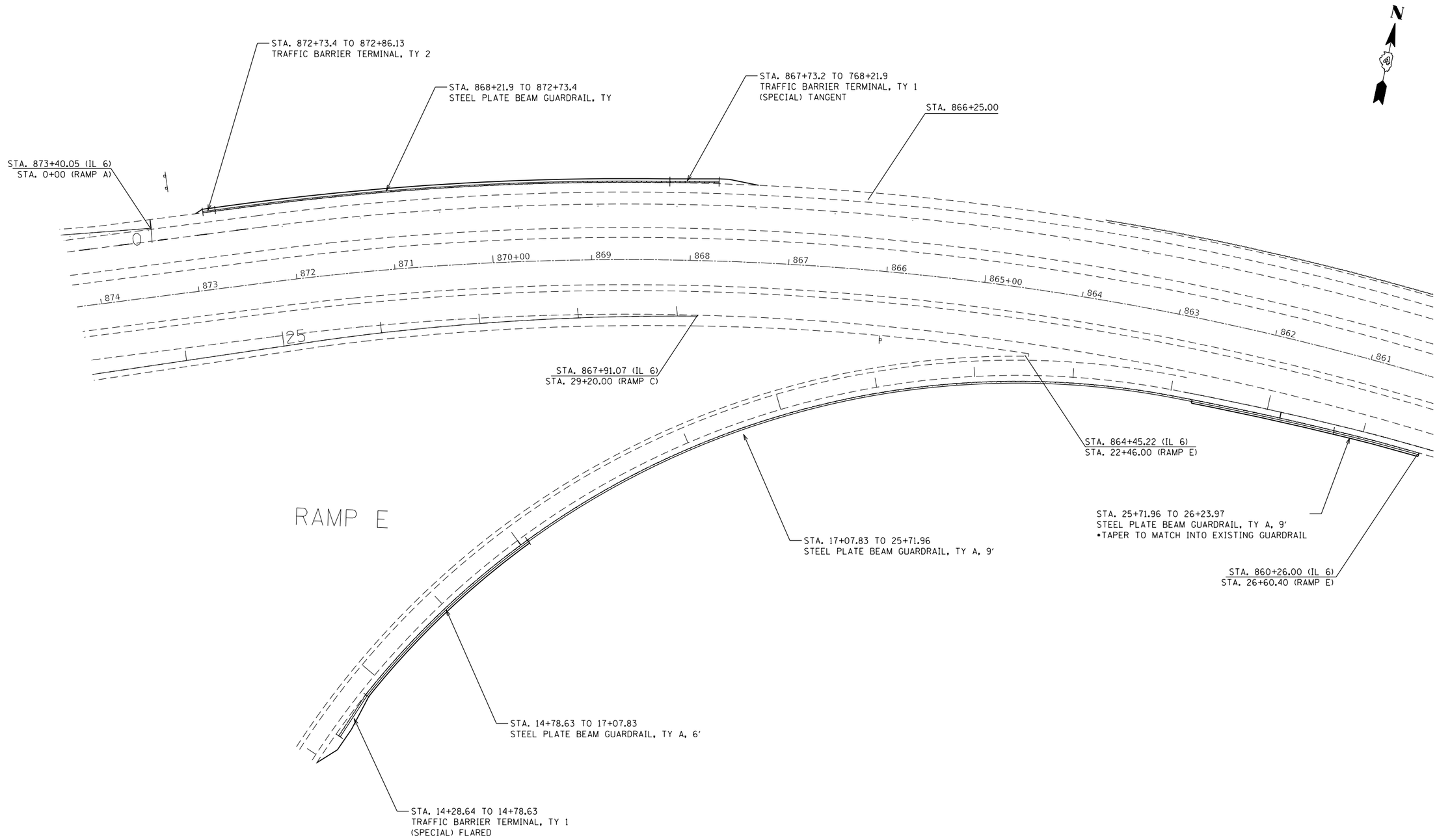

MODEL: Default
FILE NAME: pw:\\planroom.dot.illinois.gov:PWIDOT\Documents\IDOT Offices\District 4\Projects\D4_68C98\CADData\CADsheets\GUARDRAIL

USER NAME = $USER$	DESIGNED -	REVISED -	STATE OF ILLINOIS DEPARTMENT OF TRANSPORTATION
	DRAWN -	REVISED -	
PLOT SCALE = 1:100	CHECKED -	REVISED -	
PLOT DATE = 12/16/2019	DATE -	REVISED -	

PROPOSED GUARDRAIL SHEETS

SCALE: | SHEET 5 OF 5 SHEETS | STA. | TO STA.

F.A.P. RTE.	SECTION	COUNTY	TOTAL SHEETS	SHEET NO.
318		PEORIA	180	108
		CONTRACT NO. 68C98		
		ILLINOIS	FED. AID PROJECT	

72[(7,7-1,6-1)RS-2(7-2,3)RS]

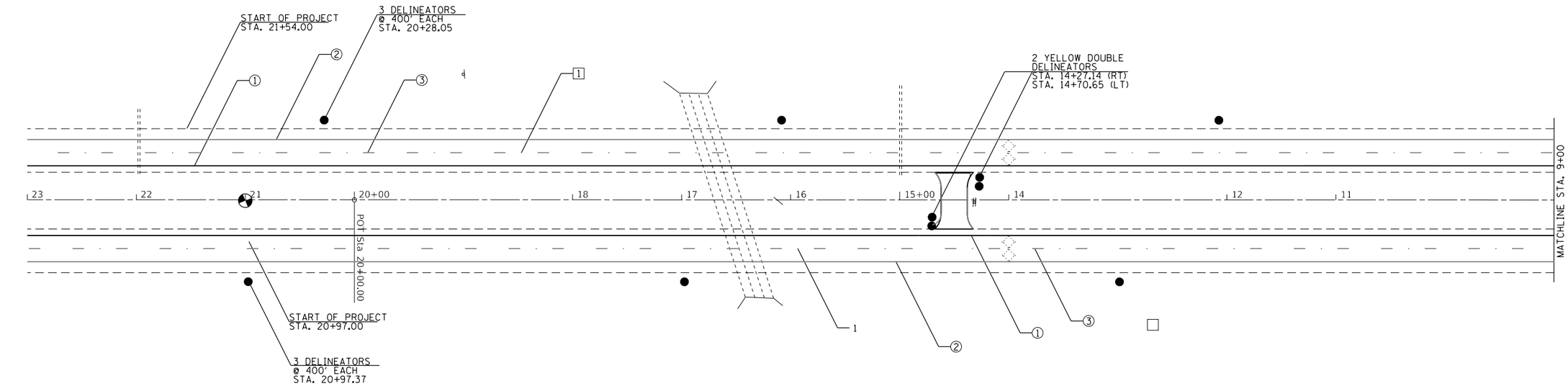

PAVEMENT MARKING LEGEND

1. 4" YELLOW
2. 4" WHITE
3. 6" WHITE SKIP DASH — 10' 30' 10'
4. 8" WHITE SKIP DASH — 3' 9' 3' 9' 3'
5. 8" WHITE
6. 12" WHITE — 45°; 30' (>45 MPH); 20' (<45 MPH)
7. 24' WHITE
8. LETTERS AND SYMBOLS
9. 4" WHITE SKIP DASH — 10' 30' 10'

RAISED REFLECTIVE PAVEMENT MARKERS (RRPM)

1. ◁ ONE-WAY CRYSTAL MARKER AT 80' CENTERS
2. ◁ ONE-WAY CRYSTAL MARKER AT 40' CENTERS
3. ◁ ONE-WAY CRYSTAL MARKER AT 20' CENTERS
4. ◀ ONE-WAY AMBER MARKER AT 40' CENTERS

◁ ONE-WAY CRYSTAL MARKER
◀ ONE-WAY AMBER MARKER

DELINEATORS

RECOVERABLE DELINEATOR

DOUBLE REFLECTOR RECOVERABLE DELINEATOR

10' 30' 10' 30' 10' 30' 10'
80'

▶ ONE WAY YELLOW R.R.P.M.
▷ ONE WAY WHITE R.R.P.M.

MODEL: Default
FILE NAME: pw:\\planroom.dot.illinois.gov:PWIDOT1Documents\IDOT Offices\District 4\Projects\D4_68C98\CAD\Sheets\Final Pavement Markings.dgn

USER NAME = $USER$	DESIGNED -	REVISED -	
	DRAWN -	REVISED -	
PLOT SCALE = 1:100	CHECKED -	REVISED -	
PLOT DATE = 12/16/2019	DATE -	REVISED -	

STATE OF ILLINOIS
DEPARTMENT OF TRANSPORTATION

PROPOSED PAVEMENT MARKINGS

SCALE: | SHEET 1 OF 18 SHEETS | STA. | TO STA.

F.A.P. RTE.	SECTION	COUNTY	TOTAL SHEETS	SHEET NO.
318		PEORIA	180	109
		CONTRACT NO. 68C98		
	ILLINOIS	FED. AID PROJECT		

72[(7,7-1,6-1)RS-2(7-2,3)RS]

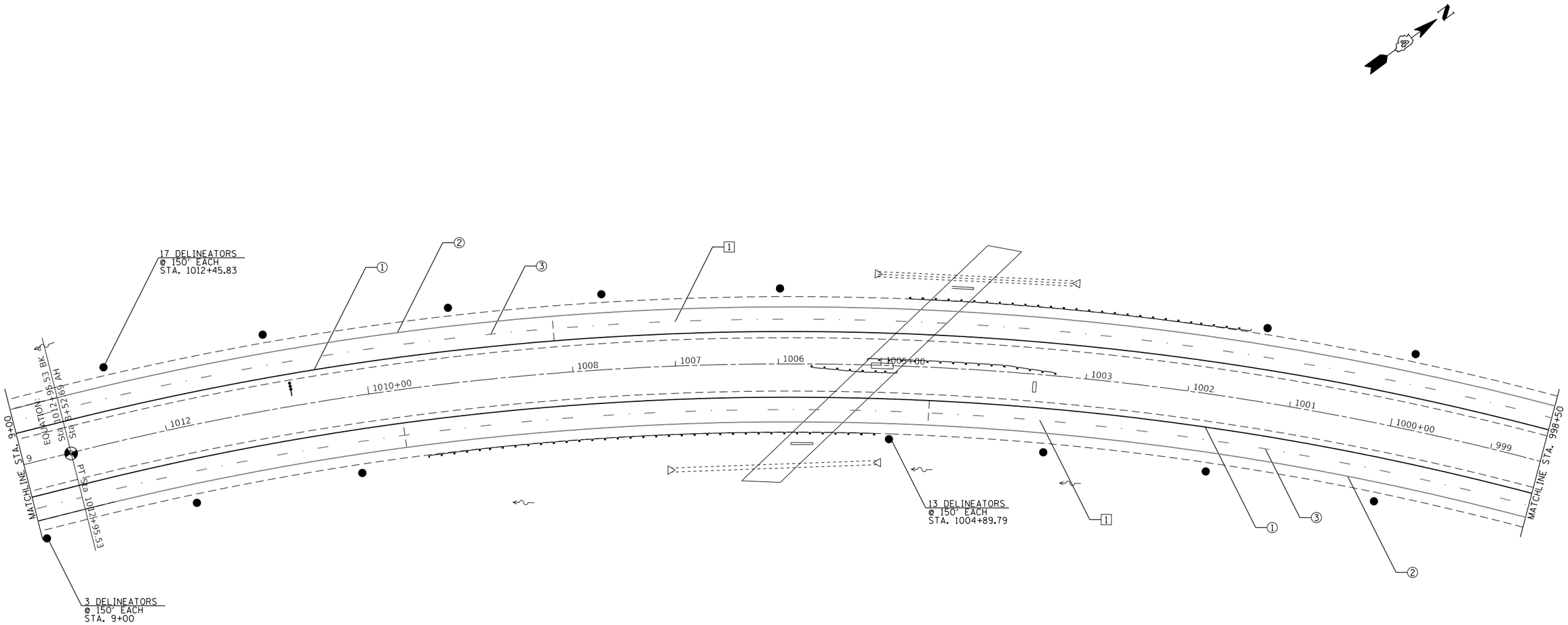

PAVEMENT MARKING LEGEND

1. 4" YELLOW
2. 4" WHITE
3. 6" WHITE SKIP DASH — 10' 30' 10'
4. 8" WHITE SKIP DASH — 3' 9' 3' 9' 3'
5. 8" WHITE
6. 12" WHITE
7. 24' WHITE
8. LETTERS AND SYMBOLS
9. 4" WHITE SKIP DASH — 10' 30' 10'

45° — 30' (>45 MPH) — 20' (<45 MPH)

RAISED REFLECTIVE PAVEMENT MARKERS (RRPM)

1. ◁ ONE-WAY CRYSTAL MARKER AT 80' CENTERS
2. ◁ ONE-WAY CRYSTAL MARKER AT 40' CENTERS
3. ◁ ONE-WAY CRYSTAL MARKER AT 20' CENTERS
4. ◀ ONE-WAY AMBER MARKER AT 40' CENTERS

◁ ONE-WAY CRYSTAL MARKER
◀ ONE-WAY AMBER MARKER

DELINEATORS

RECOVERABLE DELINEATOR

DOUBLE REFLECTOR RECOVERABLE DELINEATOR

10' 30' 10' 30' 10' 30' 10'
80'

▶ ONE WAY YELLOW R.R.P.M.
▷ ONE WAY WHITE R.R.P.M.

MODEL: Default
FILE NAME: pw:\\planroom.dot.illinois.gov:PWIDOT\Documents\IDOT Offices\District 4\Projects\D4_68C98\CADData\CADsheets\Final Pavement Markings.dgn

USER NAME = $USER$	DESIGNED -	REVISED -	STATE OF ILLINOIS DEPARTMENT OF TRANSPORTATION
	DRAWN -	REVISED -	
PLOT SCALE = 1:100	CHECKED -	REVISED -	
PLOT DATE = 12/16/2019	DATE -	REVISED -	

PROPOSED PAVEMENT MARKINGS

SCALE: | SHEET 2 OF 18 SHEETS | STA. TO STA.

F.A.P. RTE.	SECTION	COUNTY	TOTAL SHEETS	SHEET NO.
318		PEORIA	180	110
		CONTRACT NO. 68C98		
		ILLINOIS FED. AID PROJECT		

72[(7,7-1,6-1)RS-2(7-2,3)RS]

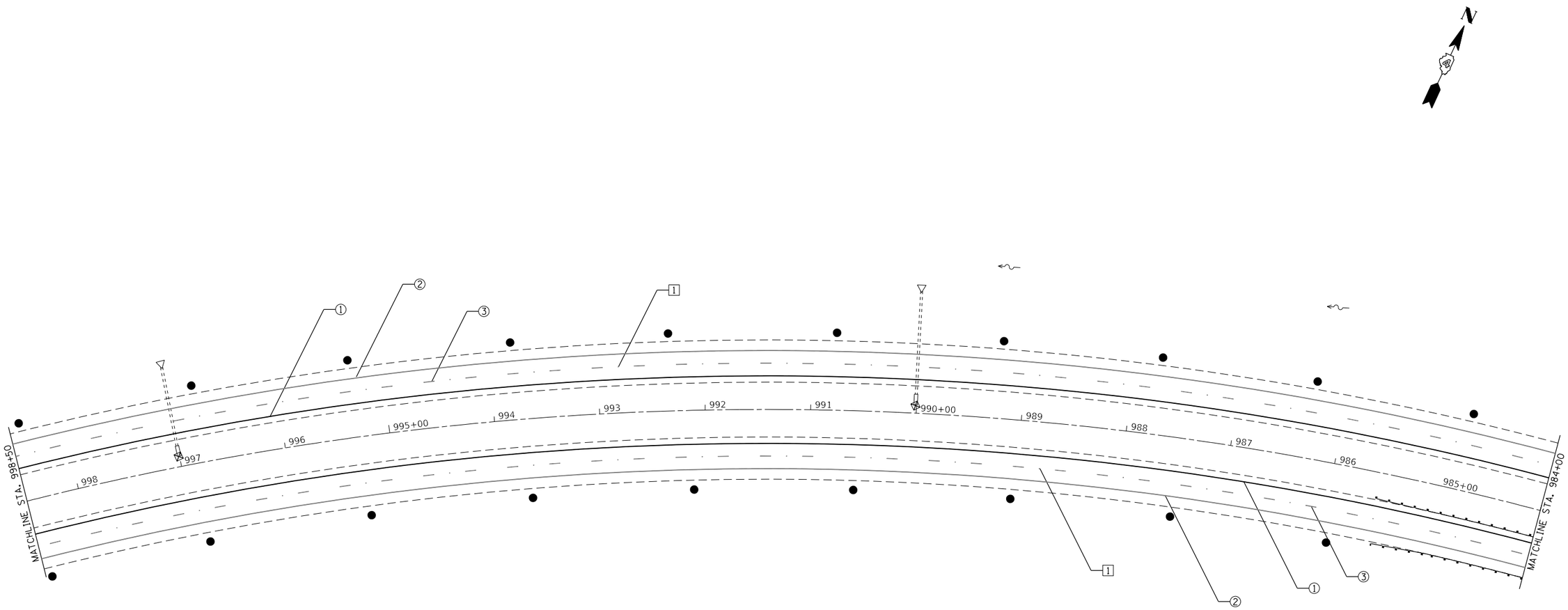

PAVEMENT MARKING LEGEND

① 4″ YELLOW
② 4″ WHITE
③ 6″ WHITE SKIP DASH — 10′ 30′ 10′
④ 8″ WHITE SKIP DASH — 3′ 9′ 3′ 9′ 3′
⑤ 8″ WHITE
⑥ 12″ WHITE — 45° — 30′ (>45 MPH) 20′ (<45 MPH)
⑦ 24′ WHITE
⑧ LETTERS AND SYMBOLS
⑨ 4″ WHITE SKIP DASH — 10′ 30′ 10′

RAISED REFLECTIVE PAVEMENT MARKERS (RRPM)

1 ◁ ONE-WAY CRYSTAL MARKER AT 80′ CENTERS
2 ◁ ONE-WAY CRYSTAL MARKER AT 40′ CENTERS
3 ◁ ONE-WAY CRYSTAL MARKER AT 20′ CENTERS
4 ◀ ONE-WAY AMBER MARKER AT 40′ CENTERS
◁ ONE-WAY CRYSTAL MARKER
◀ ONE-WAY AMBER MARKER

DELINEATORS

RECOVERABLE DELINEATOR

DOUBLE REFLECTOR RECOVERABLE DELINEATOR

10′ 30′ 10′ 30′ 10′ 30′ 10′ — 80′

▶ ONE WAY YELLOW R.R.P.M.
▷ ONE WAY WHITE R.R.P.M.

MODEL: Default
FILE NAME: pw:\\dlanroom.dot.illinois.gov:PWIDOT\Documents\IDOT Offices\District 4\Projects\D4 68C98\CADData\CADsheets\Final Pavement Markings.dgn

USER NAME = $USER$	DESIGNED -	REVISED -
	DRAWN -	REVISED -
PLOT SCALE = 1:100	CHECKED -	REVISED -
PLOT DATE = 12/16/2019	DATE -	REVISED -

STATE OF ILLINOIS
DEPARTMENT OF TRANSPORTATION

PROPOSED PAVEMENT MARKINGS

SCALE: | SHEET 3 OF 18 SHEETS | STA. | TO STA.

F.A.P. RTE.	SECTION	COUNTY	TOTAL SHEETS	SHEET NO.
318		PEORIA	180	111
		CONTRACT NO. 68C98		
	ILLINOIS	FED. AID PROJECT		

72[(7,7-1,6-1)RS-2(7-2,3)RS]

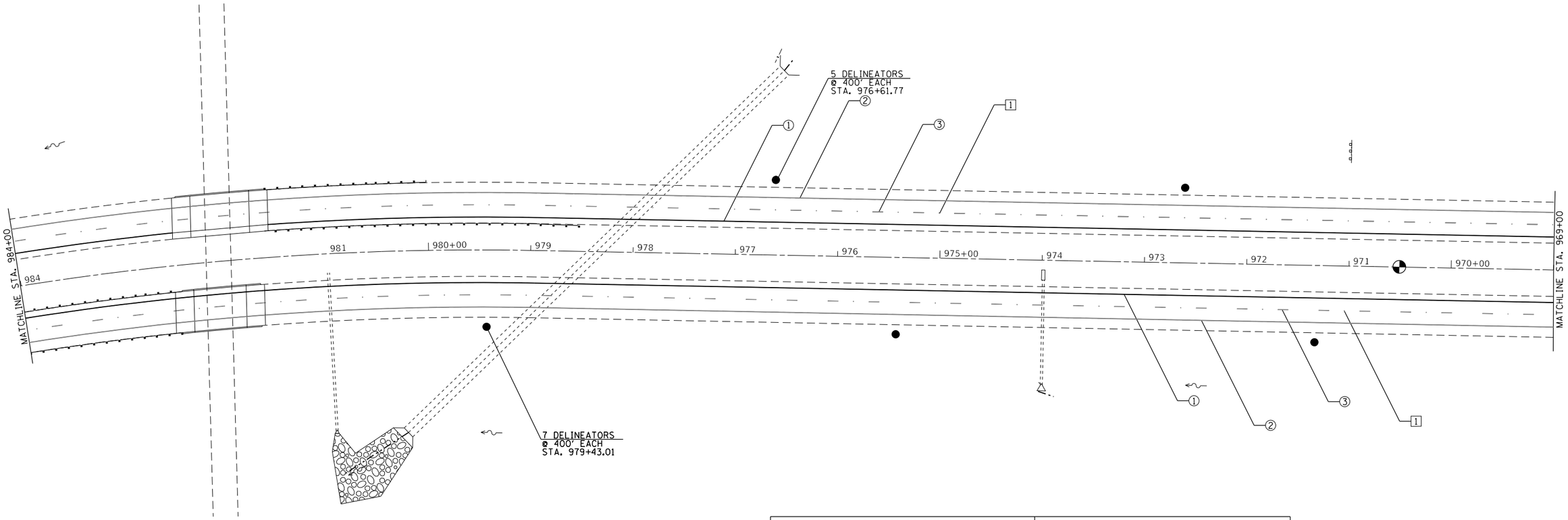

PAVEMENT MARKING LEGEND

1. 4" YELLOW
2. 4" WHITE
3. 6" WHITE SKIP DASH — 10' 30' 10'
4. 8" WHITE SKIP DASH — 3' 9' 3' 9' 3'
5. 8" WHITE
6. 12" WHITE — 45°; 30' (>45 MPH); 20' (<45 MPH)
7. 24' WHITE
8. LETTERS AND SYMBOLS
9. 4" WHITE SKIP DASH — 10' 30' 10'

RAISED REFLECTIVE PAVEMENT MARKERS (RRPM)

1	◁ ONE-WAY CRYSTAL MARKER AT 80' CENTERS
2	◁ ONE-WAY CRYSTAL MARKER AT 40' CENTERS
3	◁ ONE-WAY CRYSTAL MARKER AT 20' CENTERS
4	◀ ONE-WAY AMBER MARKER AT 40' CENTERS

◁ ONE-WAY CRYSTAL MARKER
◀ ONE-WAY AMBER MARKER

DELINEATORS

RECOVERABLE DELINEATOR

DOUBLE REFLECTOR RECOVERABLE DELINEATOR

10' 30' 10' 30' 10' 30' 10' — 80'

▶ ONE WAY YELLOW R.R.P.M.
▷ ONE WAY WHITE R.R.P.M.

MODEL: Default
FILE NAME: pw:\\ahanroom.dot.illinois.gov:PWIDOTDocuments:IDOT Offices:District 4\Projects\D4 68C98\CADData\CADsheets\Final Pavement Markings.dgn

USER NAME = $USER$	DESIGNED -	REVISED -
	DRAWN -	REVISED -
PLOT SCALE = 1:100	CHECKED -	REVISED -
PLOT DATE = 12/16/2019	DATE -	REVISED -

STATE OF ILLINOIS
DEPARTMENT OF TRANSPORTATION

PROPOSED PAVEMENT MARKINGS

SCALE: | SHEET 4 OF 18 SHEETS | STA. | TO STA.

F.A.P. RTE.	SECTION	COUNTY	TOTAL SHEETS	SHEET NO.
318		PEORIA	180	112
		CONTRACT NO. 68C98		
	ILLINOIS	FED. AID PROJECT		

72[(7,7-1,6-1)RS-2(7-2,3)RS]

N

11 DOUBLE DELINEATORS
@ 100' EACH
STA. 956+45.25

STA. 957+49.68 (IL 6)
STA. 30+89.50 (RAMP D)

MATCHLINE STA. 969+00

969 | 965+00 | 964 | 963 | 962 | 961 | 960+00 | 959 | 958 | 957 | 956

MATCHLINE STA. 955+00

PAVEMENT MARKING LEGEND

① 4'' YELLOW
② 4'' WHITE
③ 6'' WHITE SKIP DASH — 10' 30' 10'
④ 8'' WHITE SKIP DASH — 3' 9' 3' 9' 3'
⑤ 8'' WHITE
⑥ 12'' WHITE — 45°, 30' (>45 MPH), 20' (<45 MPH)
⑦ 24' WHITE
⑧ LETTERS AND SYMBOLS
⑨ 4'' WHITE SKIP DASH — 10' 30' 10'

RAISED REFLECTIVE PAVEMENT MARKERS (RRPM)

1 ◁ ONE-WAY CRYSTAL MARKER AT 80' CENTERS
2 ◁ ONE-WAY CRYSTAL MARKER AT 40' CENTERS
3 ◁ ONE-WAY CRYSTAL MARKER AT 20' CENTERS
4 ◀ ONE-WAY AMBER MARKER AT 40' CENTERS
◁ ONE-WAY CRYSTAL MARKER
◀ ONE-WAY AMBER MARKER

DELINEATORS

RECOVERABLE DELINEATOR

DOUBLE REFLECTOR RECOVERABLE DELINEATOR

10' 30' 10' 30' 10' 30' 10' — 80'

▶ ONE WAY YELLOW R.R.P.M.
▷ ONE WAY WHITE R.R.P.M.

MODEL: Default
FILE NAME: pw:\\planroom.dot.illinois.gov:PWIDOT\Documents\IDOT Offices\District 4\Projects\D4_68C98\CADData\CADSheets\Final Pavement Marking.dgn

USER NAME = $USER$	DESIGNED -	REVISED -	
	DRAWN -	REVISED -	
PLOT SCALE = 1:100	CHECKED -	REVISED -	
PLOT DATE = 12/16/2019	DATE -	REVISED -	

STATE OF ILLINOIS
DEPARTMENT OF TRANSPORTATION

PROPOSED PAVEMENT MARKINGS

SCALE: | SHEET 5 OF 18 SHEETS | STA. | TO STA.

F.A.P. RTE.	SECTION	COUNTY	TOTAL SHEETS	SHEET NO.
318		PEORIA	180	113
		CONTRACT NO. 68C98		
		ILLINOIS	FED. AID PROJECT	

72[(7,7-1,6-1)RS-2(7-2,3)RS]

N

MATCHLINE STA. 15+00

6 DELINEATORS
@ 80' EACH
STA. 18+60.64

5 YELLOW DELINEATORS
@ 80' EACH

STA. 949+62.32 (IL 6)
STA. 22+98.00 (RAMP D)

STA. 945+59.81 (IL 6)
STA. 18+96.62 (RAMP D)

3 DELINEATORS
@ 400' EACH
STA. 944+39.68

MATCHLINE STA. 955+00

955+00 | 954 | 953 | 952 | 951 | 950+00 | 949 | 946 | 945+00 | 944 | 943 | 942

MATCHLINE STA. 941+00

STA 951+64.6 (IL 6)
STA 0+00 (RAMP B)

7 DOUBLE DELINEATORS
@ 100' EACH
STA. 0+00

STA. 948+81.50 (IL 6)
STA. 2+83.00 (RAMP B)

3 DELINEATORS
@ 400' EACH
STA. 942+56+.69

9 DELINEATORS
@ 80' EACH
STA. 7+74.38

STA. 944+85.65 (IL 6)
STA. 6+77.90 (RAMP B)

8 YELLOW DELINEATORS
@ 80' EACH

MATCHLINE STA. 11+50

PAVEMENT MARKING LEGEND

① 4'' YELLOW
② 4'' WHITE
③ 6'' WHITE SKIP DASH — 10' 30' 10'
④ 8'' WHITE SKIP DASH — 3' 9' 3' 9' 3'
⑤ 8'' WHITE
⑥ 12'' WHITE — 45°, 30' (>45 MPH), 20' (<45 MPH)
⑦ 24' WHITE
⑧ LETTERS AND SYMBOLS
⑨ 4'' WHITE SKIP DASH — 10' 30' 10'

RAISED REFLECTIVE PAVEMENT MARKERS (RRPM)

1 ◁ ONE-WAY CRYSTAL MARKER AT 80' CENTERS
2 ◁ ONE-WAY CRYSTAL MARKER AT 40' CENTERS
3 ◁ ONE-WAY CRYSTAL MARKER AT 20' CENTERS
4 ◀ ONE-WAY AMBER MARKER AT 40' CENTERS
◁ ONE-WAY CRYSTAL MARKER
◀ ONE-WAY AMBER MARKER

DELINEATORS

RECOVERABLE DELINEATOR

DOUBLE REFLECTOR RECOVERABLE DELINEATOR

10' 30' 10' 30' 10' 30' 10' — 80'

▶ ONE WAY YELLOW R.R.P.M.
▷ ONE WAY WHITE R.R.P.M.

MODEL: Default
FILE NAME: pw:\\planroom.dot.illinois.gov:PWIDOT\Documents\IDOT Offices\District 4\Projects\D4_68C98\CADData\CADsheets\Final Pavement Markings.dgn

USER NAME = $USER$	DESIGNED -	REVISED -	
	DRAWN -	REVISED -	
PLOT SCALE = 1:100	CHECKED -	REVISED -	
PLOT DATE = 12/16/2019	DATE -	REVISED -	

STATE OF ILLINOIS
DEPARTMENT OF TRANSPORTATION

PROPOSED PAVEMENT MARKINGS

SCALE: | SHEET 6 OF 18 SHEETS | STA. | TO STA.

F.A.P. RTE.	SECTION	COUNTY	TOTAL SHEETS	SHEET NO.
318		PEORIA	180	114
		CONTRACT NO. 68C98		
	ILLINOIS	FED. AID PROJECT		

72[(7,7-1,6-1)RS-2(7-2,3)RS]

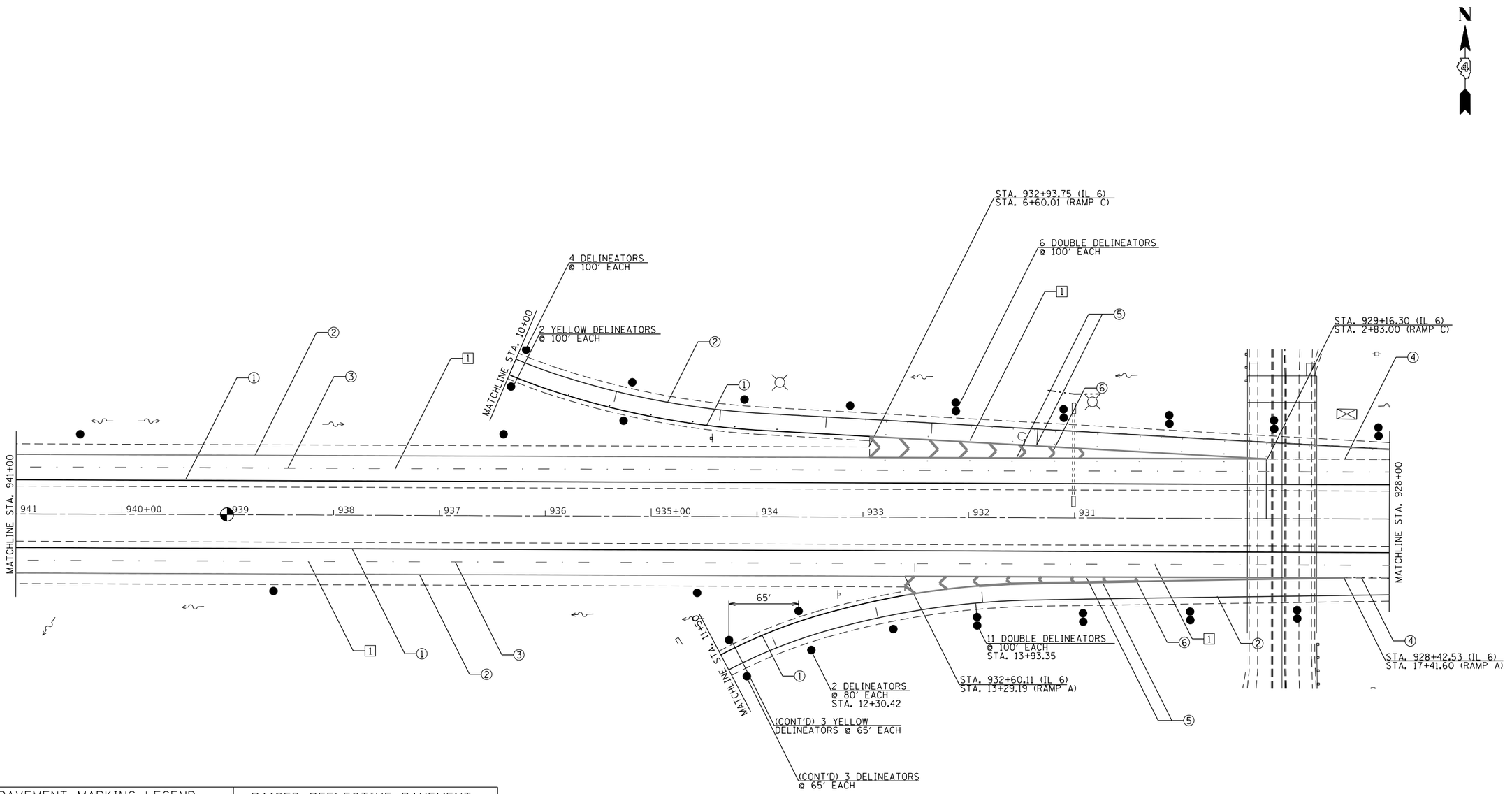

PAVEMENT MARKING LEGEND

① 4'' YELLOW
② 4'' WHITE
③ 6'' WHITE SKIP DASH — 10' 30' 10'
④ 8'' WHITE SKIP DASH — 3' 9' 3' 9' 3'
⑤ 8'' WHITE
⑥ 12'' WHITE — 45°, 30' (>45 MPH), 20' (<45 MPH)
⑦ 24' WHITE
⑧ LETTERS AND SYMBOLS
⑨ 4'' WHITE SKIP DASH — 10' 30' 10'

RAISED REFLECTIVE PAVEMENT MARKERS (RRPM)

1 ◁ ONE-WAY CRYSTAL MARKER AT 80' CENTERS
2 ◁ ONE-WAY CRYSTAL MARKER AT 40' CENTERS
3 ◁ ONE-WAY CRYSTAL MARKER AT 20' CENTERS
4 ◀ ONE-WAY AMBER MARKER AT 40' CENTERS
◁ ONE-WAY CRYSTAL MARKER
◀ ONE-WAY AMBER MARKER

DELINEATORS

RECOVERABLE DELINEATOR

DOUBLE REFLECTOR RECOVERABLE DELINEATOR

10' 30' 10' 30' 10' 30' 10' — 80'

▶ ONE WAY YELLOW R.R.P.M.
▷ ONE WAY WHITE R.R.P.M.

MODEL: Default
FILE NAME: pw:\\dlanroom.dot.illinois.gov:PWIDOT\Documents\IDOT Offices\District 4\Projects\D4 68C98\CADData\CADsheets\Final Pavement Markings.dgn

USER NAME = $USER$	DESIGNED -	REVISED -
	DRAWN -	REVISED -
PLOT SCALE = 1:100	CHECKED -	REVISED -
PLOT DATE = 12/16/2019	DATE -	REVISED -

STATE OF ILLINOIS
DEPARTMENT OF TRANSPORTATION

PROPOSED PAVEMENT MARKINGS

SCALE: | SHEET 7 OF 18 SHEETS | STA. | TO STA.

F.A.P. RTE.	SECTION	COUNTY	TOTAL SHEETS	SHEET NO.
318		PEORIA	180	115
		CONTRACT NO. 68C98		
	ILLINOIS	FED. AID PROJECT		

72[(7,7-1,6-1)RS-2(7-2,3)RS]

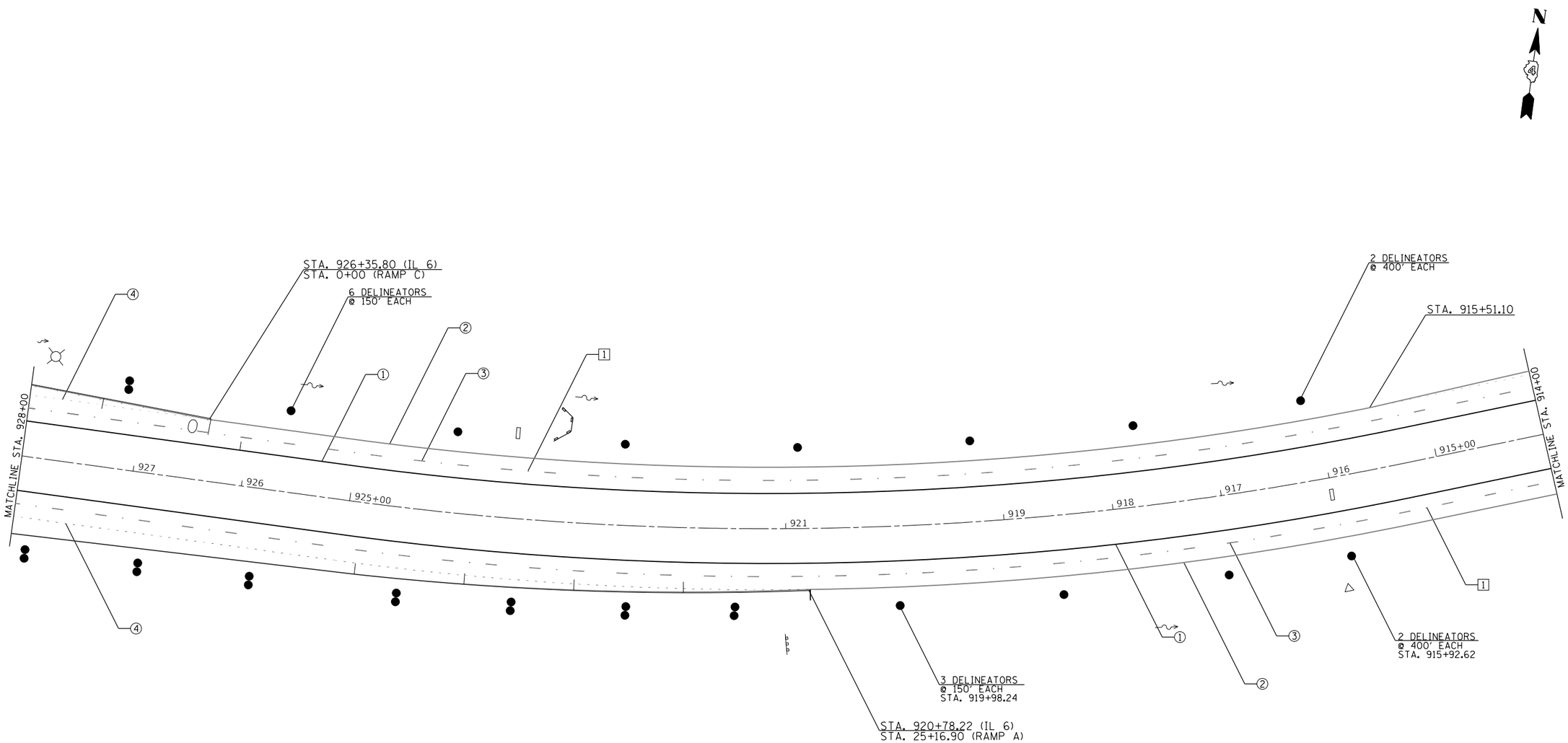

PAVEMENT MARKING LEGEND

1. 4'' YELLOW
2. 4'' WHITE
3. 6'' WHITE SKIP DASH — 10' 30' 10'
4. 8'' WHITE SKIP DASH — 3' 9' 3' 9' 3'
5. 8'' WHITE
6. 12'' WHITE — 45°; 30' (>45 MPH); 20' (<45 MPH)
7. 24' WHITE
8. LETTERS AND SYMBOLS
9. 4'' WHITE SKIP DASH — 10' 30' 10'

RAISED REFLECTIVE PAVEMENT MARKERS (RRPM)

1. ◁ ONE-WAY CRYSTAL MARKER AT 80' CENTERS
2. ◁ ONE-WAY CRYSTAL MARKER AT 40' CENTERS
3. ◁ ONE-WAY CRYSTAL MARKER AT 20' CENTERS
4. ◀ ONE-WAY AMBER MARKER AT 40' CENTERS

◁ ONE-WAY CRYSTAL MARKER
◀ ONE-WAY AMBER MARKER

DELINEATORS

RECOVERABLE DELINEATOR

DOUBLE REFLECTOR RECOVERABLE DELINEATOR

10' 30' 10' 30' 10' 30' 10' — 80'

▶ ONE WAY YELLOW R.R.P.M.
▷ ONE WAY WHITE R.R.P.M.

MODEL: Default
FILE NAME: pw:\\allanroom.dot.illinois.gov:PWIDOT\Documents\IDOT Offices\District 4\Projects\04 68C98\CADData\CADSheets\Final Pavement Markings.dgn

USER NAME = $USER$	DESIGNED -	REVISED -	
	DRAWN -	REVISED -	
PLOT SCALE = 1:100	CHECKED -	REVISED -	
PLOT DATE = 12/16/2019	DATE -	REVISED -	

STATE OF ILLINOIS
DEPARTMENT OF TRANSPORTATION

PROPOSED PAVEMENT MARKINGS

SCALE: | SHEET 8 OF 18 SHEETS | STA. | TO STA.

F.A.P. RTE.	SECTION	COUNTY	TOTAL SHEETS	SHEET NO.
318		PEORIA	180	116
		CONTRACT NO. 68C98		
	ILLINOIS	FED. AID PROJECT		

72[(7,7-1,6-1)RS-2(7-2,3)RS]

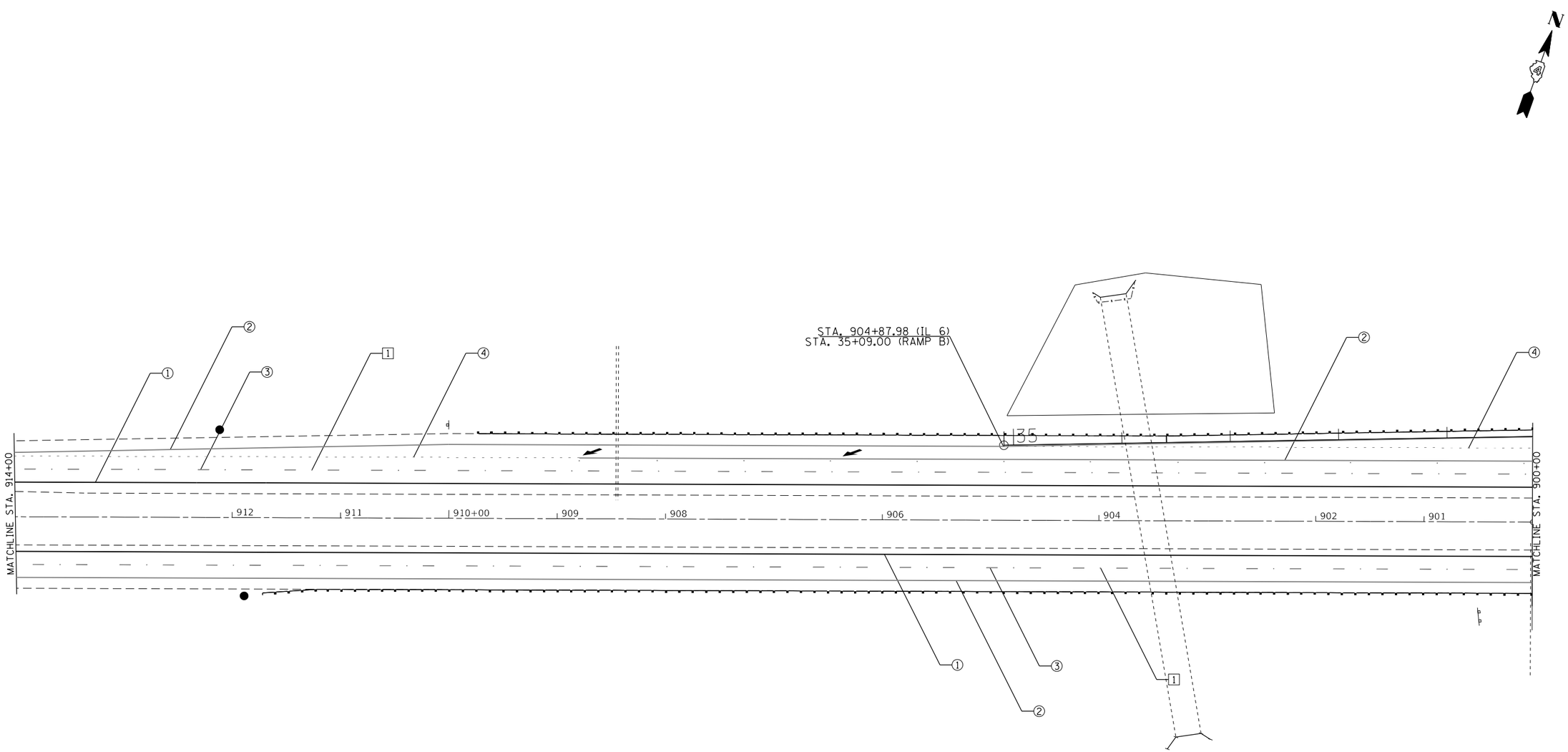

PAVEMENT MARKING LEGEND

① 4″ YELLOW
② 4″ WHITE
③ 6″ WHITE SKIP DASH — 10′ 30′ 10′
④ 8″ WHITE SKIP DASH — 3′ 9′ 3′ 9′ 3′
⑤ 8″ WHITE
⑥ 12″ WHITE — 45° — 30′ (>45 MPH) 20′ (<45 MPH)
⑦ 24′ WHITE
⑧ LETTERS AND SYMBOLS
⑨ 4″ WHITE SKIP DASH — 10′ 30′ 10′

RAISED REFLECTIVE PAVEMENT MARKERS (RRPM)

1 ◁ ONE-WAY CRYSTAL MARKER AT 80′ CENTERS
2 ◁ ONE-WAY CRYSTAL MARKER AT 40′ CENTERS
3 ◁ ONE-WAY CRYSTAL MARKER AT 20′ CENTERS
4 ◀ ONE-WAY AMBER MARKER AT 40′ CENTERS
◁ ONE-WAY CRYSTAL MARKER
◀ ONE-WAY AMBER MARKER

DELINEATORS

RECOVERABLE DELINEATOR

DOUBLE REFLECTOR RECOVERABLE DELINEATOR

10′ 30′ 10′ 30′ 10′ 30′ 10′
80′
▶ ONE WAY YELLOW R.R.P.M.
▷ ONE WAY WHITE R.R.P.M.

USER NAME = $USER$	DESIGNED -	REVISED -
	DRAWN -	REVISED -
PLOT SCALE = 1:100	CHECKED -	REVISED -
PLOT DATE = 12/16/2019	DATE -	REVISED -

STATE OF ILLINOIS
DEPARTMENT OF TRANSPORTATION

PROPOSED PAVEMENT MARKINGS

SCALE: | SHEET 9 OF 18 SHEETS | STA. | TO STA.

F.A.P. RTE.	SECTION	COUNTY	TOTAL SHEETS	SHEET NO.
318		PEORIA	180	117
		CONTRACT NO. 68C98		
	ILLINOIS	FED. AID PROJECT		

72[(7,7-1,6-1)RS-2(7-2,3)RS]

MODEL: Default
FILE NAME: pw:\\planroom.dot.illinois.gov:PWIDOT\Documents\IDOT Offices\District 4\Projects\D4_68C98\CADData\CADsheets\Final Pavement Markings.dgn

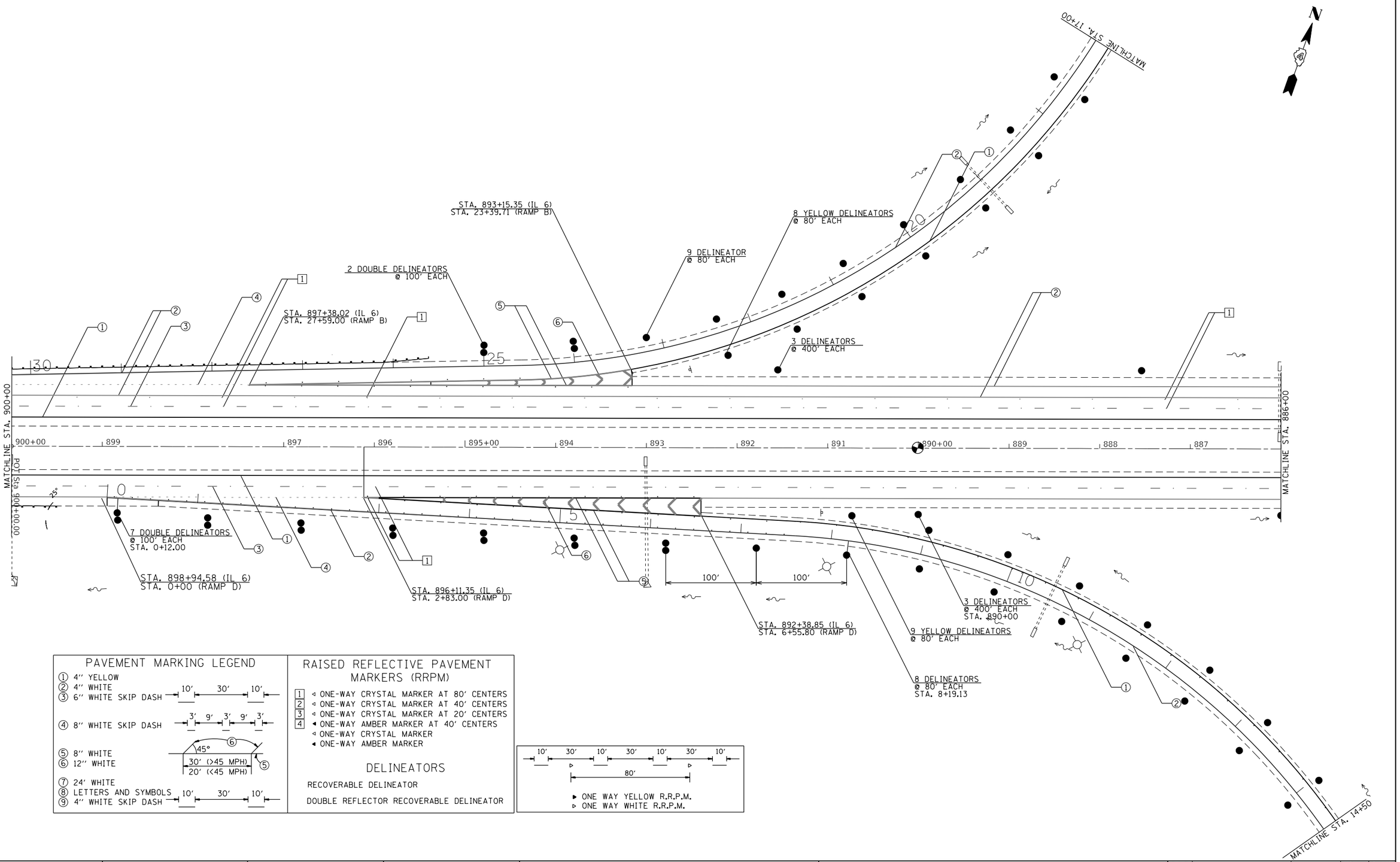

PAVEMENT MARKING LEGEND

1. 4" YELLOW
2. 4" WHITE
3. 6" WHITE SKIP DASH — 10' 30' 10'
4. 8" WHITE SKIP DASH — 3' 9' 3' 9' 3'
5. 8" WHITE
6. 12" WHITE — 45°; 30' (>45 MPH); 20' (<45 MPH)
7. 24' WHITE
8. LETTERS AND SYMBOLS
9. 4" WHITE SKIP DASH — 10' 30' 10'

RAISED REFLECTIVE PAVEMENT MARKERS (RRPM)

- [1] ◁ ONE-WAY CRYSTAL MARKER AT 80' CENTERS
- [2] ◁ ONE-WAY CRYSTAL MARKER AT 40' CENTERS
- [3] ◁ ONE-WAY CRYSTAL MARKER AT 20' CENTERS
- [4] ◀ ONE-WAY AMBER MARKER AT 40' CENTERS
- ◁ ONE-WAY CRYSTAL MARKER
- ◀ ONE-WAY AMBER MARKER

DELINEATORS

RECOVERABLE DELINEATOR

DOUBLE REFLECTOR RECOVERABLE DELINEATOR

10' 30' 10' 30' 10' 30' 10' — 80'

▶ ONE WAY YELLOW R.R.P.M.
▷ ONE WAY WHITE R.R.P.M.

USER NAME = $USER$	DESIGNED -	REVISED -	
	DRAWN -	REVISED -	
PLOT SCALE = 1:100	CHECKED -	REVISED -	
PLOT DATE = 12/16/2019	DATE -	REVISED -	

STATE OF ILLINOIS
DEPARTMENT OF TRANSPORTATION

PROPOSED PAVEMENT MARKINGS

SCALE: | SHEET 10 OF 18 SHEETS | STA. | TO STA.

F.A.P. RTE.	SECTION	COUNTY	TOTAL SHEETS	SHEET NO.
318		PEORIA	180	118
		CONTRACT NO. 68C98		
		ILLINOIS	FED. AID PROJECT	

72[(7,7-1,6-1)RS-2(7-2,3)RS]

MODEL: Default
FILE NAME: pw:\\planroom.dot.illinois.gov:PWIDOT\Documents\IDOT Offices\District 4\Projects\D4 68C98\CADData\CADsheets\Final Pavement Marking.dgn

PAVEMENT MARKING LEGEND

① 4" YELLOW
② 4" WHITE
③ 6" WHITE SKIP DASH — 10' 30' 10'
④ 8" WHITE SKIP DASH — 3' 9' 3' 9' 3'
⑤ 8" WHITE
⑥ 12" WHITE — 45°; 30' (>45 MPH); 20' (<45 MPH)
⑦ 24" WHITE
⑧ LETTERS AND SYMBOLS
⑨ 4" WHITE SKIP DASH — 10' 30' 10'

RAISED REFLECTIVE PAVEMENT MARKERS (RRPM)

1 ◁ ONE-WAY CRYSTAL MARKER AT 80' CENTERS
2 ◁ ONE-WAY CRYSTAL MARKER AT 40' CENTERS
3 ◁ ONE-WAY CRYSTAL MARKER AT 20' CENTERS
4 ◀ ONE-WAY AMBER MARKER AT 40' CENTERS
◁ ONE-WAY CRYSTAL MARKER
◀ ONE-WAY AMBER MARKER

DELINEATORS

RECOVERABLE DELINEATOR

DOUBLE REFLECTOR RECOVERABLE DELINEATOR

N

10' 30' 10' 30' 10' 30' 10' — 80'

▶ ONE WAY YELLOW R.R.P.M.
▷ ONE WAY WHITE R.R.P.M.

(CONT'D) 20 YELLOW DELINEATORS @ 55' EACH

(CONT'D) 20 DELINEATORS @ 55' EACH

MATCHLINE STA. 13+00

2 YELLOW DELINEATORS @ 65' EACH

2 DELINEATORS @ 65' EACH STA. 11+01.24

4 DELINEATORS @ 80' EACH STA. 9+67.91

2 YELLOW DELINEATORS @ 80' EACH

STA. 880+18.03 (IL 6)
STA. 6+78.00 (RAMP A)

7 DOUBLE DELINEATORS @ 100' EACH STA. 6+36.41

STA. 876+22.78 (IL 6)
STA. 2+82.20 (RAMP A)

STA. 873+40.05 (IL 6)
STA. 0+00 (RAMP A)

MATCHLINE STA. 886+00

886 | 885+00 | 884 | 883 | 881 | 880+00 | 879 | 878 | 876 | 874 | 873

MATCHLINE STA. 872+00

185

9 DOUBLE DELINEATORS @ 100' EACH STA. 18+22.80

2 DELINEATORS @ 100' EACH STA. 16+56.86

STA. 879+87.42 (IL 6)
STA. 17+39.83 (RAMP C)

STA. 874+49.54 (IL 6)
STA. 22+72.00 (RAMP C)

(CONT'D) 13 YELLOW DELINEATORS @ 55' EACH

(CONT'D) 13 DELINEATORS @ 55' EACH

MATCHLINE STA. 13+00

MODEL: Default
FILE NAME: pw:\\dahroom.dot.illinois.gov:PWIDOT\Documents\IDOT Offices\District 4\Projects\D3 68C98\CADData\CADsheets\Final Pavement Markings.dgn

USER NAME = $USER$	DESIGNED -	REVISED -	
	DRAWN -	REVISED -	
PLOT SCALE = 1:100	CHECKED -	REVISED -	
PLOT DATE = 12/16/2019	DATE -	REVISED -	

STATE OF ILLINOIS
DEPARTMENT OF TRANSPORTATION

PROPOSED PAVEMENT MARKINGS

SCALE: | SHEET 11 OF 18 SHEETS | STA. | TO STA.

F.A.P. RTE.	SECTION	COUNTY	TOTAL SHEETS	SHEET NO.
318		PEORIA	180	119
		CONTRACT NO. 68C98		
	ILLINOIS	FED. AID PROJECT		

72[(7,7-1,6-1)RS-2(7-2,3)RS]

N

END OF PROJECT
STA. 866+25

MATCHLINE STA. 872+00

872 871 870+00 869 868 867 866 865+00 864 863 862 861 860+00 859

2 DELINEATORS
@ 150' EACH
STA. 868+18.37

STA. 867+91.07 (IL 6)
STA. 29+20.00 (RAMP C)

STA. 864+45.52 (IL 6)
STA. 22+54.08 (RAMP E)

END OF PROJECT
STA. 860+26

(CONT'D) 15 YELLOW
DELINEATORS 2 85' EACH

MATCHLINE STA. 15+00

PAVEMENT MARKING LEGEND

1. 4" YELLOW
2. 4" WHITE
3. 6" WHITE SKIP DASH — 10' 30' 10'
4. 8" WHITE SKIP DASH — 3' 9' 3' 9' 3'
5. 8" WHITE
6. 12" WHITE — 45°, 30' (>45 MPH), 20' (<45 MPH)
7. 24' WHITE
8. LETTERS AND SYMBOLS
9. 4" WHITE SKIP DASH — 10' 30' 10'

RAISED REFLECTIVE PAVEMENT MARKERS (RRPM)

1. ◁ ONE-WAY CRYSTAL MARKER AT 80' CENTERS
2. ◁ ONE-WAY CRYSTAL MARKER AT 40' CENTERS
3. ◁ ONE-WAY CRYSTAL MARKER AT 20' CENTERS
4. ◀ ONE-WAY AMBER MARKER AT 40' CENTERS

◁ ONE-WAY CRYSTAL MARKER
◀ ONE-WAY AMBER MARKER

DELINEATORS

RECOVERABLE DELINEATOR

DOUBLE REFLECTOR RECOVERABLE DELINEATOR

10' 30' 10' 30' 10' 30' 10'
80'

▶ ONE WAY YELLOW R.R.P.M.
▷ ONE WAY WHITE R.R.P.M.

USER NAME = $USER$	DESIGNED -	REVISED -
	DRAWN -	REVISED -
PLOT SCALE = 1:100	CHECKED -	REVISED -
PLOT DATE = 12/16/2019	DATE -	REVISED -

STATE OF ILLINOIS
DEPARTMENT OF TRANSPORTATION

PROPOSED PAVEMENT MARKINGS

SCALE: | SHEET 12 OF 18 SHEETS | STA. | TO STA.

F.A.P. RTE.	SECTION	COUNTY	TOTAL SHEETS	SHEET NO.
318		PEORIA	180	120
		CONTRACT NO. 68C98		
	ILLINOIS	FED. AID PROJECT		

72[(7,7-1,6-1)RS-2(7-2,3)RS]

MODEL: Default
FILE NAME: pw:\\dalnroom.dot.illinois.gov:PWIDOT\Documents\IDOT Offices\District 4\Projects\D4_68C98\CADData\CADsheets\Final Pavement Markings.dgn

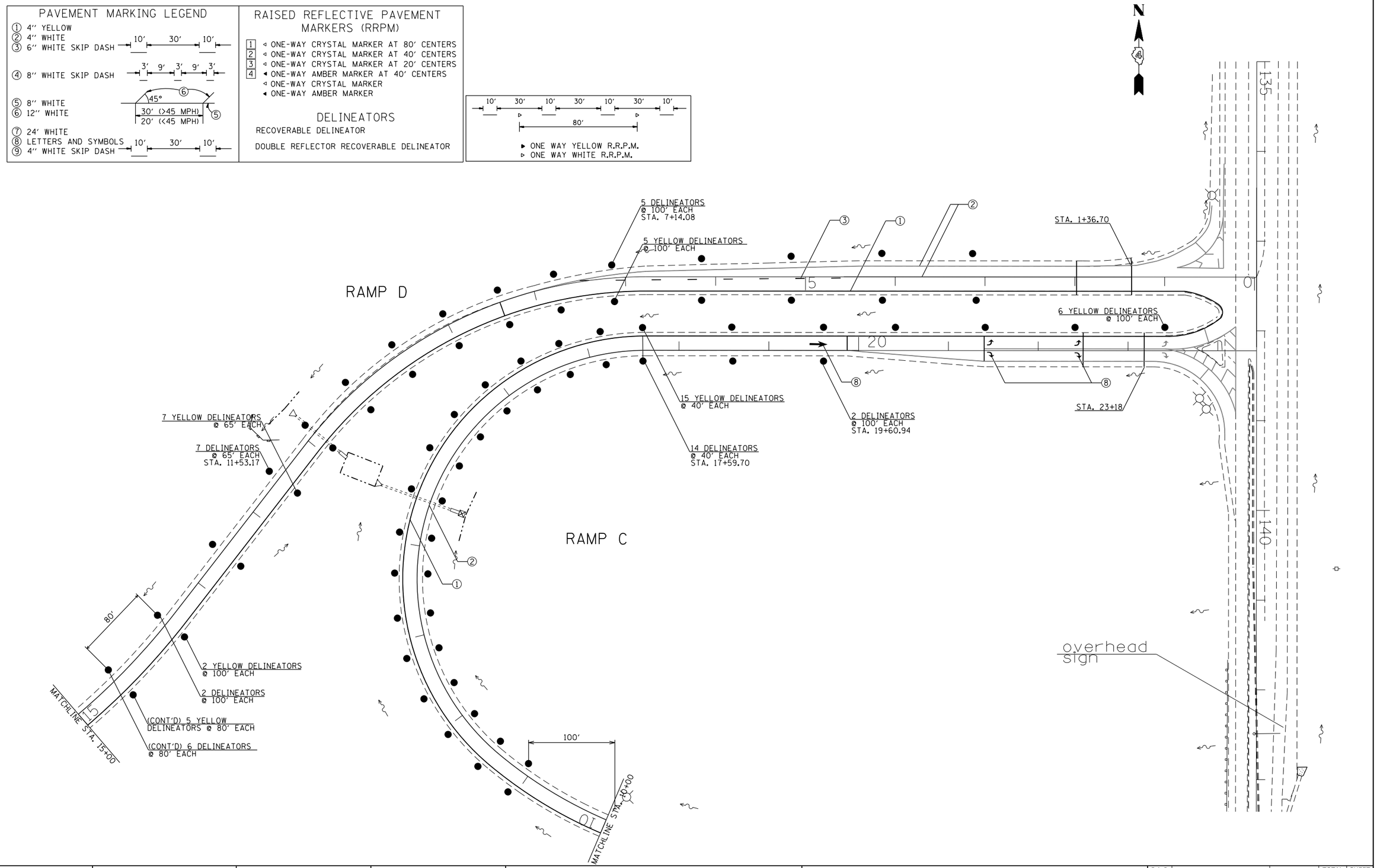

MODEL: Default
FILE NAME: pw:\\planroom.dot.illinois.gov:PWIDOT\Documents\IDOT Offices\District 4\Projects\D4_68C98\CADData\CADsheets\Final Pavement Markings.dgn

USER NAME = $USER$	DESIGNED -	REVISED -	STATE OF ILLINOIS DEPARTMENT OF TRANSPORTATION
	DRAWN -	REVISED -	
PLOT SCALE = 1:100	CHECKED -	REVISED -	
PLOT DATE = 12/16/2019	DATE -	REVISED -	

PROPOSED PAVEMENT MARKINGS

SCALE: | SHEET 13 OF 18 SHEETS | STA. | TO STA.

F.A.P. RTE.	SECTION	COUNTY	TOTAL SHEETS	SHEET NO.
318		PEORIA	180	121
		CONTRACT NO. 68C98		
		ILLINOIS	FED. AID PROJECT	

72[(7,7-1,6-1)RS-2(7-2,3)RS]

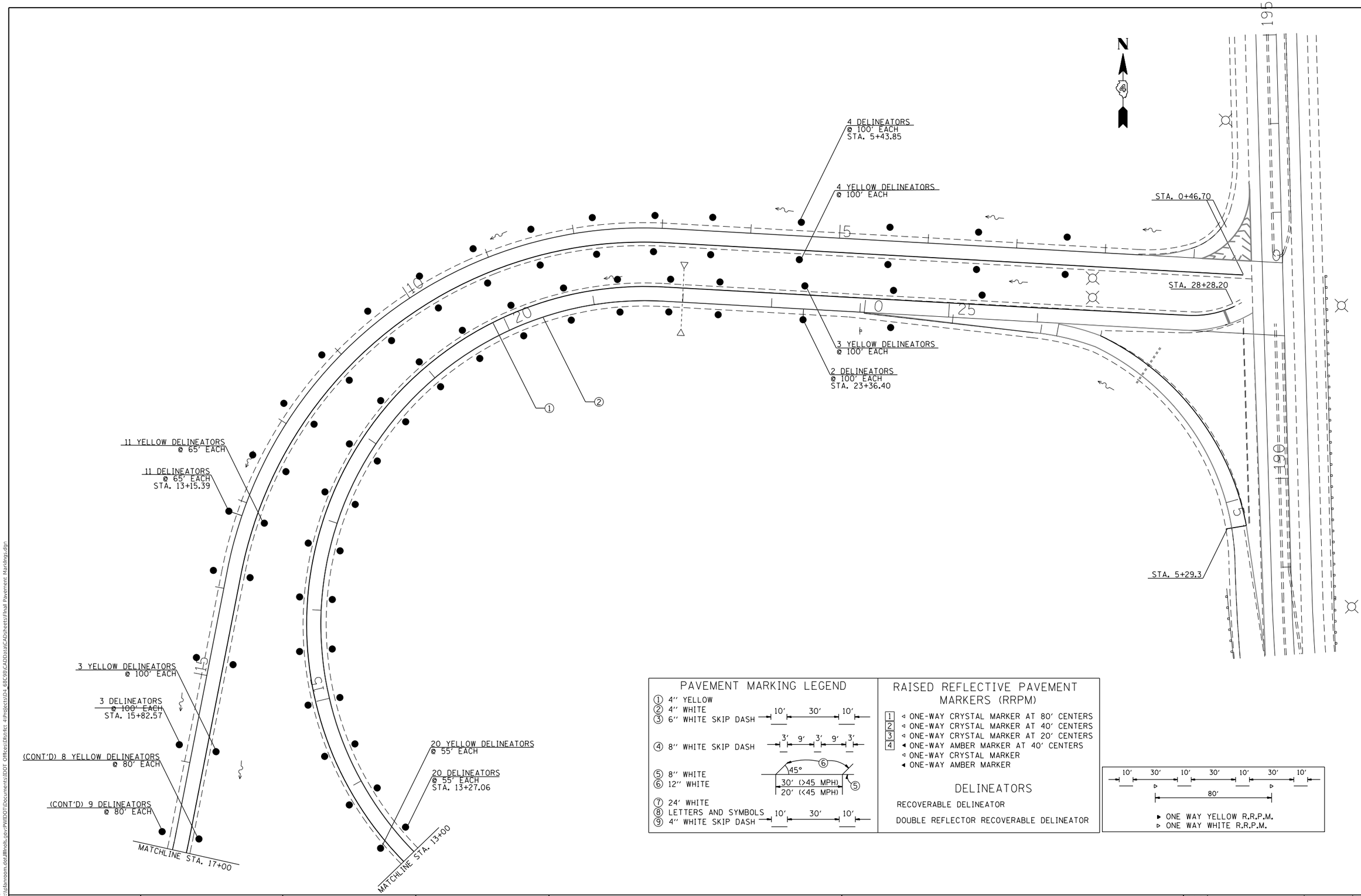

PAVEMENT MARKING LEGEND

① 4'' YELLOW
② 4'' WHITE
③ 6'' WHITE SKIP DASH — 10' 30' 10'
④ 8'' WHITE SKIP DASH — 3' 9' 3' 9' 3'
⑤ 8'' WHITE
⑥ 12'' WHITE — 45°; 30' (>45 MPH); 20' (<45 MPH)
⑦ 24'' WHITE
⑧ LETTERS AND SYMBOLS
⑨ 4'' WHITE SKIP DASH — 10' 30' 10'

RAISED REFLECTIVE PAVEMENT MARKERS (RRPM)

1 ◁ ONE-WAY CRYSTAL MARKER AT 80' CENTERS
2 ◁ ONE-WAY CRYSTAL MARKER AT 40' CENTERS
3 ◁ ONE-WAY CRYSTAL MARKER AT 20' CENTERS
4 ◀ ONE-WAY AMBER MARKER AT 40' CENTERS
◁ ONE-WAY CRYSTAL MARKER
◀ ONE-WAY AMBER MARKER

DELINEATORS

RECOVERABLE DELINEATOR

DOUBLE REFLECTOR RECOVERABLE DELINEATOR

10' 30' 10' 30' 10' 30' 10' — 80'

▶ ONE WAY YELLOW R.R.P.M.
▷ ONE WAY WHITE R.R.P.M.

MODEL: Default
FILE NAME: pw:\\bhanroom.dot.illinois.gov:PWIDOT\Documents\IDOT Offices\District 4\Projects\D4 68C98\CADData\CADsheets\Final Pavement Markings.dgn

USER NAME = $USER$	DESIGNED -	REVISED -
	DRAWN -	REVISED -
PLOT SCALE = 1:100	CHECKED -	REVISED -
PLOT DATE = 12/16/2019	DATE -	REVISED -

STATE OF ILLINOIS
DEPARTMENT OF TRANSPORTATION

PROPOSED PAVEMENT MARKINGS

SCALE: | SHEET 14 OF 18 SHEETS | STA. | TO STA.

F.A.P. RTE.	SECTION	COUNTY	TOTAL SHEETS	SHEET NO.
318		PEORIA	180	122
		CONTRACT NO. 68C98		
	ILLINOIS	FED. AID PROJECT		

72[(7,7-1,6-1)RS-2(7-2,3)RS]

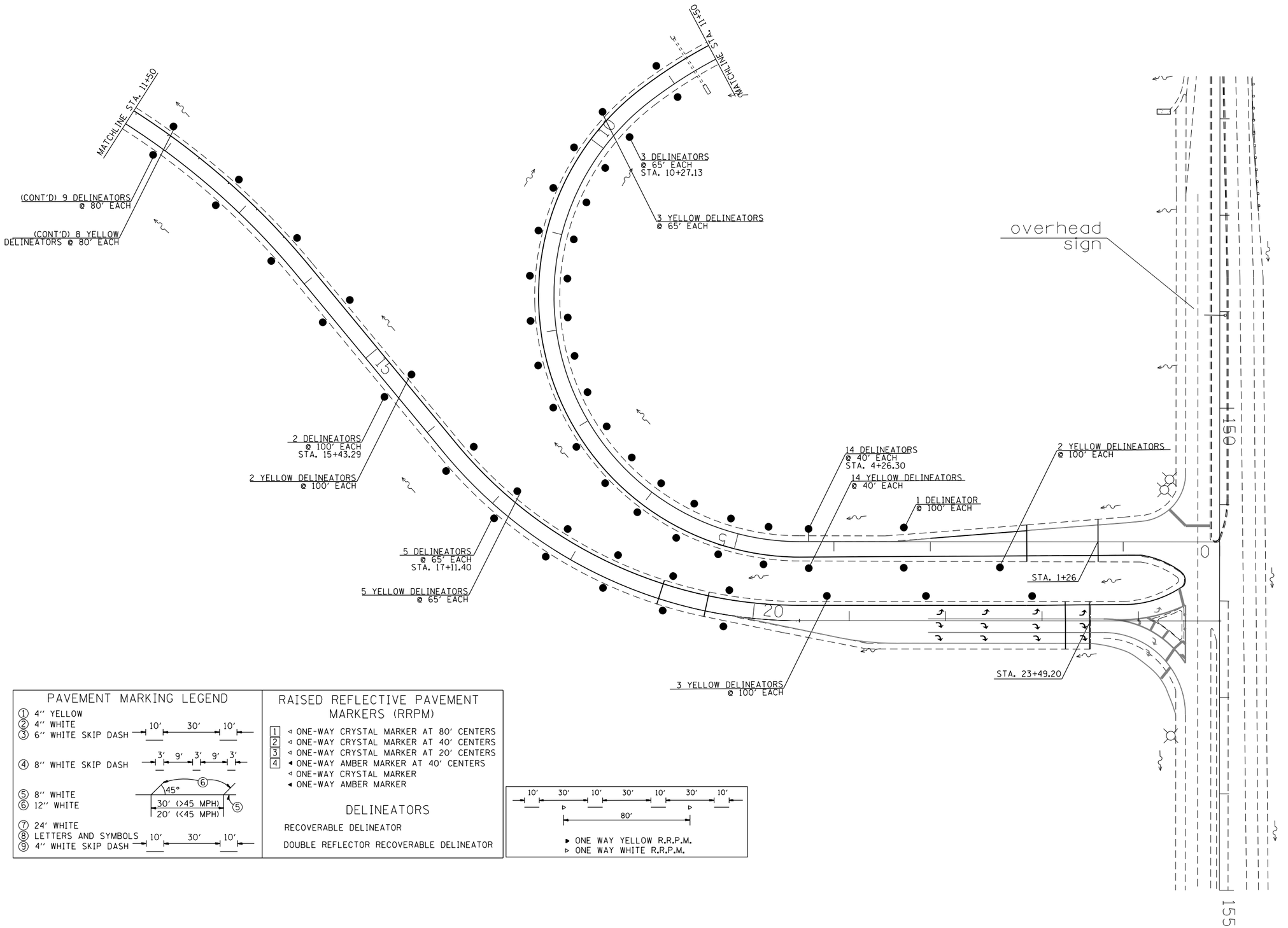

PAVEMENT MARKING LEGEND

1. 4" YELLOW
2. 4" WHITE
3. 6" WHITE SKIP DASH — 10' 30' 10'
4. 8" WHITE SKIP DASH — 3' 9' 3' 9' 3'
5. 8" WHITE
6. 12" WHITE — 45°; 30' (>45 MPH); 20' (<45 MPH)
7. 24' WHITE
8. LETTERS AND SYMBOLS
9. 4" WHITE SKIP DASH — 10' 30' 10'

RAISED REFLECTIVE PAVEMENT MARKERS (RRPM)

1. ◁ ONE-WAY CRYSTAL MARKER AT 80' CENTERS
2. ◁ ONE-WAY CRYSTAL MARKER AT 40' CENTERS
3. ◁ ONE-WAY CRYSTAL MARKER AT 20' CENTERS
4. ◀ ONE-WAY AMBER MARKER AT 40' CENTERS

◁ ONE-WAY CRYSTAL MARKER
◀ ONE-WAY AMBER MARKER

DELINEATORS

RECOVERABLE DELINEATOR

DOUBLE REFLECTOR RECOVERABLE DELINEATOR

10' 30' 10' 30' 10' 30' 10'
80'

▶ ONE WAY YELLOW R.R.P.M.
▷ ONE WAY WHITE R.R.P.M.

USER NAME = $USER$	DESIGNED -	REVISED -
	DRAWN -	REVISED -
PLOT SCALE = 1:100	CHECKED -	REVISED -
PLOT DATE = 12/16/2019	DATE -	REVISED -

STATE OF ILLINOIS
DEPARTMENT OF TRANSPORTATION

PROPOSED PAVEMENT MARKINGS

SCALE: | SHEET 15 OF 18 SHEETS | STA. | TO STA.

F.A.P. RTE.	SECTION	COUNTY	TOTAL SHEETS	SHEET NO.
318		PEORIA	180	123
		CONTRACT NO. 68C98		
	ILLINOIS FED. AID PROJECT			

72[(7,7-1,6-1)RS-2(7-2,3)RS]

MODEL: Default
FILE NAME: pw:\\ahanroom.dot.illinois.gov:PWIDOT\Documents\IDOT Offices\District 4\Projects\D4 68C98\CADData\CADSheets\Final Pavement Markings.dgn

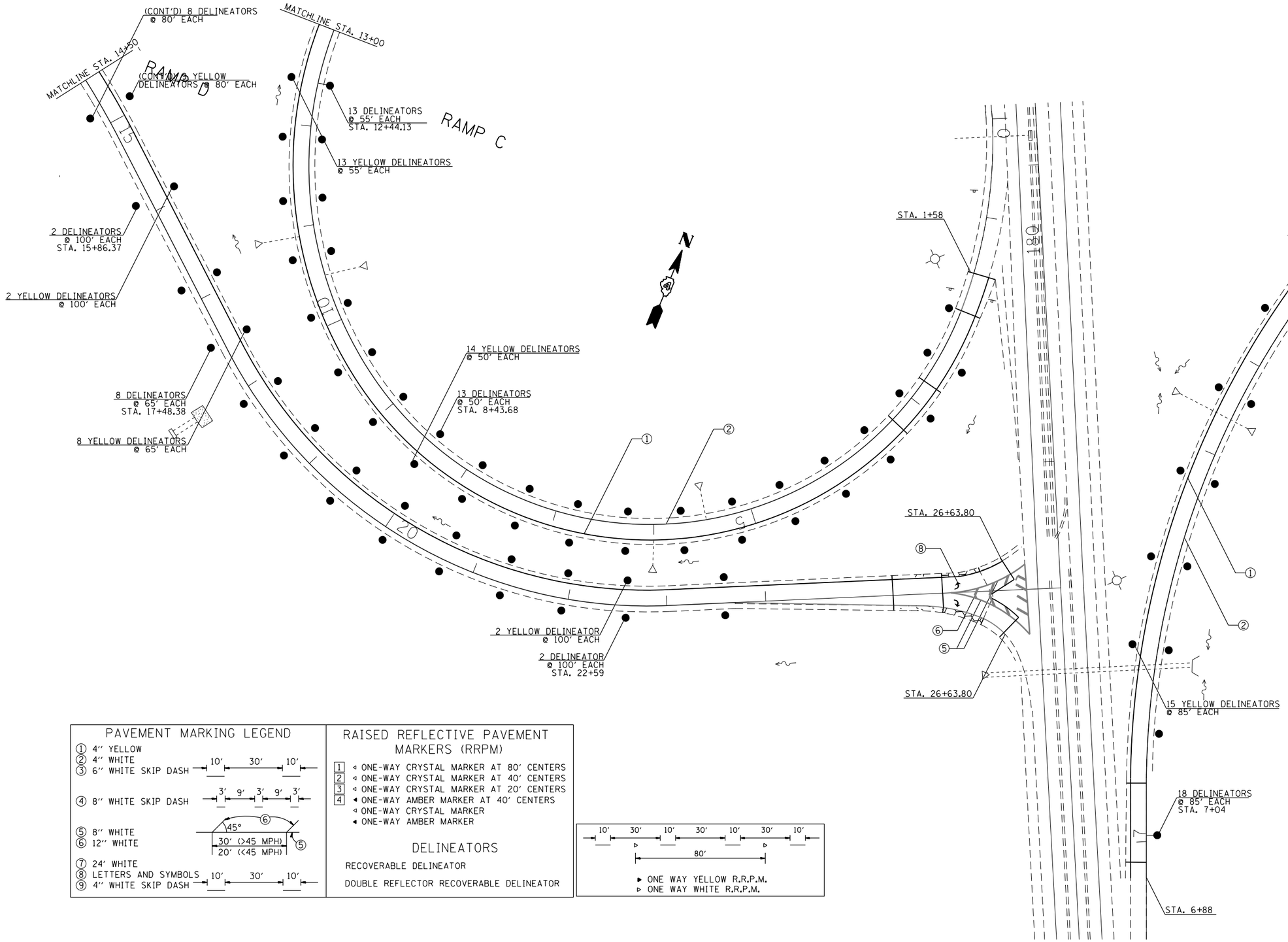

PAVEMENT MARKING LEGEND

1. 4" YELLOW
2. 4" WHITE
3. 6" WHITE SKIP DASH — 10' 30' 10'
4. 8" WHITE SKIP DASH — 3' 9' 3' 9' 3'
5. 8" WHITE
6. 12" WHITE — 45°, 30' (>45 MPH), 20' (<45 MPH)
7. 24" WHITE
8. LETTERS AND SYMBOLS
9. 4" WHITE SKIP DASH — 10' 30' 10'

RAISED REFLECTIVE PAVEMENT MARKERS (RRPM)

1. ◁ ONE-WAY CRYSTAL MARKER AT 80' CENTERS
2. ◁ ONE-WAY CRYSTAL MARKER AT 40' CENTERS
3. ◁ ONE-WAY CRYSTAL MARKER AT 20' CENTERS
4. ◀ ONE-WAY AMBER MARKER AT 40' CENTERS

◁ ONE-WAY CRYSTAL MARKER
◀ ONE-WAY AMBER MARKER

DELINEATORS

RECOVERABLE DELINEATOR

DOUBLE REFLECTOR RECOVERABLE DELINEATOR

10' 30' 10' 30' 10' 30' 10' — 80'

▶ ONE WAY YELLOW R.R.P.M.
▷ ONE WAY WHITE R.R.P.M.

MODEL: Default
FILE NAME: pw:\\planroom.dot.illinois.gov:PWIDOT\Documents\IDOT Offices\District 4\Projects\D4_68C98\CADData\CADsheets\Final Pavement Markings.dgn

USER NAME = $USER$	DESIGNED -	REVISED -	
	DRAWN -	REVISED -	
PLOT SCALE = 1:100	CHECKED -	REVISED -	
PLOT DATE = 12/16/2019	DATE -	REVISED -	

STATE OF ILLINOIS
DEPARTMENT OF TRANSPORTATION

PROPOSED PAVEMENT MARKINGS

SCALE: | SHEET 16 OF 18 SHEETS | STA. | TO STA.

F.A.P. RTE.	SECTION	COUNTY	TOTAL SHEETS	SHEET NO.
318		PEORIA	180	124
		CONTRACT NO. 68C98		
	ILLINOIS	FED. AID PROJECT		

72[(7,7-1,6-1)RS-2(7-2,3)RS]

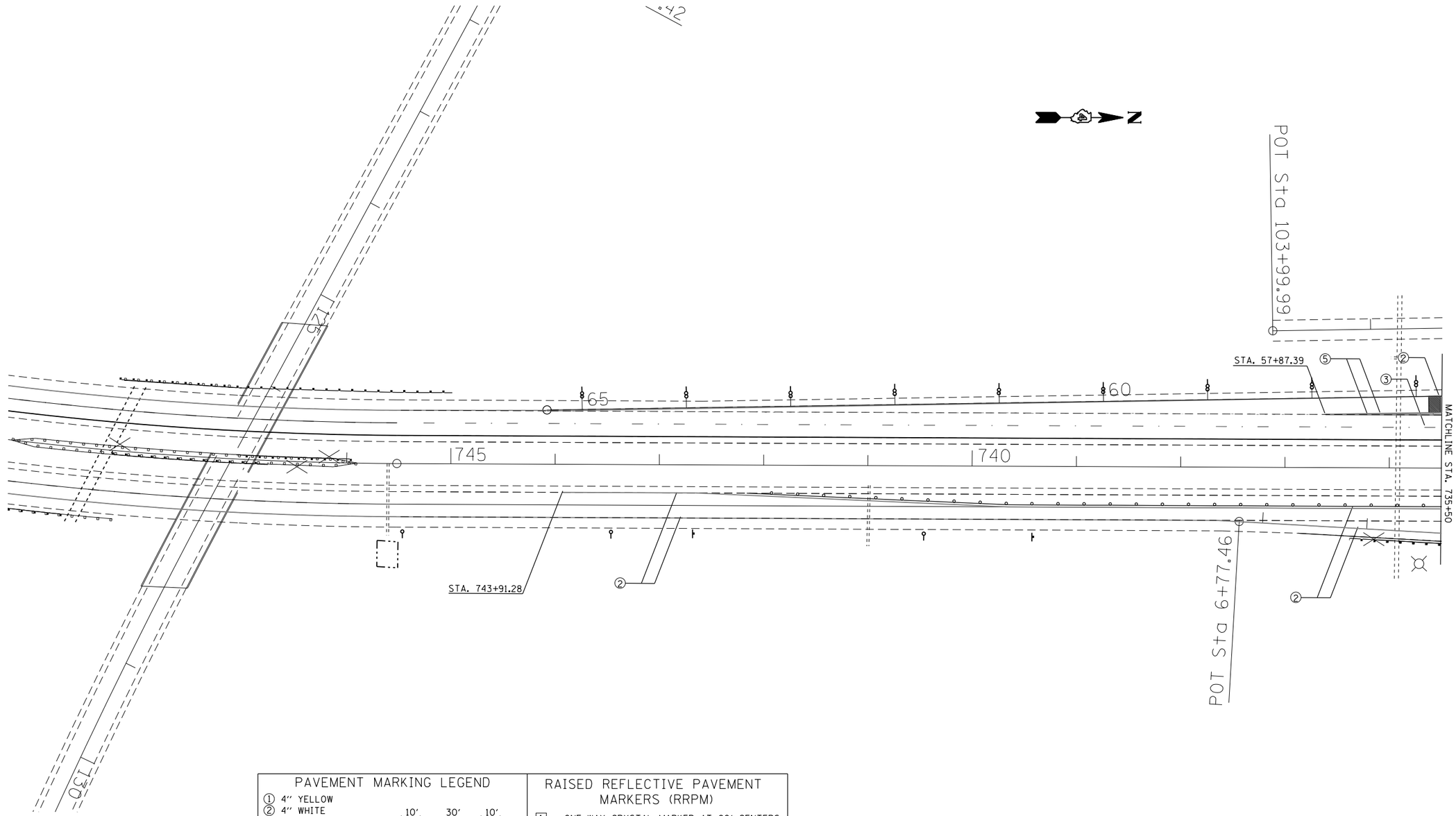

PAVEMENT MARKING LEGEND

① 4" YELLOW
② 4" WHITE
③ 6" WHITE SKIP DASH — 10' 30' 10'
④ 8" WHITE SKIP DASH — 3' 9' 3' 9' 3'
⑤ 8" WHITE
⑥ 12" WHITE — 45°; 30' (>45 MPH); 20' (<45 MPH)
⑦ 24' WHITE
⑧ LETTERS AND SYMBOLS
⑨ 4" WHITE SKIP DASH — 10' 30' 10'

RAISED REFLECTIVE PAVEMENT MARKERS (RRPM)

1 ◁ ONE-WAY CRYSTAL MARKER AT 80' CENTERS
2 ◁ ONE-WAY CRYSTAL MARKER AT 40' CENTERS
3 ◁ ONE-WAY CRYSTAL MARKER AT 20' CENTERS
4 ◀ ONE-WAY AMBER MARKER AT 40' CENTERS
◁ ONE-WAY CRYSTAL MARKER
◀ ONE-WAY AMBER MARKER

DELINEATORS

RECOVERABLE DELINEATOR

DOUBLE REFLECTOR RECOVERABLE DELINEATOR

10' 30' 10' 30' 10' 30' 10' — 80'

▸ ONE WAY YELLOW R.R.P.M.
▹ ONE WAY WHITE R.R.P.M.

MODEL: Default
FILE NAME: pw:\\planroom.dot.illinois.gov:PWIDOT\Documents\IDOT Offices\District 4\Projects\D4_68C98\Geometrics\1 Turn Design

USER NAME = $USER$	DESIGNED -	REVISED -
	DRAWN -	REVISED -
PLOT SCALE = 1:100.824	CHECKED -	REVISED -
PLOT DATE = 12/16/2019	DATE -	REVISED -

STATE OF ILLINOIS
DEPARTMENT OF TRANSPORTATION

PROPOSED PAVEMENT MARKINGS

SCALE: | SHEET 17 OF 18 SHEETS | STA. | TO STA.

F.A.P. RTE.	SECTION	COUNTY	TOTAL SHEETS	SHEET NO.
318		PEORIA	180	125
		CONTRACT NO. 68C98		
	ILLINOIS	FED. AID PROJECT		

72[(7.7-1.6-1)RS-2(7-2.3)RS]

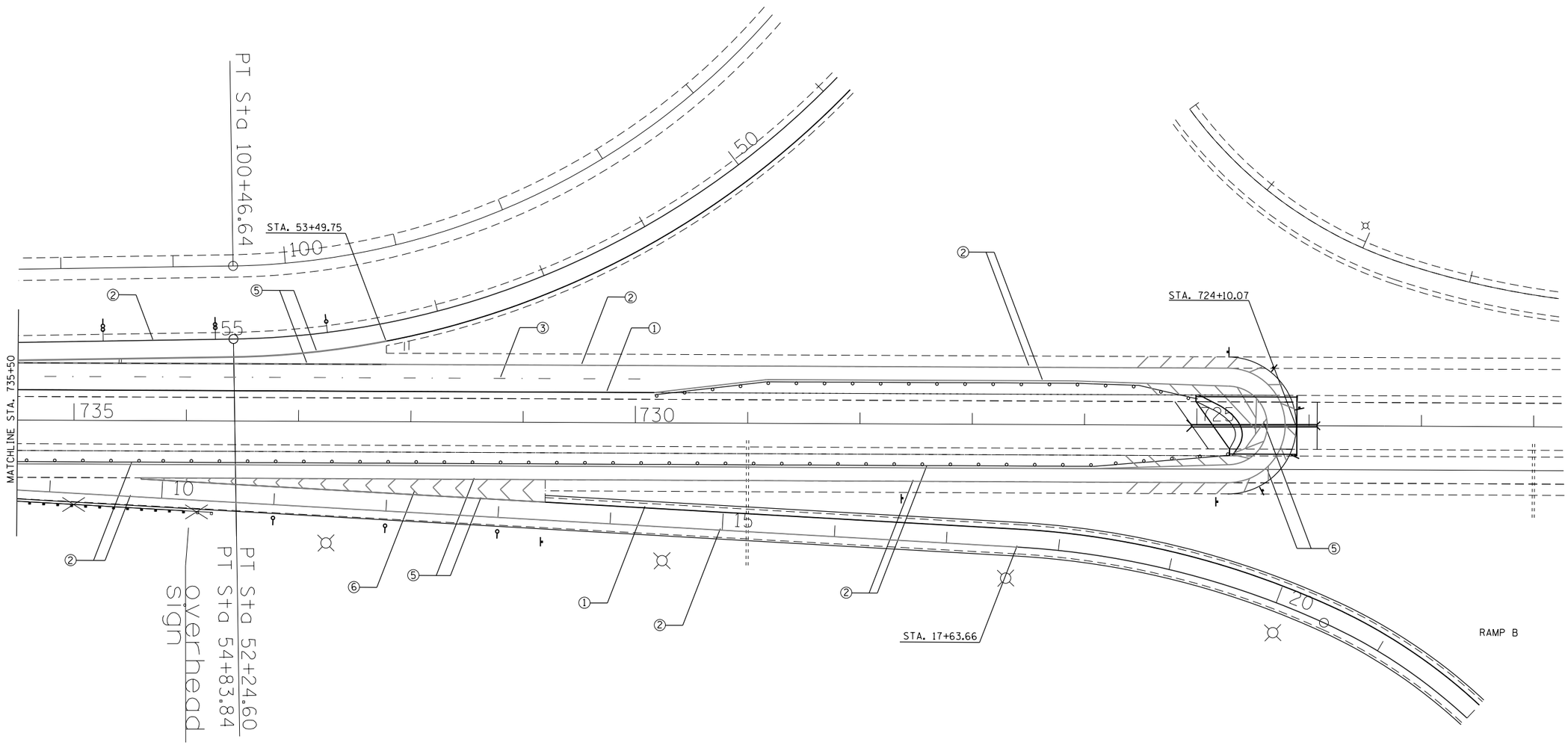

PAVEMENT MARKING LEGEND

① 4" YELLOW
② 4" WHITE
③ 6" WHITE SKIP DASH — 10' 30' 10'
④ 8" WHITE SKIP DASH — 3' 9' 3' 9' 3'
⑤ 8" WHITE
⑥ 12" WHITE — 45° — 30' (>45 MPH) — 20' (<45 MPH)
⑦ 24' WHITE
⑧ LETTERS AND SYMBOLS
⑨ 4" WHITE SKIP DASH — 10' 30' 10'

RAISED REFLECTIVE PAVEMENT MARKERS (RRPM)

1 ◁ ONE-WAY CRYSTAL MARKER AT 80' CENTERS
2 ◁ ONE-WAY CRYSTAL MARKER AT 40' CENTERS
3 ◁ ONE-WAY CRYSTAL MARKER AT 20' CENTERS
4 ◀ ONE-WAY AMBER MARKER AT 40' CENTERS
◁ ONE-WAY CRYSTAL MARKER
◀ ONE-WAY AMBER MARKER

DELINEATORS

RECOVERABLE DELINEATOR

DOUBLE REFLECTOR RECOVERABLE DELINEATOR

10' 30' 10' 30' 10' 30' 10' — 80'

▶ ONE WAY YELLOW R.R.P.M.
▷ ONE WAY WHITE R.R.P.M.

MODEL: Default
FILE NAME: pw:\\dlanroom.dot.illinois.gov:PWIDOT\Documents\IDOT Offices\District 4\Projects\D4_68C98\Geomet\Fcs\ Turn Design

USER NAME = sUSERs	DESIGNED -	REVISED -	
	DRAWN -	REVISED -	
PLOT SCALE = 1:100.824	CHECKED -	REVISED -	
PLOT DATE = 12/16/2019	DATE -	REVISED -	

STATE OF ILLINOIS
DEPARTMENT OF TRANSPORTATION

PROPOSED PAVEMENT MARKINGS

SCALE: | SHEET 18 OF 18 SHEETS | STA. | TO STA.

F.A.P. RTE.	SECTION	COUNTY	TOTAL SHEETS	SHEET NO.
318		PEORIA	180	126
		CONTRACT NO. 68C98		
	ILLINOIS	FED. AID PROJECT		

72[(7.7-1,6-1)RS-2(7-2,3)RS]

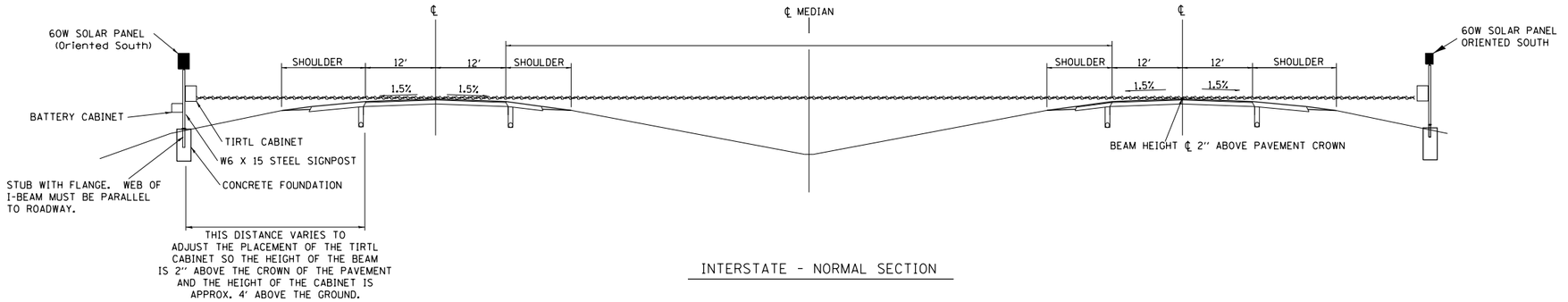

INTERSTATE - NORMAL SECTION

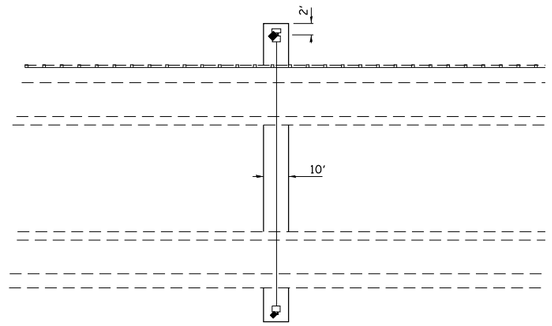

Weed Barrier - PCC concrete shal be placed as shown 8' to 10' wide and 4" thick running from 2' behind post to post.

NOTES:

1. SYSTEM CONSISTS OF TWO W6 X 15 I-BEAM SIGNPOSTS WITH CONCRETE FOUNDATION AND A FLANGE WITH BREAKAWAY BOLTS
2. THE I-BEAMS ARE 12' LONG AND DRILLED AS PER THE I-BEAM DETAIL TO ACCOMODATE A PIPE TO ALLOW THE MOUNTING OF THE SOLAR PANEL.
3. THE WEB OF THE I-BEAM IS TO BE PLACED PARALLEL TO THE LANES.
4. THE TWO POSTS MUST BE PLACED DIRECTLY ACROSS FROM EACH OTHER AND PERPENDICULAR TO THE LANES.
5. TWO POSTS ARE REQUIRED LOCATED AS PER THE ENGINEER AND DRAWING.
6. THE CABINETS ARE ATTACHED TO THE I-BEAM USING 8" GALVANIZED J-BOLTS.
7. THE BOTTOM OF THE CABINET HEIGHT MUST BE NO LOWER THAN 4' ABOVE THE GROUND AND BE ABLE TO VIEW ACROSS ALL LANES AT THE CROWN OF THE PAVEMENT.
8. THE IDOT OFFICE OF PLANNING AND PROGRAMMING DATA MANAGEMENT LAB RICH MARX (217-782-2065) SHALL BE NOTIFIED TWO WEEKS PRIOR TO THE LAYOUT AND SHALL BE PRESENT DURING THE PLACEMENT OF THE POST FOUNDATIONS.

TIRTL TRAFFIC COUNTER
SCHEDULE OF QUANTITIES
(FOR INFORMATION ONLY)

CODE NUMBER	ITEM	UNIT	QUANTITY
72700100	STRUCTURAL STEEL SIGN SUPPORT - BREAKAWAY	POUND	520
73400100	CONCRETE FOUNDATIONS	CU YD	1.4
X0323388	TRAFFIC COUNTER SYSTEM (INCLUDES BELOW)	EACH	1
	TIRTL TRAFFIC DATA COLLECTION SYSTEM INCLUDES:		
	Sierra Wireless Modem RV-50	EACH	1
	Panorama Low Profile LTE MiMo LGAM-BC3G-26-3SP Antenna	EACH	1
	TIRTL CABINET 15" X 27" X 16"	EACH	2
	BATTERY CABINET 16.5" X 16" X 11.5" BBA1M w/ #2 Police Lock	EACH	1
	SOLAR PANEL 60 W 12 VDC with Bracket and junction box	EACH	2
	TIRTL TRAFFIC COUNTER	EACH	1
	SUNSAVER SOLAR CHARGE REGULATOR 10 AMP 12 VDC	EACH	2
	BATTERY - 33 AH ABSORBED ELECTROLYTE 8" X 5.5" X 7" (DEEP CYCLE	EACH	1
	BATTERY -104AH ABSORBED ELECTROLYTE 10" X 6" X 8" (DEEP CYCLE)	EACH	1

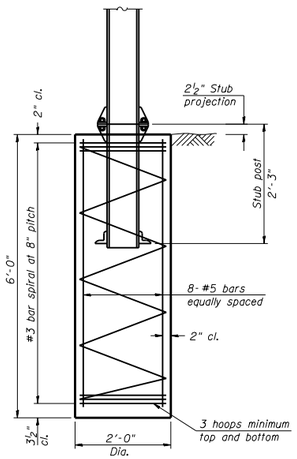

FOUNDATION SECTION

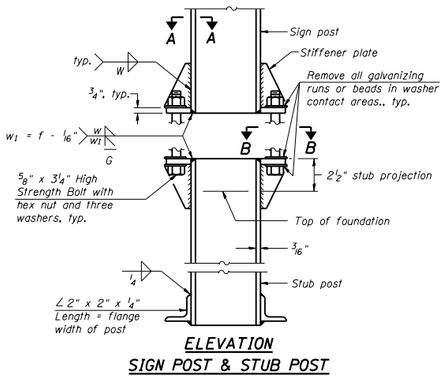

ELEVATION
SIGN POST & STUB POST

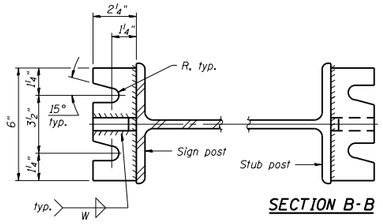

SECTION A-A

SECTION B-B

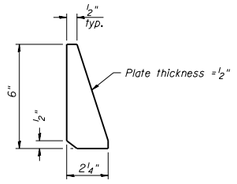

STIFFENER PLATE DETAIL

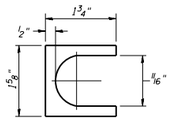

SHIM DETAIL

Furnish two 0.01" thick and two 0.03" thick stainless steel or brass (ASTM B36) shims per post.

GENERAL NOTES

Posts shall be plumbed by using shims with post-to-stub post connection bolts snug tight only. Final tightening of all High Strength Bolts shall be in accordance with Article 727.05 and threads at the junction of the bolt and nut shall be burred or center punched to prevent the nut from loosening.

LOADING: 80 m.p.h. wind with 30% gust factor, normal to sign.

DESIGN STRESSES:
Structural steel - 20,000 p.s.i.
Reinforcing steel - 20,000 p.s.i.
Concrete - 1,400 p.s.i.
Footing soil pressure - 2,000 p.s.f.

After fabrication, the post and upper 6", min. of the stub post shall be hot-dip galvanized in accordance with AASHTO M111. All bolts, nuts and washers shall be hot-dip galvanized in accordance with AASHTO M232.

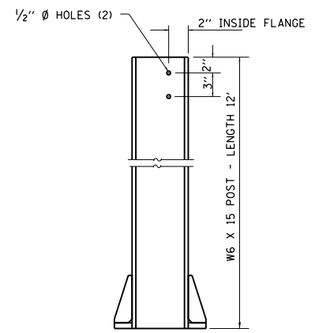

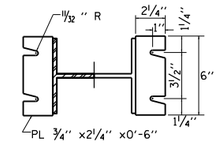

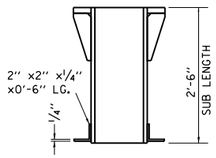

BREAK-AWAY WIDE FLANGE STEEL POST DETAILS

FILE NAME = pw:\\planroom.dot.illinois.gov:PWIDOT\Documents\IDOT Offices\District 4\Projects\D4-68C98\Data\CADsheets\TIRTL detail3.dgn	USER NAME = $USER$	DESIGNED -	REVISED -
	PLOT SCALE = 1:100	CHECKED -	REVISED -
Default	PLOT DATE = 12/16/2019	DATE -	REVISED -

STATE OF ILLINOIS
DEPARTMENT OF TRANSPORTATION

TRAFFIC COUNTER SYSTEM

SCALE: | SHEET 1 OF 1 SHEETS | STA. | TO STA.

F.A.P. RTE.	SECTION	COUNTY	TOTAL SHEETS	SHEET NO.
318		PEORIA	180	127
		CONTRACT NO. 68C98		
		ILLINOIS FED. AID PROJECT		

72[(7,7-1,6-1)RS-2(7-2,3)RS]

CONSTRUCTION NOTES
1. EXISTING UTILITY LOCATION INFORMATION IS NOT SHOWN ON THE PLAN SHEETS. THE CONTRACTOR SHALL FIELD VERIFY THE LOCATION OF ALL UTILITIES AND PRIVATELY OWNED FACILITIES PRIOR TO THE INSTALLATION OF ANY COMPONENTS. THE CONTRACTOR SHALL VERIFY EXISTING FIELD CONDITIONS AND TERRAIN PRIOR TO COMMENCING WORK ON THE PROJECT.
2. THE LOCATION OF ALL UTILITIES AND PRIVATELY OWNED FACILITIES SHALL BE FIELD VERIFIED BY THE CONTRACTOR PRIOR TO THE INSTALLATION OF ANY COMPONENTS.
3. THE CONTRACTOR SHALL BE RESPONSIBLE FOR LOCATING EXISTING IDOT ELECTRICAL FACILITIES AT HIS/HER OWN EXPENSE IF REQUIRED. THE CONTRACTOR SHALL ALSO BE LIABLE FOR ANY DAMAGE TO IDOT FACILITIES RESULTING FROM INACCURATE LOCATING.
4. ELECTRICAL WORK SHALL CONFORM WITH NATIONAL, STATE, AND LOCAL CODES.
5. THE CONTRACTOR SHALL PROVIDE ELECTRICAL CABLE SLACK IN ACCORDANCE WITH ARTICLE 873.03 UNLESS SPECIFIED OTHERWISE.
6. ALL SURPLUS MATERIALS SHALL BE DISPOSED OF IN ACCORDANCE WITH ARTICLE 202.03 OF THE STANDARD SPECIFICATION.
7. ANY MAINTENANCE OF EXISTING ELECTRICAL FACILITIES WILL BE CONSIDERED EXTRA WORK IN ACCORDANCE WITH ARTICLE 109.04 OF THE STANDARD SPECIFICATIONS.
8. THE EXISTING LIGHTING AND TRAFFIC SIGNALS SHALL REMAIN IN OPERATION DURING THE INSTALLATION OF THE PROPOSED LIGHTING AND TRAFFIC SIGNAL COMPONENTS.
9. THE REMOVAL OF EXISTING ITEMS AT IL 6 & ALLEN RD AND IL 6 & IL 29 (LUMINAIRES, WIRING, TRAFFIC SIGNAL CONTROLLER, BATTERY BACKUP, ETC.) WILL NOT BE PAID FOR SEPARATELY, BUT SHALL BE INCLUDED IN THE UNIT BID PRICES FOR THE PROPOSED ITEMS.
10. THE CONTRACTOR SHALL FURNISH AND INSTALL NEW FUSEHOLDERS, FUSES, SURGE ARRESTORS, AND POLE WIRING FOR EACH LUMINAIRE. THE COST OF THIS WORK SHALL BE INCLUDED IN THE COST OF THE PROPOSED LUMINAIRES.
11. THE CONTRACTOR SHALL REMOVE HPS LAMPS FROM THE EXISTING FIXTURES PRIOR TO DISPOSAL. THE HPS LAMP SHALL BE DISPOSED OF AT A CERTIFIED RECYCLING FACILITY. THE COST OF THIS WORK SHALL BE INCLUDED IN THE COST OF THE PROPOSED LUMINAIRES.
12. TEMPORARY LIGHTING SHALL BE REMOVED UPON COMPLETION OF THE PROJECT. THE CONTRACTOR SHALL DELIVER THE LUMINAIRES AND BRACKETING TO IDOT DISTRICT 4 TRAFFIC BUILDING 1025 W. DETWEILLER DR. PEORIA, IL 61615.
13. THE TRAFFIC SIGNAL CONTROLLER SHALL BE ORIENTED SO THAT THE DOOR IS FACING AWAY FROM TRAFFIC.
14. REMOVAL OF EXISTING ITEMS (CCTV CAMERAS, TRAFFIC SIGNAL CONTROLLER CABINETS, BATTERY BACKUP SYSTEMS, ETC.) WILL NOT BE PAID FOR SEPARATELY, BUT SHALL BE INCLUDED IN THE UNIT BID PRICES FOR THE PROPOSED ITEMS.
15. THE CONTRACTOR SHALL DELIVER ALL TRAFFIC SIGNAL CONTROLLER CABINETS AND BATTERY BACKUP SYSTEMS TO THE CITY OF PEORIA DRIES LANE MAINTENANCE FACILITY. THE CONTRACTOR SHALL NOTIFY IRV LEBLANC, AT (309) 303-7440 FORTY-EIGHT HOURS IN ADVANCE OF EQUIPMENT DELIVERY.
16. THE CONTRACTOR SHALL GROUND/SAFETY BOND ALL TRAFFIC SIGNAL AND LIGHTING STRUCTURES, EXPOSED METALLIC CONDUIT, HANDHOLES, CABINETS, ETC. IN ACCORDANCE WITH NEC REQUIREMENTS. THE COST OF THIS WORK SHALL BE INCLUDED THE COST OF THE PROPOSED ELECTRICAL CABLE.

HIGHWAY LIGHTING
SHEET 1 OF 33

MODEL: Default
FILE NAME: pw:\\planroom.dot.illinois.gov:PWIDOTHDocuments\IDOT Offices\District 4\Projects\04 68C98\CADData\CADsheets\IL 6 Lighting (FINAL 12-12-19).dgn

USER NAME = $USER$	DESIGNED -	REVISED -	
	DRAWN -	REVISED -	
PLOT SCALE = 1:301.946	CHECKED -	REVISED -	
PLOT DATE = 12/16/2019	DATE -	REVISED -	

STATE OF ILLINOIS
DEPARTMENT OF TRANSPORTATION

HIGHWAY LIGHTING CONSTRUCTION NOTES

SCALE: | SHEET OF SHEETS | STA. | TO STA.

F.A.P. RTE.	SECTION	COUNTY	TOTAL SHEETS	SHEET NO.
318	72[(7,7-1,6-1)RS-2; (7-2,3)RS]	PEORIA	180	128
		CONTRACT NO. 68C98		
	ILLINOIS	FED. AID PROJECT		

72[(7,7-1,6-1)RS-2(7-2,3)RS]

REV. 2/11/20

ITEM DESCRIPTION	UNIT	TOTAL QTY.	IL 6 & ALLEN RD. INTERCHANGE	IL 6 & IL 40 (KNOXVILLE AVE.) INTERCHANGE	IL 6 & IL 29 INTERCHANGE
ELECTRIC SERVICE INSTALLATION	EACH	1.0		1.0	
UNDERGROUND CONDUIT, PVC, 2" DIA.	FOOT	735.0		735.0	
UNDERGROUND CONDUIT, PVC, 3" DIA.	FOOT	285.0		285.0	
HANDHOLE, PORTLAND CEMENT CONCRETE	EACH	3.0		3.0	
UNIT DUCT, 600V, 4-1C NO.8, 1/C NO.8 GROUND, (XLP-TYPE USE), 1 1/4" DIA. POLYETHYLENE	FOOT	1770.5		1770.5	
UNIT DUCT, 600V, 2-1C NO.8, 1/C NO.8 GROUND, (XLP-TYPE USE), 1 1/4" DIA. POLYETHYLENE	FOOT	6344.5		6344.5	
ELECTRIC CABLE IN CONDUIT, 600V (XLP-TYPE USE) 1/C NO. 8	FOOT	1533.0		1533.0	
AERIAL CABLE, 2-1/C NO. 6 WITH MESSENGER WIRE	FOOT	233.0			233.0
LUMINAIRE, LED, ROADWAY, OUTPUT DESIGNATION G	EACH	47.0	33.0		14.0
LUMINAIRE, LED, ROADWAY, OUTPUT DESIGNATION H	EACH	59.0	28.0	23.0	8.0
LUMINAIRE, LED, UNDERPASS, WALLMOUNT, OUTPUT DESIGNATION E	EACH	4.0	4.0		
LUMINAIRE, LED, SIGN LIGHTING, OUTPUT DESIGNATION D	EACH	4.0		4.0	
LUMINAIRE, LED, SIGN LIGHTING, OUTPUT DESIGNATION E	EACH	4.0		2.0	2.0
LIGHTING CONTROLLER, PEDESTAL MOUNTED, 480VOLT, 60AMP	EACH	2.0		1.0	1.0
LIGHT POLE, GALVANIZED STEEL, 45 FT. M.H., TENON MOUNT	EACH	24.0		19.0	5.0
LIGHT POLE, GALVANIZED STEEL, 45 FT. M.H., TENON MOUNT-TWIN	EACH	3.0		2.0	1.0
LIGHT POLE FOUNDATION, METAL, 15" BOLT CIRCLE, 8 5/8" X 8'	EACH	21.0		21.0	
BREAKAWAY DEVICE, COUPLING WITH STAINLESS STEEL SCREEN	EACH	108.0		84.0	24.0
DRILL EXISTING HANDHOLE	EACH	6.0		6.0	
TRAFFIC SIGNAL BACKPLATE, RETROREFLECTIVE	EACH	7.0	7.0		
REMOVE LUMINAIRE, COMPLETE	EACH	78.0	65.0		13
TEMPORARY TRAFFIC SIGNAL, WOOD POLE	EACH	1.0			1.0
CLOSED CIRCUIT TELEVISION DOME CAMERA, HD	EACH	1.0	1.0		
FULL-ACTUATED CONTROLLER AND TYPE IV CABINET, SPECIAL	EACH	2.0	2.0		
TRAFFIC SIGNAL BATTERY BACKUP SYSTEM	EACH	2.0	2.0		
VIDEO VEHICLE DETECTION SYSTEM	EACH	2.0	2.0		
REMOVAL OF LIGHTING UNIT, NO SALVAGE	EACH	33.0		27.0	6.0
LUMINAIRE MOUNTING BRACKET, SPECIAL	EACH	27.0		21.0	6.0
INDEPENDENT LUMINAIRE TESTING	L SUM	1.0	0.34	0.33	0.33

HIGHWAY LIGHTING
SHEET 2 OF 33

MODEL: Default
FILE NAME: pw:\\planroom.dot.illinois.gov:PWIDOT\Documents\IDOT Offices\District 4\Projects\D4_68C98\CADData\CADsheets\IL 6 Lighting (FINAL 12-12-19).dgn

USER NAME = $USER$	DESIGNED -	REVISED -	STATE OF ILLINOIS DEPARTMENT OF TRANSPORTATION
	DRAWN -	REVISED -	
PLOT SCALE = 1:301.946	CHECKED -	REVISED -	
PLOT DATE = 12/16/2019	DATE -	REVISED -	

PROPOSED LIGHTING SYSTEM SCHEDULE OF QUANTITIES

SCALE: SHEET OF SHEETS STA. TO STA.

F.A.P. RTE.	SECTION	COUNTY	TOTAL SHEETS	SHEET NO.
318	72[(7,7-1,6-1)RS-2; (7-2,3)RS]	PEORIA	180	129

CONTRACT NO. 68C98

ILLINOIS FED. AID PROJECT

72[(7,7-1,6-1)RS-2(7-2,3)RS]

REV. 2/11/20

N

0 50 100
SCALE IN FEET

BILL OF MATERIALS - ALLEN RD. & TOWNLINE RD. LIGHTING		
ITEM DESCRIPTION	UNIT	TOTAL QTY.
UNDERGROUND CONDUIT, PVC, 2" DIA.	FOOT	260.0
ELECTRIC CABLE IN CONDUIT, 600V (XLP-TYPE USE) 1/C NO. 6	FOOT	2028.0
LUMINAIRE, SODIUM VAPOR, HORIZONTAL MOUNT, 400 WATT	EACH	3.0
LIGHT POLE, GALVANIZED STEEL, 50 FT. M.H., 15 FT. MAST ARM	EACH	3.0
LIGHT POLE FOUNDATION, 30" DIAMETER	FOOT	21.0
BREAKAWAY DEVICE, TRANSFORMER BASE, 15 INCH BOLT CIRCLE	EACH	3.0
DRILL EXISTING HANDHOLE	EACH	2.0

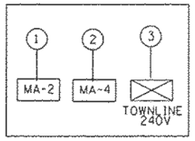

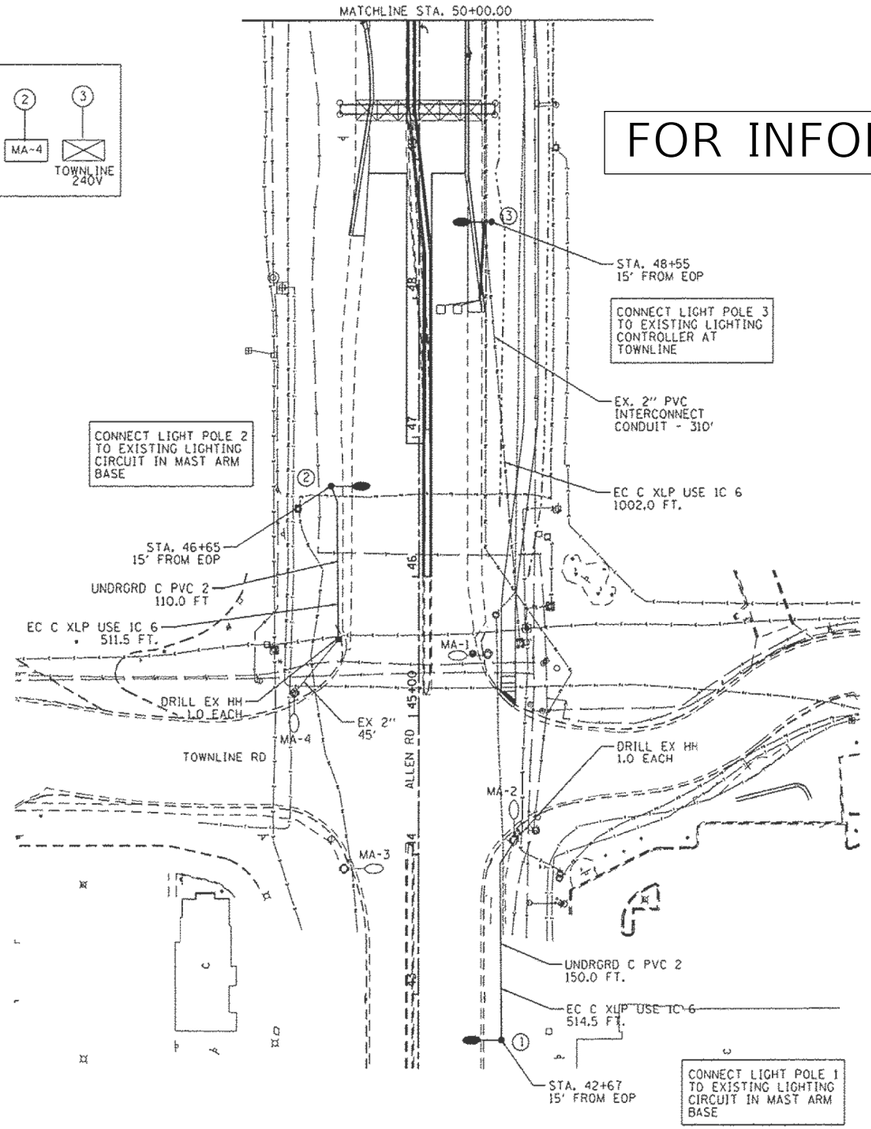

FOR INFORMATION ONLY

N

0 50 100
SCALE IN FEET

BILL OF MATERIALS - ALLEN RD. & IL 6 NB RAMPS A&B		
ITEM DESCRIPTION	UNIT	TOTAL QTY.
UNDERGROUND CONDUIT, PVC, 2" DIA.	FOOT	579.0
UNDERGROUND CONDUIT, PVC, 2 1/2" DIA.	FOOT	96.0
UNIT DUCT, 600V, 2-1C NO.8, 1/C NO.8 GROUND, (XLP-TYPE USE), 3/4" DIA. POLYETHYLENE	FOOT	175.0
UNIT DUCT, 600V, 2-1C NO.4, 1/C NO.6 GROUND, (XLP-TYPE USE), 1" DIA. POLYETHYLENE	FOOT	670.0
ELECTRIC CABLE IN CONDUIT, 600V (XLP-TYPE USE) 1/C NO. 6	FOOT	4053.3
LUMINAIRE, SODIUM VAPOR, HORIZONTAL MOUNT, 250 WATT	EACH	2.0
LUMINAIRE, SODIUM VAPOR, HORIZONTAL MOUNT, 400 WATT	EACH	8
LIGHT POLE, GALVANIZED STEEL, 45 FT. M.H., 15 FT. MAST ARM	EACH	1.0
LIGHT POLE, GALVANIZED STEEL, 50 FT. M.H., 15 FT. MAST ARM	EACH	5.0
LIGHT POLE FOUNDATION, 30" DIAMETER	FOOT	35.0
BREAKAWAY DEVICE, TRANSFORMER BASE, 15 INCH BOLT CIRCLE	EACH	5.0
DRILL EXISTING HANDHOLE	EACH	1.0

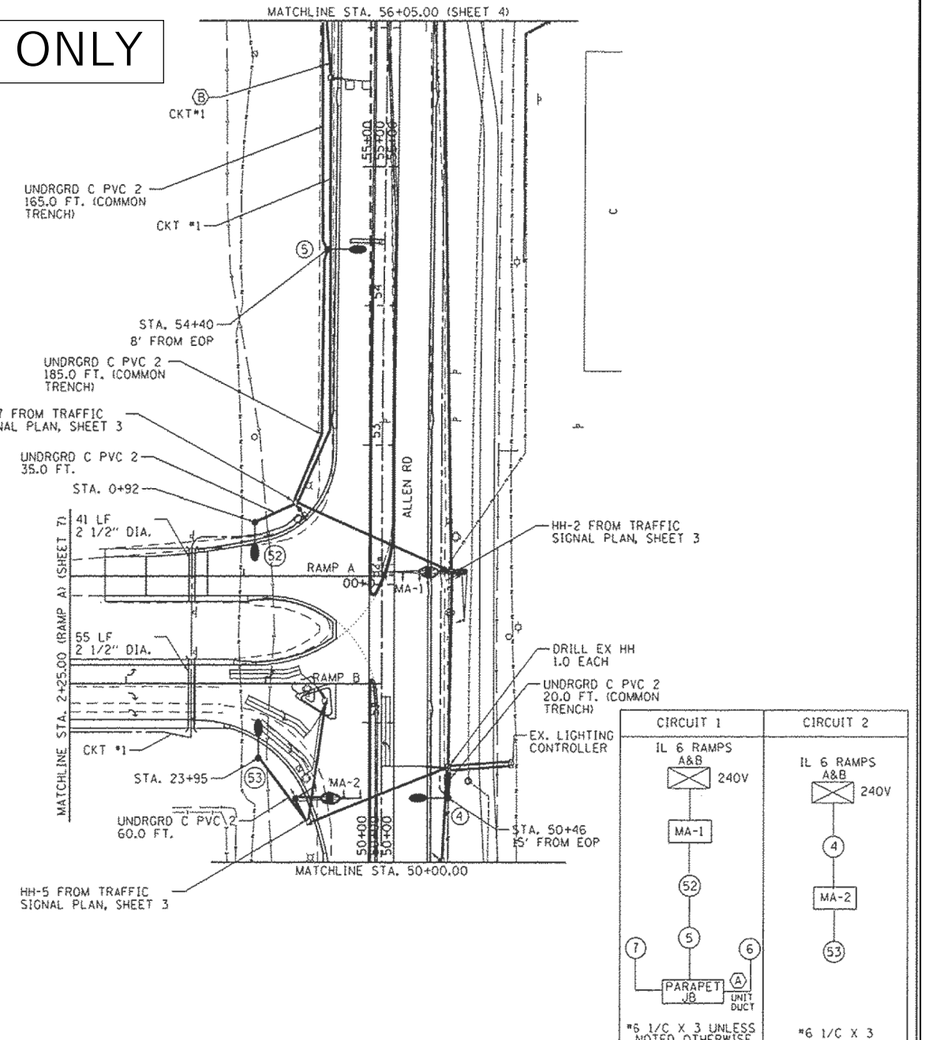

CIRCUIT 1	CIRCUIT 2
IL 6 RAMPS A&B	IL 6 RAMPS A&B
240V	240V
MA-1	4
52	MA-2
5	53
7 6	
PARAPET JB, A UNIT DUCT	
#6 1/C X 3 UNLESS NOTED OTHERWISE	#6 1/C X 3

FILE NAME = S:\237\2013\2371809.00\Allen\Rd\PNI\CADD\Default	USER NAME = bswanson	DESIGNED -	REVISED -
	CADD Sheets\0460603-sht-lighting 03.dgn	DRAWN -	REVISED -
	PLOT SCALE = 100.0000 ' / in.	CHECKED -	REVISED -
	PLOT DATE = 1/29/2014 12:12:12 PM	DATE -	REVISED -

STATE OF ILLINOIS
DEPARTMENT OF TRANSPORTATION

ALLEN ROAD IMPROVEMENTS
LIGHTING – ALLEN ROAD

SCALE: | SHEET 3 OF 19 SHEETS | STA. | TO STA.

F.A.U. RTE.	SECTION	COUNTY	TOTAL SHEETS	SHEET NO.
6584	105; 172-7HB)BY	PEORIA	487	271
6585		CONTRACT NO. 68683		
		ILLINOIS	FED. AID PROJECT	

HIGHWAY LIGHTING SHEET 3 OF 33

	USER NAME = $USER$	DESIGNED -	REVISED -
		DRAWN -	REVISED -
	PLOT SCALE = 1:301.946	CHECKED -	REVISED -
	PLOT DATE = 12/16/2019	DATE -	REVISED -

STATE OF ILLINOIS
DEPARTMENT OF TRANSPORTATION

EXISTING LIGHTING PLANS
IL 6 & ALLEN ROAD INTERCHANGE – PEORIA COUNTY

SCALE: | SHEET OF SHEETS | STA. | TO STA.

F.A.P. RTE.	SECTION	COUNTY	TOTAL SHEETS	SHEET NO.
318	72(7,7-1,6-1)RS-2; (7-2,3)RS]	PEORIA	180	130
		CONTRACT NO. 68C98		
		ILLINOIS	FED. AID PROJECT	

72[(7,7-1,6-1)RS-2(7-2,3)RS]

MODEL: Default
FILE NAME: pw:\\dalnroom.dot.illinois.gov:PWIDOT\Documents\IDOT Offices\District 4\Projects\D4 68C98\CADD\Data\CAD\sheets\IL 6 Lighting (FINAL 12-12-19).dgn

N

0 50 100
SCALE IN FEET

QUANTITIES IN THIS VIEW ARE INCLUDED IN THE BILL OF MATERIALS FOR ALLEN RD. & IL 6 NB RAMPS A&B AND ALLEN RD. & IL 6 SB RAMPS C&D

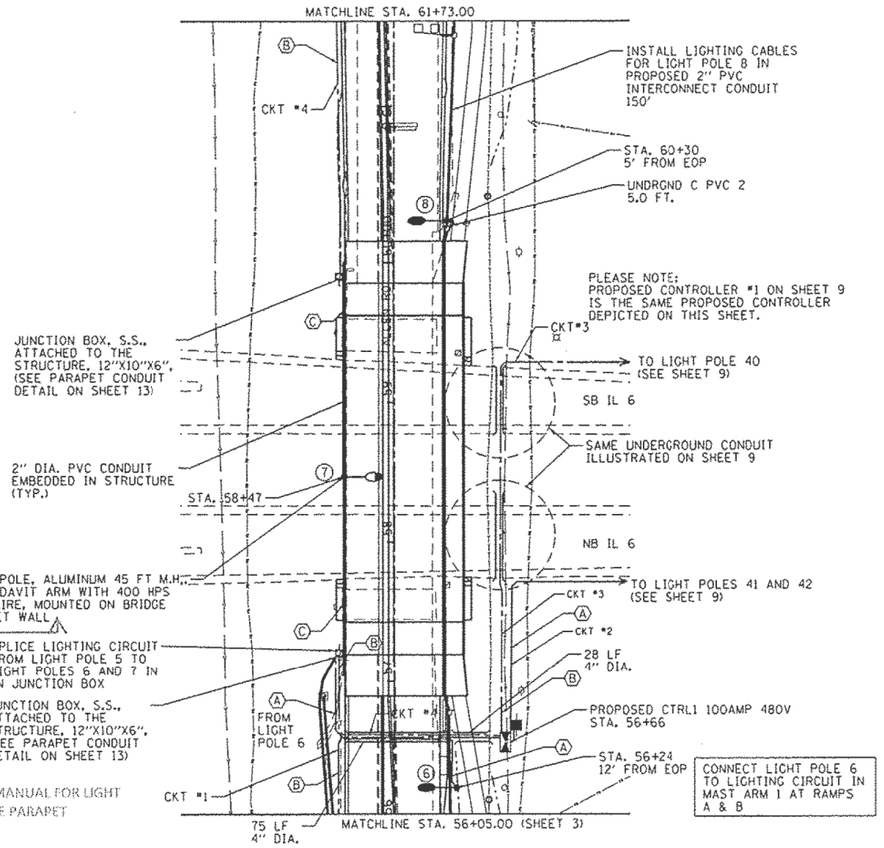

(SEE FIGURE 3.2.10-2 OF BDE MANUAL FOR LIGHT POLE MOUNTED ON CONCRETE PARAPET DETAILS)

FOR INFORMATION ONLY

N

0 50 100
SCALE IN FEET

BILL OF MATERIALS - ALLEN RD. & IL 6 SB RAMPS C&D		
ITEM DESCRIPTION	UNIT	TOTAL QTY.
UNDERGROUND CONDUIT, PVC, 2" DIA.	FOOT	470.0
UNDERGROUND CONDUIT, PVC, 2 1/2" DIA.	FOOT	85.0
CONDUIT EMBEDDED IN STRUCTURE, 2" DIA., PVC	FOOT	265.3
JUNCTION BOX, STAINLESS STEEL, ATTACHED TO STRUCTURE 12" X 10" X 6"	EACH	2.0
HANDHOLE, PORTLAND CEMENT CONCRETE	EACH	1.0
UNIT DUCT, 600V, 2-1C NO.4, 1/C NO.6 GROUND, (XLP-TYPE USE), 1" DIA. POLYETHYLENE	FOOT	937.3
ELECTRIC CABLE IN CONDUIT, 600V (XLP-TYPE USE) 1/C NO. 6	FOOT	4902.9
ELECTRIC CABLE IN CONDUIT, 600V (XLP-TYPE USE) 1/C NO. 4	FOOT	546.6
LUMINAIRE, SODIUM VAPOR, HORIZONTAL MOUNT, 250 WATT	EACH	2.0
LUMINAIRE, SODIUM VAPOR, HORIZONTAL MOUNT, 400 WATT	EACH	8
LIGHT POLE, GALVANIZED STEEL, 50 FT. M.H., 15 FT. MAST ARM	EACH	6.0
LIGHT POLE FOUNDATION, 30" DIAMETER	FOOT	42.0
BREAKAWAY DEVICE, TRANSFORMER BASE, 15 INCH BOLT CIRCLE	EACH	6.0

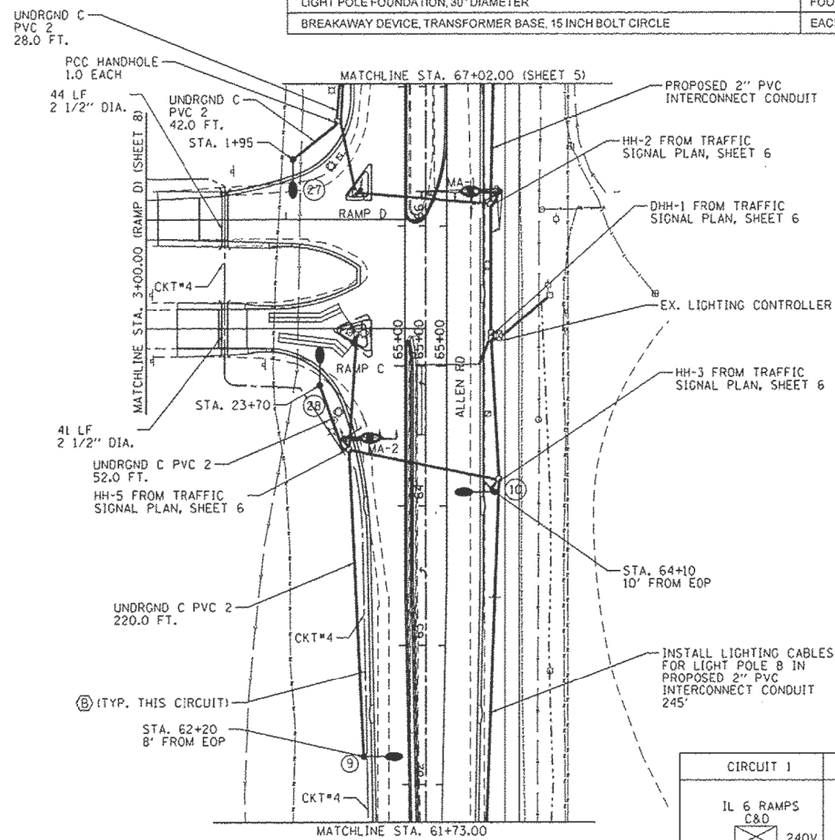

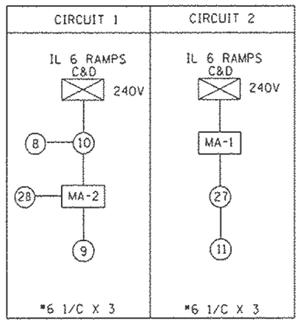

FILE NAME = S:\237\2013\2713009.00\AllenRdPhII\CADD\CADD Sheets\D468683-sht-lighting 04.dgn	USER NAME = bswanson	DESIGNED -	REVISED -	STATE OF ILLINOIS DEPARTMENT OF TRANSPORTATION	ALLEN ROAD IMPROVEMENTS LIGHTING - ALLEN ROAD	F.A.U. RTE.	SECTION	COUNTY	TOTAL SHEETS	SHEET NO.
		DRAWN -	REVISED -			6584	105: (72-7HBJBY	PEORIA	487	272
	PLOT SCALE = 100.0000 ' / in.	CHECKED -	REVISED -			6585		CONTRACT NO. 68683		
Default	PLOT DATE = 1/29/2014 12:12:12 PM	DATE -	REVISED -		SCALE: SHEET 4 OF 19 SHEETS STA. TO STA.			ILLINOIS FED. AID PROJECT		

HIGHWAY LIGHTING SHEET 4 OF 33

	USER NAME = $USER$	DESIGNED -	REVISED -	STATE OF ILLINOIS DEPARTMENT OF TRANSPORTATION	EXISTING LIGHTING PLANS - CONTINUED IL 6 & ALLEN ROAD INTERCHANGE - PEORIA COUNTY	F.A.P. RTE.	SECTION	COUNTY	TOTAL SHEETS	SHEET NO.
		DRAWN -	REVISED -			318	72[(7,7-1,6-1)RS-2; (7-2,3)RS]	PEORIA	180	131
	PLOT SCALE = 1:301.946	CHECKED -	REVISED -					CONTRACT NO. 68C98		
	PLOT DATE = 12/16/2019	DATE -	REVISED -		SCALE: SHEET OF SHEETS STA. TO STA.			ILLINOIS FED. AID PROJECT		

72[(7,7-1,6-1)RS-2(7-2,3)RS]

MODEL: Default
FILE NAME: pw:\\dlanroom.dot.illinois.gov:PWIDOT\Documents\IDOT Offices\District 4\Projects\D4 68C98\CADData\CADsheets\IL 6 Lighting (FINAL 12-12-19).dgn

FOR INFORMATION ONLY

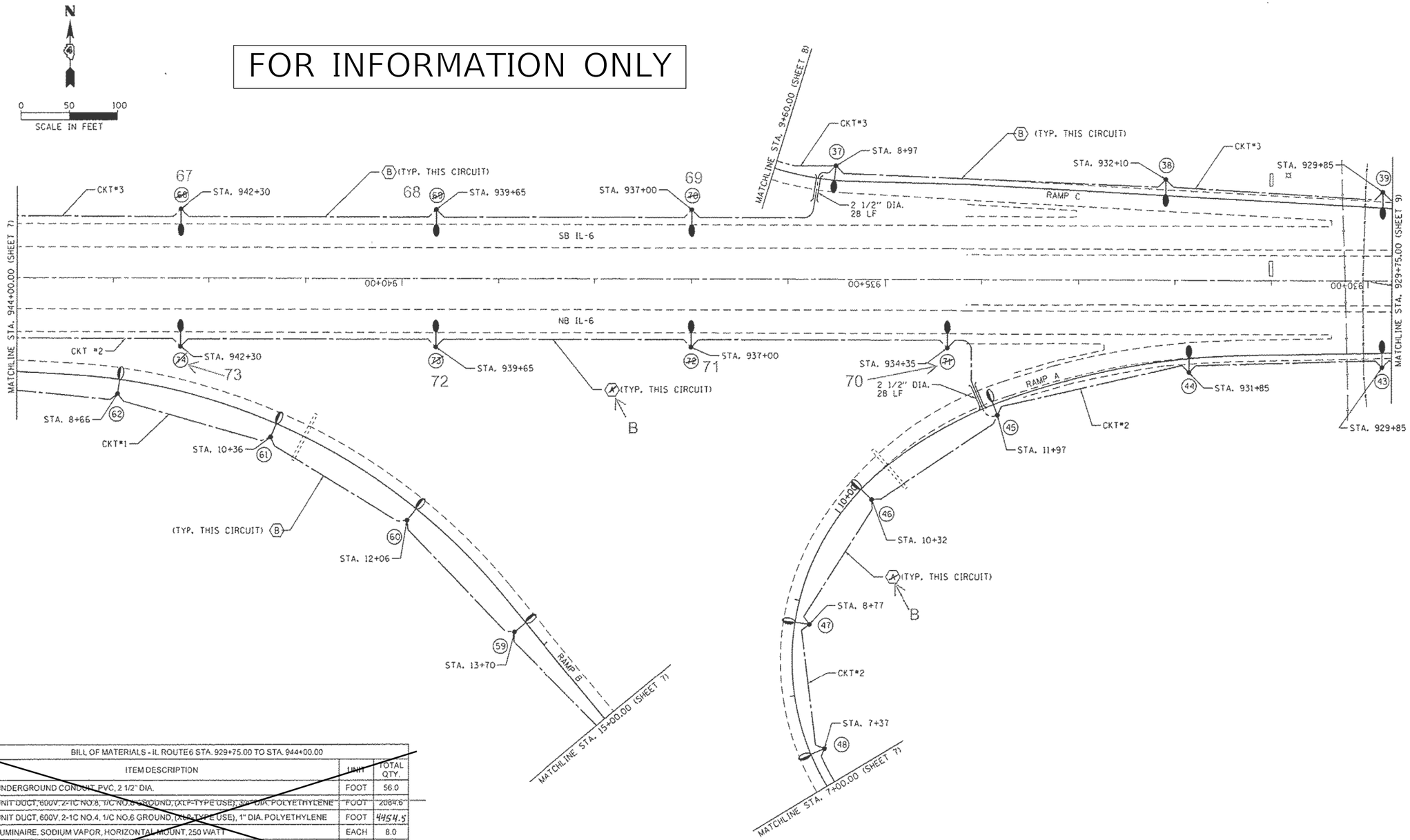

BILL OF MATERIALS - IL ROUTE 6 STA. 929+75.00 TO STA. 944+00.00		
ITEM DESCRIPTION	UNIT	TOTAL QTY.
UNDERGROUND CONDUIT, PVC, 2 1/2" DIA.	FOOT	56.0
UNIT DUCT, 600V, 2-1C NO.8, 1/C NO.8 GROUND, (XLP-TYPE USE), 3/4" DIA. POLYETHYLENE	FOOT	2084.6
UNIT DUCT, 600V, 2-1C NO.4, 1/C NO.6 GROUND, (XLP-TYPE USE), 1" DIA. POLYETHYLENE	FOOT	4454.5
LUMINAIRE, SODIUM VAPOR, HORIZONTAL MOUNT, 250 WATT	EACH	8.0
LUMINAIRE, SODIUM VAPOR, HORIZONTAL MOUNT, 400 WATT	EACH	12.0
LIGHT POLE, GALVANIZED STEEL, 45 FT. M.H., 15 FT. MAST ARM	EACH	8.0
LIGHT POLE, GALVANIZED STEEL, 50 FT. M.H., 15 FT. MAST ARM	EACH	12.0
LIGHT POLE FOUNDATION, 30" DIAMETER	FOOT	140.0
BREAKAWAY DEVICE, TRANSFORMER BASE, 15 INCH BOLT CIRCLE	EACH	20.0

FILE NAME = S:\237\2013\2371309\Default\CADD\Sheets\D468683-sht-lighting 06.dgn	USER NAME = beswanson	DESIGNED -	REVISED -	STATE OF ILLINOIS DEPARTMENT OF TRANSPORTATION	ALLEN ROAD IMPROVEMENTS LIGHTING – ILLINOIS ROUTE 6	F.A.U. RTE.	SECTION	COUNTY	TOTAL SHEETS	SHEET NO.
	PLOT SCALE = 100.0000 ' / in.	DRAWN -	REVISED -			6584	105: (72-7HB)BY	PEORIA	487	274
	PLOT DATE = 1/29/2014 12:12:14 PM	CHECKED -	REVISED -			6585		CONTRACT NO. 68683		
Default		DATE -	REVISED -		SCALE: SHEET 6 OF 19 SHEETS STA. TO STA.			ILLINOIS FED. AID PROJECT		

HIGHWAY LIGHTING SHEET 5 OF 33

	USER NAME = $USERS	DESIGNED -	REVISED -	STATE OF ILLINOIS DEPARTMENT OF TRANSPORTATION	EXISTING LIGHTING PLANS – CONTINUED IL 6 & ALLEN ROAD INTERCHANGE – PEORIA COUNTY	F.A.P. RTE.	SECTION	COUNTY	TOTAL SHEETS	SHEET NO.
		DRAWN -	REVISED -			318	72[(7,7-1,6-1)RS-2; (7-2,3)RS]	PEORIA	180	132
	PLOT SCALE = 1:301.946	CHECKED -	REVISED -					CONTRACT NO. 68C98		
	PLOT DATE = 12/16/2019	DATE -	REVISED -		SCALE: SHEET OF SHEETS STA. TO STA.			ILLINOIS FED. AID PROJECT		

72[(7,7-1,6-1)RS-2(7-2,3)RS]

MODEL: Default
FILE NAME: pw:\\planroom.dot.illinois.gov:PWIDOT\Documents\IDOT Offices\District 4\Projects\D4 68C98\CADD\Data\CADD\Sheets\IL 6 Lighting (FINAL 12-12-19).dgn

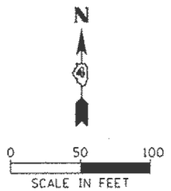

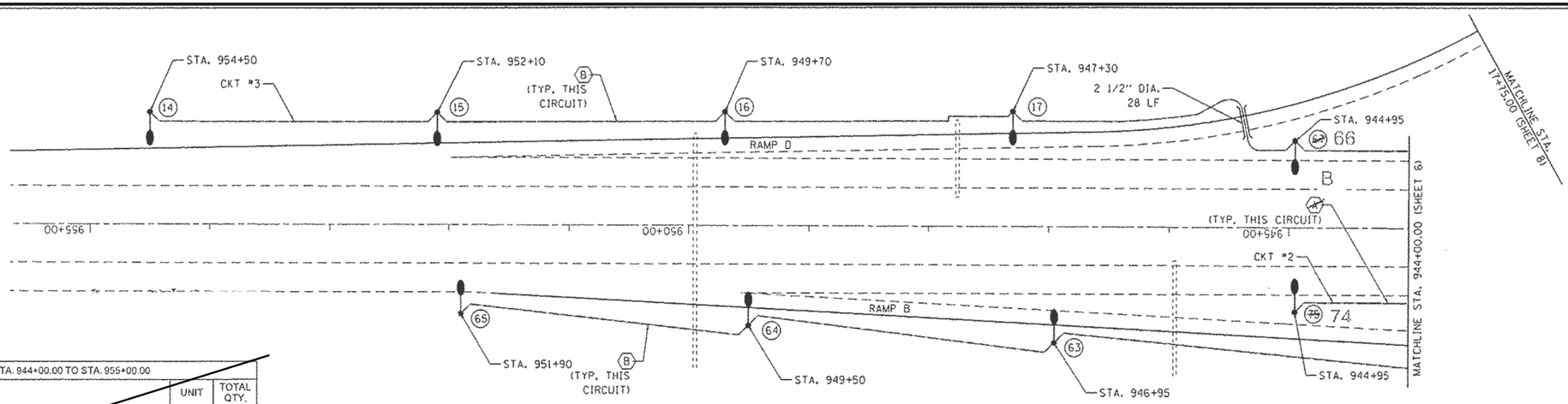

BILL OF MATERIALS - IL ROUTE 6 STA. 944+00.00 TO STA. 955+00.00		
ITEM DESCRIPTION	UNIT	TOTAL QTY.
UNDERGROUND CONDUIT, PVC, 2 1/2" DIA.	FOOT	28.0
~~UNIT DUCT, 600V, 2-1C NO.8, 1/C NO.8 GROUND, (XLP-TYPE USE), 3/4" DIA. POLYETHYLENE~~	~~FOOT~~	~~101.2~~
UNIT DUCT, 600V, 2-1C NO.4, 1/C NO.6 GROUND, (XLP-TYPE USE), 1" DIA. POLYETHYLENE	FOOT	2322.9
LUMINAIRE, SODIUM VAPOR, HORIZONTAL MOUNT, 400 WATT	EACH	9
LIGHT POLE, GALVANIZED STEEL, 50 FT. M.H., 15 FT. MAST ARM	EACH	9
LIGHT POLE FOUNDATION, 30" DIAMETER	FOOT	63
BREAKAWAY DEVICE, TRANSFORMER BASE, 15 INCH BOLT CIRCLE	EACH	9

FOR INFORMATION ONLY

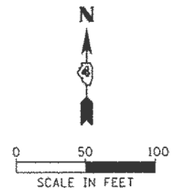

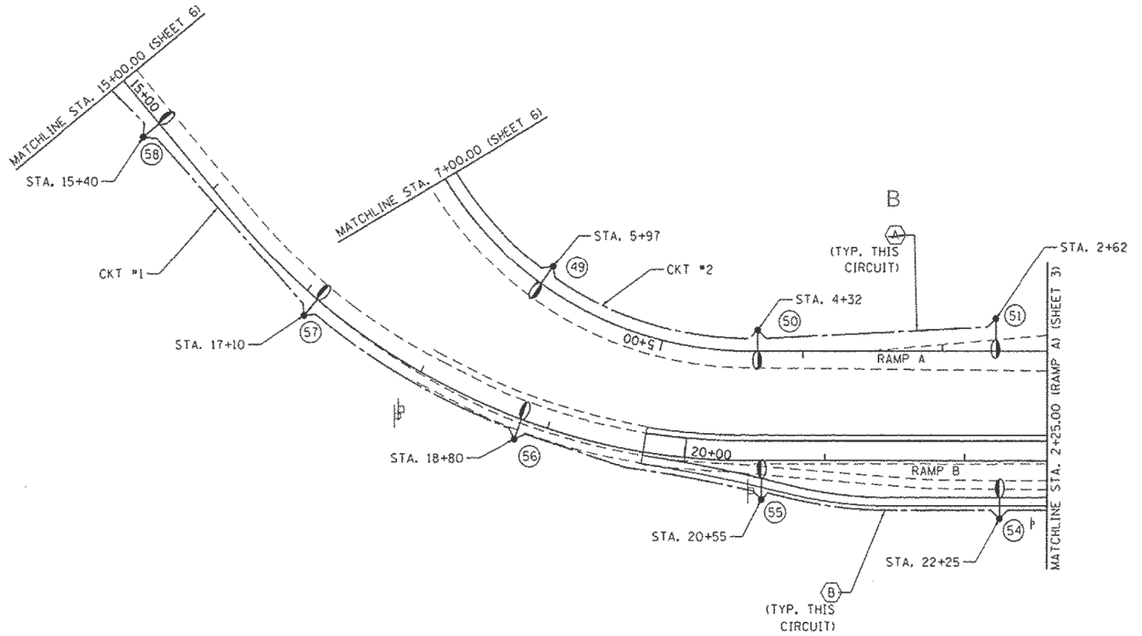

BILL OF MATERIALS - IL 6 NB RAMPS A & B		
ITEM DESCRIPTION	UNIT	TOTAL QTY.
~~UNIT DUCT, 600V, 2-1C NO.8, 1/C NO.8 GROUND, (XLP-TYPE USE), 3/4" DIA. POLYETHYLENE~~	~~FOOT~~	~~450.5~~
UNIT DUCT, 600V, 2-1C NO.4, 1/C NO.6 GROUND, (XLP-TYPE USE), 1" DIA. POLYETHYLENE	FOOT	1281.9
LUMINAIRE, SODIUM VAPOR, HORIZONTAL MOUNT, 250 WATT	EACH	8.0
LIGHT POLE, GALVANIZED STEEL, 45 FT. M.H., 15 FT. MAST ARM	EACH	8.0
LIGHT POLE FOUNDATION, 30" DIAMETER	FOOT	56.0
BREAKAWAY DEVICE, TRANSFORMER BASE, 15 INCH BOLT CIRCLE	EACH	8.0

FILE NAME = S:\237\2013\2371009.00\AllenRdPh1\CADD\CADD Sheets\D468683-sht-lighting 07.dgn	USER NAME = baswanson	DESIGNED -	REVISED -
		DRAWN -	REVISED -
Default	PLOT SCALE = 100.0000 ' / in.	CHECKED -	REVISED -
	PLOT DATE = 1/29/2014 12:12:15 PM	DATE -	REVISED -

STATE OF ILLINOIS
DEPARTMENT OF TRANSPORTATION

ALLEN ROAD IMPROVEMENTS
LIGHTING – ILLINOIS ROUTE 6

SCALE: | SHEET 7 OF 19 SHEETS | STA. | TO STA.

F.A.U. RTE.	SECTION	COUNTY	TOTAL SHEETS	SHEET NO.
6584	105; (72-THIBY	PEORIA	487	275
6585		CONTRACT NO. 68683		
	ILLINOIS FED. AID PROJECT			

	USER NAME = $USER$	DESIGNED -	REVISED -
		DRAWN -	REVISED -
	PLOT SCALE = 1:301.946	CHECKED -	REVISED -
	PLOT DATE = 12/16/2019	DATE -	REVISED -

STATE OF ILLINOIS
DEPARTMENT OF TRANSPORTATION

EXISTING LIGHTING PLANS – CONTINUED
IL 6 & ALLEN ROAD INTERCHANGE – PEORIA COUNTY

SCALE: | SHEET OF SHEETS | STA. | TO STA.

F.A.P. RTE.	SECTION	COUNTY	TOTAL SHEETS	SHEET NO.
318	72[(7,7-1,6-1)RS-2; (7-2,3)RS]	PEORIA	180	133
		CONTRACT NO. 68C98		
	ILLINOIS FED. AID PROJECT			

72[(7,7-1,6-1)RS-2(7-2,3)RS]

MODEL: Default
FILE NAME: pw:\\danroom.dot.illinois.gov:PWIDOTDocuments\IDOT Offices\District 4\Projects\D4 68C98\CADD\Data\CAD\sheets\IL 6 Lighting (FINAL 12-12-19).dgn

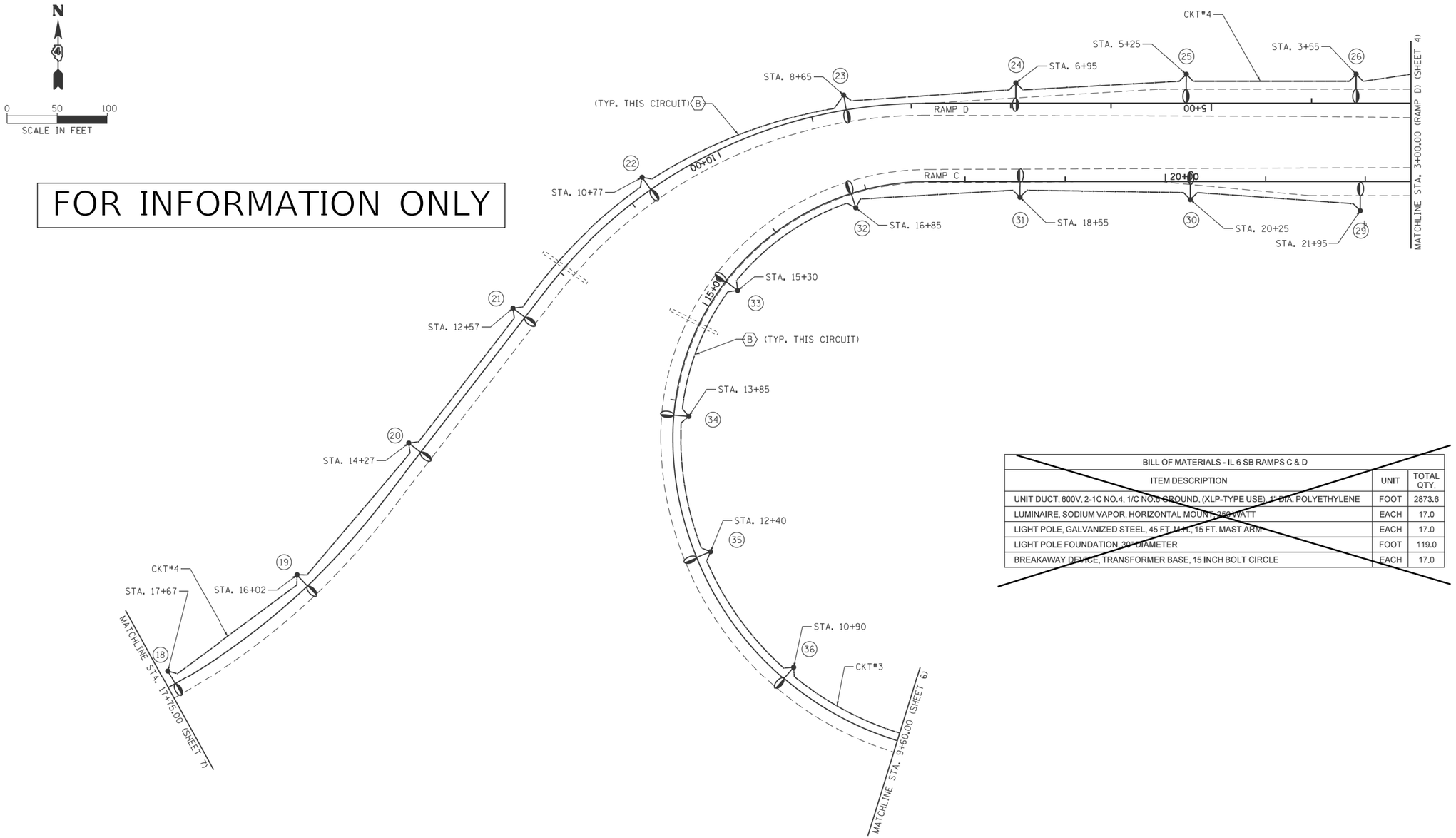

BILL OF MATERIALS - IL 6 SB RAMPS C & D		
ITEM DESCRIPTION	UNIT	TOTAL QTY.
UNIT DUCT, 600V, 2-1C NO.4, 1/C NO.6 GROUND, (XLP-TYPE USE), 1" DIA. POLYETHYLENE	FOOT	2873.6
LUMINAIRE, SODIUM VAPOR, HORIZONTAL MOUNT, 250 WATT	EACH	17.0
LIGHT POLE, GALVANIZED STEEL, 45 FT. M.H., 15 FT. MAST ARM	EACH	17.0
LIGHT POLE FOUNDATION, 30" DIAMETER	FOOT	119.0
BREAKAWAY DEVICE, TRANSFORMER BASE, 15 INCH BOLT CIRCLE	EACH	17.0

FILE NAME = S:\237\2013\23713009.00\AllenRdPhII\CADD\CADD Sheets\D468683-sht-lighting 08.dgn Default	USER NAME = baswanson	DESIGNED -	REVISED -
		DRAWN -	REVISED -
	PLOT SCALE = 100.0000 ' / in.	CHECKED -	REVISED -
	PLOT DATE = 1/29/2014 12:12:15 PM	DATE -	REVISED -

STATE OF ILLINOIS
DEPARTMENT OF TRANSPORTATION

ALLEN ROAD IMPROVEMENTS
LIGHTING – ILLINOIS ROUTE 6

SCALE: | SHEET 8 OF 19 SHEETS | STA. | TO STA.

F.A.U. RTE.	SECTION	COUNTY	TOTAL SHEETS	SHEET NO.
6584	105; (72-7HB)BY	PEORIA	487	276
6585		CONTRACT NO. 68683		
		ILLINOIS	FED. AID PROJECT	

HIGHWAY LIGHTING SHEET 7 OF 33

	USER NAME = $USER$	DESIGNED -	REVISED -
		DRAWN -	REVISED -
	PLOT SCALE = 1:301.946	CHECKED -	REVISED -
	PLOT DATE = 12/16/2019	DATE -	REVISED -

STATE OF ILLINOIS
DEPARTMENT OF TRANSPORTATION

EXISTING LIGHTING PLANS – CONTINUED
IL 6 & ALLEN ROAD INTERCHANGE – PEORIA COUNTY

SCALE: | SHEET OF SHEETS | STA. | TO STA.

F.A.P. RTE.	SECTION	COUNTY	TOTAL SHEETS	SHEET NO.
318	72[(7,7-1,6-1)RS-2; (7-2,3)RS]	PEORIA	180	134
		CONTRACT NO. 68C98		
		ILLINOIS	FED. AID PROJECT	

72[(7,7-1,6-1)RS-2(7-2,3)RS]

MODEL: Default
FILE NAME: pw:\\ulanroom.dot.illinois.gov:PWIDOT\Documents\IDOT Offices\District 4\Projects\D4 68C98\CADData\CADSheets\IL 6 Lighting FINAL 12-12-19.dgn

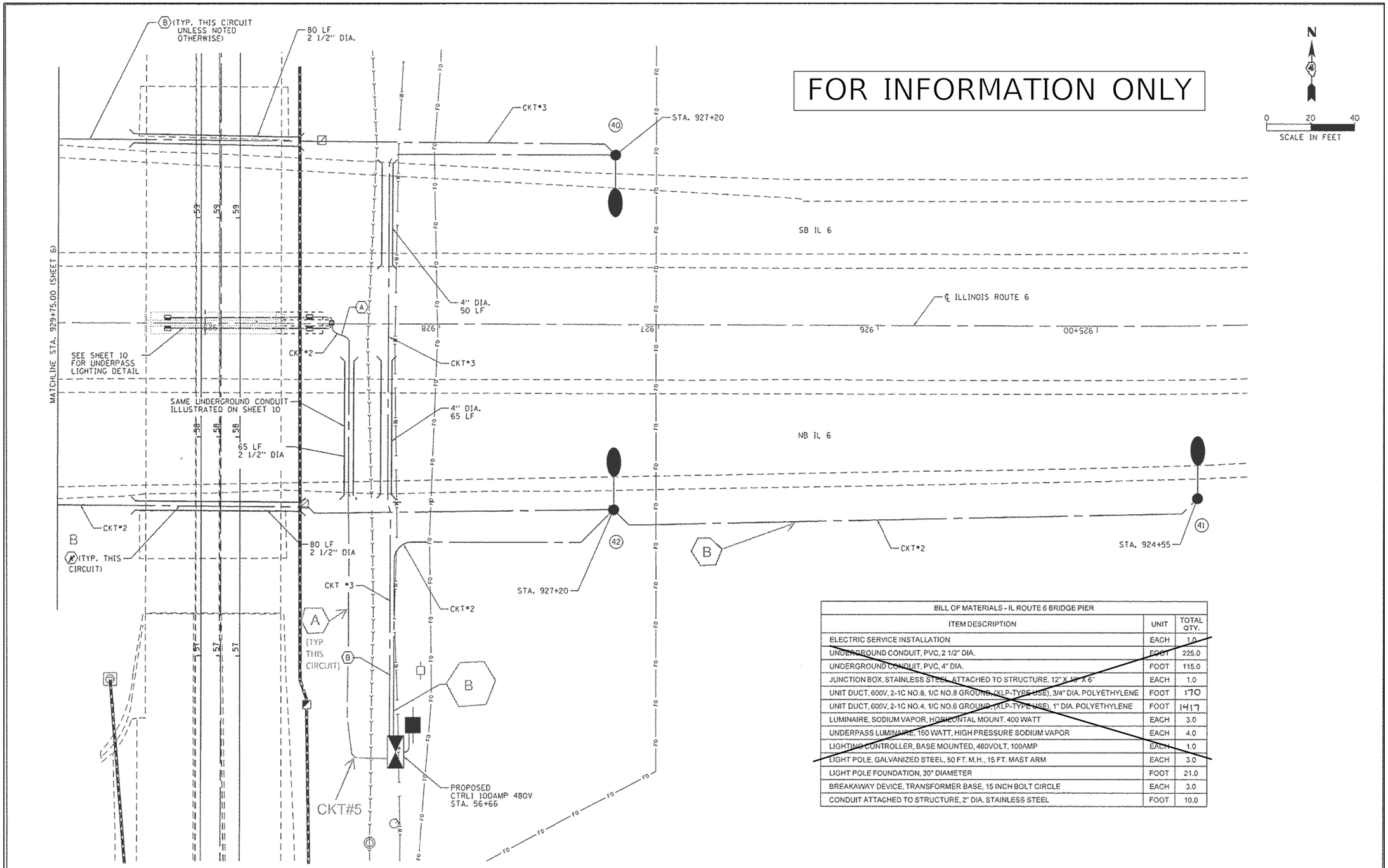

BILL OF MATERIALS - IL ROUTE 6 BRIDGE PIER		
ITEM DESCRIPTION	UNIT	TOTAL QTY.
ELECTRIC SERVICE INSTALLATION	EACH	1.0
UNDERGROUND CONDUIT, PVC, 2 1/2" DIA.	FOOT	225.0
UNDERGROUND CONDUIT, PVC, 4" DIA.	FOOT	115.0
JUNCTION BOX, STAINLESS STEEL, ATTACHED TO STRUCTURE, 12" X 10" X 6"	EACH	1.0
UNIT DUCT, 600V, 2-1C NO.8, 1/C NO.8 GROUND, (XLP-TYPE USE), 3/4" DIA. POLYETHYLENE	FOOT	170
UNIT DUCT, 600V, 2-1C NO.4, 1/C NO.6 GROUND, (XLP-TYPE USE), 1" DIA. POLYETHYLENE	FOOT	1417
LUMINAIRE, SODIUM VAPOR, HORIZONTAL MOUNT, 400 WATT	EACH	3.0
UNDERPASS LUMINAIRE, 150 WATT, HIGH PRESSURE SODIUM VAPOR	EACH	4.0
LIGHTING CONTROLLER, BASE MOUNTED, 480VOLT, 100AMP	EACH	1.0
LIGHT POLE, GALVANIZED STEEL, 50 FT. M.H., 15 FT. MAST ARM	EACH	3.0
LIGHT POLE FOUNDATION, 30" DIAMETER	FOOT	21.0
BREAKAWAY DEVICE, TRANSFORMER BASE, 15 INCH BOLT CIRCLE	EACH	3.0
CONDUIT ATTACHED TO STRUCTURE, 2" DIA. STAINLESS STEEL	FOOT	10.0

FILE NAME = S:\237\2013\23713009.00\AllenRdPhII\CADD	USER NAME = beswanson	DESIGNED -	REVISED -
	CADD Sheets\D468683-sht-lighting 09.dgn	DRAWN -	REVISED -
	PLOT SCALE = 40.0000 ' / in.	CHECKED -	REVISED -
Default	PLOT DATE = 1/29/2014 12:12:16 PM	DATE -	REVISED -

STATE OF ILLINOIS
DEPARTMENT OF TRANSPORTATION

ALLEN ROAD IMPROVEMENTS
LIGHTING - ILLINOIS ROUTE 6

SCALE: SHEET 9 OF 19 SHEETS STA. TO STA.

F.A.U. RTE.	SECTION	COUNTY	TOTAL SHEETS	SHEET NO.
6584	105: (72-7HB)BY	PEORIA	487	277
6585		CONTRACT NO. 68683		
		ILLINOIS FED. AID PROJECT		

HIGHWAY LIGHTING SHEET 8 OF 33

USER NAME = $USER$	DESIGNED -	REVISED -	
	DRAWN -	REVISED -	
PLOT SCALE = 1:301.946	CHECKED -	REVISED -	
PLOT DATE = 12/16/2019	DATE -	REVISED -	

STATE OF ILLINOIS
DEPARTMENT OF TRANSPORTATION

EXISTING LIGHTING PLANS - CONTINUED
IL 6 & ALLEN ROAD INTERCHANGE - PEORIA COUNTY

SCALE: SHEET OF SHEETS STA. TO STA.

F.A.P. RTE.	SECTION	COUNTY	TOTAL SHEETS	SHEET NO.
318	72[(7,7-1,6-1)RS-2; (7-2,3)RS]	PEORIA	180	135
		CONTRACT NO. 68C98		
		ILLINOIS FED. AID PROJECT		

72[(7,7-1,6-1)RS-2(7-2,3)RS]

MODEL: Default
FILE NAME: pw:\\planroom.dot.illinois.gov:PWIDOT\Documents\IDOT Offices\District 4\Projects\D4_68C98\CADData\CADsheets\IL 6 Lighting (FINAL 12-12-19).dgn

FOR INFORMATION ONLY

NOTES:

1. PROPOSED UNDERPASS LUMINAIRES SHALL BE CENTER PIER MOUNTED, OFFSET 30 FEET FROM EDGE OF PAVEMENT OF ROADWAY. SEE SHEET 11 FOR WALL UNDERPASS LIGHTING WITH CENTER PIER DETAILS.

2. CONDUIT AND WIRING FROM JUNCTION BOX AT BRIDGE PIER TO THE UNDERPASS LUMINAIRE(S) SHALL BE INCIDENTAL TO THE COST OF THE UNDERPASS LUMINAIRE(S). THIS INCLUDES ALL APPURTENANCES INCLUDING BUT NOT LIMITED TO: STRAPS, CLAMPS, HANGERS, FITTING, ATTACHMENTS, HARDWARE, JUNCTION BOXES, ETC.

3. CONDUIT ATTACHED TO STRUCTURE SHALL BE RIGID GALVANIZED STEEL UNLESS NOTED OTHERWISE. ALL HARDWARE AND CONDUIT APPURTENANCES, AS NOTED ABOVE, SHALL BE STAINLESS STEEL. ANY CONDUIT THAT PENETRATES THE GROUND SHALL BE STAINLESS STEEL.

4. SEE LIGHTING SHEET 9 FOR BILL OF MATERIALS FOR THIS SHEET.

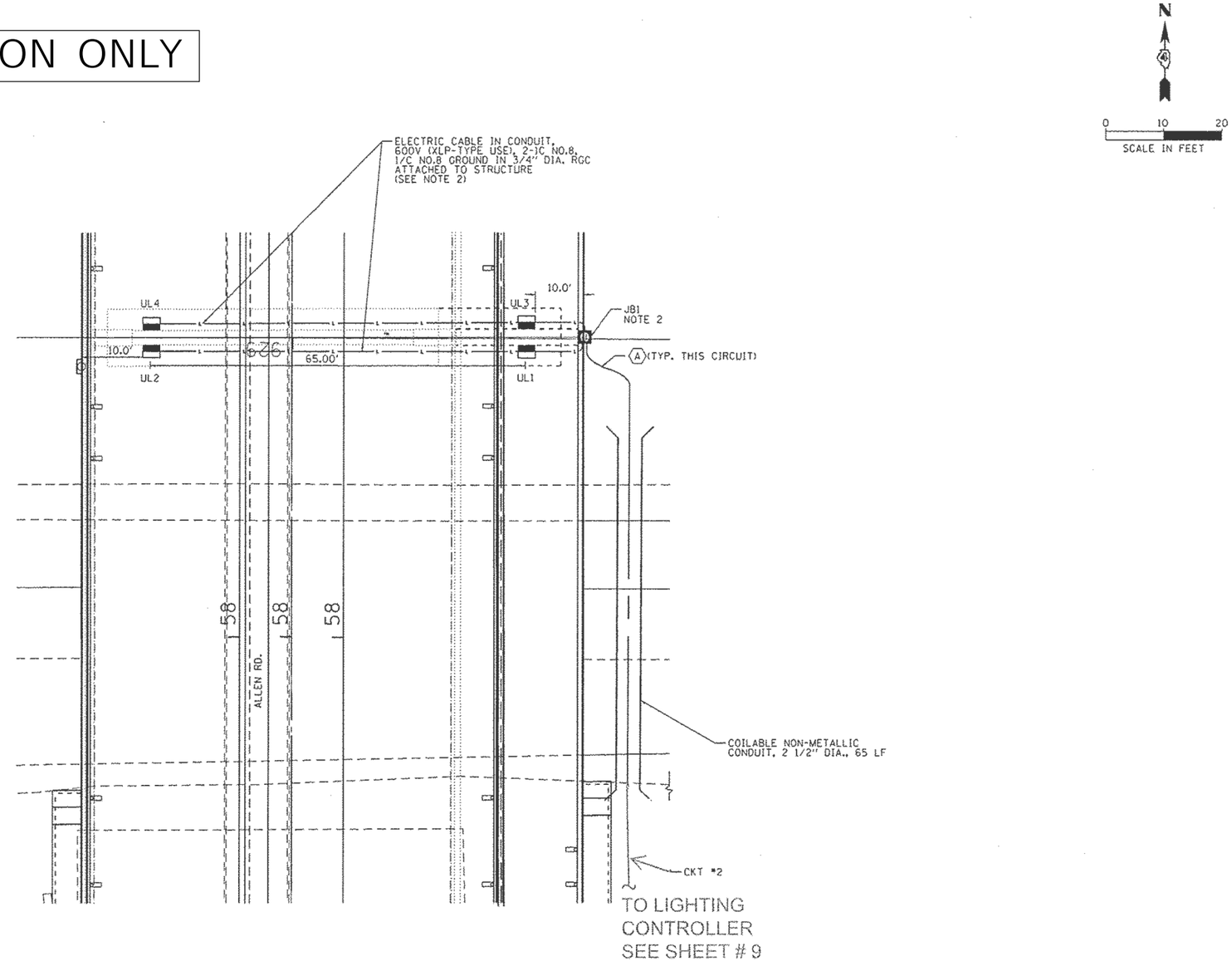

FILE NAME = S:\237\2013\23713009.00\AllenRdPhII\CADD Default	USER NAME = baswenson	DESIGNED -	REVISED -	STATE OF ILLINOIS DEPARTMENT OF TRANSPORTATION	ALLEN ROAD IMPROVEMENTS LIGHTING - ILLINOIS ROUTE 6	F.A.U. RTE.	SECTION	COUNTY	TOTAL SHEETS / SHEET NO.
	CADD Sheets\D468683-sht-lighting 10.dgn	DRAWN -	REVISED -			6584	105: (72-7HB)BY	PEORIA	487 / 278
	PLOT SCALE = 40.0000 ' / in.	CHECKED -	REVISED -			6585		CONTRACT NO. 68683	
	PLOT DATE = 1/29/2014 12:12:17 PM	DATE -	REVISED -		SCALE: SHEET 10 OF 19 SHEETS STA. TO STA.		ILLINOIS FED. AID PROJECT		

HIGHWAY LIGHTING SHEET 9 OF 33

	USER NAME = $USER$	DESIGNED -	REVISED -	STATE OF ILLINOIS DEPARTMENT OF TRANSPORTATION	EXISTING LIGHTING PLANS - CONTINUED IL 6 & ALLEN ROAD INTERCHANGE - PEORIA COUNTY	F.A.P. RTE.	SECTION	COUNTY	TOTAL SHEETS / SHEET NO.
		DRAWN -	REVISED -			318	72[(7,7-1,6-1)RS-2; (7-2,3)RS]	PEORIA	180 / 136
	PLOT SCALE = 1:301.946	CHECKED -	REVISED -					CONTRACT NO. 68C98	
	PLOT DATE = 12/16/2019	DATE -	REVISED -		SCALE: SHEET OF SHEETS STA. TO STA.		ILLINOIS FED. AID PROJECT		

72[(7,7-1,6-1)RS-2(7-2,3)RS]

MODEL: Default
FILE NAME: pw:\\planroom.dot.illinois.gov:PWIDOT\Documents\IDOT Offices\District 4\Projects\D4_68C98\CADData\CADsheets\IL 6 Lighting (FINAL 12-12-19).dgn

DESCRIPTION	UNIT	QTY.
LUMINAIRE, LED, ROADWAY, OUTPUT DESIGNATION G	EACH	33.0
LUMINAIRE, LED, ROADWAY, OUTPUT DESIGNATION H	EACH	28.0
LUMINAIRE, LED, UNDERPASS, WALLMOUNT, OUTPUT DESIGNATION E	EACH	4.0
TRAFFIC SIGNAL BACKPLATE, RETROREFLECTIVE	EACH	7.0
CLOSED CIRCUIT TELEVISION DOME CAMERA, HD	EACH	1.0
FULL-ACTUATED CONTROLLER AND TYPE IV CABINET, SPECIAL	EACH	2.0
TRAFFIC SIGNAL BATTERY BACKUP SYSTEM	EACH	2.0
VIDEO VEHICLE DETECTION SYSTEM	EACH	2.0
ROMOVE LUMINAIRE, COMPLETE	EACH	65.0

TRAFFIC SIGNAL BACKPLATE, RETROREFLECTIVE SCHEDULE

INTERSECTION	UNIT	TOTAL QTY.	LOCATION
IL 6 SB & ALLEN RD.	EACH	0.0	SIGNAL HEAD 5, 9, 10, 11
IL 6 NB & ALLEN RD.	EACH	3.0	SIGNAL HEAD 5, 9, 10

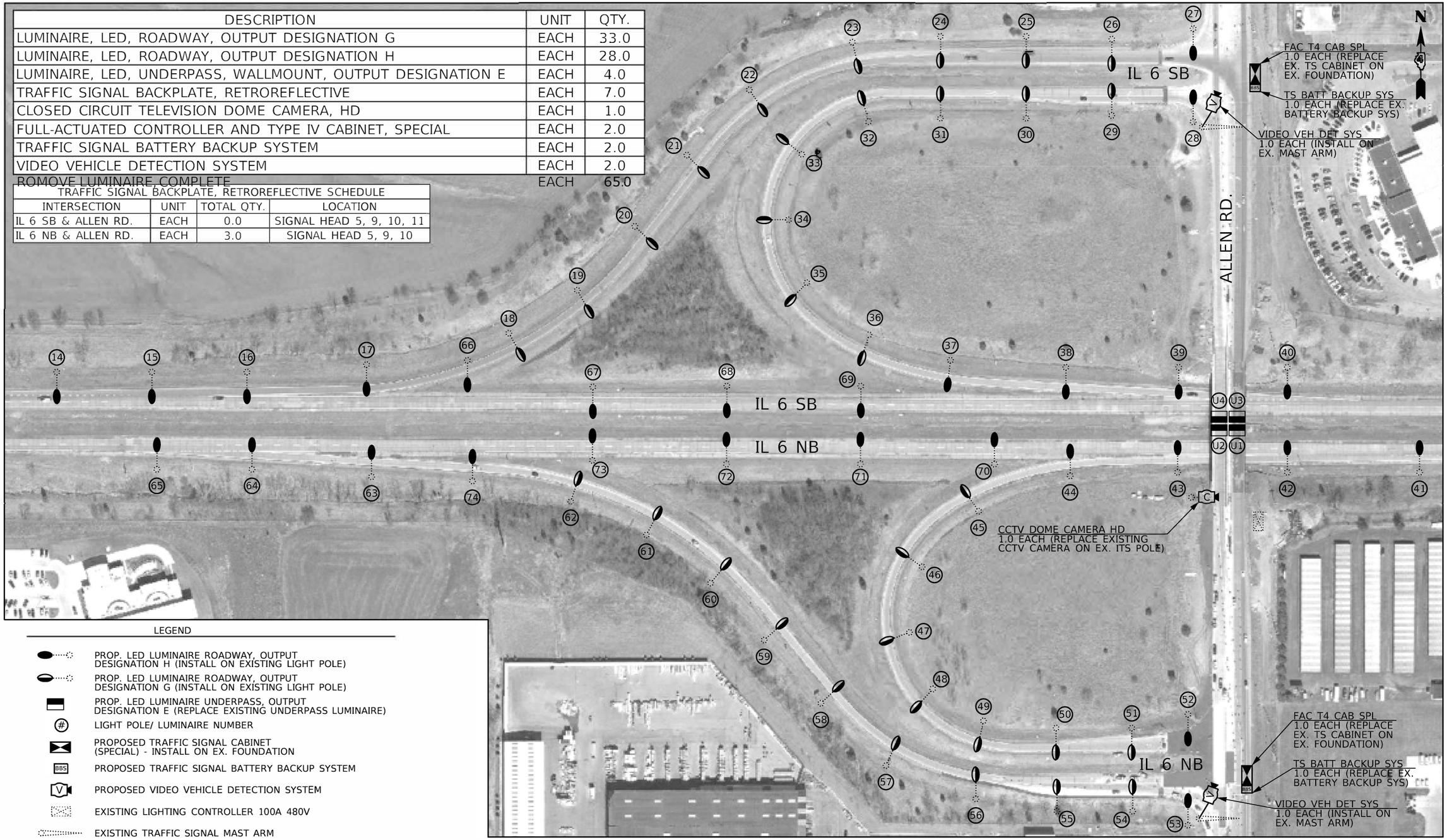

LEGEND

- PROP. LED LUMINAIRE ROADWAY, OUTPUT DESIGNATION H (INSTALL ON EXISTING LIGHT POLE)
- PROP. LED LUMINAIRE ROADWAY, OUTPUT DESIGNATION G (INSTALL ON EXISTING LIGHT POLE)
- PROP. LED LUMINAIRE UNDERPASS, OUTPUT DESIGNATION E (REPLACE EXISTING UNDERPASS LUMINAIRE)
- LIGHT POLE/ LUMINAIRE NUMBER
- PROPOSED TRAFFIC SIGNAL CABINET (SPECIAL) - INSTALL ON EX. FOUNDATION
- PROPOSED TRAFFIC SIGNAL BATTERY BACKUP SYSTEM
- PROPOSED VIDEO VEHICLE DETECTION SYSTEM
- EXISTING LIGHTING CONTROLLER 100A 480V
- EXISTING TRAFFIC SIGNAL MAST ARM

NOTES:
1. THE CONTRACTOR SHALL FIELD VERIFY LIGHTING SYSTEM VOLTAGE, LUMINAIRE TYPE, AND FIELD CONDITIONS PRIOR TO CONSTRUCTION.
2. THE EXISTING LIGHTING SYSTEM INCLUDES LIGHT POLES AND LUMINAIRES ALONG ALLEN RD. WHICH ARE NOT INCLUDED IN THIS PROJECT. THIS PROJECT ONLY INCLUDES LIGHT POLES SHOWN ON THIS PLAN SHEET.
3. THE CONTRACTOR SHALL REMOVE AND REPLACE THE EXISTING LIGHT POLE LABELING WITH NEW LABELS CONSISTING OF DIAMOND GRADE REFLECTIVE SHEETING, FOR ALL LIGHT POLES ON THIS SHEET. THE NEW LABELS SHALL MATCH THE EXISTING POLE LABLES. THE COST OF THIS WORK SHALL BE INCLUDED IN THE BID PRICE OF THE PROPOSED LUMINAIRES.
4. THE EXISTING FUSE HOLDERS, FUSES, SURGE ARRESTORS, AND LUMINAIRE WIRING WILL BE RE-USED AT THIS LOCATION.

THE EXISTING TRAFFIC SIGNALS SHALL REMAIN IN OPERATION UNTIL THE PROPOSED TRAFFIC SIGNALS ARE INSTALLED. THE EXISTING TRAFFIC SIGNAL CONTROLLER, CABINET, BATTERY BACKUP SYSTEM, AND ASSOCIATED ITEMS SHALL BE DELIVERED TO THE CITY OF PEORIA PUBLIC WORKS AT 3505 N. DRIES LN. PEORIA. THIS WORK SHALL BE INCLUDED IN THE PROPOSED TRAFFIC SIGNAL CONTROLLER CABINETS AND BATTERY BACKUP SYSTEMS.

HIGHWAY LIGHTING
SHEET 10 OF 33

NOT TO SCALE

MODEL: Default
FILE NAME: pw:\\planroom.dot.illinois.gov:PWIDOT\Documents\IDOT Offices\District 4\Projects\04 68C98\CADData\CADsheets\IL 6 Lighting (FINAL 12-12-19).dgn

USER NAME = $USER$	DESIGNED -	REVISED -	
	DRAWN -	REVISED -	
PLOT SCALE = 1:301.946	CHECKED -	REVISED -	
PLOT DATE = 12/16/2019	DATE -	REVISED -	

STATE OF ILLINOIS
DEPARTMENT OF TRANSPORTATION

PROPOSED LIGHTING PLANS
IL 6 & ALLEN ROAD INTERCHANGE – PEORIA COUNTY

SCALE: | SHEET OF SHEETS | STA. | TO STA.

F.A.P. RTE.	SECTION	COUNTY	TOTAL SHEETS	SHEET NO.
318	72[(7,7-1,6-1)RS-2; (7-2,3)RS]	PEORIA	180	137
		CONTRACT NO. 68C98		
	ILLINOIS	FED. AID PROJECT		

72[(7,7-1,6-1)RS-2(7-2,3)RS]

REV. 2/11/20

LEGEND

- PROP. LED LUMINAIRE ROADWAY, OUTPUT DESIGNATION H (INSTALL ON EXISTING LIGHT POLE)
- PROP. LED LUMINAIRE ROADWAY, OUTPUT DESIGNATION G (INSTALL ON EXISTING LIGHT POLE)
- PROP. LED LUMINAIRE UNDERPASS, OUTPUT DESIGNATION E (REPLACE EXISTING UNDERPASS LUMINAIRE)
- EXISTING JUNCTION BOX

27
28
52
53

LUMINAIRES ON LIGHT POLES 27, 28, 52, 53 ARE ON EXISTING TRAFFIC SIGNAL CIRCUITS AT IL 6 RAMPS & ALLEN RD. (NOT SHOWN BELOW) AND SHALL BE REPLACED AS SHOWN ON THE PLANS.

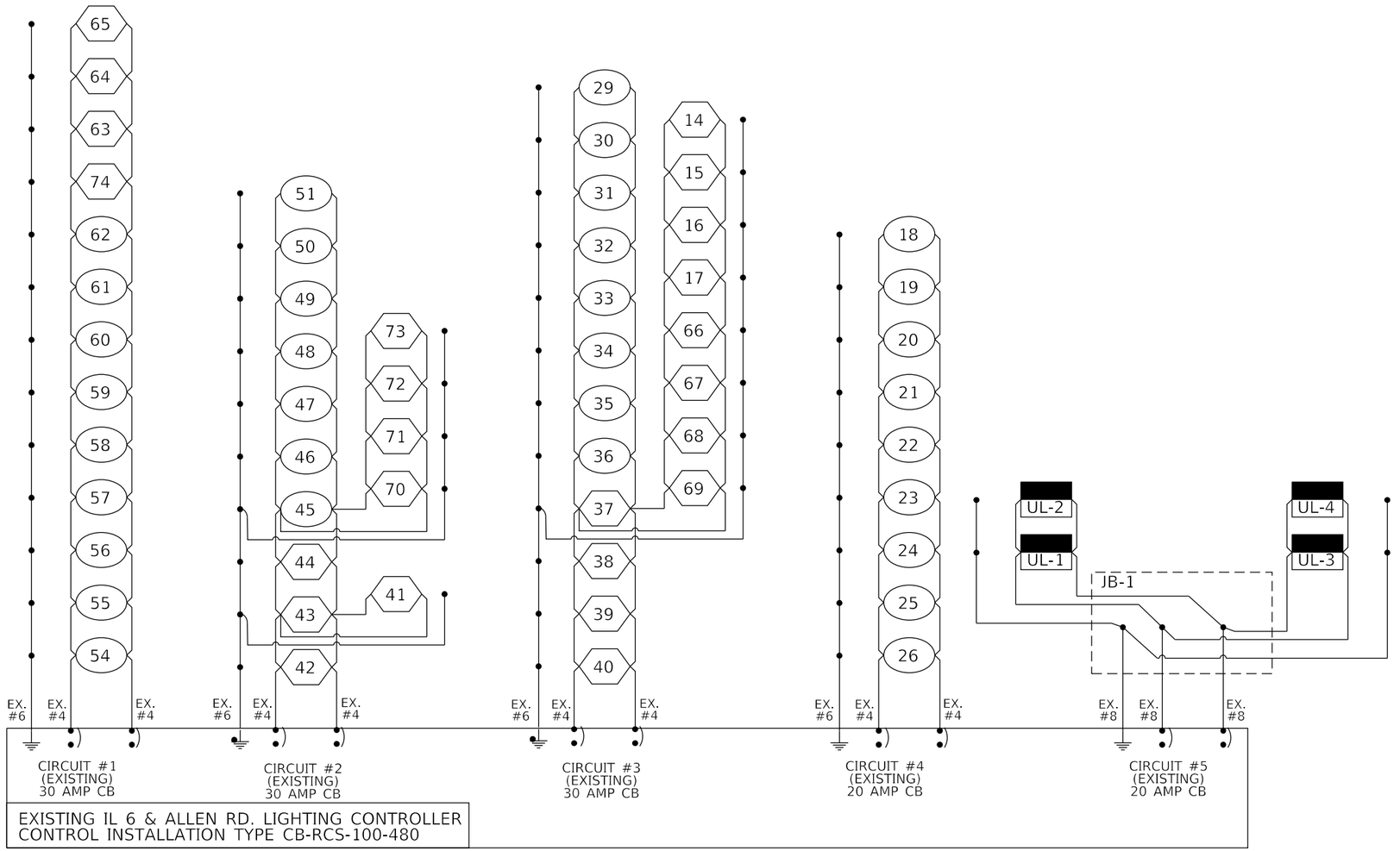

EXISTING IL 6 & ALLEN RD. LIGHTING CONTROLLER CONTROL INSTALLATION TYPE CB-RCS-100-480

NOTES:
1. ELECTRICAL CIRCUIT DIAGRAMS FOR TRAFFIC SIGNALS AT IL 6 RAMPS & ALLEN RD. ARE NOT SHOWN IN THESE PLANS. LUMINAIRES ON LIGHT POLES 27, 28, 52, 53 ARE ON TRAFFIC SIGNAL CIRCUITS AT IL 6 RAMPS & ALLEN RD. AND SHALL BE REPLACED AS SHOWN ON THE PLANS.
2. THE CONTRACTOR SHALL FIELD VERIFY LIGHTING SYSTEM VOLTAGE, LUMINAIRE TYPE, AND FIELD CONDITIONS PRIOR TO CONSTRUCTION.

HIGHWAY LIGHTING
SHEET 11 OF 33

NOT TO SCALE

MODEL: Default
FILE NAME: pw:\\planroom.dot.illinois.gov:PWIDOT1Documents\IDOT Offices\District 4\Projects\D4_68C98\CAD\stat\CAD\sheets\IL 6 Lighting (FINAL 12-12-19).dgn

USER NAME = $USER$	DESIGNED -	REVISED -	**STATE OF ILLINOIS**
	DRAWN -	REVISED -	**DEPARTMENT OF TRANSPORTATION**
PLOT SCALE = 1:301.946	CHECKED -	REVISED -	
PLOT DATE = 12/16/2019	DATE -	REVISED -	

PROPOSED CIRCUIT DIAGRAM
IL 6 & ALLEN ROAD INTERCHANGE – PEORIA COUNTY

SCALE: | SHEET OF SHEETS | STA. | TO STA.

F.A.P. RTE.	SECTION	COUNTY	TOTAL SHEETS	SHEET NO.
318	72[(7,7-1,6-1)RS-2; (7-2,3)RS]	PEORIA	180	138
		CONTRACT NO. 68C98		
		ILLINOIS	FED. AID PROJECT	

72[(7,7-1,6-1)RS-2(7-2,3)RS]

IL 6 & ALLEN RD. INTERCHANGE LIGHT POLE SCHEDULE

POLE NO.	EX. POLE TYPE	MOUNTING HEIGHT (FT.)	ARM LENGTH (FT.)	EX. LUMINAIRE	EX. LUMINAIRE QTY.	PROP. LUMINAIRE	PROP. LUMINAIRE QTY.
14	GALVANIZED STEEL, MAST ARM	50.0	15.0	HPS, 400W, HORIZONTAL MOUNT	1.0	LUMINAIRE, LED, ROADWAY, OUTPUT DESIGNATION H	1.0
15	GALVANIZED STEEL, MAST ARM	50.0	15.0	HPS, 400W, HORIZONTAL MOUNT	1.0	LUMINAIRE, LED, ROADWAY, OUTPUT DESIGNATION H	1.0
16	GALVANIZED STEEL, MAST ARM	50.0	15.0	HPS, 400W, HORIZONTAL MOUNT	1.0	LUMINAIRE, LED, ROADWAY, OUTPUT DESIGNATION H	1.0
17	GALVANIZED STEEL, MAST ARM	50.0	15.0	HPS, 400W, HORIZONTAL MOUNT	1.0	LUMINAIRE, LED, ROADWAY, OUTPUT DESIGNATION H	1.0
18	GALVANIZED STEEL, MAST ARM	45.0	15.0	HPS, 250W, HORIZONTAL MOUNT	1.0	LUMINAIRE, LED, ROADWAY, OUTPUT DESIGNATION G	1.0
19	GALVANIZED STEEL, MAST ARM	45.0	15.0	HPS, 250W, HORIZONTAL MOUNT	1.0	LUMINAIRE, LED, ROADWAY, OUTPUT DESIGNATION G	1.0
20	GALVANIZED STEEL, MAST ARM	45.0	15.0	HPS, 250W, HORIZONTAL MOUNT	1.0	LUMINAIRE, LED, ROADWAY, OUTPUT DESIGNATION G	1.0
21	GALVANIZED STEEL, MAST ARM	45.0	15.0	HPS, 250W, HORIZONTAL MOUNT	1.0	LUMINAIRE, LED, ROADWAY, OUTPUT DESIGNATION G	1.0
22	GALVANIZED STEEL, MAST ARM	45.0	15.0	HPS, 250W, HORIZONTAL MOUNT	1.0	LUMINAIRE, LED, ROADWAY, OUTPUT DESIGNATION G	1.0
23	GALVANIZED STEEL, MAST ARM	45.0	15.0	HPS, 250W, HORIZONTAL MOUNT	1.0	LUMINAIRE, LED, ROADWAY, OUTPUT DESIGNATION G	1.0
24	GALVANIZED STEEL, MAST ARM	45.0	15.0	HPS, 250W, HORIZONTAL MOUNT	1.0	LUMINAIRE, LED, ROADWAY, OUTPUT DESIGNATION G	1.0
25	GALVANIZED STEEL, MAST ARM	45.0	15.0	HPS, 250W, HORIZONTAL MOUNT	1.0	LUMINAIRE, LED, ROADWAY, OUTPUT DESIGNATION G	1.0
26	GALVANIZED STEEL, MAST ARM	45.0	15.0	HPS, 250W, HORIZONTAL MOUNT	1.0	LUMINAIRE, LED, ROADWAY, OUTPUT DESIGNATION G	1.0
27	GALVANIZED STEEL, MAST ARM	50.0	15.0	HPS, 400W, HORIZONTAL MOUNT	1.0	LUMINAIRE, LED, ROADWAY, OUTPUT DESIGNATION H	1.0
28	GALVANIZED STEEL, MAST ARM	50.0	15.0	HPS, 400W, HORIZONTAL MOUNT	1.0	LUMINAIRE, LED, ROADWAY, OUTPUT DESIGNATION H	1.0
29	GALVANIZED STEEL, MAST ARM	45.0	15.0	HPS, 250W, HORIZONTAL MOUNT	1.0	LUMINAIRE, LED, ROADWAY, OUTPUT DESIGNATION G	1.0
30	GALVANIZED STEEL, MAST ARM	45.0	15.0	HPS, 250W, HORIZONTAL MOUNT	1.0	LUMINAIRE, LED, ROADWAY, OUTPUT DESIGNATION G	1.0
31	GALVANIZED STEEL, MAST ARM	45.0	15.0	HPS, 250W, HORIZONTAL MOUNT	1.0	LUMINAIRE, LED, ROADWAY, OUTPUT DESIGNATION G	1.0
32	GALVANIZED STEEL, MAST ARM	45.0	15.0	HPS, 250W, HORIZONTAL MOUNT	1.0	LUMINAIRE, LED, ROADWAY, OUTPUT DESIGNATION G	1.0
33	GALVANIZED STEEL, MAST ARM	45.0	15.0	HPS, 250W, HORIZONTAL MOUNT	1.0	LUMINAIRE, LED, ROADWAY, OUTPUT DESIGNATION G	1.0
34	GALVANIZED STEEL, MAST ARM	45.0	15.0	HPS, 250W, HORIZONTAL MOUNT	1.0	LUMINAIRE, LED, ROADWAY, OUTPUT DESIGNATION G	1.0
35	GALVANIZED STEEL, MAST ARM	45.0	15.0	HPS, 250W, HORIZONTAL MOUNT	1.0	LUMINAIRE, LED, ROADWAY, OUTPUT DESIGNATION G	1.0
36	GALVANIZED STEEL, MAST ARM	45.0	15.0	HPS, 250W, HORIZONTAL MOUNT	1.0	LUMINAIRE, LED, ROADWAY, OUTPUT DESIGNATION G	1.0
37	GALVANIZED STEEL, MAST ARM	50.0	15.0	HPS, 400W, HORIZONTAL MOUNT	1.0	LUMINAIRE, LED, ROADWAY, OUTPUT DESIGNATION H	1.0
38	GALVANIZED STEEL, MAST ARM	50.0	15.0	HPS, 400W, HORIZONTAL MOUNT	1.0	LUMINAIRE, LED, ROADWAY, OUTPUT DESIGNATION H	1.0
39	GALVANIZED STEEL, MAST ARM	50.0	15.0	HPS, 400W, HORIZONTAL MOUNT	1.0	LUMINAIRE, LED, ROADWAY, OUTPUT DESIGNATION H	1.0
40	GALVANIZED STEEL, MAST ARM	50.0	15.0	HPS, 400W, HORIZONTAL MOUNT	1.0	LUMINAIRE, LED, ROADWAY, OUTPUT DESIGNATION H	1.0
41	GALVANIZED STEEL, MAST ARM	50.0	15.0	HPS, 400W, HORIZONTAL MOUNT	1.0	LUMINAIRE, LED, ROADWAY, OUTPUT DESIGNATION H	1.0
42	GALVANIZED STEEL, MAST ARM	50.0	15.0	HPS, 400W, HORIZONTAL MOUNT	1.0	LUMINAIRE, LED, ROADWAY, OUTPUT DESIGNATION H	1.0
43	GALVANIZED STEEL, MAST ARM	50.0	15.0	HPS, 400W, HORIZONTAL MOUNT	1.0	LUMINAIRE, LED, ROADWAY, OUTPUT DESIGNATION H	1.0
44	GALVANIZED STEEL, MAST ARM	50.0	15.0	HPS, 400W, HORIZONTAL MOUNT	1.0	LUMINAIRE, LED, ROADWAY, OUTPUT DESIGNATION H	1.0
45	GALVANIZED STEEL, MAST ARM	45.0	15.0	HPS, 250W, HORIZONTAL MOUNT	1.0	LUMINAIRE, LED, ROADWAY, OUTPUT DESIGNATION G	1.0
46	GALVANIZED STEEL, MAST ARM	45.0	15.0	HPS, 250W, HORIZONTAL MOUNT	1.0	LUMINAIRE, LED, ROADWAY, OUTPUT DESIGNATION G	1.0
47	GALVANIZED STEEL, MAST ARM	45.0	15.0	HPS, 250W, HORIZONTAL MOUNT	1.0	LUMINAIRE, LED, ROADWAY, OUTPUT DESIGNATION G	1.0
48	GALVANIZED STEEL, MAST ARM	45.0	15.0	HPS, 250W, HORIZONTAL MOUNT	1.0	LUMINAIRE, LED, ROADWAY, OUTPUT DESIGNATION G	1.0
49	GALVANIZED STEEL, MAST ARM	45.0	15.0	HPS, 250W, HORIZONTAL MOUNT	1.0	LUMINAIRE, LED, ROADWAY, OUTPUT DESIGNATION G	1.0
50	GALVANIZED STEEL, MAST ARM	45.0	15.0	HPS, 250W, HORIZONTAL MOUNT	1.0	LUMINAIRE, LED, ROADWAY, OUTPUT DESIGNATION G	1.0
51	GALVANIZED STEEL, MAST ARM	45.0	15.0	HPS, 250W, HORIZONTAL MOUNT	1.0	LUMINAIRE, LED, ROADWAY, OUTPUT DESIGNATION G	1.0
52	GALVANIZED STEEL, MAST ARM	50.0	15.0	HPS, 400W, HORIZONTAL MOUNT	1.0	LUMINAIRE, LED, ROADWAY, OUTPUT DESIGNATION H	1.0
53	GALVANIZED STEEL, MAST ARM	50.0	15.0	HPS, 400W, HORIZONTAL MOUNT	1.0	LUMINAIRE, LED, ROADWAY, OUTPUT DESIGNATION H	1.0
54	GALVANIZED STEEL, MAST ARM	45.0	15.0	HPS, 250W, HORIZONTAL MOUNT	1.0	LUMINAIRE, LED, ROADWAY, OUTPUT DESIGNATION G	1.0
55	GALVANIZED STEEL, MAST ARM	45.0	15.0	HPS, 250W, HORIZONTAL MOUNT	1.0	LUMINAIRE, LED, ROADWAY, OUTPUT DESIGNATION G	1.0
56	GALVANIZED STEEL, MAST ARM	45.0	15.0	HPS, 250W, HORIZONTAL MOUNT	1.0	LUMINAIRE, LED, ROADWAY, OUTPUT DESIGNATION G	1.0
57	GALVANIZED STEEL, MAST ARM	45.0	15.0	HPS, 250W, HORIZONTAL MOUNT	1.0	LUMINAIRE, LED, ROADWAY, OUTPUT DESIGNATION G	1.0
58	GALVANIZED STEEL, MAST ARM	45.0	15.0	HPS, 250W, HORIZONTAL MOUNT	1.0	LUMINAIRE, LED, ROADWAY, OUTPUT DESIGNATION G	1.0
59	GALVANIZED STEEL, MAST ARM	45.0	15.0	HPS, 250W, HORIZONTAL MOUNT	1.0	LUMINAIRE, LED, ROADWAY, OUTPUT DESIGNATION G	1.0
60	GALVANIZED STEEL, MAST ARM	45.0	15.0	HPS, 250W, HORIZONTAL MOUNT	1.0	LUMINAIRE, LED, ROADWAY, OUTPUT DESIGNATION G	1.0
61	GALVANIZED STEEL, MAST ARM	45.0	15.0	HPS, 250W, HORIZONTAL MOUNT	1.0	LUMINAIRE, LED, ROADWAY, OUTPUT DESIGNATION G	1.0
62	GALVANIZED STEEL, MAST ARM	45.0	15.0	HPS, 250W, HORIZONTAL MOUNT	1.0	LUMINAIRE, LED, ROADWAY, OUTPUT DESIGNATION G	1.0
63	GALVANIZED STEEL, MAST ARM	50.0	15.0	HPS, 400W, HORIZONTAL MOUNT	1.0	LUMINAIRE, LED, ROADWAY, OUTPUT DESIGNATION H	1.0
64	GALVANIZED STEEL, MAST ARM	50.0	15.0	HPS, 400W, HORIZONTAL MOUNT	1.0	LUMINAIRE, LED, ROADWAY, OUTPUT DESIGNATION H	1.0
65	GALVANIZED STEEL, MAST ARM	50.0	15.0	HPS, 400W, HORIZONTAL MOUNT	1.0	LUMINAIRE, LED, ROADWAY, OUTPUT DESIGNATION H	1.0
66	GALVANIZED STEEL, MAST ARM	50.0	15.0	HPS, 400W, HORIZONTAL MOUNT	1.0	LUMINAIRE, LED, ROADWAY, OUTPUT DESIGNATION H	1.0
67	GALVANIZED STEEL, MAST ARM	50.0	15.0	HPS, 400W, HORIZONTAL MOUNT	1.0	LUMINAIRE, LED, ROADWAY, OUTPUT DESIGNATION H	1.0
68	GALVANIZED STEEL, MAST ARM	50.0	15.0	HPS, 400W, HORIZONTAL MOUNT	1.0	LUMINAIRE, LED, ROADWAY, OUTPUT DESIGNATION H	1.0
69	GALVANIZED STEEL, MAST ARM	50.0	15.0	HPS, 400W, HORIZONTAL MOUNT	1.0	LUMINAIRE, LED, ROADWAY, OUTPUT DESIGNATION H	1.0
70	GALVANIZED STEEL, MAST ARM	50.0	15.0	HPS, 400W, HORIZONTAL MOUNT	1.0	LUMINAIRE, LED, ROADWAY, OUTPUT DESIGNATION H	1.0
71	GALVANIZED STEEL, MAST ARM	50.0	15.0	HPS, 400W, HORIZONTAL MOUNT	1.0	LUMINAIRE, LED, ROADWAY, OUTPUT DESIGNATION H	1.0
72	GALVANIZED STEEL, MAST ARM	50.0	15.0	HPS, 400W, HORIZONTAL MOUNT	1.0	LUMINAIRE, LED, ROADWAY, OUTPUT DESIGNATION H	1.0
73	GALVANIZED STEEL, MAST ARM	50.0	15.0	HPS, 400W, HORIZONTAL MOUNT	1.0	LUMINAIRE, LED, ROADWAY, OUTPUT DESIGNATION H	1.0
74	GALVANIZED STEEL, MAST ARM	50.0	15.0	HPS, 400W, HORIZONTAL MOUNT	1.0	LUMINAIRE, LED, ROADWAY, OUTPUT DESIGNATION H	1.0
U-1	WALL MOUNTED	15.0	N/A	HPS, 150W, UNDERPASS	1.0	LUMINAIRE, LED, UNDERPASS, WALLMOUNT, OUTPUT DESIGNATION E	1.0
U-2	WALL MOUNTED	15.0	N/A	HPS, 150W, UNDERPASS	1.0	LUMINAIRE, LED, UNDERPASS, WALLMOUNT, OUTPUT DESIGNATION E	1.0
U-3	WALL MOUNTED	15.0	N/A	HPS, 150W, UNDERPASS	1.0	LUMINAIRE, LED, UNDERPASS, WALLMOUNT, OUTPUT DESIGNATION E	1.0
U-4	WALL MOUNTED	15.0	N/A	HPS, 150W, UNDERPASS	1.0	LUMINAIRE, LED, UNDERPASS, WALLMOUNT, OUTPUT DESIGNATION E	1.0

HIGHWAY LIGHTING
SHEET 12 OF 33

NOT TO SCALE

USER NAME = $USER$	DESIGNED -	REVISED -
	DRAWN -	REVISED -
PLOT SCALE = 1:301.946	CHECKED -	REVISED -
PLOT DATE = 12/16/2019	DATE -	REVISED -

STATE OF ILLINOIS
DEPARTMENT OF TRANSPORTATION

PROPOSED LIGHT POLE SCHEDULE
IL 6 & ALLEN ROAD INTERCHANGE – PEORIA COUNTY

SCALE: | SHEET OF SHEETS | STA. | TO STA.

F.A.P. RTE.	SECTION	COUNTY	TOTAL SHEETS	SHEET NO.
318	72[(7,7-1,6-1)RS-2; (7-2,3)RS]	PEORIA	180	139
		CONTRACT NO. 68C98		
		ILLINOIS	FED. AID PROJECT	

72[(7,7-1,6-1)RS-2(7-2,3)RS]

REV. 2/11/20

MODEL: Default
FILE NAME: pw:\\planroom.dot.illinois.gov:PWIDOT\Documents\IDOT Offices\District 4\Projects\D4 68C98\CADData\CADSheets\IL 6 Lighting (FINAL 12-12-19).dgn

Luminaire Performance Table

Illinois Department of Transportation

Project

Date	Contract Number	Section Number	County
12/08/19	68C98		Peoria

Marked Route Number	Municipality
IL-6	

Roadway

Lane Width	# of Lanes	Median Width	I.E.S. Surface Classification	Q-Zero Value
12	2	N/A	R3	0.7

Structure

Mounting Height	Arm Length	Set-Back	Number of Luminaires (Highmast & Sign Lighting Only)
15 FT	N/A	30 FT	

Luminaire

Description	I.E.S. Lateral Distribution	I.E.S. Vertical Distribution
Underpass Luminaire LED Output Desig E	Type V	Short

Total Light Loss Factor (LLF)	B-U-G Rating	Shields	Dimming Protocol
.684	B3-U0-G1	N/A	10V

Layout

Spacing (to Nearest 5 ft)	Configuration (Opposite, Staggered, 1 Sided, or Median)
35 FT	1 sided

Performance

Average Illuminance, E_{AVE} (fc)	Uniformity Ratio, E_{AVE}/E_{MIN}
0.9	3.0

Average Luminance, L_{AVE} (cd/m^2)	Uniformity Ratio, L_{AVE}/L_{MIN}	Uniformity Ratio, L_{MAX}/L_{MIN}	Veiling Luminance Ratio, L_V/L_{AVE}

Light Tresspass

Distance to ROW (behind pole)	Max. Horizontal Illuminance at ROW, E_H	Max. Vertical Illuminance at ROW, E_V

Notes

1. Set-Back is from Edge of Pavement (white line) except for sign luminaires when it is vertical and horizontal distance from the sign to the luminaire.
2. Lighting calculations shall be performed with all luminaires oriented toward and perpendicular to the roadway.
3. Total Light Loss Factor (LLF) = the product of "Lumen Maintenance" (LLD) = 0.9, "Dirt Depreciation" (LDD) = 0.8, and "Equipment Factors" (EF) = 0.95.
4. Performance requirements shall be the minimum acceptable standards of photometric performance for the luminaire, based on the given conditions listed above.

The contractor may tilt the luminaire, as appropriate, in accordance with the manufacturer's requirements to meet the performance requirements.

Printed 12/10/19 BDE 5630 (04/10/19)

Luminaire Performance Table

Illinois Department of Transportation

Project

Date	Contract Number	Section Number	County
12/08/19	68C98		Peoria

Marked Route Number	Municipality
IL-6	

Roadway

Lane Width	# of Lanes	Median Width	I.E.S. Surface Classification	Q-Zero Value
16	1	N/A	R3	0.7

Structure

Mounting Height	Arm Length	Set-Back	Number of Luminaires (Highmast & Sign Lighting Only)
45 FT	15 FT	20 FT	

Luminaire

Description	I.E.S. Lateral Distribution	I.E.S. Vertical Distribution
Luminaire LED Output Designation G	Type II	Medium

Total Light Loss Factor (LLF)	B-U-G Rating	Shields	Dimming Protocol
.684	B3-U0-G3	N/A	10V

Layout

Spacing (to Nearest 5 ft)	Configuration (Opposite, Staggered, 1 Sided, or Median)
170 FT	1 sided

Performance

Average Illuminance, E_{AVE} (fc)	Uniformity Ratio, E_{AVE}/E_{MIN}
0.9	3.0

Average Luminance, L_{AVE} (cd/m^2)	Uniformity Ratio, L_{AVE}/L_{MIN}	Uniformity Ratio, L_{MAX}/L_{MIN}	Veiling Luminance Ratio, L_V/L_{AVE}

Light Tresspass

Distance to ROW (behind pole)	Max. Horizontal Illuminance at ROW, E_H	Max. Vertical Illuminance at ROW, E_V

Notes

1. Set-Back is from Edge of Pavement (white line) except for sign luminaires when it is vertical and horizontal distance from the sign to the luminaire.
2. Lighting calculations shall be performed with all luminaires oriented toward and perpendicular to the roadway.
3. Total Light Loss Factor (LLF) = the product of "Lumen Maintenance" (LLD) = 0.9, "Dirt Depreciation" (LDD) = 0.8, and "Equipment Factors" (EF) = 0.95.
4. Performance requirements shall be the minimum acceptable standards of photometric performance for the luminaire, based on the given conditions listed above.

Printed 12/10/19 BDE 5630 (04/10/19)

Luminaire Performance Table

Illinois Department of Transportation

Project

Date	Contract Number	Section Number	County
12/08/19	68C98		Peoria

Marked Route Number	Municipality
IL-6	

Roadway

Lane Width	# of Lanes	Median Width	I.E.S. Surface Classification	Q-Zero Value
12	2	N/A	R3	0.7

Structure

Mounting Height	Arm Length	Set-Back	Number of Luminaires (Highmast & Sign Lighting Only)
50 FT	15 FT	20 FT	

Luminaire

Description	I.E.S. Lateral Distribution	I.E.S. Vertical Distribution
Luminaire LED Output Designation H	Type II	Medium

Total Light Loss Factor (LLF)	B-U-G Rating	Shields	Dimming Protocol
.684	B3-U0-G3	N/A	10V

Layout

Spacing (to Nearest 5 ft)	Configuration (Opposite, Staggered, 1 Sided, or Median)
265 FT	1 sided

Performance

Average Illuminance, E_{AVE} (fc)	Uniformity Ratio, E_{AVE}/E_{MIN}
0.9	3.0

Average Luminance, L_{AVE} (cd/m^2)	Uniformity Ratio, L_{AVE}/L_{MIN}	Uniformity Ratio, L_{MAX}/L_{MIN}	Veiling Luminance Ratio, L_V/L_{AVE}

Light Tresspass

Distance to ROW (behind pole)	Max. Horizontal Illuminance at ROW, E_H	Max. Vertical Illuminance at ROW, E_V

Notes

1. Set-Back is from Edge of Pavement (white line) except for sign luminaires when it is vertical and horizontal distance from the sign to the luminaire.
2. Lighting calculations shall be performed with all luminaires oriented toward and perpendicular to the roadway.
3. Total Light Loss Factor (LLF) = the product of "Lumen Maintenance" (LLD) = 0.9, "Dirt Depreciation" (LDD) = 0.8, and "Equipment Factors" (EF) = 0.95.
4. Performance requirements shall be the minimum acceptable standards of photometric performance for the luminaire, based on the given conditions listed above.

Printed 12/10/19 BDE 5630 (04/10/19)

HIGHWAY LIGHTING
SHEET 13 OF 33

NOT TO SCALE

USER NAME = $USER$	DESIGNED -	REVISED -
	DRAWN -	REVISED -
PLOT SCALE = 1:301.946	CHECKED -	REVISED -
PLOT DATE = 12/16/2019	DATE -	REVISED -

STATE OF ILLINOIS
DEPARTMENT OF TRANSPORTATION

PROPOSED LED LUMINAIRE PERFORMANCE TABLES
IL 6 & ALLEN RD. INTERCHANGE – PEORIA COUNTY

SCALE: | SHEET OF SHEETS | STA. | TO STA.

F.A.P. RTE.	SECTION	COUNTY	TOTAL SHEETS	SHEET NO.
318	72[(7,7-1,6-1)RS-2; (7-2,3)RS]	PEORIA	180	140
		CONTRACT NO. 68C98		
	ILLINOIS FED. AID PROJECT			

72[(7,7-1,6-1)RS-2(7-2,3)RS]

MODEL: Default
FILE NAME: pw:\\labnroom.dot.illinois.gov:PWIDOT\Documents\IDOT Offices\District 4\Projects\D3 68C98\CADData\CADsheets\IL 6 Lighting (FINAL 12-12-19).dgn

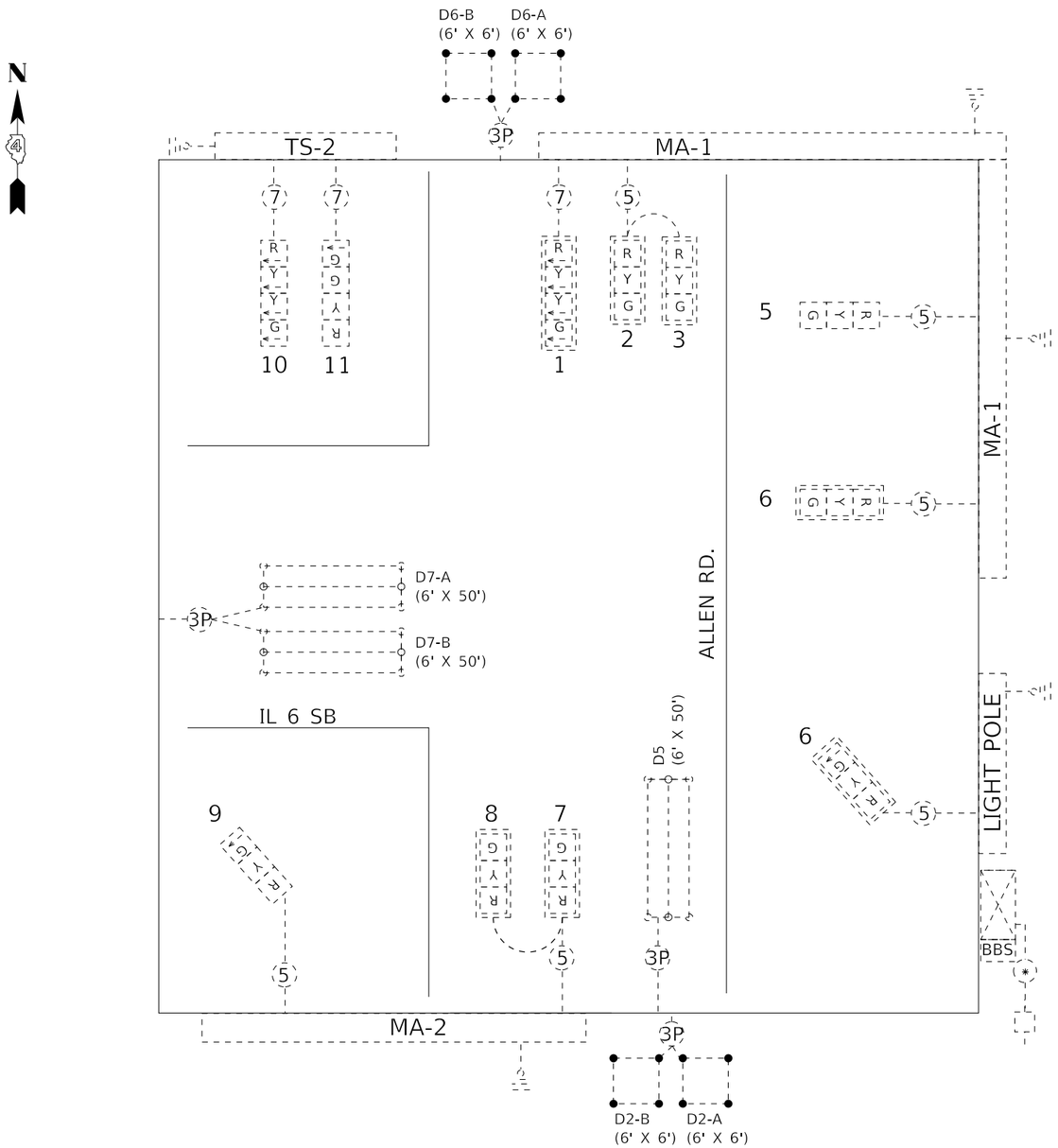

TRAFFIC SIGNALS LEGEND

- EX. CONTROLLER (SIGNAL) IN EX. CABINET
- EX. ELECTRIC SERVICE
- BBS — EX. BATTERY BACKUP SYSTEM
- EX. DETECTOR LOOP
- EX. 3 SEC. SIGNAL HEAD W/BACKPLATE
- EX. 3 SEC. SIGNAL HEAD
- EX. GROUND/SAFETY BOND
- EX. QUADRAPOLE LOOP
- (5) EX. 5/C NO. 14 SIGNAL CABLE
- (7) EX. 7/C NO. 14 SIGNAL CABLE
- (*) EX. #6 1/C CABLE
- (3P) EX. LEAD-IN #18, 3 PAIR T/S

EXISTING PHASE DIAGRAM

NAME OF INTERSECTION: IL 6 SB & ALLEN RD.

EXISTING CONTROLLER: ECONOLITE ASC/3 (TS-2 TYPE 2) IN EX. TYPE IV

TS-2 CABINET (16 POS. LOAD BAY)

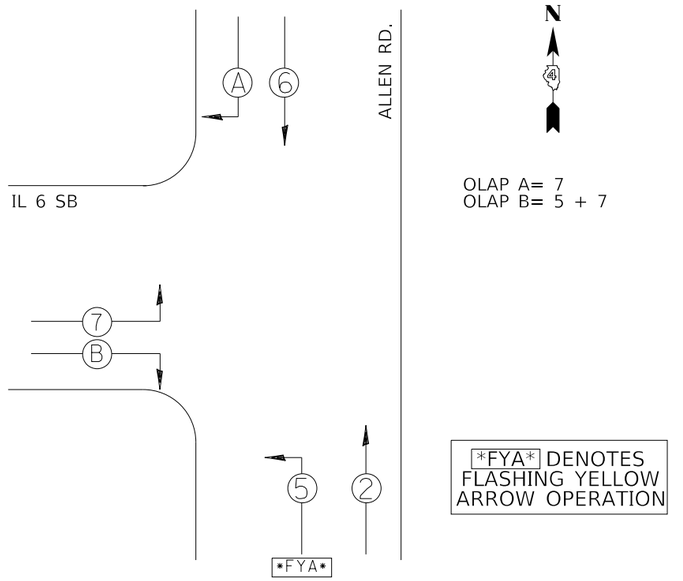

HIGHWAY LIGHTING
SHEET 14 OF 33

NOT TO SCALE

MODEL: Default
FILE NAME: pw:\\planroom.dot.illinois.gov:PWIDOT\Documents\IDOT Offices\District 4\Projects\D4 68C98\CADData\CAD\sheets\IL 6 Lighting (FINAL 12-12-19).dgn

USER NAME = $USER$	DESIGNED -	REVISED -	
	DRAWN -	REVISED -	
PLOT SCALE = 1:301.946	CHECKED -	REVISED -	
PLOT DATE = 12/16/2019	DATE -	REVISED -	

STATE OF ILLINOIS
DEPARTMENT OF TRANSPORTATION

EXISTING TRAFFIC SIGNAL CABLE & PHASE DIAGRAMS
IL 6 SB & ALLEN ROAD – PEORIA COUNTY

SCALE: | SHEET OF SHEETS | STA. | TO STA.

F.A.P. RTE.	SECTION	COUNTY	TOTAL SHEETS	SHEET NO.
318	72[(7,7-1,6-1)RS-2; (7-2,3)RS]	PEORIA	180	141
		CONTRACT NO. 68C98		
	ILLINOIS	FED. AID PROJECT		

72[(7,7-1,6-1)RS-2(7-2,3)RS]

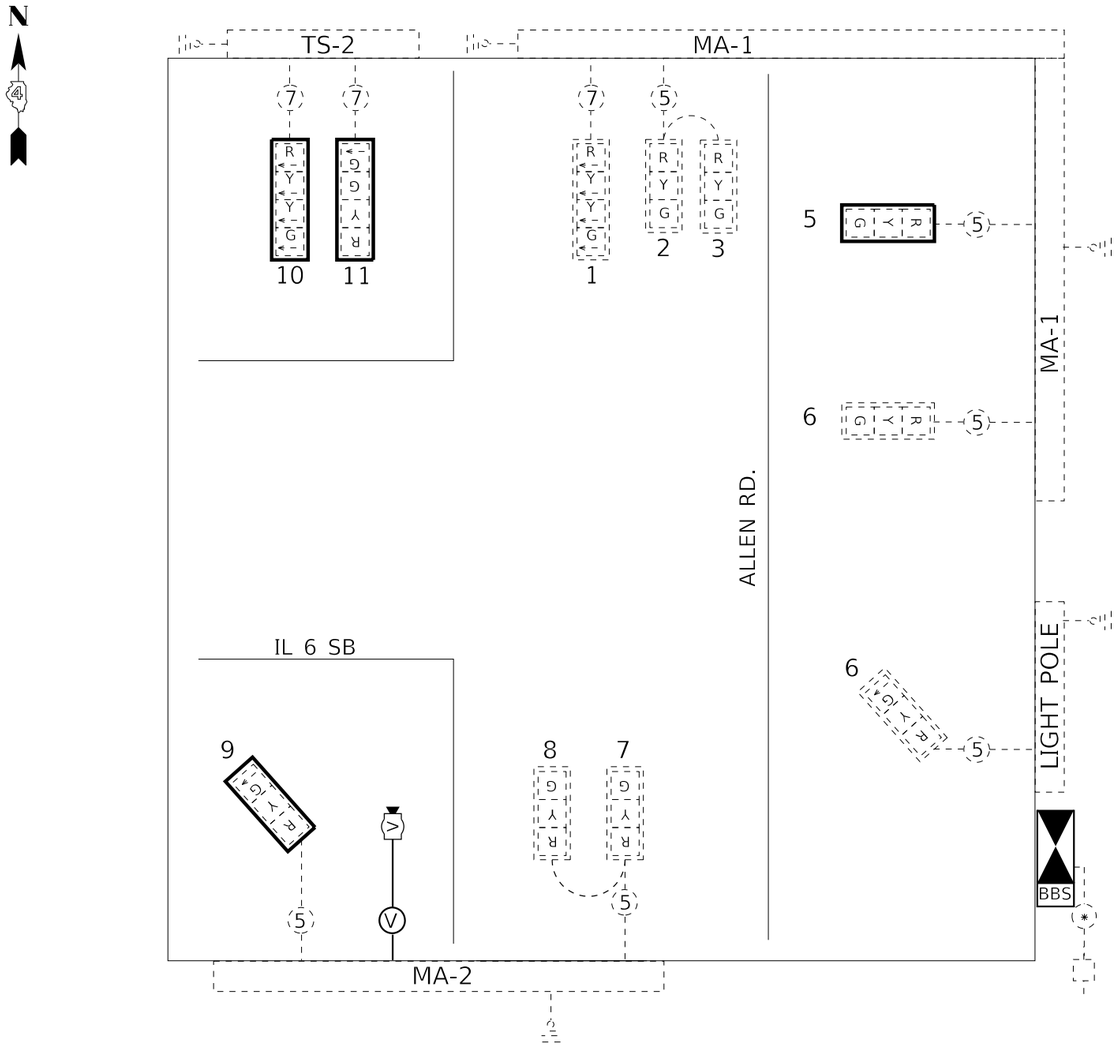

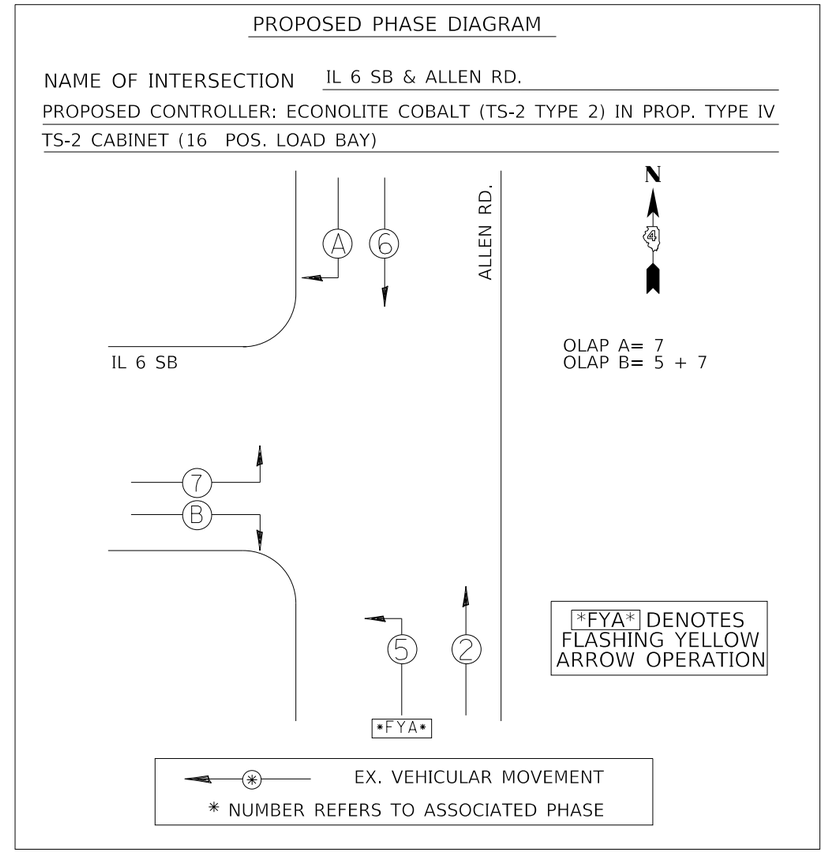

TRAFFIC SIGNALS LEGEND

- PROP. CONTROLLER (SIGNAL) IN PROP. CABINET
- EX. ELECTRIC SERVICE
- BBS PROP. BATTERY BACKUP SYSTEM
- V PROP. VEHICLE VIDEO DETECTION CAMERA
- EX. 3 SEC. SIGNAL HEAD W/BACKPLATE
- EX. 3 SEC. SIGNAL HEAD
- EX. 3 SEC. SIGNAL HEAD W/ PROP. BACKPLATE
- EX. GROUND/SAFETY BOND
- 5 EX. 5/C NO. 14 SIGNAL CABLE
- 7 EX. 7/C NO. 14 SIGNAL CABLE
- V PROP. VEHICLE VIDEO DETECTION CABLE
- * EX. #6 1/C CABLE

HIGHWAY LIGHTING
SHEET 15 OF 33

NOT TO SCALE

USER NAME = $USER$	DESIGNED -	REVISED -	STATE OF ILLINOIS DEPARTMENT OF TRANSPORTATION	PROPOSED TRAFFIC SIGNAL CABLE & PHASE DIAGRAMS IL 6 SB & ALLEN ROAD – PEORIA COUNTY	F.A.P. RTE.	SECTION	COUNTY	TOTAL SHEETS	SHEET NO.
	DRAWN -	REVISED -			318	72[(7,7-1,6-1)RS-2; (7-2,3)RS]	PEORIA	180	142
PLOT SCALE = 1:301.946	CHECKED -	REVISED -					CONTRACT NO. 68C98		
PLOT DATE = 12/16/2019	DATE -	REVISED -		SCALE: SHEET OF SHEETS STA. TO STA.		ILLINOIS	FED. AID PROJECT		

PEORIA 180 68C98

MODEL: Default
FILENAME: pw:\\planroom.dot.illinois.gov:PWIDOT\Documents\IDOT Offices\District 4\Projects\D4_68C98\CADData\CADsheets\IL 6 Lighting (FINAL 12-12-19).dgn

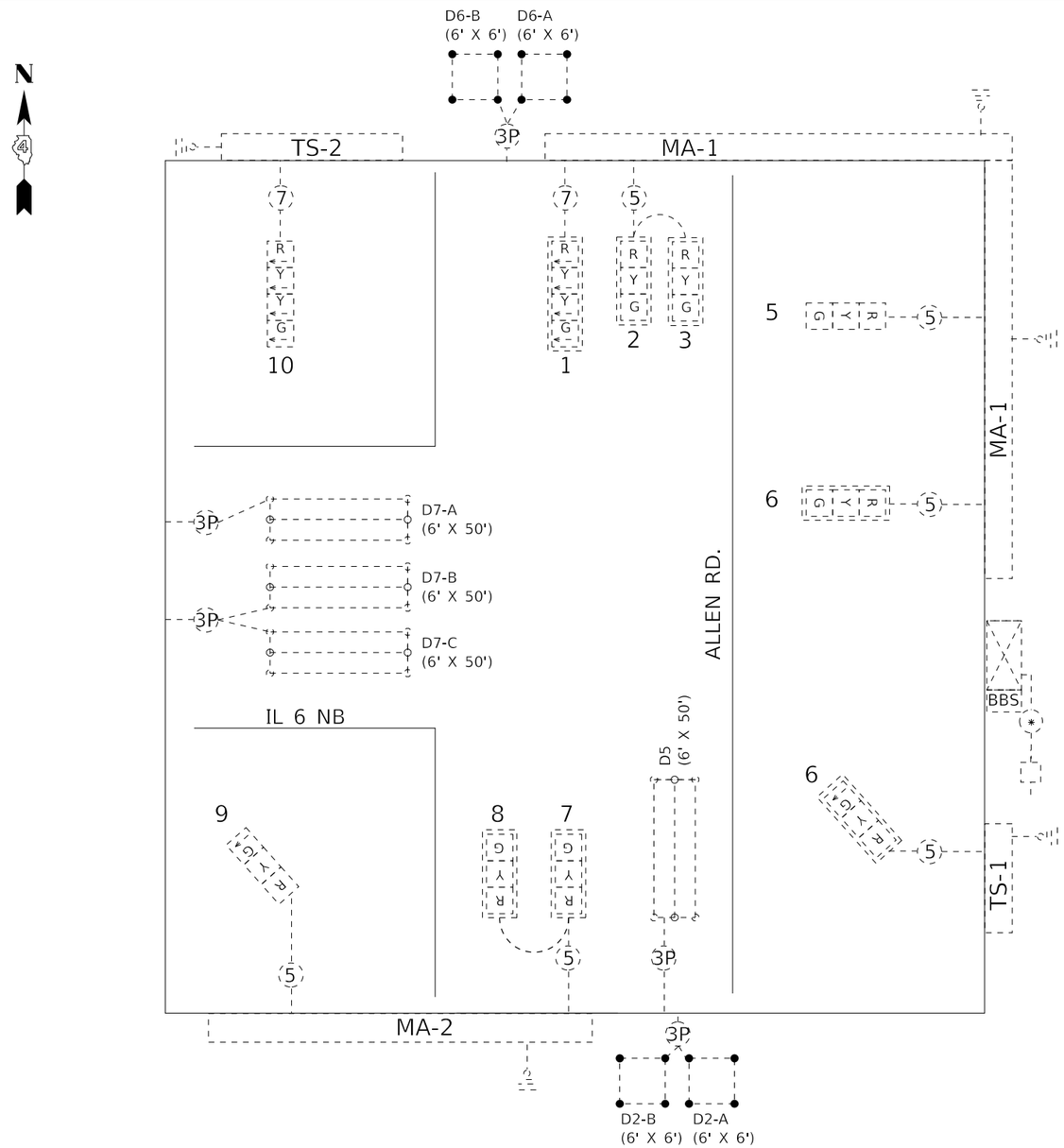

TRAFFIC SIGNALS LEGEND

- EX. CONTROLLER (SIGNAL) IN EX. CABINET
- EX. ELECTRIC SERVICE
- BBS — EX. BATTERY BACKUP SYSTEM
- EX. DETECTOR LOOP
- EX. 3 SEC. SIGNAL HEAD W/BACKPLATE
- EX. 3 SEC. SIGNAL HEAD
- EX. GROUND/SAFETY BOND
- EX. QUADRAPOLE LOOP
- (5) EX. 5/C NO. 14 SIGNAL CABLE
- (7) EX. 7/C NO. 14 SIGNAL CABLE
- (*) EX. #6 1/C CABLE
- (3P) EX. LEAD-IN #18, 3 PAIR T/S

EXISTING PHASE DIAGRAM

NAME OF INTERSECTION: IL 6 NB & ALLEN RD.

EXISTING CONTROLLER: ECONOLITE ASC/3 (TS-2 TYPE 2) IN EX. TYPE IV

TS-2 CABINET (16 POS. LOAD BAY)

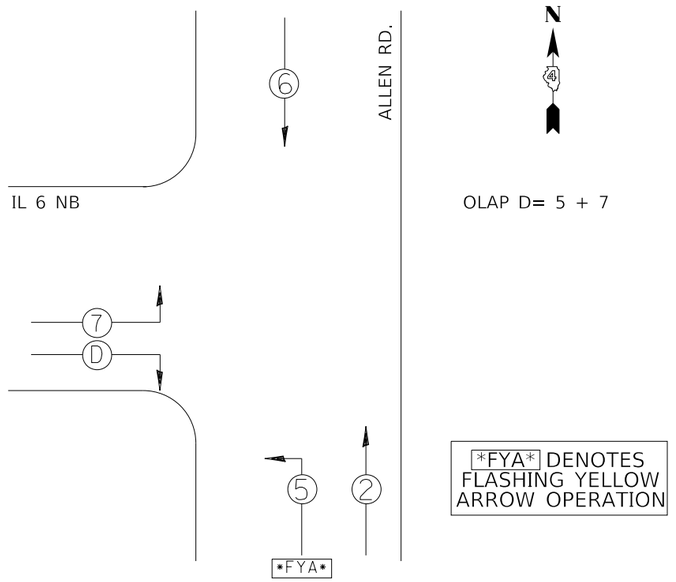

HIGHWAY LIGHTING
SHEET 16 OF 33

NOT TO SCALE

USER NAME = $USER$	DESIGNED -	REVISED -	
	DRAWN -	REVISED -	
PLOT SCALE = 1:301.946	CHECKED -	REVISED -	
PLOT DATE = 12/16/2019	DATE -	REVISED -	

STATE OF ILLINOIS
DEPARTMENT OF TRANSPORTATION

EXISTING TRAFFIC SIGNAL CABLE & PHASE DIAGRAMS
IL 6 NB & ALLEN ROAD – PEORIA COUNTY

SCALE: | SHEET OF SHEETS | STA. | TO STA.

F.A.P. RTE.	SECTION	COUNTY	TOTAL SHEETS	SHEET NO.
318	72[(7,7-1,6-1)RS-2; (7-2,3)RS]	PEORIA	180	143
		CONTRACT NO. 68C98		
	ILLINOIS	FED. AID PROJECT		

72[(7,7-1,6-1)RS-2(7-2,3)RS]

PEORIA 180 68C98

MODEL: Default
FILENAME: pw:\\planroom.dot.illinois.gov:PWIDOT\Documents\IDOT Offices\District 4\Projects\D4 68C98\CADData\CAD\sheets\IL 6 Lighting (FINAL 12-12-19).dgn

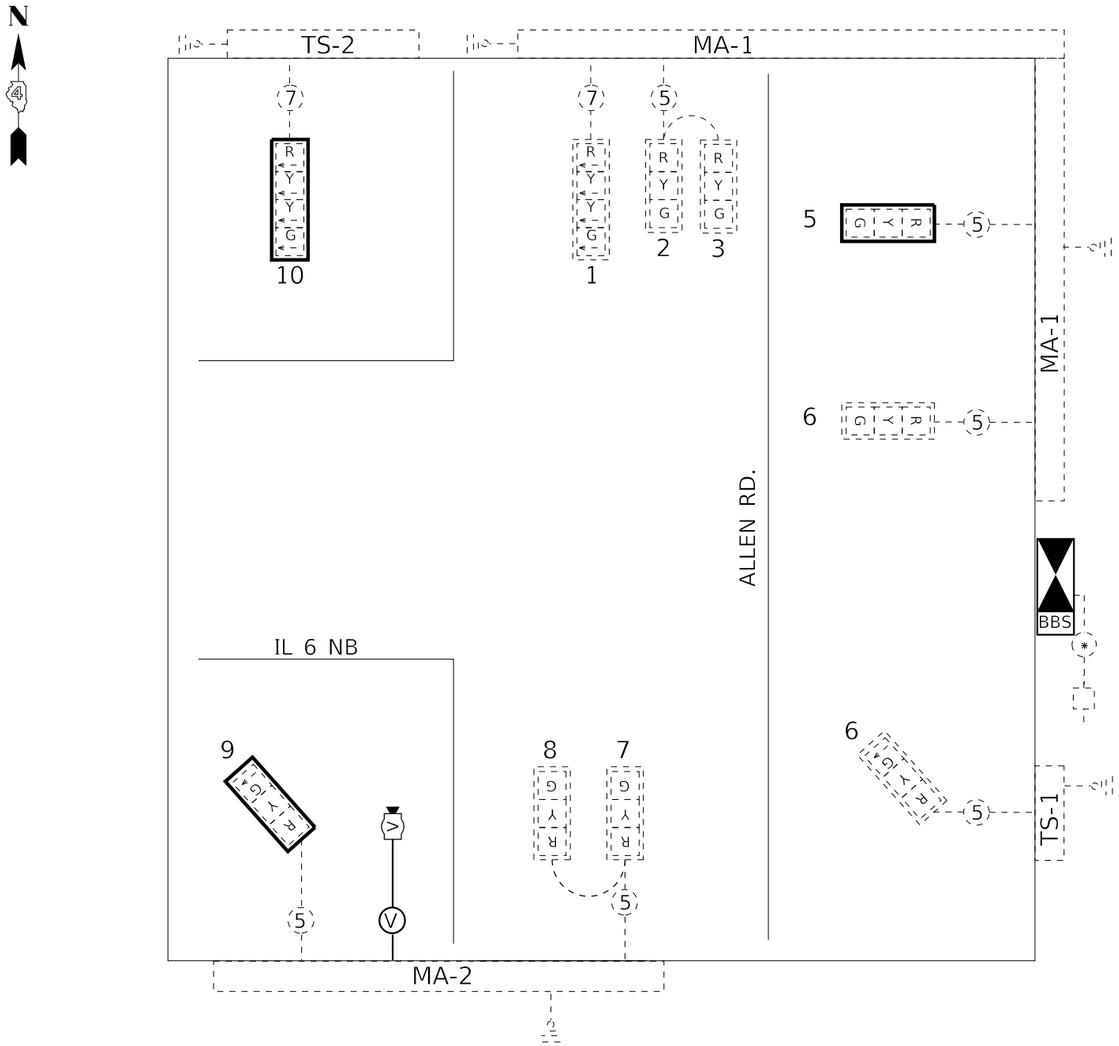

TRAFFIC SIGNALS LEGEND

- PROP. CONTROLLER (SIGNAL) IN PROP. CABINET
- EX. ELECTRIC SERVICE
- PROP. BATTERY BACKUP SYSTEM
- PROP. VEHICLE VIDEO DETECTION CAMERA
- EX. 3 SEC. SIGNAL HEAD W/BACKPLATE
- EX. 3 SEC. SIGNAL HEAD
- EX. 3 SEC. SIGNAL HEAD W/ PROP. BACKPLATE
- EX. GROUND/SAFETY BOND
- (5) EX. 5/C NO. 14 SIGNAL CABLE
- (7) EX. 7/C NO. 14 SIGNAL CABLE
- (V) PROP. VEHICLE VIDEO DETECTION CABLE
- (*) EX. #6 1/C CABLE

PROPOSED PHASE DIAGRAM

NAME OF INTERSECTION IL 6 NB & ALLEN RD.

PROPOSED CONTROLLER: ECONOLITE COBALT (TS-2 TYPE 2) IN PROP. TYPE IV TS-2 CABINET (16 POS. LOAD BAY)

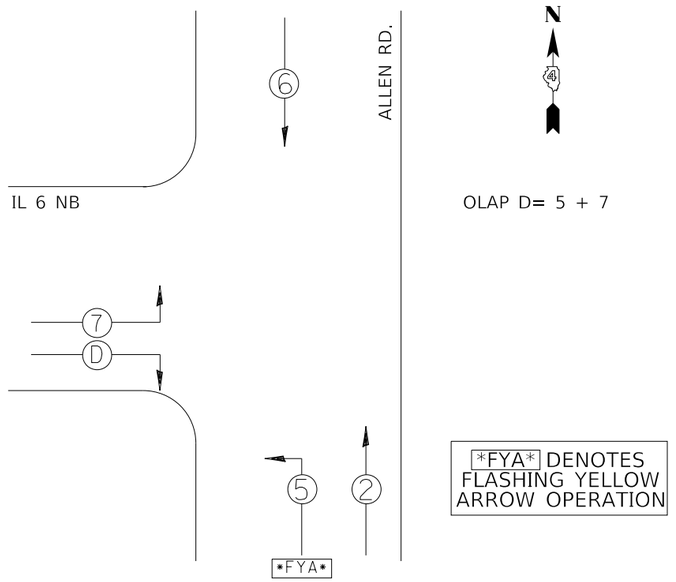

HIGHWAY LIGHTING
SHEET 17 OF 33

NOT TO SCALE

USER NAME = $USER$	DESIGNED -	REVISED -	
	DRAWN -	REVISED -	
PLOT SCALE = 1:301.946	CHECKED -	REVISED -	
PLOT DATE = 12/16/2019	DATE -	REVISED -	

STATE OF ILLINOIS
DEPARTMENT OF TRANSPORTATION

PROPOSED TRAFFIC SIGNAL CABLE & PHASE DIAGRAMS
IL 6 NB & ALLEN ROAD – PEORIA COUNTY

SCALE: | SHEET OF SHEETS | STA. TO STA.

F.A.P. RTE.	SECTION	COUNTY	TOTAL SHEETS	SHEET NO.
318	72[(7,7-1,6-1)RS-2; (7-2,3)RS]	PEORIA	180	144
		CONTRACT NO. 68C98		
	ILLINOIS	FED. AID PROJECT		

72[(7,7-1,6-1)RS-2(7-2,3)RS]

PEORIA 180 68C98

MODEL: Default
FILENAME: pw:\\planroom.dot.illinois.gov:PWIDOT\Documents\IDOT Offices\District 4\Projects\D4_68C98\CADD\stat\CADSheets\IL 6 Lighting (FINAL 12-12-19).dgn

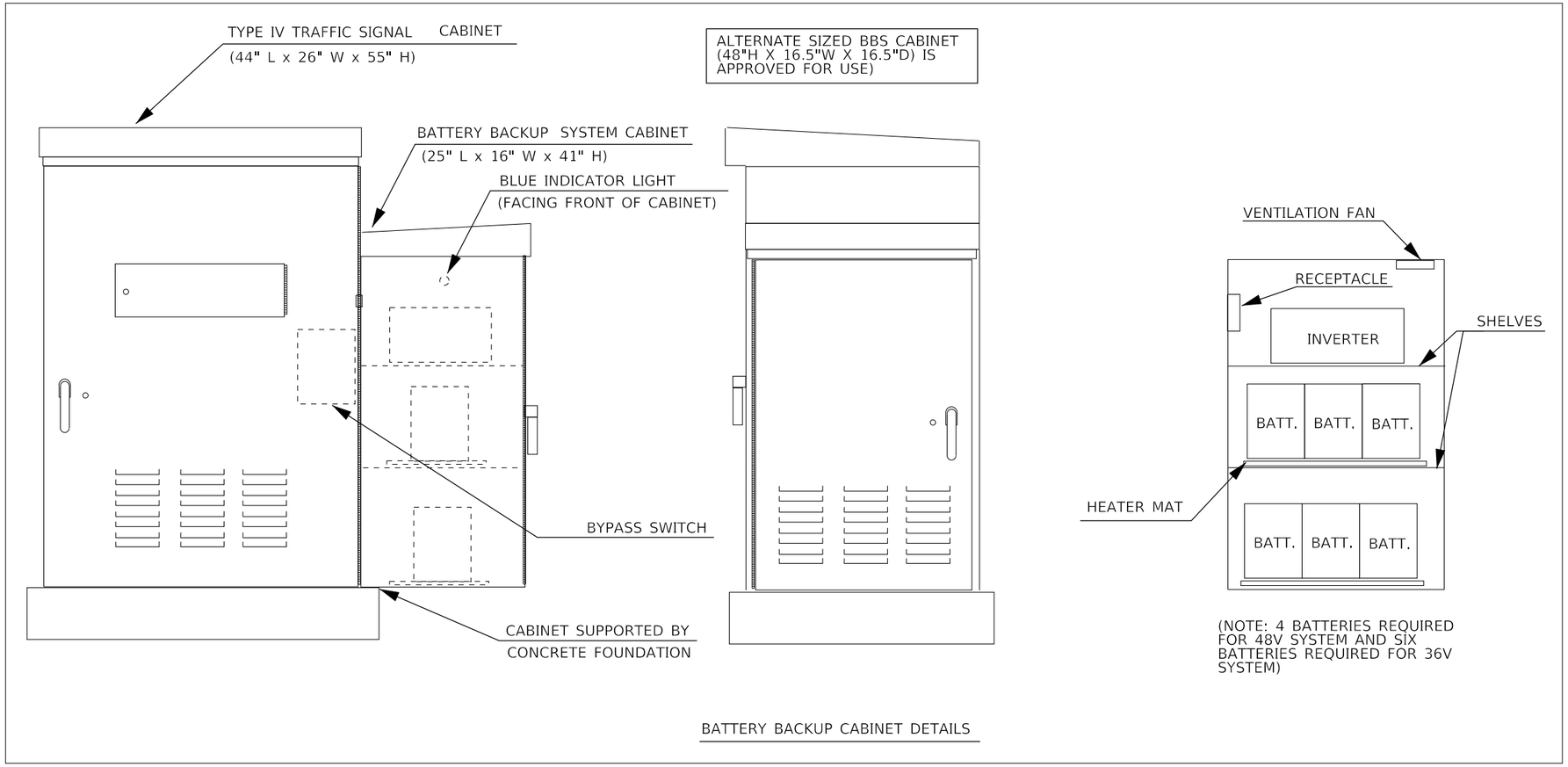

BATTERY BACKUP CABINET DETAILS

NOTES

1. THE BATTERY BACKUP SYSTEM CABINET SHALL BE A NEMA TYPE 3R CABINET WITH MINIMUM OUTSIDE DIMENSIONS OF 41" (H) X 25" (W) X 16" (D). THE CABINET SHALL BE EQUIPPED WITH A THREE POINT LATCHING MECHANISM, TWO SHELVES, THERMOSTATICALLY CONTROLLED VENTILATION FAN, AND A POWER RECEPTACLE. THE CABINET SHALL BE MOUNTED TO THE SIDE OF THE PROPOSED TYPE IV CABINET WITH THE BOTTOM OF THE CABINET SUPPORTED BY THE CONCRETE FOUNDATION.
2. ALL CABINET LIGHTS, HEATER STRIPS, VENTILATION FANS, AND SERVICE RECEPTACLES SHALL BE BYPASSED WHEN THE BATTERY BACKUP UNIT IS OPERATING IN BATTERY MODE.
3. THE BATTERY BACKUP UNITS CONTACTS SHALL BE WIRED TO PROVIDE LOCAL CONTROLLER ALARMS (AS AVAILABLE IN THE PROPOSED CABINETS).
4. THE BYPASS SWITCH SHALL BE AUTOMATIC AND SHALL BE INSTALLED IN THE BBS CABINET.
5. THE CABINET SHALL BE EQUIPPED WITH A DELUXE PLEATED AIR FILTER AND PLEXIGLASS SHIELDS FOR ALL TERMINALS CARRYING LINE VOLTAGE.

HIGHWAY LIGHTING
SHEET 18 OF 33

NOT TO SCALE

PEORIA 180 68C98
MODEL: Default
FILENAME: pw:\\planroom.dot.illinois.gov:PWIDOT\Documents\IDOT Offices\District 4\Projects\D4_68C98\CADData\CADsheets\IL 6 Lighting (FINAL 12-12-19).dgn

USER NAME = $USER$	DESIGNED -	REVISED -	STATE OF ILLINOIS DEPARTMENT OF TRANSPORTATION
	DRAWN -	REVISED -	
PLOT SCALE = 1:301.946	CHECKED -	REVISED -	
PLOT DATE = 12/16/2019	DATE -	REVISED -	

BATTERY BACKUP SYSTEM CABINET DETAIL

SCALE: SHEET OF SHEETS STA. TO STA.

F.A.P. RTE.	SECTION	COUNTY	TOTAL SHEETS	SHEET NO.
318	72[(7,7-1,6-1)RS-2; (7-2,3)RS]	PEORIA	180	145

CONTRACT NO. 68C98

ILLINOIS FED. AID PROJECT

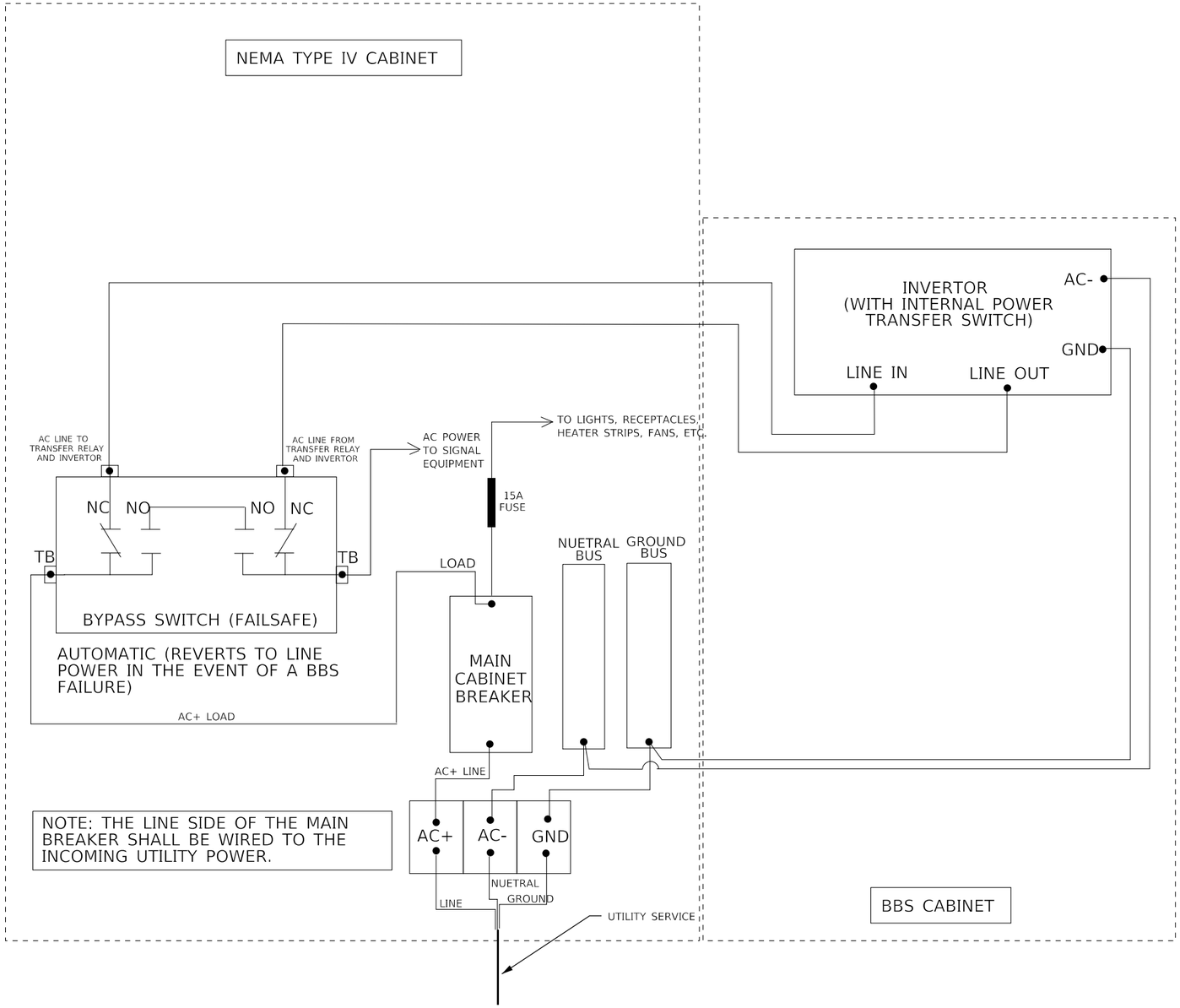

HIGHWAY LIGHTING
SHEET 19 OF 33

NOT TO SCALE

MODEL: Default
FILE NAME: pw:\\planroom.dot.illinois.gov:PWIDOT1Documents\IDOT Offices\District 4\Projects\D4_68C98\CAD\sta\CAD\sheets\IL 6 Lighting (FINAL 12-12-19).dgn

USER NAME = $USER$	DESIGNED -	REVISED -	**STATE OF ILLINOIS**	**BATTERY BACKUP SYSTEM CABINET WIRING DIAGRAM**	F.A.P. RTE. 318 | SECTION 72[(7,7-1,6-1)RS-2; (7-2,3)RS] | COUNTY PEORIA | TOTAL SHEETS 180 | SHEET NO. 146
	DRAWN -	REVISED -	**DEPARTMENT OF TRANSPORTATION**		CONTRACT NO. 68C98
PLOT SCALE = 1:301.946	CHECKED -	REVISED -			ILLINOIS | FED. AID PROJECT
PLOT DATE = 12/16/2019	DATE -	REVISED -		SCALE: | SHEET OF SHEETS | STA. TO STA.	

72[(7,7-1,6-1)RS-2(7-2,3)RS]

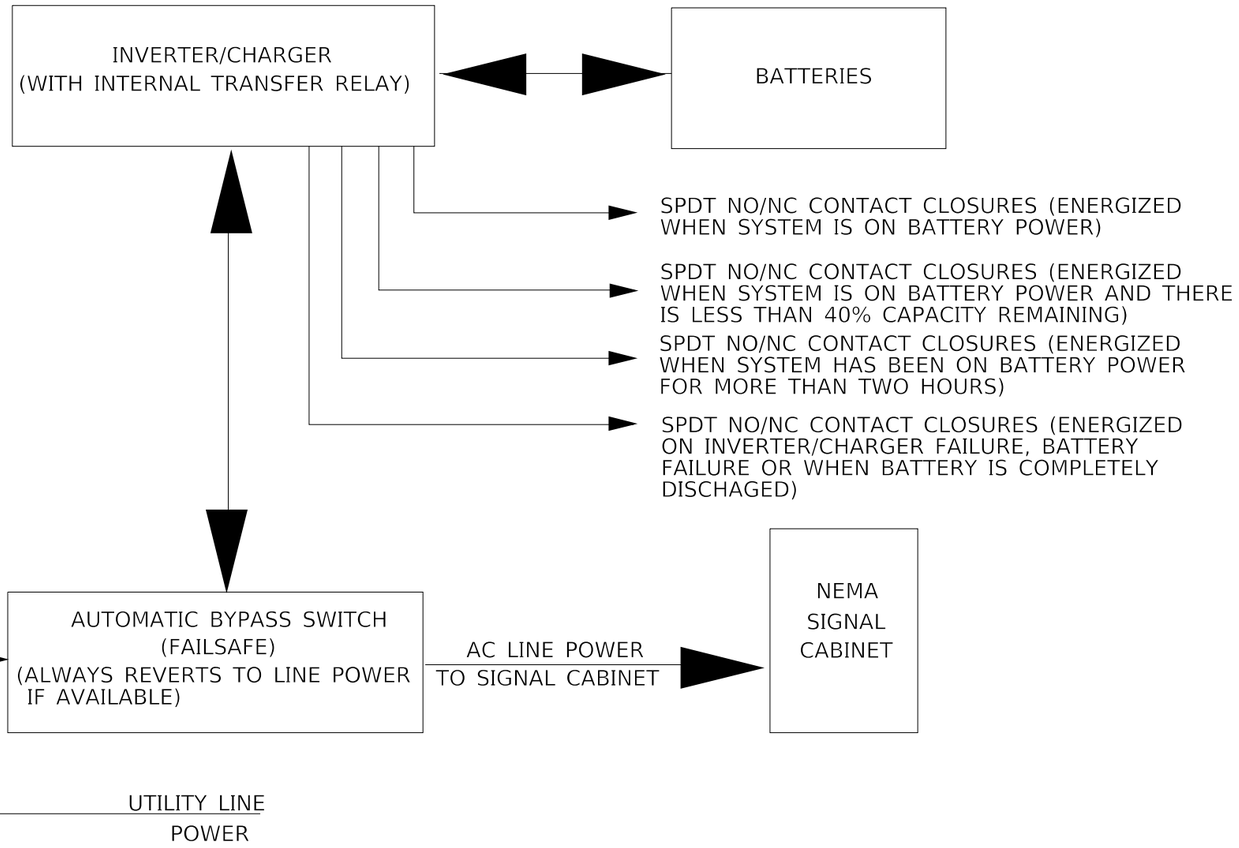

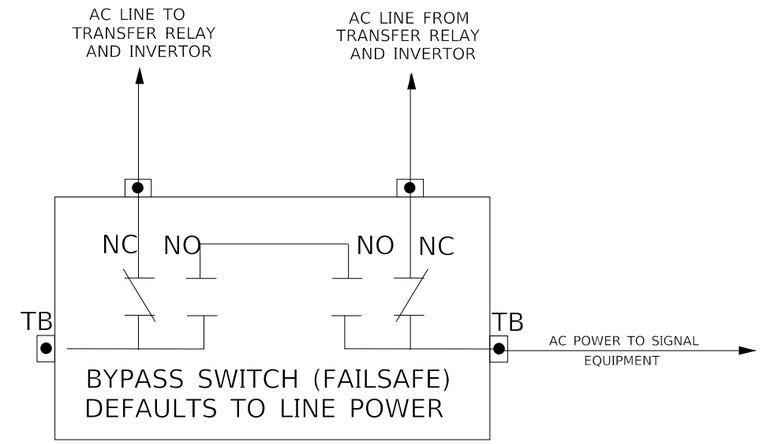

NOTES:

1. TB - #8 TERMINAL BLOCKS
2. NO - NORMALLY OPEN
3. NC - NORMALLY CLOSED
4. NO/NC CONTACTS SHALL ALL TOGGLE SIMULTANEOUSLY WITH A SINGLE MANUALLY OPERATED SWITCH.
5. THE MANUAL BYPASS SWITCH SHALL ONLY SWITCH LINE POWER. THE NEUTRAL AND EQUIPMENT GROUND SHALL NOT BE SWITCHED AND SHALL BE CONNECTED TO THE NEMA CABINET BUSSES.

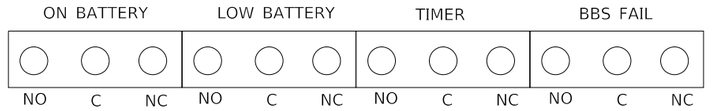

NO/NC CONTACTS MAY SHARE OR USE SEPARATE COMMONS.

PEORIA

HIGHWAY LIGHTING
SHEET 20 OF 33

NOT TO SCALE

MODEL: Default
FILE NAME: pw:\\planroom.dot.illinois.gov:PWIDOT1Documents\IDOT Offices\District 4\Projects\D4_68C98\CAD\Data\CAD\sheets\IL_6 Lighting (FINAL 12-12-19).dgn

USER NAME = $USER$	DESIGNED -	REVISED -	**STATE OF ILLINOIS**	**BATTERY BACKUP SYSTEM BLOCK AND BYPASS SWITCH DIAGRAMS**	
	DRAWN -	REVISED -	**DEPARTMENT OF TRANSPORTATION**		
PLOT SCALE = 1:301.946	CHECKED -	REVISED -			
PLOT DATE = 12/16/2019	DATE -	REVISED -		SCALE: SHEET OF SHEETS STA. TO STA.	

F.A.P. RTE.	SECTION	COUNTY	TOTAL SHEETS	SHEET NO.
318	72[(7,7-1,6-1)RS-2; (7-2,3)RS]	PEORIA	180	147
		CONTRACT NO. 68C98		
	ILLINOIS	FED. AID PROJECT		

ROUTE	SECTION	COUNTY	
F.A. 405	72-6-7HL	PEORIA	147 (C)
MAP	STA.	TO STA.	

DESCRIPTION	UNIT	QTY.
REMOVE EXISTING LIGHTING SYSTEM	L SUM	1.0

REMOVAL LEGEND	
(R)	REMOVAL ITEM

NOTES:
1. THE CONTRACTOR SHALL REMOVE EXISTING METAL HELIX FOUNDATIONS AND BACKFILLING AS REQUIRED TO MATCH THE EXISTING GRADE.

REMOVE EXISTING LIGHTING SYSTEM - QTY. 1 EACH (INCLUDES ALL ITEMS LISTED BELOW)	
THE FOLLOWING ITEMS SHALL BE REMOVED AND DISPOSED OF BY THE CONTRACTOR OFF OF THE RIGHT-OF-WAY. THE SALVAGE VALUE OF THIS EQUIPMENT SHALL BE REFLECTED IN THE UNIT BID PRICE FOR "REMOVE EXISTING LIGHTING SYSTEM."	
QTY.	DESCRIPTION
1.0	LIGHTING CONTROLLER
1.0	ELECTRICAL SERVICE INSTALLATION
27.0	REMOVAL OF LIGHTING UNIT, NO SALVAGE
21.0	LIGHT POLE FOUNDATION
ALL	ELECTRIC CABLE (NOT BEING USED IN PROPOSED INSTALLATION)
ALL	CONDUIT ATTACHED TO STRUCTURE (NOT BEING USED IN PROPOSED INSTALLATION)
NOTE: ALL EXISTING UNDERGROUND CONDUIT SHALL BE ABANDONED IN PLACE.	
THE FOLLOWING ITEMS SHALL BE REMOVED AND DELIVERED TO THE IDOT PEORIA WEST MAINTENANCE FACILITY AT 6505 W. ROUTE 150, EDWARDS.	
QTY.	DESCRIPTION
1.0	GALVANIZED STEEL LIGHT POLE, 45 FT. M.H. TENON TOP
1.0	GALVANIZED STEEL LIGHT POLE, 45 FT. M.H. TENON TOP-TWIN

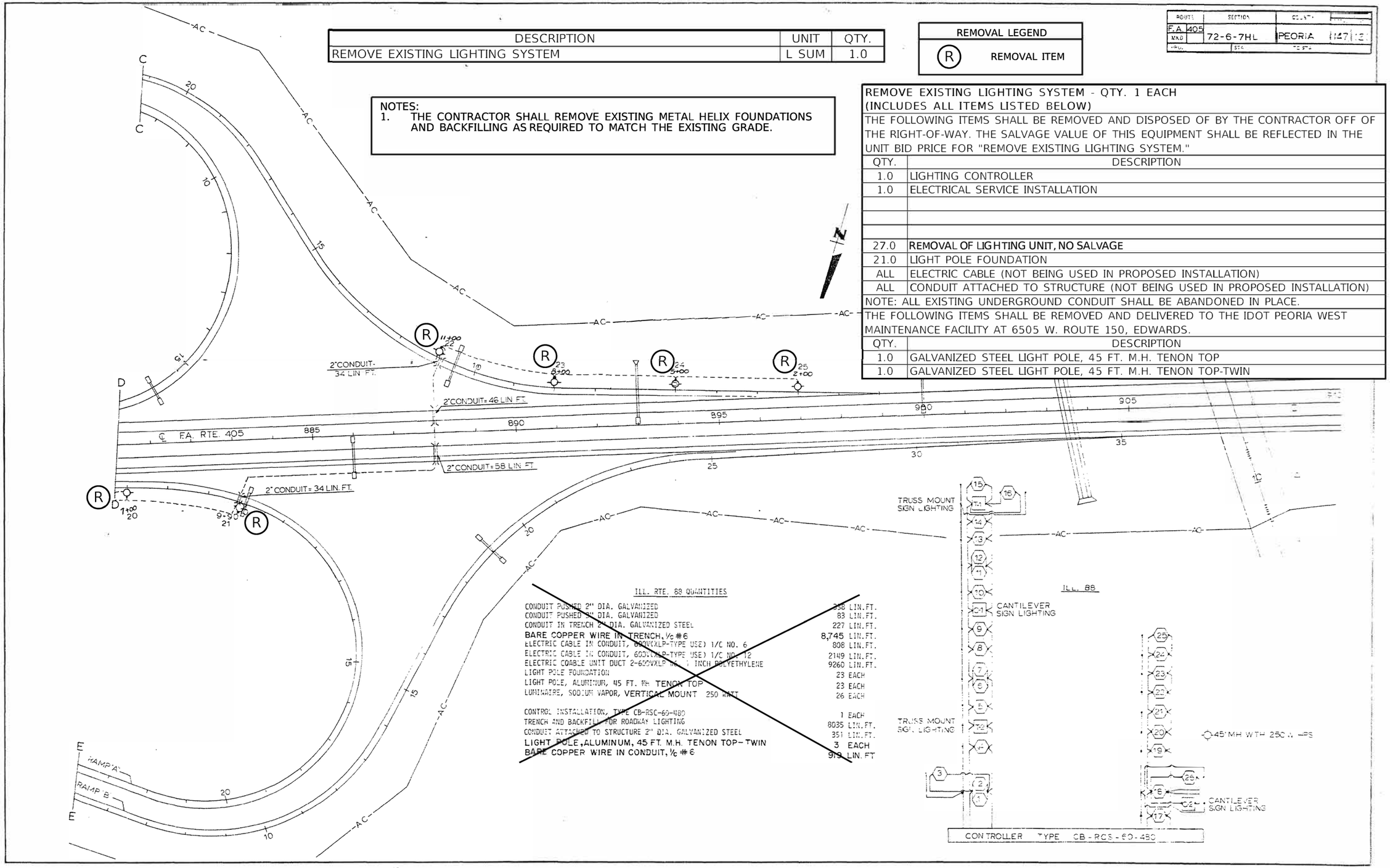

ILL. RTE. 88 QUANTITIES

CONDUIT PUSHED 2" DIA. GALVANIZED	338 LIN.FT.
CONDUIT PUSHED 2½" DIA. GALVANIZED	83 LIN.FT.
CONDUIT IN TRENCH 2" DIA. GALVANIZED STEEL	227 LIN.FT.
BARE COPPER WIRE IN TRENCH, ½c #6	8,745 LIN.FT.
ELECTRIC CABLE IN CONDUIT, 600VXLP-TYPE USE) 1/C NO. 6	808 LIN.FT.
ELECTRIC CABLE IN CONDUIT, 600VXLP-TYPE USE) 1/C NO. 12	2149 LIN.FT.
ELECTRIC COABLE UNIT DUCT 2-600VXLP #6 , 1 INCH POLYETHYLENE	9260 LIN.FT.
LIGHT POLE FOUNDATION	23 EACH
LIGHT POLE, ALUMINUM, 45 FT. M. TENON TOP	23 EACH
LUMINAIRE, SODIUM VAPOR, VERTICAL MOUNT 250 WATT	26 EACH
CONTROL INSTALLATION, TYPE CB-RSC-60-480	1 EACH
TRENCH AND BACKFILL FOR ROADWAY LIGHTING	8035 LIN.FT.
CONDUIT ATTACHED TO STRUCTURE 2" DIA. GALVANIZED STEEL	351 LIN.FT.
LIGHT POLE, ALUMINUM, 45 FT. M.H. TENON TOP-TWIN	3 EACH
BARE COPPER WIRE IN CONDUIT, ½c #6	919 LIN.FT.

HIGHWAY LIGHTING SHEET 21 OF 33
NOT TO SCALE

USER NAME = $USER$	DESIGNED -	REVISED -	
	DRAWN -	REVISED -	
PLOT SCALE = 1:301.946	CHECKED -	REVISED -	
PLOT DATE = 12/16/2019	DATE -	REVISED -	

STATE OF ILLINOIS
DEPARTMENT OF TRANSPORTATION

LIGHTING REMOVAL PLANS
IL 6 & IL 40 (KNOXVILLE AVE.) INTERCHANGE – PEORIA COUNTY

SCALE: | SHEET OF SHEETS | STA. | TO STA.

F.A.P. RTE.	SECTION	COUNTY	TOTAL SHEETS	SHEET NO.
318	72(7,7-1,6-1)RS-2; (7-2,3)RS]	PEORIA	180	148
		CONTRACT NO. 68C98		
	ILLINOIS FED. AID PROJECT			

72[(7,7-1,6-1)RS-2(7-2,3)RS]

REV. 2/11/20

MODEL: Default
FILE NAME: pw:\\planroom.dot.illinois.gov:PWIDOT\Documents\IDOT Offices\District 4\Projects\104 68C98\CADData\CADsheets\SL 6 Lighting (FINAL 12-12-19).dgn

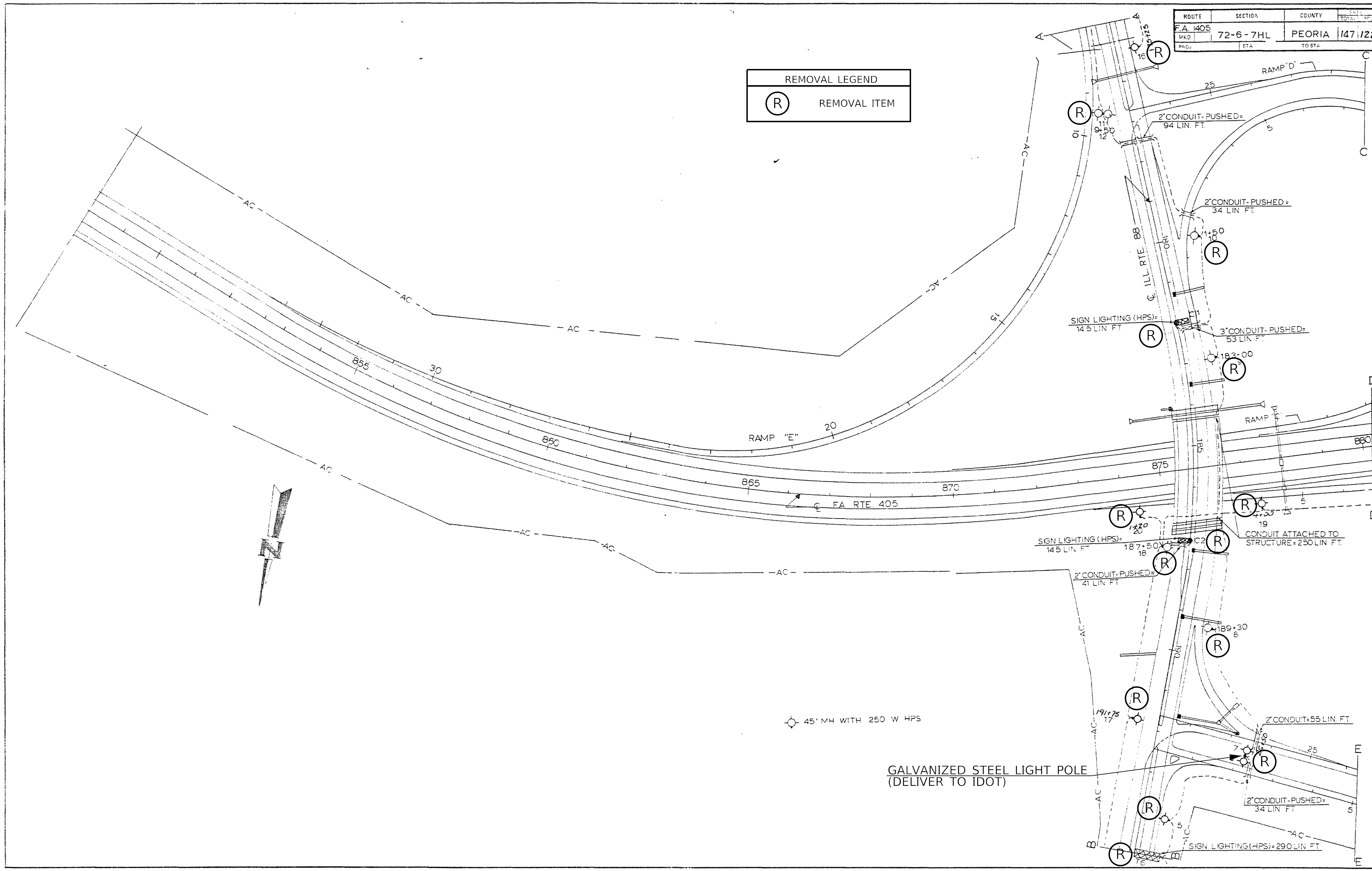

HIGHWAY LIGHTING SHEET 22 OF 33
NOT TO SCALE

USER NAME = $USER$	DESIGNED -	REVISED -	**STATE OF ILLINOIS DEPARTMENT OF TRANSPORTATION**
	DRAWN -	REVISED -	
PLOT SCALE = 1:301.946	CHECKED -	REVISED -	
PLOT DATE = 12/16/2019	DATE -	REVISED -	

LIGHTING REMOVAL PLANS – CONTINUED
IL 6 & IL 40 (KNOXVILLE AVE.) INTERCHANGE – PEORIA COUNTY

SCALE: SHEET OF SHEETS STA. TO STA.

F.A.P. RTE.	SECTION	COUNTY	TOTAL SHEETS	SHEET NO.
318	72[(7,7-1,6-1)RS-2; (7-2,3)RS]	PEORIA	180	149
		CONTRACT NO. 68C98		
	ILLINOIS FED. AID PROJECT			

72[(7,7-1,6-1)RS-2(7-2,3)RS]

MODEL: Default
FILE NAME: pw:\\planroom.dot.illinois.gov:PWIDOT\Documents\IDOT Offices\District 4\Projects\D4_68C98\CADData\CADsheets\IL 6 Lighting (FINAL 12-12-19).dgn

ROUTE	SECTION	COUNTY	SHEET TOTAL	SHEET NO.
F.A. 405	72-6-7HL	PEORIA	147	123
MKD				
PLAN	STA.	TO STA.		

N

REMOVAL LEGEND	
(R)	REMOVAL ITEM

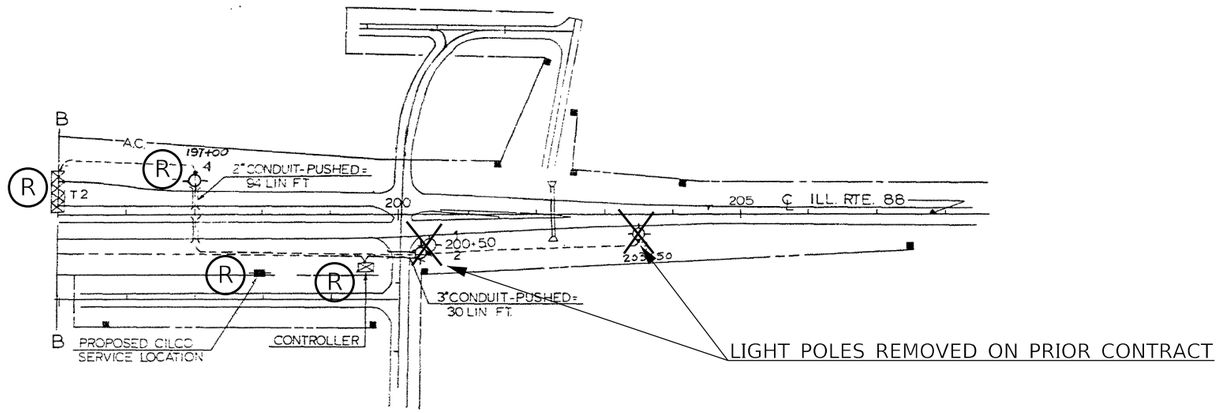

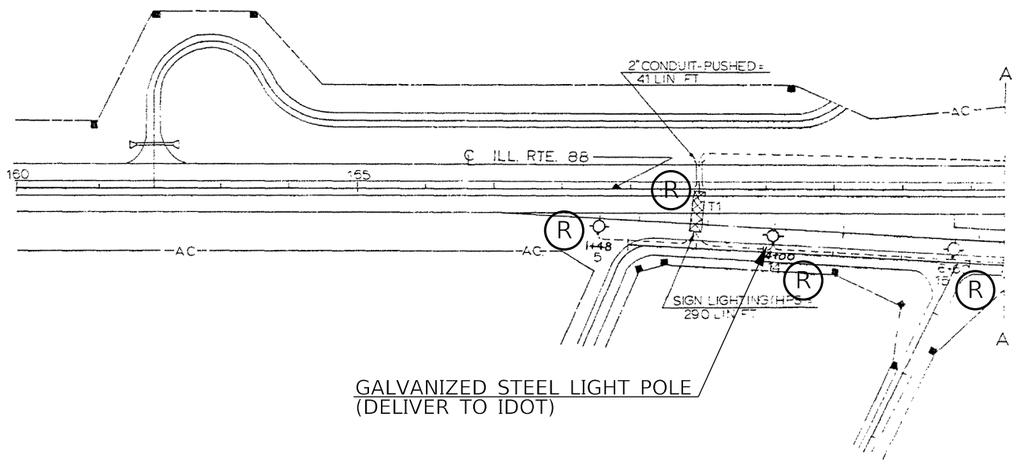

45' MH W/TH 250 W HPS

HIGHWAY LIGHTING SHEET 23 OF 33
NOT TO SCALE

USER NAME = $USER$	DESIGNED -	REVISED -	**STATE OF ILLINOIS**	**LIGHTING REMOVAL PLANS – CONTINUED**	F.A.P. RTE.	SECTION	COUNTY	TOTAL SHEETS	SHEET NO.
	DRAWN -	REVISED -	**DEPARTMENT OF TRANSPORTATION**	**IL 6 & IL 40 (KNOXVILLE AVE.) INTERCHANGE – PEORIA COUNTY**	318	72[(7,7-1,6-1)RS-2; (7-2,3)RS]	PEORIA	180	150
PLOT SCALE = 1:301.946	CHECKED -	REVISED -					CONTRACT NO. 68C98		
PLOT DATE = 12/16/2019	DATE -	REVISED -		SCALE: SHEET OF SHEETS STA. TO STA.			ILLINOIS	FED. AID PROJECT	

72[(7,7-1,6-1)RS-2(7-2,3)RS]

MODEL: Default
FILE NAME: pw:\\planroom.dot.illinois.gov:PWIDOT1Documents\IDOT Offices\District 4\Projects\D4_68C98\CADD\stat\CADD\sheets\IL 6 Lighting (FINAL 12-12-19).dgn

DESCRIPTION	UNIT	QTY.
ELECTRIC SERVICE INSTALLATION	EACH	1.0
UNDERGROUND CONDUIT, PVC, 2" DIA.	FOOT	735.0
UNDERGROUND CONDUIT, PVC, 3" DIA.	FOOT	285.0
HANDHOLE, PORTLAND CEMENT CONCRETE	EACH	3.0
UNIT DUCT, 600V, 4-1C NO.8, 1/C NO.8 GROUND, (XLP-TYPE USE), 1 1/4" DIA. POLYETHYLENE	FOOT	1770.5
UNIT DUCT, 600V, 2-1C NO.8, 1/C NO.8 GROUND, (XLP-TYPE USE), 1 1/4" DIA. POLYETHYLENE	FOOT	6344.5
ELECTRIC CABLE IN CONDUIT, 600V (XLP-TYPE USE) 1/C NO. 8	FOOT	1533.0
LUMINAIRE, LED, ROADWAY, OUTPUT DESIGNATION H	EACH	23.0
LUMINAIRE, LED, SIGN LIGHTING, OUTPUT DESIGNATION D	EACH	4.0
LUMINAIRE, LED, SIGN LIGHTING, OUTPUT DESIGNATION E	EACH	2.0
LIGHTING CONTROLLER, PEDESTAL MOUNTED, 480VOLT, 60AMP	EACH	1.0
LIGHT POLE, GALVANIZED STEEL, 45 FT. M.H., TENON MOUNT	EACH	19.0
LUMINAIRE MOUNTING BRACKET, SPECIAL	EACH	21.0
LIGHT POLE FOUNDATION, METAL, 15" BOLT CIRCLE, 8 5/8" X 8'	EACH	21.0
BREAKAWAY DEVICE, COUPLING WITH STAINLESS STEEL SCREEN	EACH	84.0
DRILL EXISTING HANDHOLE	EACH	6.0

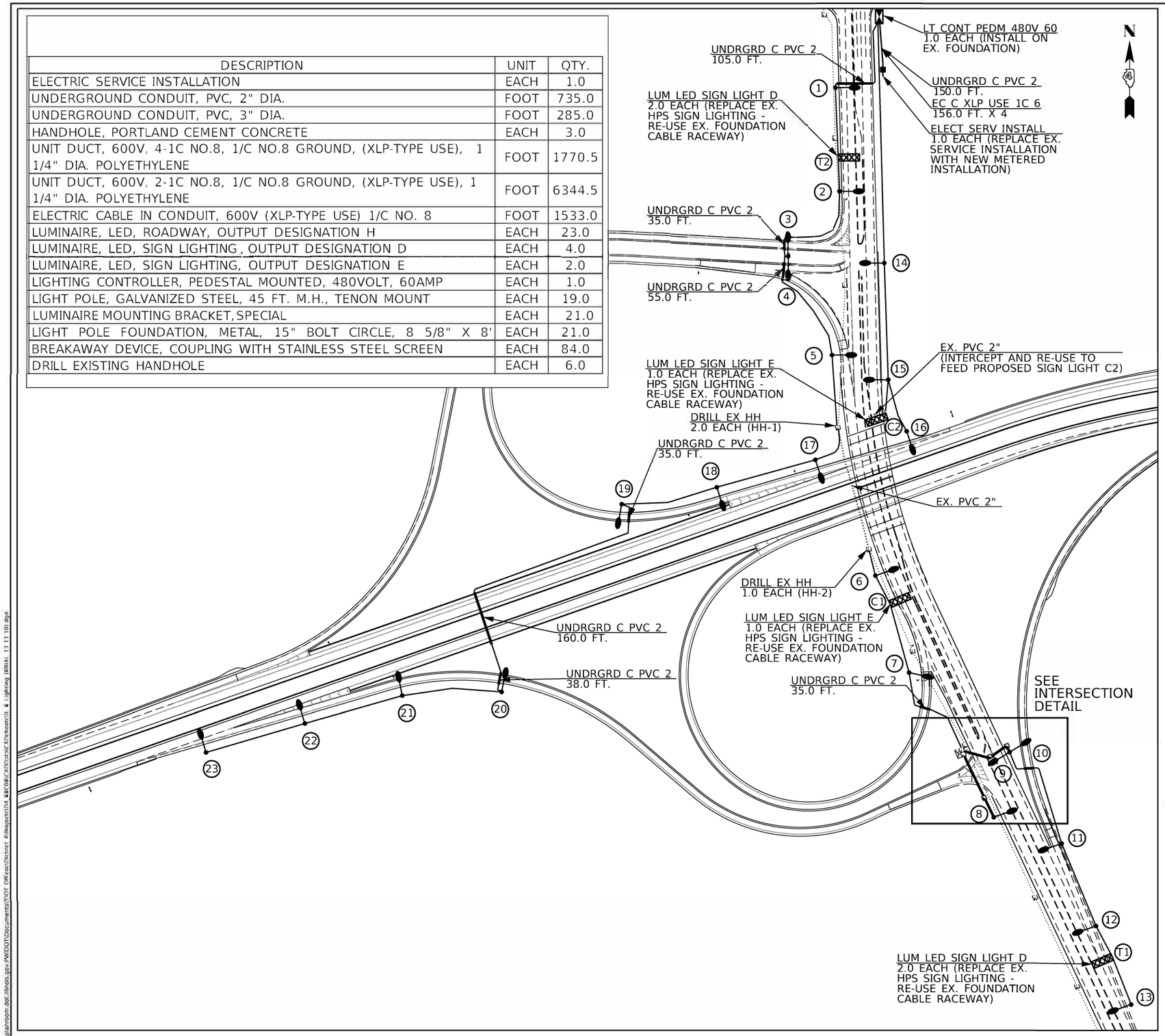

NOTES:
1. THE CONTRACTOR SHALL FIELD VERIFY LIGHTING SYSTEM VOLTAGE, LUMINAIRE TYPE, AND FIELD CONDITIONS PRIOR TO CONSTRUCTION.
2. THE CONTRACTOR SHALL REMOVE THE DUCT FROM THE PROPOSED UNIT-DUCT AND INSTALL THE CABLING ONLY FROM HH-1 TO HH-2 IN THE EXISTING 2" CONDUIT UNDER IL 6.
3. THE CONTRACTOR SHALL INTERCEPT AND USE THE EXISTING 2" CONDUIT TO CROSS IL 40 NB TO FEED THE SIGN LIGHT C2. THE CONTRACTOR SHALL REMOVE THE DUCT FROM THE PROPOSED UNIT-DUCT AND FEED THE CABLING ONLY IN THE EXISTING CONDUIT TO THE SIGN STRUCTURE.
4. THE CONTRACTOR SHALL INSTALL PROPOSED LIGHT POLES WITHIN 5 FT. OF THE LOCATION OF THE EXISTING LIGHT POLES.
5. ALL HANDHOLES SHALL INCLUDE 3" STUBS FOR FUTURE CONDUIT CONNECTIONS. THIS WORK SHALL BE INCLUDED IN THE BID PRICE OF THE PCC HANDHOLE.
6. THE CONTRACTOR SHALL GROUND AND BOND ALL PROPOSED AND EXISTING HANDHOLES IN ACCORDANCE WITH NEC REQUIREMENTS. THIS WORK SHALL NOT BE PAID FOR SEPARATELY, BUT SHALL BE INCLUDED IN THE BID PRICE FOR THE UNIT-DUCT.

INTERSECTION DETAIL

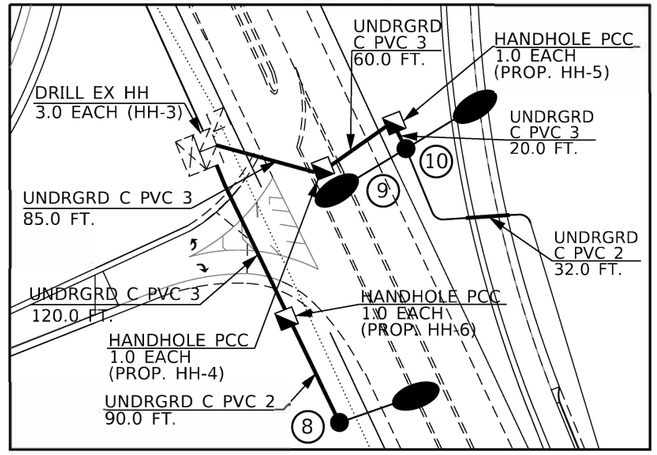

LEGEND

- PROP. LED LUMINAIRE ROADWAY, OUTPUT DESIGNATION H AND PROP. GALVANIZED STEEL LIGHT POLE 45 FT. M.H.
- PROP. LED LUMINAIRE SIGN LIGHTING, OUTPUT DESIGNATION E (REPLACE EXISTING SIGN LIGHTING)
- LIGHT POLE/ LUMINAIRE NUMBER
- PROPOSED LIGHTING CONTROLLER 60A 480V
- PROPOSED ELECTRICAL SERVICE (METERED)
- PROPOSED HANDHOLE, PCC
- PROPOSED PVC CONDUIT (SIZE VARIES)
- PROPOSED UNIT-DUCT
- EXISTING HANDHOLE
- EXISTING DOUBLE HANDHOLE
- EXISTING TRAFFIC SIGNAL CONTROLLER AND CABINET
- EXISTING CONDUIT
- EXISTING IDOT FIBER

HIGHWAY LIGHTING
SHEET 24 OF 33

NOT TO SCALE

USER NAME = $USER$	DESIGNED -	REVISED -
	DRAWN -	REVISED -
PLOT SCALE = 1:301.946	CHECKED -	REVISED -
PLOT DATE = 12/16/2019	DATE -	REVISED -

STATE OF ILLINOIS
DEPARTMENT OF TRANSPORTATION

PROPOSED LIGHTING PLANS
IL 6 & IL 40 (KNOXVILLE AVE.) INTERCHANGE – PEORIA COUNTY

SCALE: | SHEET OF SHEETS | STA. | TO STA.

F.A.P. RTE.	SECTION	COUNTY	TOTAL SHEETS	SHEET NO.
318	72[(7,7-1,6-1)RS-2; (7-2,3)RS]	PEORIA	180	151
		CONTRACT NO. 68C98		
	ILLINOIS	FED. AID PROJECT		

72[(7,7-1,6-1)RS-2(7-2,3)RS]

REV. 2/11/20

MODEL: Default
FILE NAME: pw:\\planroom.dot.illinois.gov:PWIDOT\Documents\IDOT Office\Chetriret #\Projects\Dist #\FC08\CAD\Sheets\C Lighting (ERIAL 13 13 10).dgn

LEGEND

PROP. LED LUMINAIRE ROADWAY, OUTPUT DESIGNATION H

PROP. LED LUMINAIRE SIGN LIGHTING

PROP. UNIT-DUCT 2/C NO. 8 1/C NO. 8 GROUND

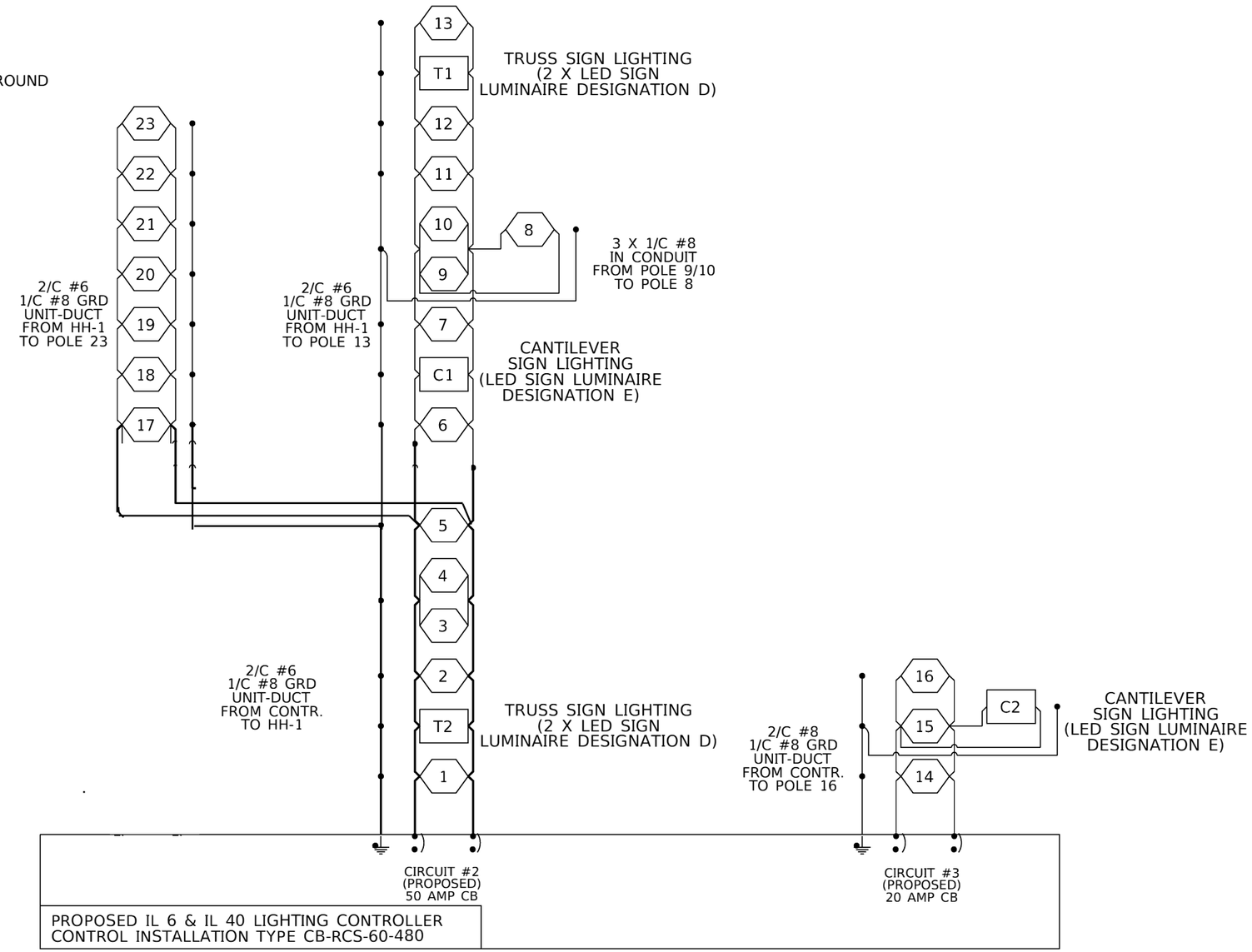

PROPOSED IL 6 & IL 40 LIGHTING CONTROLLER CONTROL INSTALLATION TYPE CB-RCS-60-480

NOTES:
1. THE CONTRACTOR SHALL FIELD VERIFY LIGHTING SYSTEM VOLTAGE, LUMINAIRE TYPE, AND FIELD CONDITIONS PRIOR TO CONSTRUCTION.
2. THE CONTRACTOR SHALL BREAK OUT TWO CONDUCTORS OF THE FOUR CONDUCTOR UNIT-DUCT IN LIGHT POLE 17 FOR CIRCUIT #1 AND INSTALL THE OTHER TWO CONDUCTORS THROUGH THE EXISTING HANDHOLE HH-1 AND CONDUITS TO LIGHT POLE 6.

HIGHWAY LIGHTING
SHEET 25 OF 33

NOT TO SCALE

MODEL: Default
FILE NAME: pw:\\planroom.dot.illinois.gov:PWIDOT\Documents\IDOT Offices\District 4\Projects\D4 68C98\CADData\CADSheets\IL 6 Lighting (FINAL 12-12-19).dgn

USER NAME = $USER$	DESIGNED -	REVISED -
	DRAWN -	REVISED -
PLOT SCALE = 1:301.946	CHECKED -	REVISED -
PLOT DATE = 12/16/2019	DATE -	REVISED -

STATE OF ILLINOIS
DEPARTMENT OF TRANSPORTATION

PROPOSED CIRCUIT DIAGRAM
IL 6 & IL 40 (KNOXVILLE AVE.) INTERCHANGE – PEORIA COUNTY

SCALE: | SHEET OF SHEETS | STA. | TO STA.

F.A.P. RTE.	SECTION	COUNTY	TOTAL SHEETS	SHEET NO.
318	72[(7,7-1,6-1)RS-2; (7-2,3)RS]	PEORIA	180	152
		CONTRACT NO. 68C98		
		ILLINOIS	FED. AID PROJECT	

72[(7,7-1,6-1)RS-2(7-2,3)RS]

REV. 2/11/20

IL 6 & IL 40 (KNOXVILLE AVE.) INTERCHANGE LIGHT POLE SCHEDULE									
POLE NO.	EX. POLE TYPE	MOUNTING HEIGHT (FT.)	EX. LUMINAIRE	EX. LUMINAIRE QTY.	PROP. POLE TYPE	MOUNTING HEIGHT (FT.)	PROP. LUMINAIRE	PROP. LUMINAIRE QTY.	NOTES
1	ALUMINUM, TENON TOP	45.0	HPS, 250W, VERTICAL MOUNT	1.0	GALVANIZED STEEL, TENON TOP	45.0	LUMINAIRE, LED, ROADWAY, OUTPUT DESIGNATION H	1.0	FURNISH AND INSTALL NEW SURGE ARRESTOR, FUSEHOLDER, FUSES, AND LUMINAIRE WIRING
2	ALUMINUM, TENON TOP	45.0	HPS, 250W, VERTICAL MOUNT	1.0	GALVANIZED STEEL, TENON TOP	45.0	LUMINAIRE, LED, ROADWAY, OUTPUT DESIGNATION H	1.0	FURNISH AND INSTALL NEW SURGE ARRESTOR, FUSEHOLDER, FUSES, AND LUMINAIRE WIRING
3/4	ALUMINUM, TENON TOP-TWIN	45.0	HPS, 250W, VERTICAL MOUNT	2.0	GALVANIZED STEEL, TENON TOP-TWIN	45.0	LUMINAIRE, LED, ROADWAY, OUTPUT DESIGNATION H	2.0	FURNISH AND INSTALL NEW SURGE ARRESTOR, FUSEHOLDER, FUSES, AND LUMINAIRE WIRING
5	ALUMINUM, TENON TOP	45.0	HPS, 250W, VERTICAL MOUNT	1.0	GALVANIZED STEEL, TENON TOP	45.0	LUMINAIRE, LED, ROADWAY, OUTPUT DESIGNATION H	1.0	FURNISH AND INSTALL NEW SURGE ARRESTOR, FUSEHOLDER, FUSES, AND LUMINAIRE WIRING
6	ALUMINUM, TENON TOP	45.0	HPS, 250W, VERTICAL MOUNT	1.0	GALVANIZED STEEL, TENON TOP	45.0	LUMINAIRE, LED, ROADWAY, OUTPUT DESIGNATION H	1.0	FURNISH AND INSTALL NEW SURGE ARRESTOR, FUSEHOLDER, FUSES, AND LUMINAIRE WIRING
7	ALUMINUM, TENON TOP	45.0	HPS, 250W, VERTICAL MOUNT	1.0	GALVANIZED STEEL, TENON TOP	45.0	LUMINAIRE, LED, ROADWAY, OUTPUT DESIGNATION H	1.0	FURNISH AND INSTALL NEW SURGE ARRESTOR, FUSEHOLDER, FUSES, AND LUMINAIRE WIRING
8	ALUMINUM, TENON TOP	45.0	HPS, 250W, VERTICAL MOUNT	1.0	GALVANIZED STEEL, TENON TOP	45.0	LUMINAIRE, LED, ROADWAY, OUTPUT DESIGNATION H	1.0	FURNISH AND INSTALL NEW SURGE ARRESTOR, FUSEHOLDER, FUSES, AND LUMINAIRE WIRING
9/10	ALUMINUM, TENON TOP-TWIN	45.0	HPS, 250W, VERTICAL MOUNT	2.0	GALVANIZED STEEL, TENON TOP-TWIN	45.0	LUMINAIRE, LED, ROADWAY, OUTPUT DESIGNATION H	2.0	FURNISH AND INSTALL NEW SURGE ARRESTOR, FUSEHOLDER, FUSES, AND LUMINAIRE WIRING
11	ALUMINUM, TENON TOP	45.0	HPS, 250W, VERTICAL MOUNT	1.0	GALVANIZED STEEL, TENON TOP	45.0	LUMINAIRE, LED, ROADWAY, OUTPUT DESIGNATION H	1.0	FURNISH AND INSTALL NEW SURGE ARRESTOR, FUSEHOLDER, FUSES, AND LUMINAIRE WIRING
12	ALUMINUM, TENON TOP	45.0	HPS, 250W, VERTICAL MOUNT	1.0	GALVANIZED STEEL, TENON TOP	45.0	LUMINAIRE, LED, ROADWAY, OUTPUT DESIGNATION H	1.0	FURNISH AND INSTALL NEW SURGE ARRESTOR, FUSEHOLDER, FUSES, AND LUMINAIRE WIRING
13	ALUMINUM, TENON TOP	45.0	HPS, 250W, VERTICAL MOUNT	1.0	GALVANIZED STEEL, TENON TOP	45.0	LUMINAIRE, LED, ROADWAY, OUTPUT DESIGNATION H	1.0	FURNISH AND INSTALL NEW SURGE ARRESTOR, FUSEHOLDER, FUSES, AND LUMINAIRE WIRING
14	ALUMINUM, TENON TOP	45.0	HPS, 250W, VERTICAL MOUNT	1.0	GALVANIZED STEEL, TENON TOP	45.0	LUMINAIRE, LED, ROADWAY, OUTPUT DESIGNATION H	1.0	FURNISH AND INSTALL NEW SURGE ARRESTOR, FUSEHOLDER, FUSES, AND LUMINAIRE WIRING
15	ALUMINUM, TENON TOP	45.0	HPS, 250W, VERTICAL MOUNT	1.0	GALVANIZED STEEL, TENON TOP	45.0	LUMINAIRE, LED, ROADWAY, OUTPUT DESIGNATION H	1.0	FURNISH AND INSTALL NEW SURGE ARRESTOR, FUSEHOLDER, FUSES, AND LUMINAIRE WIRING
16	ALUMINUM, TENON TOP	45.0	HPS, 250W, VERTICAL MOUNT	1.0	GALVANIZED STEEL, TENON TOP	45.0	LUMINAIRE, LED, ROADWAY, OUTPUT DESIGNATION H	1.0	FURNISH AND INSTALL NEW SURGE ARRESTOR, FUSEHOLDER, FUSES, AND LUMINAIRE WIRING
17	ALUMINUM, TENON TOP	45.0	HPS, 250W, VERTICAL MOUNT	1.0	GALVANIZED STEEL, TENON TOP	45.0	LUMINAIRE, LED, ROADWAY, OUTPUT DESIGNATION H	1.0	FURNISH AND INSTALL NEW SURGE ARRESTOR, FUSEHOLDER, FUSES, AND LUMINAIRE WIRING
18	ALUMINUM, TENON TOP	45.0	HPS, 250W, VERTICAL MOUNT	1.0	GALVANIZED STEEL, TENON TOP	45.0	LUMINAIRE, LED, ROADWAY, OUTPUT DESIGNATION H	1.0	FURNISH AND INSTALL NEW SURGE ARRESTOR, FUSEHOLDER, FUSES, AND LUMINAIRE WIRING
19	ALUMINUM, TENON TOP	45.0	HPS, 250W, VERTICAL MOUNT	1.0	GALVANIZED STEEL, TENON TOP	45.0	LUMINAIRE, LED, ROADWAY, OUTPUT DESIGNATION H	1.0	FURNISH AND INSTALL NEW SURGE ARRESTOR, FUSEHOLDER, FUSES, AND LUMINAIRE WIRING
20	ALUMINUM, TENON TOP	45.0	HPS, 250W, VERTICAL MOUNT	1.0	GALVANIZED STEEL, TENON TOP	45.0	LUMINAIRE, LED, ROADWAY, OUTPUT DESIGNATION H	1.0	FURNISH AND INSTALL NEW SURGE ARRESTOR, FUSEHOLDER, FUSES, AND LUMINAIRE WIRING
21	ALUMINUM, TENON TOP	45.0	HPS, 250W, VERTICAL MOUNT	1.0	GALVANIZED STEEL, TENON TOP	45.0	LUMINAIRE, LED, ROADWAY, OUTPUT DESIGNATION H	1.0	FURNISH AND INSTALL NEW SURGE ARRESTOR, FUSEHOLDER, FUSES, AND LUMINAIRE WIRING
22	ALUMINUM, TENON TOP	45.0	HPS, 250W, VERTICAL MOUNT	1.0	GALVANIZED STEEL, TENON TOP	45.0	LUMINAIRE, LED, ROADWAY, OUTPUT DESIGNATION H	1.0	FURNISH AND INSTALL NEW SURGE ARRESTOR, FUSEHOLDER, FUSES, AND LUMINAIRE WIRING
23	ALUMINUM, TENON TOP	45.0	HPS, 250W, VERTICAL MOUNT	1.0	GALVANIZED STEEL, TENON TOP	45.0	LUMINAIRE, LED, ROADWAY, OUTPUT DESIGNATION H	1.0	FURNISH AND INSTALL NEW SURGE ARRESTOR, FUSEHOLDER, FUSES, AND LUMINAIRE WIRING
T1	TRUSS SIGN LIGHTING		HPS, SIGN LIGHTING	2.0	TRUSS SIGN LIGHTING		LUMINAIRE, LED, SIGN LIGHTING, OUTPUT DESIGNATION D	2.0	FURNISH AND INSTALL NEW SURGE ARRESTOR, FUSEHOLDER, FUSES, AND LUMINAIRE WIRING
T2	TRUSS SIGN LIGHTING		HPS, SIGN LIGHTING	2.0	TRUSS SIGN LIGHTING		LUMINAIRE, LED, SIGN LIGHTING, OUTPUT DESIGNATION D	2.0	FURNISH AND INSTALL NEW SURGE ARRESTOR, FUSEHOLDER, FUSES, AND LUMINAIRE WIRING
C1	CANTILEVER SIGN LIGHTING		HPS, SIGN LIGHTING	1.0	CANTILEVER SIGN LIGHTING		LUMINAIRE, LED, SIGN LIGHTING, OUTPUT DESIGNATION E	1.0	FURNISH AND INSTALL NEW SURGE ARRESTOR, FUSEHOLDER, FUSES, AND LUMINAIRE WIRING
C2	CANTILEVER SIGN LIGHTING		HPS, SIGN LIGHTING	1.0	CANTILEVER SIGN LIGHTING		LUMINAIRE, LED, SIGN LIGHTING, OUTPUT DESIGNATION E	1.0	FURNISH AND INSTALL NEW SURGE ARRESTOR, FUSEHOLDER, FUSES, AND LUMINAIRE WIRING

NOT TO SCALE

MODEL: Default
FILE NAME: pw:\\pbnroom.dot.illinois.gov:PWIDOT\Documents\IDOT Offices\District 4\Projects\D4 68C98\CADData\CADSheets\IL 6 Lighting (FINAL 12-12-19).dgn

USER NAME = $USER$	DESIGNED -	REVISED -	
	DRAWN -	REVISED -	
PLOT SCALE = 1:301.946	CHECKED -	REVISED -	
PLOT DATE = 12/16/2019	DATE -	REVISED -	

STATE OF ILLINOIS
DEPARTMENT OF TRANSPORTATION

PROPOSED LIGHT POLE SCHEDULE
IL 6 & IL 40 (KNOXVILLE AVE.) INTERCHANGE – PEORIA COUNTY

SCALE: | SHEET OF SHEETS | STA. | TO STA.

F.A.P. RTE.	SECTION	COUNTY	TOTAL SHEETS	SHEET NO.
318	72[(7,7-1,6-1)RS-2; (7-2,3)RS]	PEORIA	180	153
		CONTRACT NO. 68C98		
	ILLINOIS	FED. AID PROJECT		

72[(7,7-1,6-1)RS-2(7-2,3)RS]

Illinois Department of Transportation

Luminaire Performance Table

Project

Date	Contract Number	Section Number	County
12/08/19	68C98		Peoria

Marked Route Number	Municipality
IL-6	

Roadway

Lane Width	# of Lanes	Median Width	I.E.S. Surface Classification	Q-Zero Value
12	2	N/A	R3	0.7

Structure

Mounting Height	Arm Length	Set-Back	Number of Luminaires (Highmast & Sign Lighting Only)
50 FT	15 FT	20 FT	

Luminaire

Description	I.E.S. Lateral Distribution	I.E.S. Vertical Distribution
Luminaire LED Output Designation H	Type II	Medium

Total Light Loss Factor (LLF)	B-U-G Rating	Shields	Dimming Protocol
.684	B3-U0-G3	N/A	10V

Layout

Spacing (to Nearest 5 ft)	Configuration (Opposite, Staggered, 1 Sided, or Median)
265 FT	1 sided

Performance

Average Illuminance, E_{AVE} (fc)	Uniformity Ratio, E_{AVE}/E_{MIN}
0.9	3.0

Average Luminance, L_{AVE} (cd/m^2)	Uniformity Ratio, L_{AVE}/L_{MIN}	Uniformity Ratio, L_{MAX}/L_{MIN}	Veiling Luminance Ratio, L_V/L_{AVE}

Light Tresspass

Distance to ROW (behind pole)	Max. Horizontal Illuminance at ROW, E_H	Max. Vertical Illuminance at ROW, E_V

Notes

1. Set-Back is from Edge of Pavement (white line) except for sign luminaires when it is vertical and horizontal distance from the sign to the luminaire.
2. Lighting calculations shall be performed with all luminaires oriented toward and perpendicular to the roadway.
3. Total Light Loss Factor (LLF) = the product of "Lumen Maintenance" (LLD) = 0.9, "Dirt Depreciation" (LDD) = 0.8, and "Equipment Factors" (EF) = 0.95.
4. Performance requirements shall be the minimum acceptable standards of photometric performance for the luminaire, based on the given conditions listed above.

Printed 12/10/19

BDE 5630 (04/10/19)

MODEL: Default
FILE NAME: pw:\\planroom.dot.illinois.gov:PWIDOT\Documents\IDOT Offices\District 4\Projects\D4 68C98\CADData\CADSheets\IL 6 Lighting (FINAL 12-12-19).dgn

USER NAME = $USER$	DESIGNED -	REVISED -	
	DRAWN -	REVISED -	
PLOT SCALE = 1:301.946	CHECKED -	REVISED -	
PLOT DATE = 12/16/2019	DATE -	REVISED -	

STATE OF ILLINOIS
DEPARTMENT OF TRANSPORTATION

PROPOSED LED LUMINAIRE PERFORMANCE TABLES
IL 6 & IL 40 (KNOXVILLE AVE.) INTERCHANGE – PEORIA COUNTY

SCALE: | SHEET OF SHEETS | STA. | TO STA.

F.A.P. RTE.	SECTION	COUNTY	TOTAL SHEETS	SHEET NO.
318	72{(7,7-1,6-1)RS-2; (7-2,3)RS}	PEORIA	180	154
		CONTRACT NO. 68C98		
		ILLINOIS	FED. AID PROJECT	

REV. 2/11/20

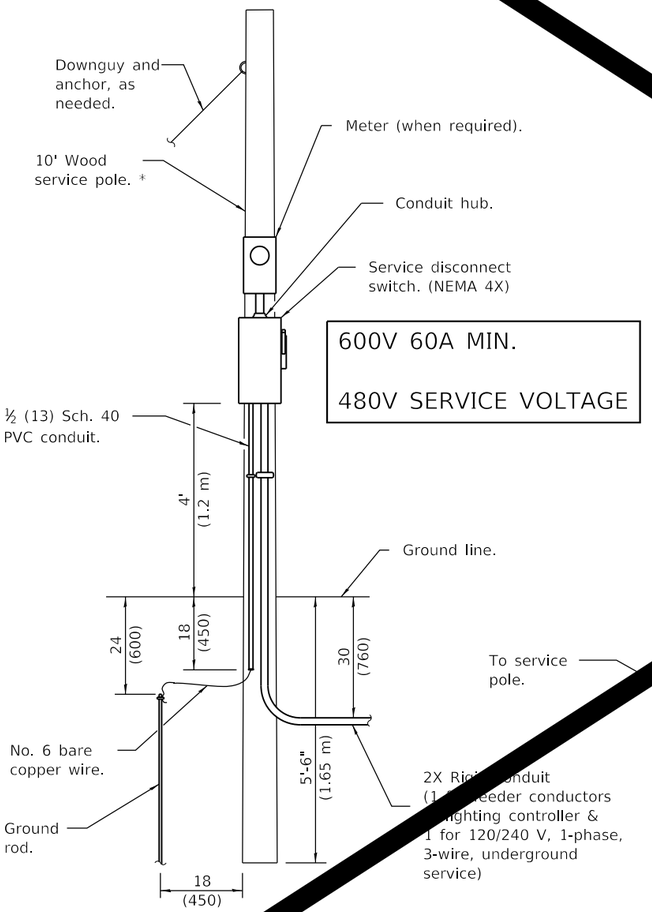

ELECTRIC SERVICE INSTALLATION

(Cut off for underground service and treat surface with preservative. Consult utility company standards for exact requirements.)
* Size larger as needed.

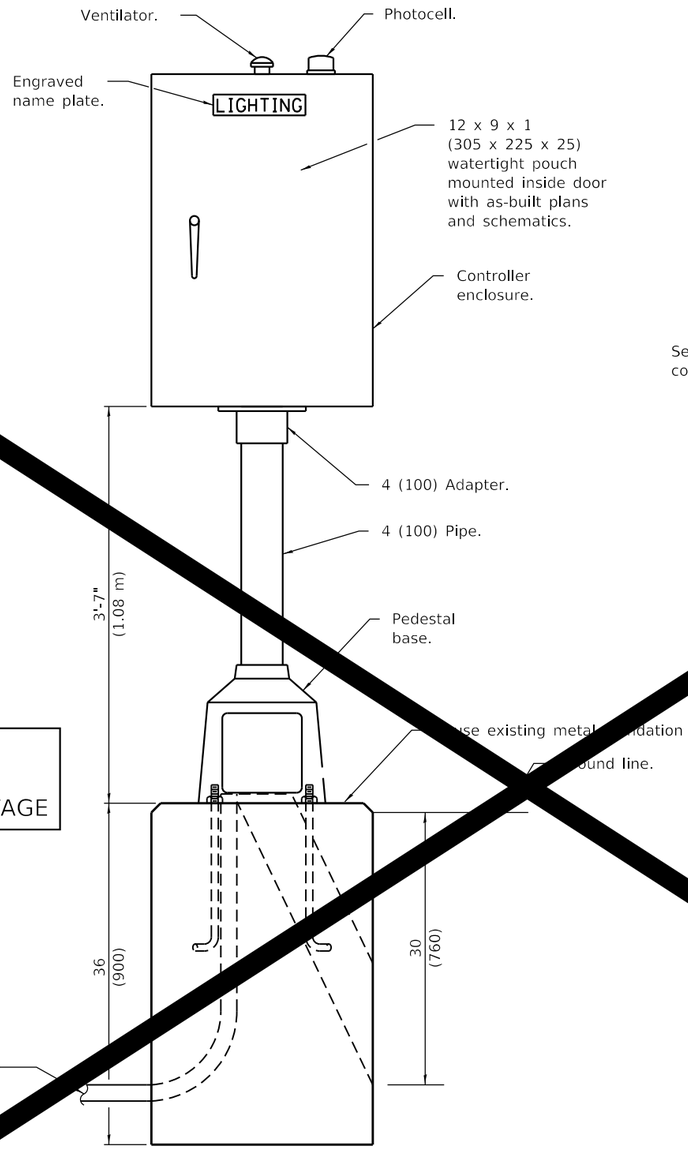

LIGHTING CONTROLLER

SHEET DELETED

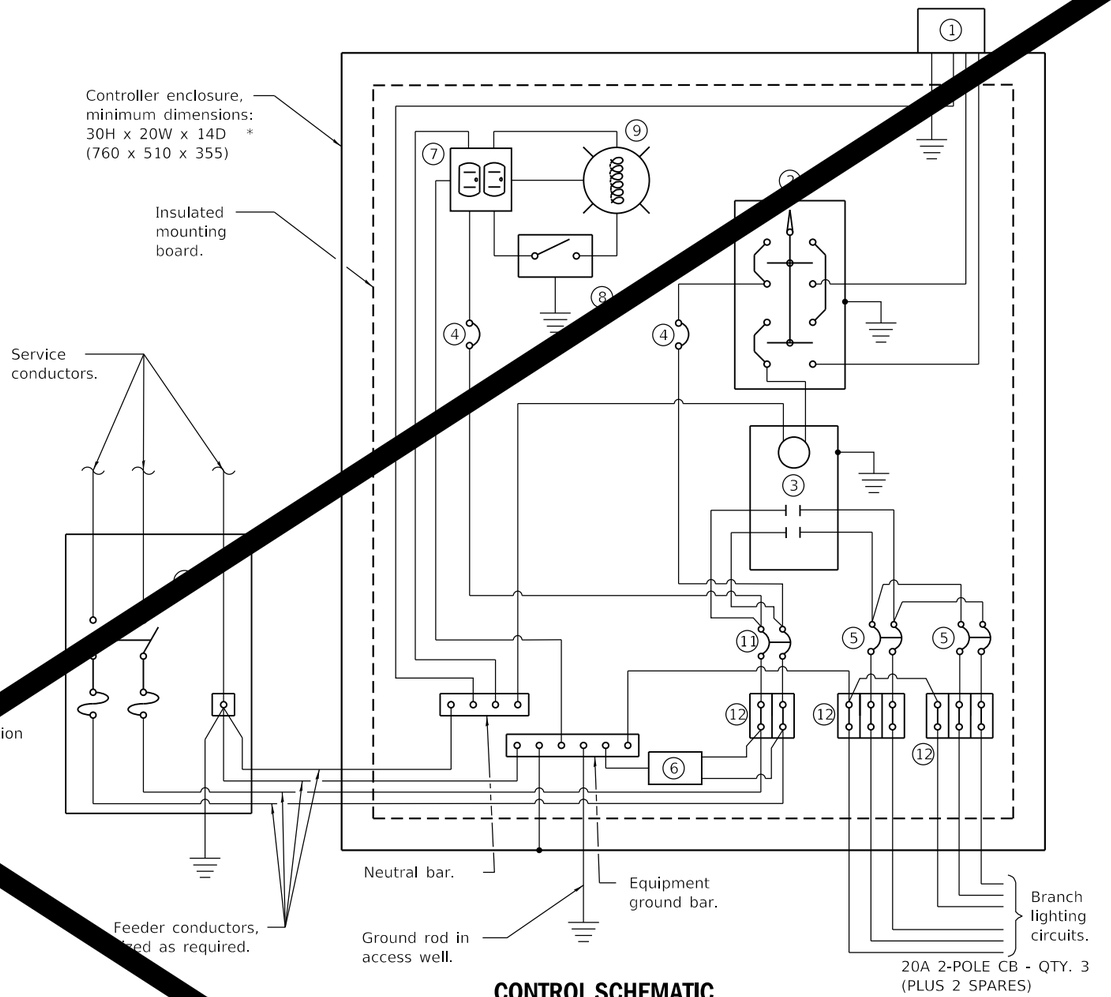

CONTROL SCHEMATIC

1. Photocell with integral surge rester.
2. HAND AUTO selector switch.
3. 60 amp*, ele lly held contactor.
4. 15 amp, 1-pole circu aker.
5. 20 amp*, 2-pole circuit brea (QTY 3.0 PLUS 2 SPARES).
6. Surge arrester.
7. GFCI duplex receptacle.
8. Single-pole, single-throw switch.
9. LED light bulb, enclosed and gasketted with 800 lumen lamp.
10. Service disconnect switch - 2-pole, 3-wire, 60 amp*, fused at 60 amp*, solid neutral in NEMA 4X enclosure having lockable external handle.
11. 60 amp*, 2-pole circuit breaker.
12. Terminal block sized for conductors as shown on plans.

ize larger as needed.

All dimensions in inches (millimeters) unless otherwise sh

480V SERVICE VOLTAGE

HIGHWAY LIGHTING
HEET 28 OF 33
T TO SCALE

MODEL: Default
FILE NAME: c:\dahroom.dot.illinois.gov\PWIDOT\Documents\IDOT Offices\District 4\Projects\D4 #8C98\CADData\CADdata\sheets\IL 6 Lighting (FINAL 12-12-19).dgn

USER NAME = $USER$	DESIGNED -	REVISED -	
	DRAWN -	REVISED -	
PLOT SCALE = 1:301.946	CHECKED -	REVISED -	
PLOT DATE = 12/16/2019	DATE -	REVISED -	

STATE OF ILLINOIS
DEPARTMENT OF TRANSPORTATION

PROPOSED LIGHTING CONTROLLER DETAIL
IL 6 & IL 40 (KNOXVILLE AVE.) INTERCHANGE – PEORIA COUNTY

SCALE: | SHEET OF SHEETS | STA. | TO STA.

F.A.P. RTE.	SECTION	CO	TOTAL SHEETS	SHEET NO.
318	72[(7,7-1,6-1)RS-2; (7-2,3)RS]	PEORIA		155
		CONTRACT NO. 98		
	ILLINOIS	FED. AID PROJECT		

REV. 2/11/20

DESCRIPTION	UNIT	QTY.
AERIAL CABLE, 2-1/C NO. 6 WITH MESSENGER WIRE	FOOT	233.0
LUMINAIRE, LED, ROADWAY, OUTPUT DESIGNATION G	EACH	14.0
LUMINAIRE, LED, ROADWAY, OUTPUT DESIGNATION H	EACH	8.0
LUMINAIRE, LED, SIGN LIGHTING, OUTPUT DESIGNATION E	EACH	2.0
LIGHTING CONTROLLER, PEDESTAL MOUNTED, 480VOLT, 60AMP	EACH	1.0
LIGHT POLE, GALVANIZED STEEL, 45 FT. M.H., TENON MOUNT	EACH	6.0
REMOVAL OF LIGHTING UNIT, NO SALVAGE	EACH	6.0
TEMPORARY TRAFFIC SIGNAL, WOOD POLE	EACH	1.0
REMOVE LUMINAIRE, COMPLETE	EACH	13.0
BREAKAWAY DEVICE, COUPLINGS WITH S.S. SCREEN	EACH	24.0
LUMINAIRE MOUNTING BRACKET, SPECIAL	EACH	6.0

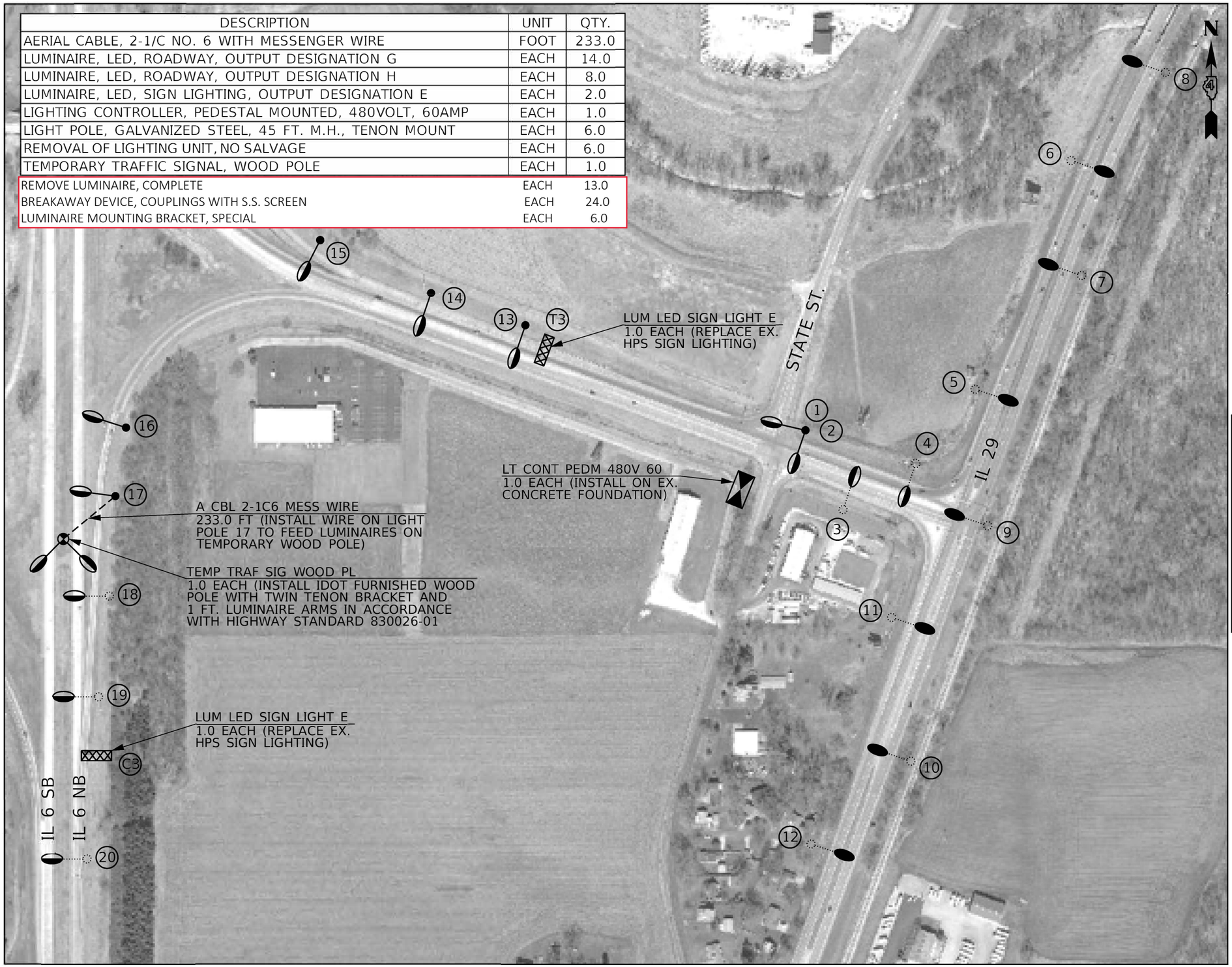

NOTES:
1. TEMPORARY LIGHTING SHALL BE REMOVED UPON COMPLETION OF THE PROJECT. THE CONTRACTOR SHALL DELIVER THE LUMINAIRES, WOOD POLE AND BRACKETING TO IDOT DISTRICT 4 TRAFFIC BUILDING 1025 W. DETWEILLER DR. PEORIA, IL 61615. THIS WORK WILL NOT BE PAID FOR SEPARATELY BUT SHALL BE INCLUDED IN THE BID PRICE FOR THE TEMPORARY TRAFFIC SIGNAL WOOD POLE.
2. THE AERIAL CABLE USED FOR THE TEMPORARY LIGHTING SHALL BE REMOVED UPON COMPLETION OF THE PROJECT. THE CONTRACTOR SHALL DISPOSE OF THE CABLE OFF OF THE JOB SITE. THIS WORK WILL NOT BE PAID FOR SEPARATELY BUT SHALL BE INCLUDED IN THE BID PRICE FOR THE AERIAL CABLE.

LEGEND

- PROP. LED LUMINAIRE ROADWAY, OUTPUT DESIGNATION H (INSTALL ON EXISTING LIGHT POLE)
- PROP. LED LUMINAIRE ROADWAY, OUTPUT DESIGNATION G (INSTALL ON EXISTING LIGHT POLE)
- PROP. LED LUMINAIRE ROADWAY, OUTPUT DESIGNATION G AND GALVANIZED STEEL LIGHT POLE 45 FT. M.H. TENON MOUNT (INSTALL ON EX. FOUNDATION)
- PROP. LED LUMINAIRE ROADWAY, OUTPUT DESIGNATION G AND GALVANIZED STEEL LIGHT POLE 45 FT. M.H. TENON MOUNT-TWIN (INSTALL ON EX. FOUNDATION)
- TEMPORARY WOOD POLE WITH PROP. LED LUMINAIRE ROADWAY, OUTPUT DESIGNATION G
- PROP. LED LUMINAIRE SIGN LIGHTING, OUTPUT DESIGNATION E (REPLACE EXISTING SIGN LIGHTING)
- (#) LIGHT POLE/ LUMINAIRE NUMBER
- PROPOSED LIGHTING CONTROLLER 60A 480V
- PROPOSED AERIAL CABLE (TEMPORARY)

HIGHWAY LIGHTING
SHEET 29 OF 33

NOT TO SCALE

MODEL: Default
FILE NAME: pw:\\planroom.dot.illinois.gov:PWIDOT\Documents\IDOT Offices\District 4\Projects\04 68C98\CADData\CADSheets\IL 6 Lighting (FINAL 12-12-19).dgn

USER NAME = $USER$	DESIGNED -	REVISED -
	DRAWN -	REVISED -
PLOT SCALE = 1:301.946	CHECKED -	REVISED -
PLOT DATE = 12/16/2019	DATE -	REVISED -

STATE OF ILLINOIS
DEPARTMENT OF TRANSPORTATION

PROPOSED LIGHTING PLANS
IL 6 & IL 29 INTERCHANGE – PEORIA COUNTY

SCALE: | SHEET OF SHEETS | STA. | TO STA.

F.A.P. RTE.	SECTION	COUNTY	TOTAL SHEETS	SHEET NO.
318	72[(7,7-1,6-1)RS-2; (7-2,3)RS]	PEORIA	180	156
		CONTRACT NO. 68C98		
	ILLINOIS	FED. AID PROJECT		

72[(7,7-1,6-1)RS-2(7-2,3)RS]

REV. 2/11/20

LEGEND

- PROP. LED LUMINAIRE ROADWAY, OUTPUT DESIGNATION H
- PROP. LED LUMINAIRE ROADWAY, OUTPUT DESIGNATION G
- PROP. LED LUMINAIRE SIGN LIGHTING
- PROP. LED LUMINAIRE ROADWAY, OUTPUT DESIGNATION G (TEMPORARY)
- EX. ELECTRIC CABLE IN CONDUIT
- PROP. AERIAL CABLE, 2-1/C NO. 6 WITH MESSENGER WIRE (TEMPORARY)

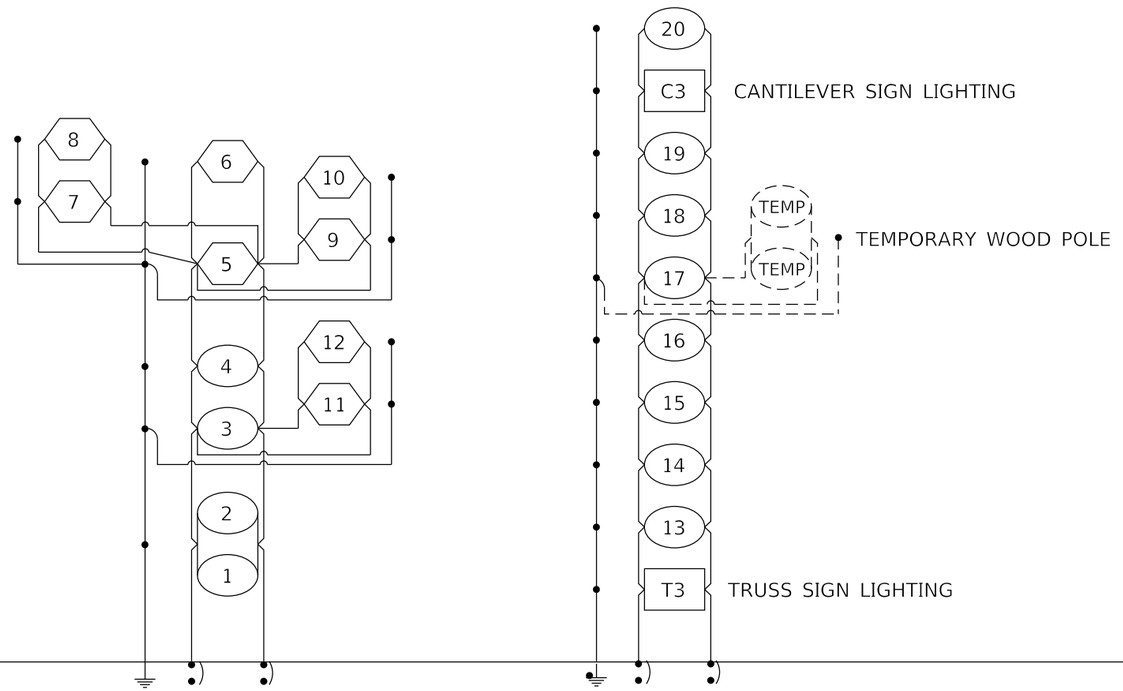

PROPOSED IL 6 & IL 29 LIGHTING CONTROLLER CONTROL INSTALLATION TYPE CB-RCS-60-480

NOTES:
1. THE CONTRACTOR SHALL FIELD VERIFY LIGHTING SYSTEM VOLTAGE, LUMINAIRE TYPE, AND FIELD CONDITIONS PRIOR TO CONSTRUCTION.

HIGHWAY LIGHTING
SHEET 30 OF 33

NOT TO SCALE

MODEL: Default
FILE NAME: pw:\\planroom.dot.illinois.gov:PWIDOT\Documents\IDOT Offices\District 4\Projects\D4 68C98\CADD\stat\CADD\sheets\IL 6 Lighting (FINAL 12-12-19).dgn

USER NAME = $USER$	DESIGNED -	REVISED -	
	DRAWN -	REVISED -	
PLOT SCALE = 1:301.946	CHECKED -	REVISED -	
PLOT DATE = 12/16/2019	DATE -	REVISED -	

STATE OF ILLINOIS
DEPARTMENT OF TRANSPORTATION

PROPOSED CIRCUIT DIAGRAM
IL 6 & IL 29 INTERCHANGE – PEORIA COUNTY

SCALE: | SHEET OF SHEETS | STA. | TO STA.

F.A.P. RTE.	SECTION	COUNTY	TOTAL SHEETS	SHEET NO.
318	72[(7,7-1,6-1)RS-2; (7-2,3)RS]	PEORIA	180	157
		CONTRACT NO. 68C98		
		ILLINOIS	FED. AID PROJECT	

72[(7,7-1,6-1)RS-2(7-2,3)RS]

IL 6 & IL 29 INTERCHANGE LIGHT POLE SCHEDULE							
POLE NO.	EX. POLE TYPE	MOUNTING HEIGHT (FT.)	EX. LUMINAIRE	EX. LUMINAIRE QTY.	PROP. LUMINAIRE	PROP. LUMINAIRE QTY.	NOTES
1/2	ALUMINUM, TENON TOP-TWIN	45.0	HPS, 250W, VERTICAL MOUNT	2.0	LUMINAIRE, LED, ROADWAY, OUTPUT DESIGNATION G	2.0	FURNISH AND INSTALL NEW SURGE ARRESTOR, FUSEHOLDER, FUSES, AND LUMINAIRE WIRING
3	ALUMINUM, TENON TOP	45.0	HPS, 250W, VERTICAL MOUNT	1.0	LUMINAIRE, LED, ROADWAY, OUTPUT DESIGNATION G	1.0	FURNISH AND INSTALL NEW SURGE ARRESTOR, FUSEHOLDER, FUSES, AND LUMINAIRE WIRING
4	ALUMINUM, TENON TOP	45.0	HPS, 250W, VERTICAL MOUNT	1.0	LUMINAIRE, LED, ROADWAY, OUTPUT DESIGNATION G	1.0	FURNISH AND INSTALL NEW SURGE ARRESTOR, FUSEHOLDER, FUSES, AND LUMINAIRE WIRING
5	ALUMINUM, TENON TOP	55.0	HPS, 400W, VERTICAL MOUNT	1.0	LUMINAIRE, LED, ROADWAY, OUTPUT DESIGNATION H	1.0	FURNISH AND INSTALL NEW SURGE ARRESTOR, FUSEHOLDER, FUSES, AND LUMINAIRE WIRING
6	ALUMINUM, TENON TOP	55.0	HPS, 400W, VERTICAL MOUNT	1.0	LUMINAIRE, LED, ROADWAY, OUTPUT DESIGNATION H	1.0	FURNISH AND INSTALL NEW SURGE ARRESTOR, FUSEHOLDER, FUSES, AND LUMINAIRE WIRING
7	ALUMINUM, TENON TOP	55.0	HPS, 400W, VERTICAL MOUNT	1.0	LUMINAIRE, LED, ROADWAY, OUTPUT DESIGNATION H	1.0	FURNISH AND INSTALL NEW SURGE ARRESTOR, FUSEHOLDER, FUSES, AND LUMINAIRE WIRING
8	ALUMINUM, TENON TOP	55.0	HPS, 400W, VERTICAL MOUNT	1.0	LUMINAIRE, LED, ROADWAY, OUTPUT DESIGNATION H	1.0	FURNISH AND INSTALL NEW SURGE ARRESTOR, FUSEHOLDER, FUSES, AND LUMINAIRE WIRING
9	ALUMINUM, TENON TOP	55.0	HPS, 400W, VERTICAL MOUNT	1.0	LUMINAIRE, LED, ROADWAY, OUTPUT DESIGNATION H	1.0	FURNISH AND INSTALL NEW SURGE ARRESTOR, FUSEHOLDER, FUSES, AND LUMINAIRE WIRING
10	ALUMINUM, TENON TOP	55.0	HPS, 400W, VERTICAL MOUNT	1.0	LUMINAIRE, LED, ROADWAY, OUTPUT DESIGNATION H	1.0	FURNISH AND INSTALL NEW SURGE ARRESTOR, FUSEHOLDER, FUSES, AND LUMINAIRE WIRING
11	ALUMINUM, TENON TOP	55.0	HPS, 400W, VERTICAL MOUNT	1.0	LUMINAIRE, LED, ROADWAY, OUTPUT DESIGNATION H	1.0	FURNISH AND INSTALL NEW SURGE ARRESTOR, FUSEHOLDER, FUSES, AND LUMINAIRE WIRING
12	ALUMINUM, TENON TOP	55.0	HPS, 400W, VERTICAL MOUNT	1.0	LUMINAIRE, LED, ROADWAY, OUTPUT DESIGNATION H	1.0	FURNISH AND INSTALL NEW SURGE ARRESTOR, FUSEHOLDER, FUSES, AND LUMINAIRE WIRING
13	ALUMINUM, TENON TOP	45.0	HPS, 250W, VERTICAL MOUNT	1.0	LUMINAIRE, LED, ROADWAY, OUTPUT DESIGNATION G	1.0	FURNISH AND INSTALL NEW SURGE ARRESTOR, FUSEHOLDER, FUSES, AND LUMINAIRE WIRING
14	ALUMINUM, TENON TOP	45.0	HPS, 250W, VERTICAL MOUNT	1.0	LUMINAIRE, LED, ROADWAY, OUTPUT DESIGNATION G	1.0	FURNISH AND INSTALL NEW SURGE ARRESTOR, FUSEHOLDER, FUSES, AND LUMINAIRE WIRING
15	ALUMINUM, TENON TOP	45.0	HPS, 250W, VERTICAL MOUNT	1.0	LUMINAIRE, LED, ROADWAY, OUTPUT DESIGNATION G	1.0	FURNISH AND INSTALL NEW SURGE ARRESTOR, FUSEHOLDER, FUSES, AND LUMINAIRE WIRING
16	ALUMINUM, TENON TOP	45.0	HPS, 250W, VERTICAL MOUNT	1.0	LUMINAIRE, LED, ROADWAY, OUTPUT DESIGNATION G	1.0	FURNISH AND INSTALL NEW SURGE ARRESTOR, FUSEHOLDER, FUSES, AND LUMINAIRE WIRING
17	ALUMINUM, TENON TOP	45.0	HPS, 250W, VERTICAL MOUNT	1.0	LUMINAIRE, LED, ROADWAY, OUTPUT DESIGNATION G	1.0	FURNISH AND INSTALL NEW SURGE ARRESTOR, FUSEHOLDER, FUSES, AND LUMINAIRE WIRING
18	ALUMINUM, TENON TOP	45.0	HPS, 250W, VERTICAL MOUNT	1.0	LUMINAIRE, LED, ROADWAY, OUTPUT DESIGNATION G	1.0	FURNISH AND INSTALL NEW SURGE ARRESTOR, FUSEHOLDER, FUSES, AND LUMINAIRE WIRING
19	ALUMINUM, TENON TOP	45.0	HPS, 250W, VERTICAL MOUNT	1.0	LUMINAIRE, LED, ROADWAY, OUTPUT DESIGNATION G	1.0	FURNISH AND INSTALL NEW SURGE ARRESTOR, FUSEHOLDER, FUSES, AND LUMINAIRE WIRING
20	ALUMINUM, TENON TOP	45.0	HPS, 250W, VERTICAL MOUNT	1.0	LUMINAIRE, LED, ROADWAY, OUTPUT DESIGNATION G	1.0	FURNISH AND INSTALL NEW SURGE ARRESTOR, FUSEHOLDER, FUSES, AND LUMINAIRE WIRING
T3	TRUSS SIGN LIGHTING		HPS, SIGN LIGHTING	1.0	LUMINAIRE, LED, SIGN LIGHTING, OUTPUT DESIGNATION E	1.0	FURNISH AND INSTALL NEW SURGE ARRESTOR, FUSEHOLDER, FUSES, AND LUMINAIRE WIRING
C3	CANTILEVER SIGN LIGHTING		HPS, SIGN LIGHTING	1.0	LUMINAIRE, LED, SIGN LIGHTING, OUTPUT DESIGNATION E	1.0	FURNISH AND INSTALL NEW SURGE ARRESTOR, FUSEHOLDER, FUSES, AND LUMINAIRE WIRING
TEMP	WOOD POLE	45.0			LUMINAIRE, LED, ROADWAY, OUTPUT DESIGNATION G	2.0	INSTALL IDOT FURNISHED WOOD POLE. FURNISH AND INSTALL NEW SURGE ARRESTOR, FUSEHOLDER, FUSES, AND LUMINAIRE WIRING

HIGHWAY LIGHTING
SHEET 31 OF 33

NOT TO SCALE

MODEL: Default
FILE NAME: pw:\\tlanroom.dot.illinois.gov:PWIDOT\Documents\IDOT Offices\District 4\Projects\D4_68C98\CADData\CADsheets\IL 6 Lighting (FINAL 12-12-19).dgn

USER NAME = $USER$	DESIGNED -	REVISED -
	DRAWN -	REVISED -
PLOT SCALE = 1:301.946	CHECKED -	REVISED -
PLOT DATE = 12/16/2019	DATE -	REVISED -

STATE OF ILLINOIS
DEPARTMENT OF TRANSPORTATION

PROPOSED LIGHT POLE SCHEDULE
IL 6 & IL 29 INTERCHANGE – PEORIA COUNTY

SCALE: | SHEET OF SHEETS | STA. | TO STA.

F.A.P. RTE.	SECTION	COUNTY	TOTAL SHEETS	SHEET NO.
318	72[(7,7-1,6-1)RS-2; (7-2,3)RS]	PEORIA	180	158
		CONTRACT NO. 68C98		
	ILLINOIS	FED. AID PROJECT		

72[(7,7-1,6-1)RS-2(7-2,3)RS]

Illinois Department of Transportation

Luminaire Performance Table

Project

Date	Contract Number	Section Number	County
12/08/19	68C98		Peoria

Marked Route Number	Municipality
IL-6	

Roadway

Lane Width	# of Lanes	Median Width	I.E.S. Surface Classification	Q-Zero Value
16	1	N/A	R3	0.7

Structure

Mounting Height	Arm Length	Set-Back	Number of Luminaires (Highmast & Sign Lighting Only)
45 FT	15 FT	20 FT	

Luminaire

Description	I.E.S. Lateral Distribution	I.E.S. Vertical Distribution
Luminaire LED Output Designation G	Type II	Medium

Total Light Loss Factor (LLF)	B-U-G Rating	Shields	Dimming Protocol
.684	B3-U0-G3	N/A	10V

Layout

Spacing (to Nearest 5 ft)	Configuration (Opposite, Staggered, 1 Sided, or Median)
170 FT	1 sided

Performance

Average Illuminance, E_{AVE} (fc)	Uniformity Ratio, E_{AVE}/E_{MIN}
0.9	3.0

Average Luminance, L_{AVE} (cd/m^2)	Uniformity Ratio, L_{AVE}/L_{MIN}	Uniformity Ratio, L_{MAX}/L_{MIN}	Veiling Luminance Ratio, L_V/L_{AVE}

Light Tresspass

Distance to ROW (behind pole)	Max. Horizontal Illuminance at ROW, E_H	Max. Vertical Illuminance at ROW, E_V

Notes

1. Set-Back is from Edge of Pavement (white line) except for sign luminaires when it is vertical and horizontal distance from the sign to the luminaire.
2. Lighting calculations shall be performed with all luminaires oriented toward and perpendicular to the roadway.
3. Total Light Loss Factor (LLF) = the product of "Lumen Maintenance" (LLD) = 0.9, "Dirt Depreciation" (LDD) = 0.8, and "Equipment Factors" (EF) = 0.95.
4. Performance requirements shall be the minimum acceptable standards of photometric performance for the luminaire, based on the given conditions listed above.

Printed 12/10/19

BDE 5630 (04/10/19)

Illinois Department of Transportation

Luminaire Performance Table

Project

Date	Contract Number	Section Number	County
12/08/19	68C98		Peoria

Marked Route Number	Municipality
IL-6	

Roadway

Lane Width	# of Lanes	Median Width	I.E.S. Surface Classification	Q-Zero Value
12	2	N/A	R3	0.7

Structure

Mounting Height	Arm Length	Set-Back	Number of Luminaires (Highmast & Sign Lighting Only)
50 FT	15 FT	20 FT	

Luminaire

Description	I.E.S. Lateral Distribution	I.E.S. Vertical Distribution
Luminaire LED Output Designation H	Type II	Medium

Total Light Loss Factor (LLF)	B-U-G Rating	Shields	Dimming Protocol
.684	B3-U0-G3	N/A	10V

Layout

Spacing (to Nearest 5 ft)	Configuration (Opposite, Staggered, 1 Sided, or Median)
265 FT	1 sided

Performance

Average Illuminance, E_{AVE} (fc)	Uniformity Ratio, E_{AVE}/E_{MIN}
0.9	3.0

Average Luminance, L_{AVE} (cd/m^2)	Uniformity Ratio, L_{AVE}/L_{MIN}	Uniformity Ratio, L_{MAX}/L_{MIN}	Veiling Luminance Ratio, L_V/L_{AVE}

Light Tresspass

Distance to ROW (behind pole)	Max. Horizontal Illuminance at ROW, E_H	Max. Vertical Illuminance at ROW, E_V

Notes

1. Set-Back is from Edge of Pavement (white line) except for sign luminaires when it is vertical and horizontal distance from the sign to the luminaire.
2. Lighting calculations shall be performed with all luminaires oriented toward and perpendicular to the roadway.
3. Total Light Loss Factor (LLF) = the product of "Lumen Maintenance" (LLD) = 0.9, "Dirt Depreciation" (LDD) = 0.8, and "Equipment Factors" (EF) = 0.95.
4. Performance requirements shall be the minimum acceptable standards of photometric performance for the luminaire, based on the given conditions listed above.

Printed 12/10/19

BDE 5630 (04/10/19)

USER NAME = $USER$	DESIGNED -	REVISED -
	DRAWN -	REVISED -
PLOT SCALE = 1:301.946	CHECKED -	REVISED -
PLOT DATE = 12/16/2019	DATE -	REVISED -

STATE OF ILLINOIS
DEPARTMENT OF TRANSPORTATION

PROPOSED LED LUMINAIRE PERFORMANCE TABLES
IL 6 & IL 29 INTERCHANGE – PEORIA COUNTY

SCALE: | SHEET OF SHEETS | STA. | TO STA.

F.A.P. RTE.	SECTION	COUNTY	TOTAL SHEETS	SHEET NO.
318	72{(7,7-1,6-1)RS-2; (7-2,3)RS}	PEORIA	180	159
		CONTRACT NO. 68C98		
		ILLINOIS	FED. AID PROJECT	

72{(7,7-1,6-1)RS-2(7-2,3)RS}

MODEL: Default
FILE NAME: pw:\\planroom.dot.illinois.gov:PWIDOT\Documents\IDOT Offices\District 4\Projects\D4 68C98\CADData\CADSheets\IL 6 Lighting (FINAL 12-12-19).dgn

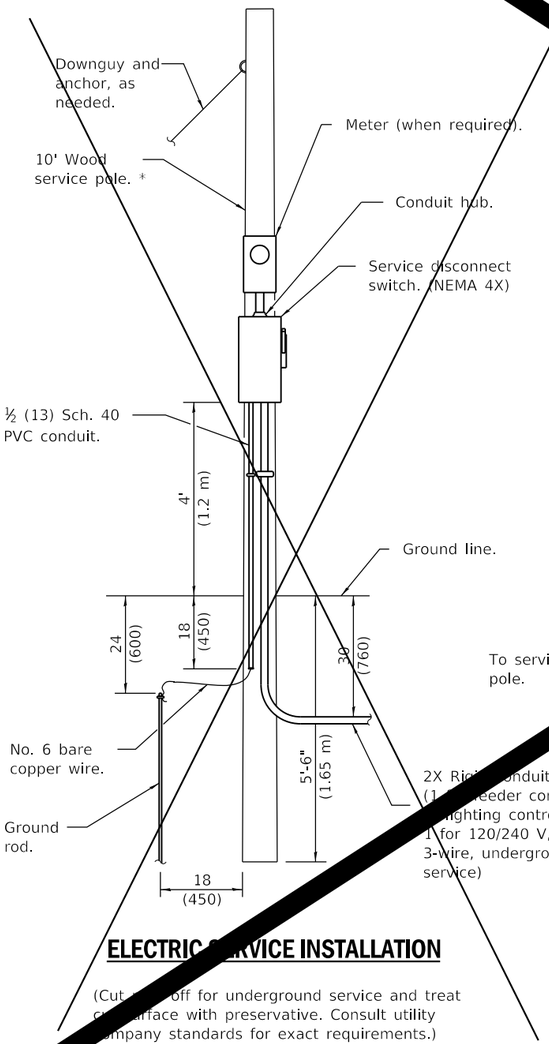

ELECTRIC SERVICE INSTALLATION

(Cut [illegible] off for underground service and treat cut surface with preservative. Consult utility company standards for exact requirements.)

* Size larger as needed.

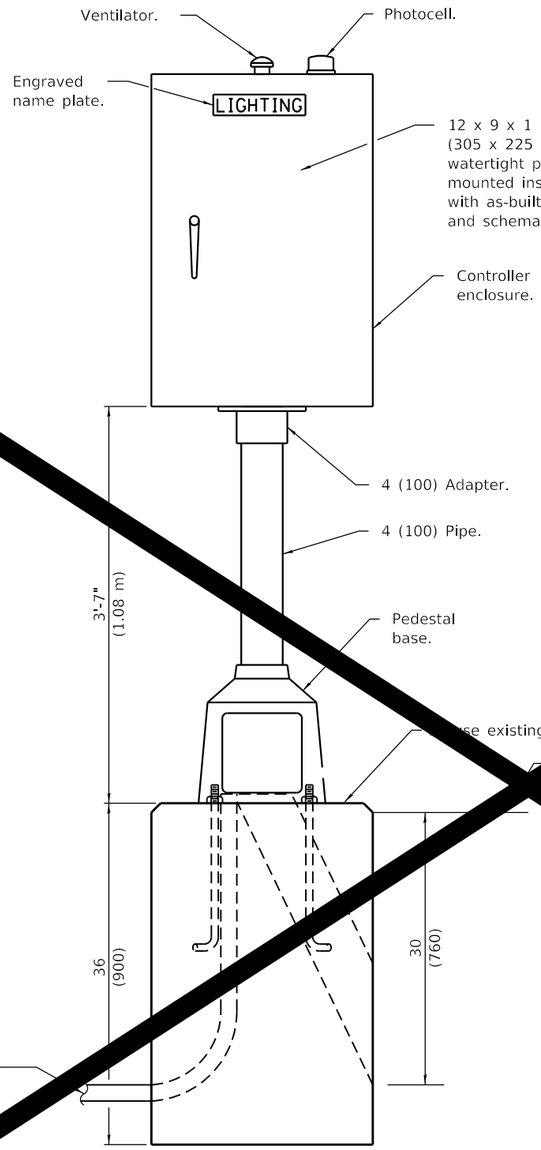

LIGHTING CONTROLLER

SHEET DELETED

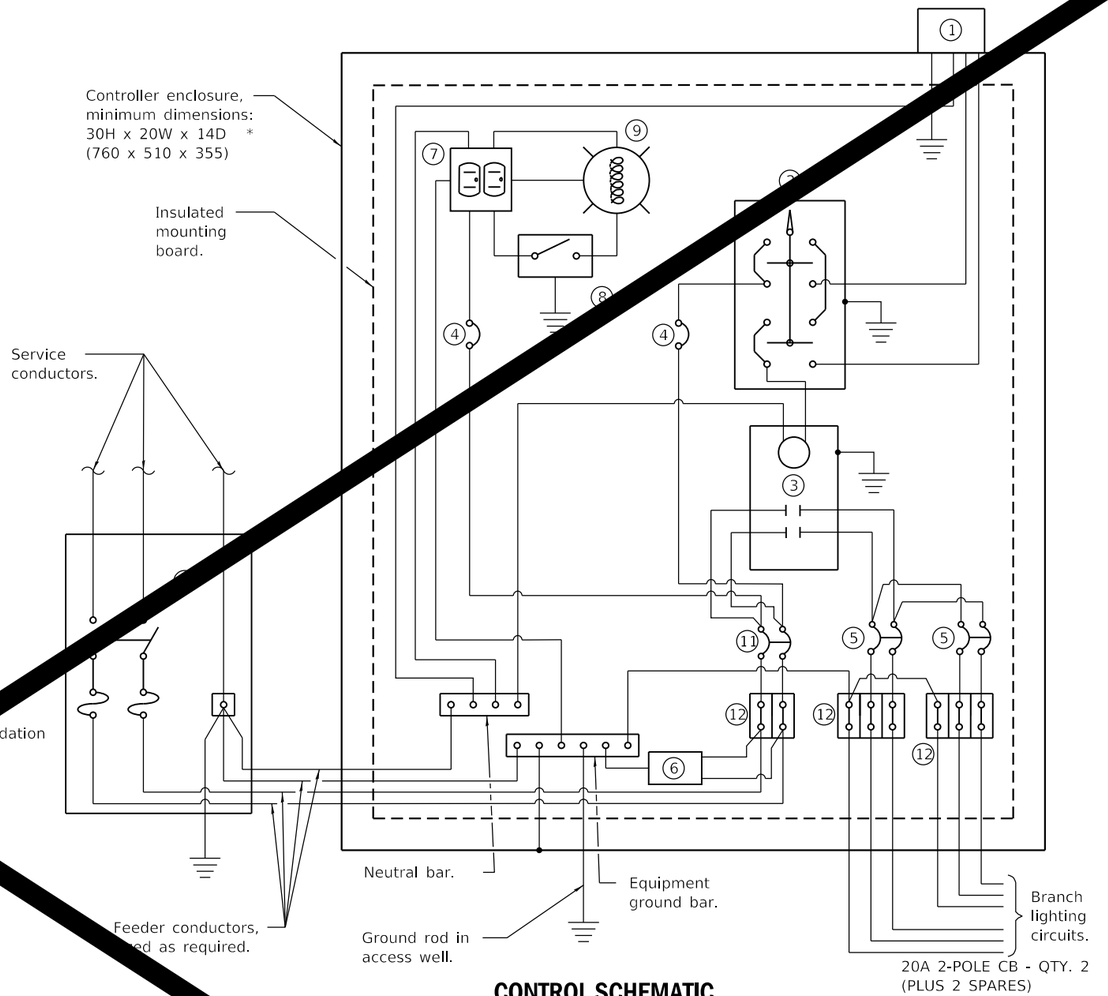

CONTROL SCHEMATIC

1. Photocell with integral surge [illegible]ester.
2. HAND-[illegible]-AUTO selector switch.
3. 60 amp*, elect[illegible]lly held contactor.
4. 15 amp, 1-pole circuit [illegible]aker.
5. 20 amp*, 2-pole circuit breaker (QTY 2.0 PLUS 2 SPARES).
6. Surge arrester.
7. GFCI duplex receptacle.
8. Single-pole, single-throw switch.
9. LED light bulb, enclosed and gasketted with 800 lumen lamp.
10. Service disconnect switch - 2-pole, 3-wire, 60 amp*, fused at 60 amp*, solid neutral in NEMA 4X enclosure having lockable external handle.
11. 60 amp*, 2-pole circuit breaker.
12. Terminal block sized for conductors as shown on plans.

[illegible]ize larger as needed.

All dimensions [illegible] inches (millimeters) unless otherwise sh[illegible]

480V SERVICE VOLTAGE

HIGHWAY LIGHTING
[illegible]EET 33 OF 33
[illegible]T TO SCALE

REV. 2/11/20

USER NAME = $USER$	DESIGNED -	REVISED -	
	DRAWN -	REVISED -	
PLOT SCALE = 1:301.946	CHECKED -	REVISED -	
PLOT DATE = 12/16/2019	DATE -	REVISED -	

STATE OF ILLINOIS
DEPARTMENT OF TRANSPORTATION

PROPOSED LIGHTING CONTROLLER DETAIL
IL 6 & IL 29 INTERCHANGE – PEORIA COUNTY

SCALE: | SHEET OF SHEETS | STA. | TO STA.

F.A.P. RTE.	SECTION	COU[illegible]	TOTAL SHEETS	SHEET NO.
318	72[(7,7-1,6-1)RS-2; (7-2,3)RS]	PEORIA		160
		CONTRACT NO[illegible]98		
	ILLINOIS	FED. AID PROJECT		

MODEL: Default
FILE NAME: c:\dahroom.dot.illinois.gov\PWIDOT\Documents\IDOT Offices\District 4\Projects\D4 #8C98\CADData\CADsheets\IL 6 Lighting (FINAL 12-12-19).dgn

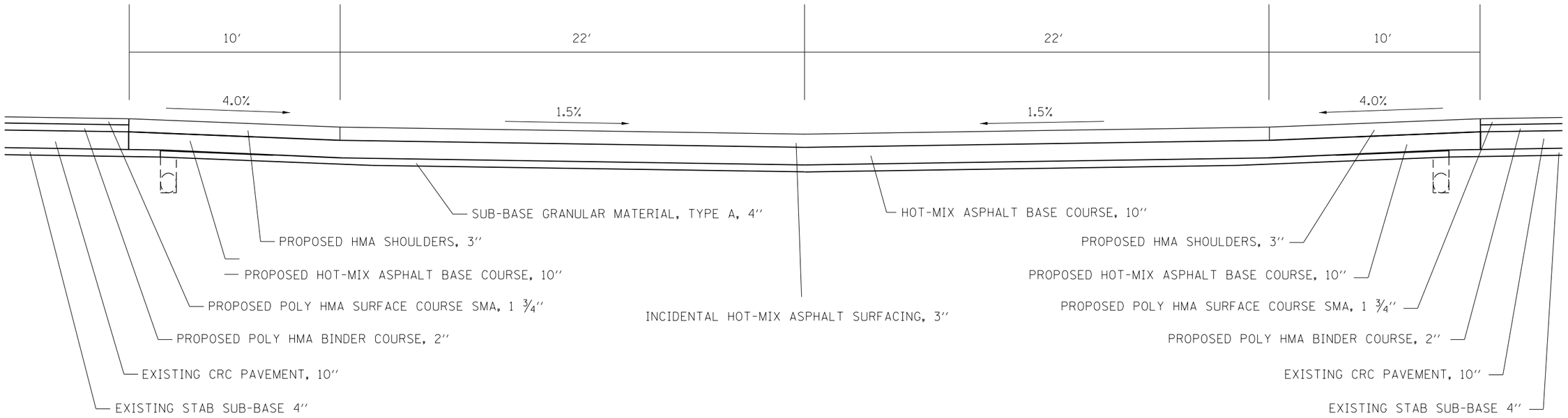

SECTION C - C

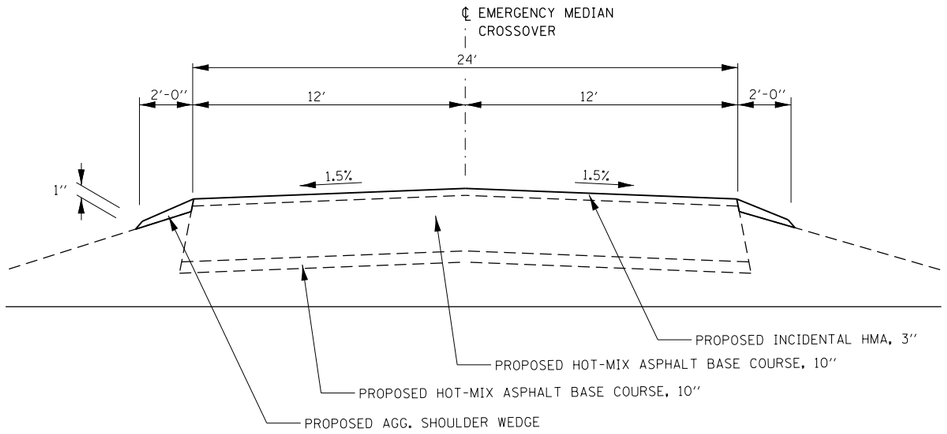

SECTION A - A

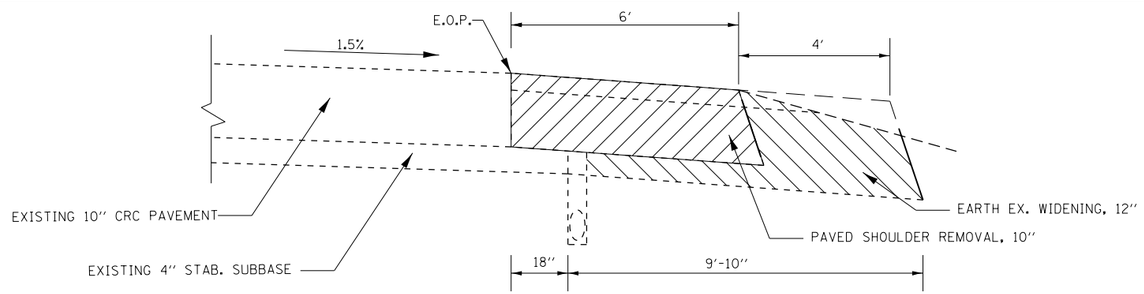

REMOVAL

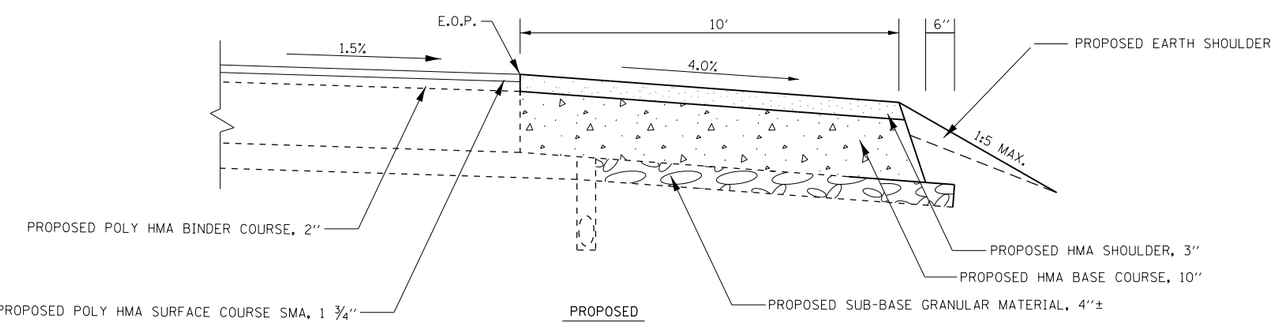

PROPOSED

MODEL: Default
FILE NAME: pw:\\dahroom.dot.illinois.gov:PWIDOT\Documents\IDOT Offices\District 4\Projects\D4 68C98\CADData\CADdrawings\TYPICALS

USER NAME = $USER$	DESIGNED -	REVISED -	
	DRAWN -	REVISED -	
PLOT SCALE = 1:100	CHECKED -	REVISED -	
PLOT DATE = 12/16/2019	DATE -	REVISED -	

STATE OF ILLINOIS
DEPARTMENT OF TRANSPORTATION

EMERGENCY CROSSOVER DETAIL

SCALE: | SHEET 1 OF 11 SHEETS | STA. | TO STA.

F.A.P. RTE.	SECTION	COUNTY	TOTAL SHEETS	SHEET NO.
318		PEORIA	180	161
		CONTRACT NO. 68C98		
	ILLINOIS	FED. AID PROJECT		

72[(7,7-1,6-1)RS-2(7-2,3)RS]

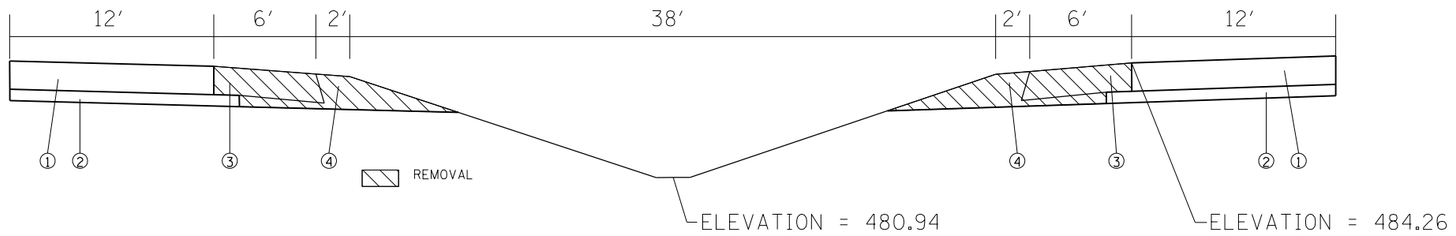

① EXISTING 10″ CRC PAVEMENT
② EXISTING 4″ STABILIZED SUBBASE
③ EXISTING 10″ BITUMINOUS SHOULDER
④ EXISTING AGGREGATE SHOULDER

REMOVAL

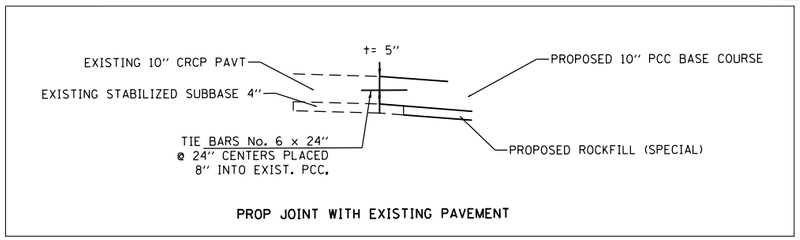

PROP JOINT WITH EXISTING PAVEMENT

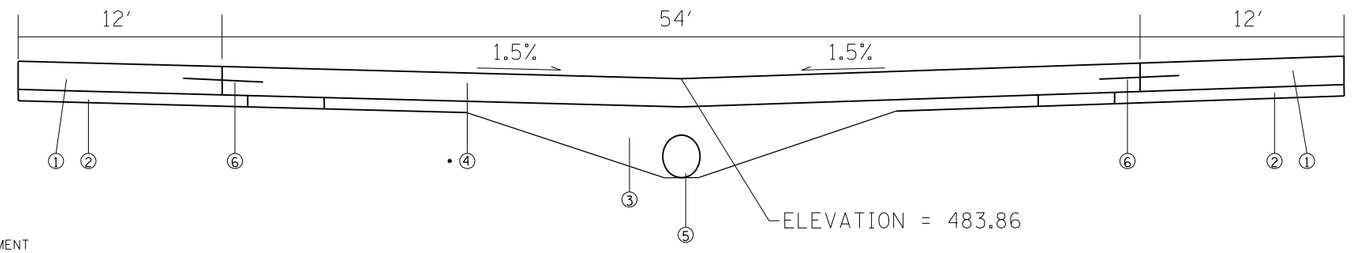

① EXISTING 10″ CRC PAVEMENT
② EXISTING 4″ STABILIZED SUBBASE
③ ROCKFILL (SPECIAL)
• ④ PCC BASE COURSE, 10″
⑤ PIPE CULVERT, CLASS D, TY 1, EQRS 18″
⑥ REINFORCEMENT BARS, EPOXY COATED

• NOTE: REINFORCEMENT BARS WILL NOT BE REQUIRED FOR TRANSVERSE CONSTRUCTIONS JOINTS. BASE COURSE WILL BE SAW CUT AT 20′ SPACINGS AND ONCE ALONG CENTER MEDIAN.

PROPOSED

MODEL: Default
FILE NAME: pw:\\planroom.dot.illinois.gov:PWIDOTDocuments\IDOT Offices\District 4\Projects\D4 68C98\Geometrics\J Turn Design

USER NAME = $USER$	DESIGNED -	REVISED -	
	DRAWN -	REVISED -	
PLOT SCALE = 1:100.255	CHECKED -	REVISED -	
PLOT DATE = 12/16/2019	DATE -	REVISED -	

STATE OF ILLINOIS
DEPARTMENT OF TRANSPORTATION

J TURN CROSS SECTIONS

SCALE: | SHEET 2 OF 11 SHEETS | STA. | TO STA.

F.A.P. RTE.	SECTION	COUNTY	TOTAL SHEETS	SHEET NO.
318		PEORIA	180	162
		CONTRACT NO. 68C98		
		ILLINOIS	FED. AID PROJECT	

72[(7,7-1,6-1)RS-2(7-2,3)RS]

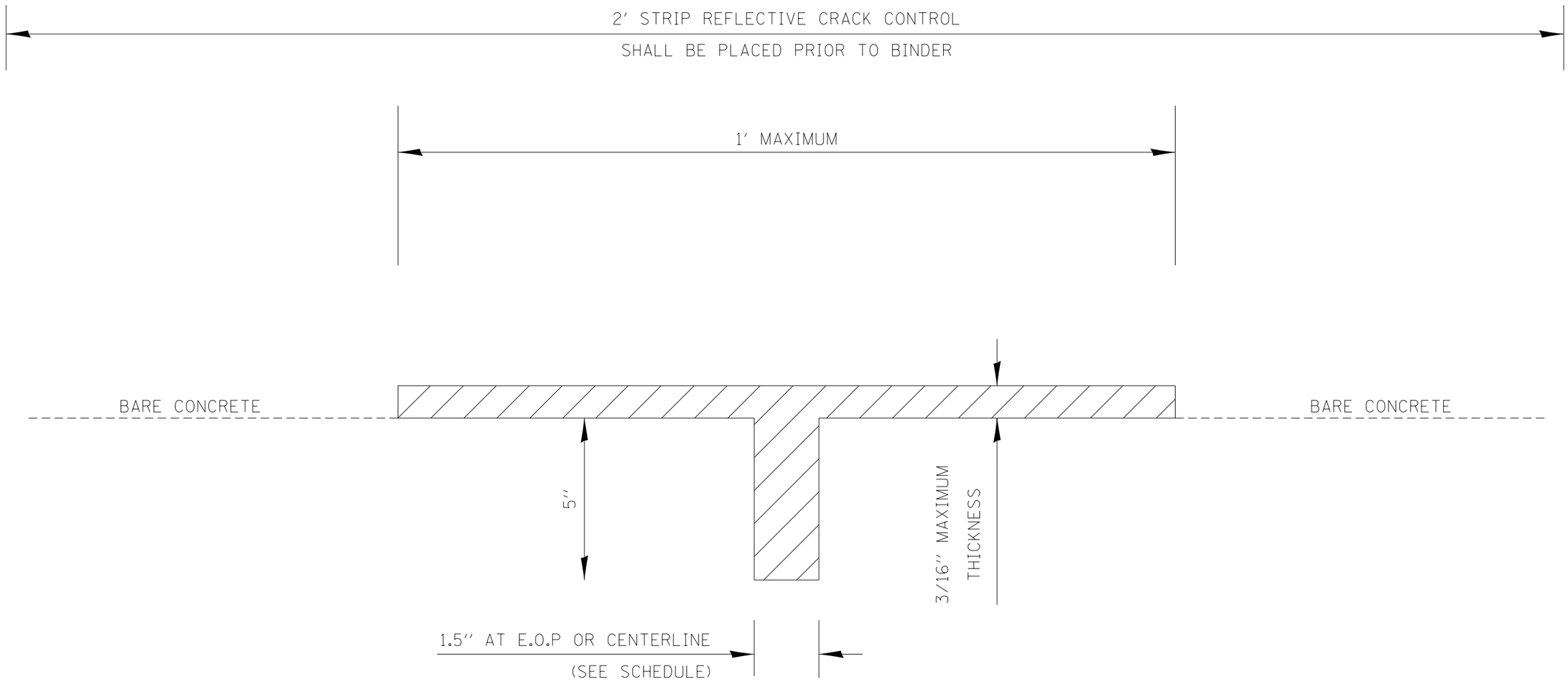

JOINT FILLING WITH MICROSURFACING MATERIAL

MODEL: Default
FILE NAME: pw:\\dbinroom.dot.illinois.gov:PWIDOT\Documents\IDOT Offices\IDistrict 4\Projects\D4 68C98\CADData\CADdrawings\TYPICALS

USER NAME = $USER$	DESIGNED -	REVISED -	**STATE OF ILLINOIS** **DEPARTMENT OF TRANSPORTATION**
	DRAWN -	REVISED -	
PLOT SCALE = 1:100	CHECKED -	REVISED -	
PLOT DATE = 12/16/2019	DATE -	REVISED -	

JOINT FILLING WITH MICROSURFACING MATERIAL
STRIP REFLECTIVE CRACK CONTROL

SCALE: | SHEET 3 OF 11 SHEETS | STA. | TO STA.

F.A.P. RTE.	SECTION	COUNTY	TOTAL SHEETS	SHEET NO.
318		PEORIA	180	163
		CONTRACT NO. 68C98		
	ILLINOIS	FED. AID PROJECT		

72[(7,7-1,6-1)RS-2(7-2,3)RS]

END OF PROJECT BUTT JOINT

NB STA 20+97
SB STA 21+54

NB STA 19+47
SB STA 20+04

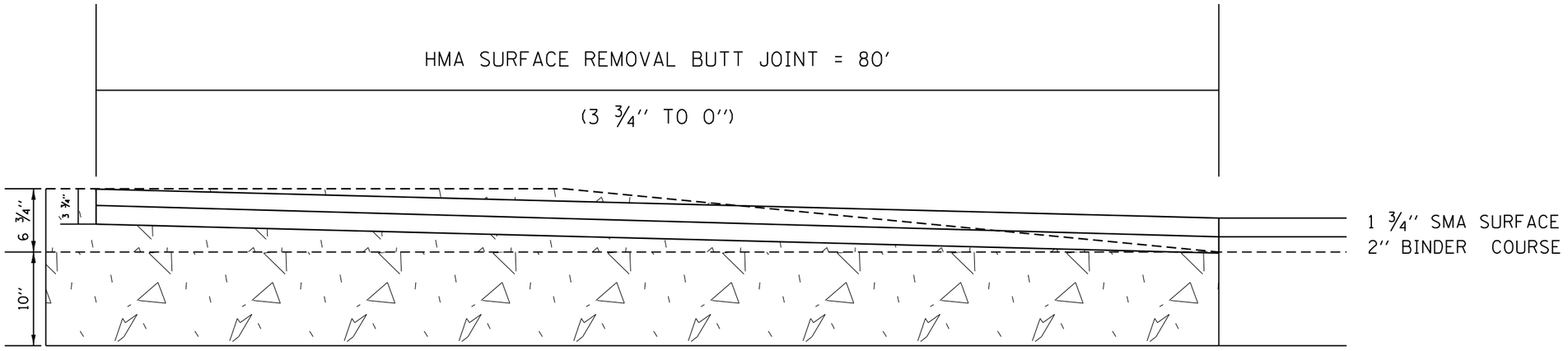

BEGINNING OF PROJECT BUTT JOINT

NB STA 860+26
SB STA 866+25

NB STA 860+96
SB STA 866+95

NB STA 861+76
SB STA 867+75

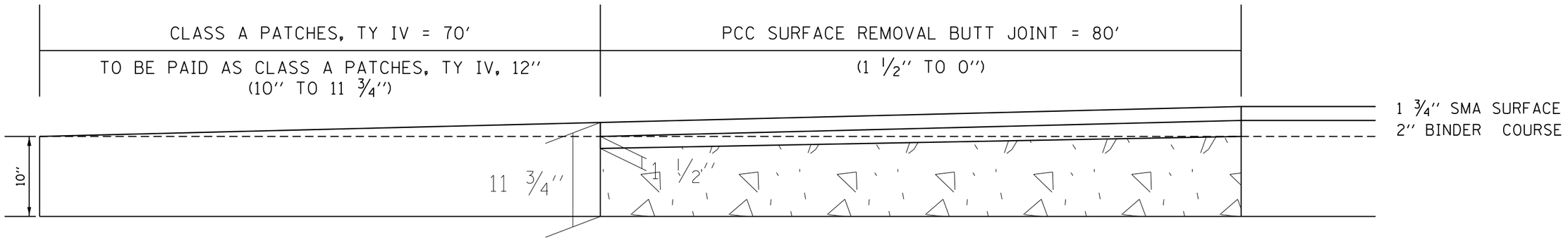

USER NAME = $USER$	DESIGNED -	REVISED -	**STATE OF ILLINOIS** **DEPARTMENT OF TRANSPORTATION**
	DRAWN -	REVISED -	
PLOT SCALE = 1:100	CHECKED -	REVISED -	
PLOT DATE = 12/16/2019	DATE -	REVISED -	

BUTT JOINT DETAILS

SCALE: | SHEET 4 OF 11 SHEETS | STA. | TO STA.

F.A.P. RTE.	SECTION	COUNTY	TOTAL SHEETS	SHEET NO.
318		PEORIA	180	164
		CONTRACT NO. 68C98		
	ILLINOIS	FED. AID PROJECT		

72[(7,7-1,6-1)RS-2(7-2,3)RS]

MODEL: Default
FILE NAME: pw:\\planroom.dot.illinois.gov:PWIDOT\Documents\IDOT Offices\District 4\Projects\d4_68C98\CADD\stat\CADDrawings\TYPICALS

RADNOR BRIDGES

NB STA 981+81.6
NB STA 982+33.7
SB STA 981+72.1
SB STA 982+28.9

NB STA 981+11.6
NB STA983+03.7
SB STA 981+02.1
SB STA 982+98.9

NB STA 980+31.6
NB STA 983+83.7
SB STA 980+22.1
SB STA 983+78.9

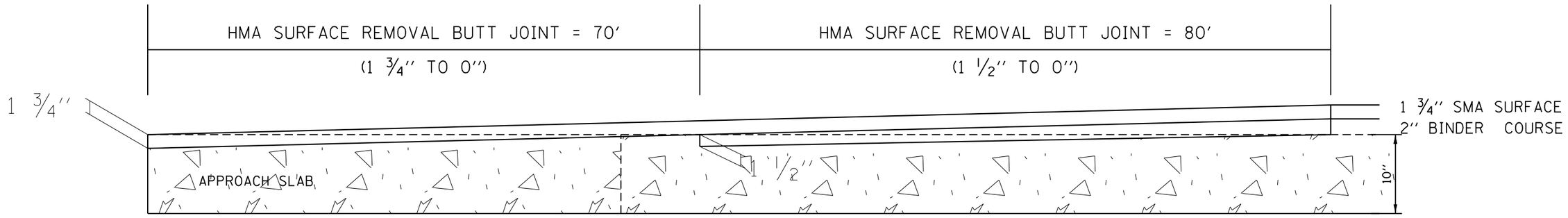

ALLEN INTERCHANGE - RAMP B

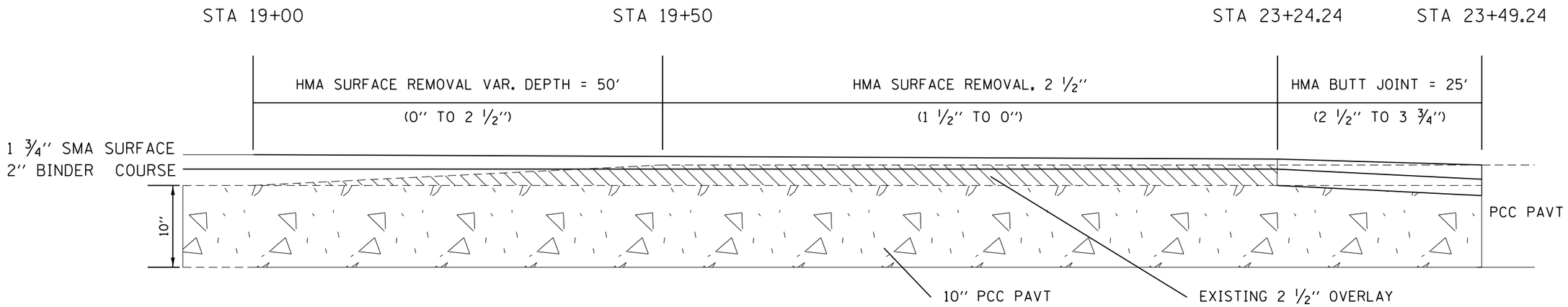

MODEL: Default
FILE NAME: pw:\\planroom.dot.illinois.gov:PWIDOT\Documents\IDOT Offices\District 4\Projects\D4_68C98\CADD\stat\CADdrawings\TYPICALS

USER NAME = $USER$	DESIGNED -	REVISED -	**STATE OF ILLINOIS DEPARTMENT OF TRANSPORTATION**
	DRAWN -	REVISED -	
PLOT SCALE = 1:100	CHECKED -	REVISED -	
PLOT DATE = 12/16/2019	DATE -	REVISED -	

BUTT JOINT DETAILS

SCALE: | SHEET 5 OF 11 SHEETS | STA. | TO STA.

F.A.P. RTE.	SECTION	COUNTY	TOTAL SHEETS	SHEET NO.
318		PEORIA	180	165
		CONTRACT NO. 68C98		
	ILLINOIS	FED. AID PROJECT		

72[(7,7-1,6-1)RS-2(7-2,3)RS]

ALLEN INTERCHANGE: RAMPS A, C, AND D

RAMP A: STA 2+00
RAMP C: STA 22+50
RAMP D: STA 1+98

RAMP A: STA 1+26.1
RAMP C: STA 23+18
RAMP D: STA 1+36.7

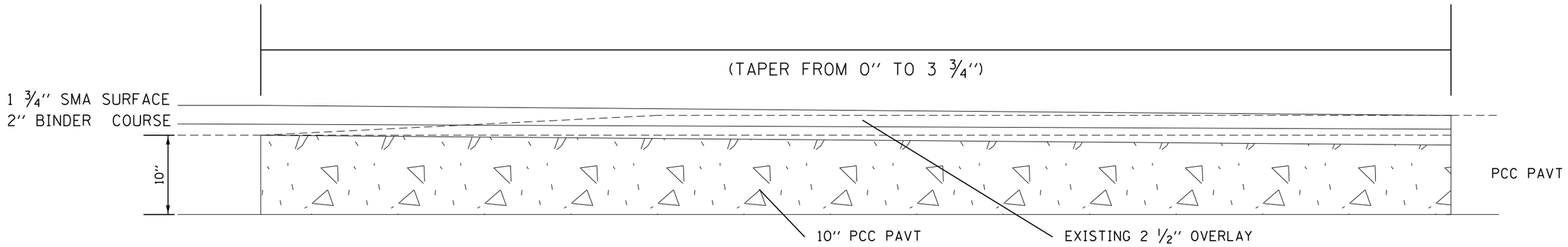

NOTE: SHOULDER BUTT JOINT TO MATCH PAVEMENT TAPER RATE

KNOXVILLE INTERCHANGE: RAMP E

RAMP E: STA 7+59

RAMP E: STA 6+79

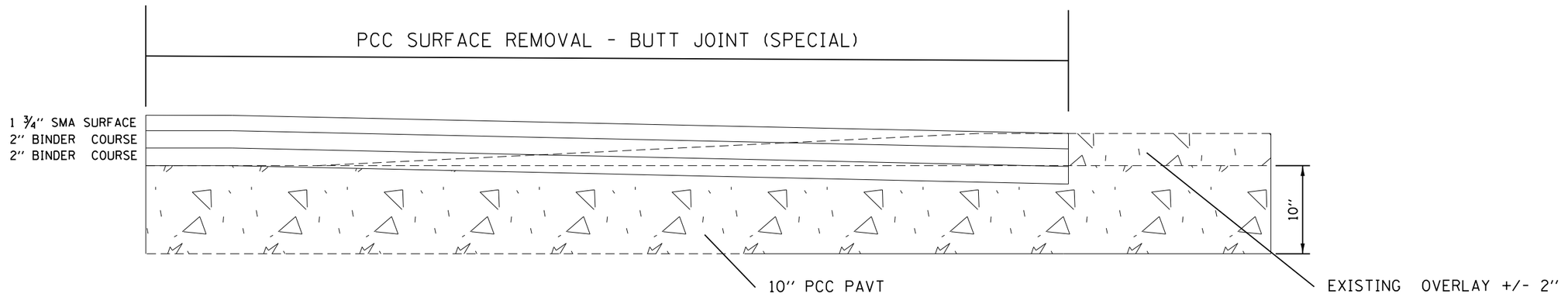

MODEL: Default
FILE NAME: pw:\\planroom.dot.illinois.gov:PWIDOT\Documents\IDOT Offices\District 4\Projects\D4_68C98\CADD\stat\CADDstat\CADdrawings\TYPICALS

USER NAME = $USER$	DESIGNED -	REVISED -	**STATE OF ILLINOIS DEPARTMENT OF TRANSPORTATION**
	DRAWN -	REVISED -	
PLOT SCALE = 1:100	CHECKED -	REVISED -	
PLOT DATE = 12/16/2019	DATE -	REVISED -	

BUTT JOINT DETAILS

SCALE: | SHEET 6 OF 11 SHEETS | STA. | TO STA.

F.A.P. RTE.	SECTION	COUNTY	TOTAL SHEETS	SHEET NO.
318		PEORIA	180	166
		CONTRACT NO. 68C98		
	ILLINOIS	FED. AID PROJECT		

72[(7,7-1,6-1)RS-2(7-2,3)RS]

KNOXVILLE INTERCHANGE: RAMPS B AND D

RAMP B: STA 1+88
RAMP D: STA 25+28.9

RAMP B: STA 1+38
RAMP D: STA 78.9

RAMP B : STA 0+82.9 (RT TL)
RAMP B: STA 0+68.8
RAMP D: STA 26+27

RAMP B: STA 0+50.2 (RT TL)
RAMP B: STA 0+43.5
RAMP D: STA 26+55

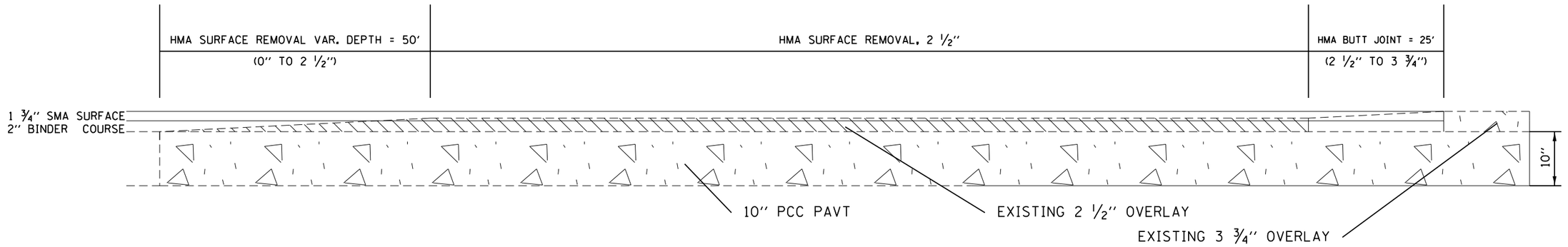

KNOXVILLE INTERCHANGE: RAMPS A AND C

RAMP A: STA 25+66
RAMP C: STA 3+29

RAMP A: STA 26+16
RAMP C: STA 2+79

RAMP A: STA 04+89.3
RAMP A: STA 27+86.2
RAMP C : STA 1+98

RAMP A: STA 05+29.1
RAMP A: STA 28+29.2
RAMP C : STA 1+58

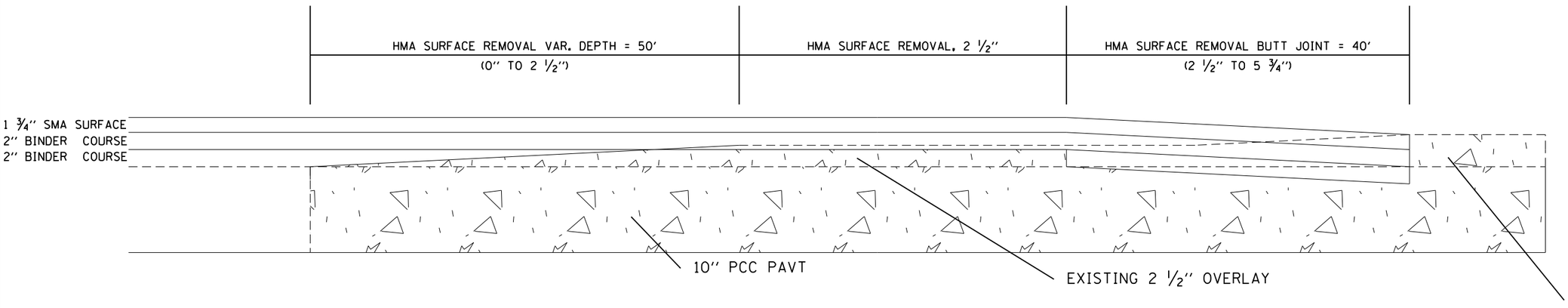

USER NAME = $USER$	DESIGNED -	REVISED -	**STATE OF ILLINOIS** **DEPARTMENT OF TRANSPORTATION**
	DRAWN -	REVISED -	
PLOT SCALE = 1:100	CHECKED -	REVISED -	
PLOT DATE = 12/16/2019	DATE -	REVISED -	

BUTT JOINT DETAILS

SCALE: | SHEET 7 OF 11 SHEETS | STA. | TO STA.

F.A.P. RTE.	SECTION	COUNTY	TOTAL SHEETS	SHEET NO.
318		PEORIA	180	167
		CONTRACT NO. 68C98		
	ILLINOIS	FED. AID PROJECT		

72[(7,7-1,6-1)RS-2(7-2,3)RS]

MODEL: Default
FILE NAME: pw:\\planroom.dot.illinois.gov:PWIDOT\Documents\IDOT Offices\District 4\Projects\D4_68C98\CADData\CADdrawings\TYPICALS

KNOXVILLE INTERCHANGE: RAMPS A, C, AND E

PAVEMENT BUTT JOINT

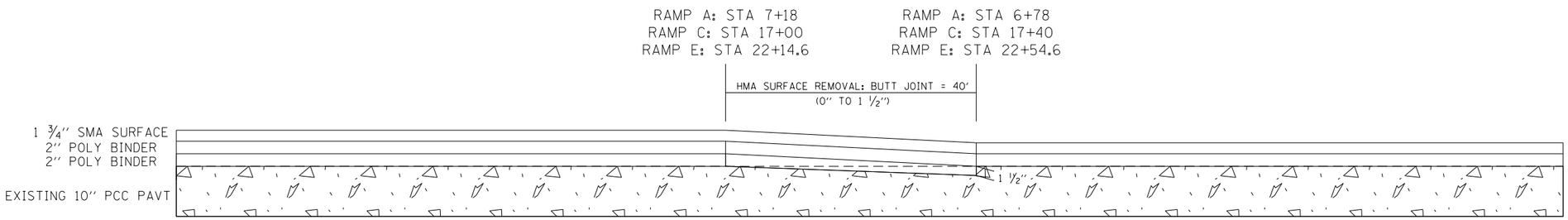

SHOULDER BUTT JOINT

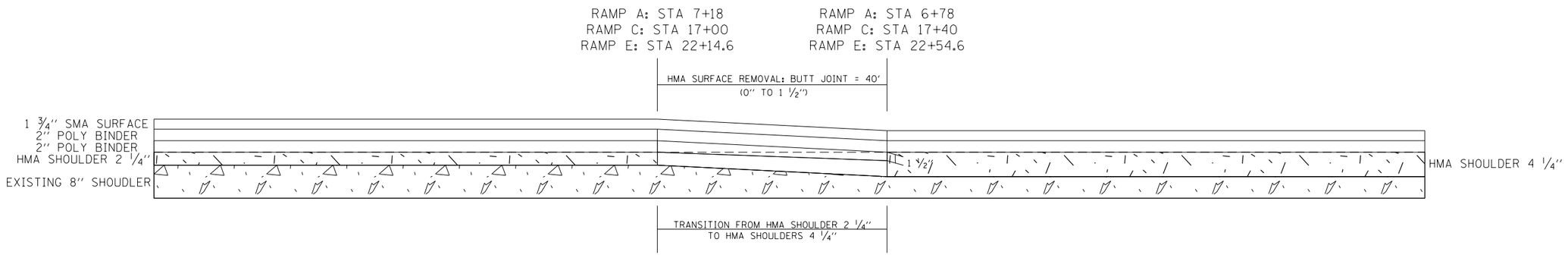

MODEL: Default
FILE NAME: pw:\\planroom.dot.illinois.gov:PWIDOT\Documents\IDOT Offices\District 4\Projects\D4_68C98\CADData\CADsheets\PROPOSED

USER NAME = $USER$	DESIGNED -	REVISED -	
	DRAWN -	REVISED -	
PLOT SCALE = 1:100	CHECKED -	REVISED -	
PLOT DATE = 12/16/2019	DATE -	REVISED -	

STATE OF ILLINOIS
DEPARTMENT OF TRANSPORTATION

BUTT JOINT DETAILS

SCALE: | SHEET 8 OF 11 SHEETS | STA. | TO STA.

F.A.P. RTE.	SECTION	COUNTY	TOTAL SHEETS	SHEET NO.
318		PEORIA	180	168
		CONTRACT NO. 68C98		
	ILLINOIS	FED. AID PROJECT		

72[(7,7-1,6-1)RS-2(7-2,3)RS]

STA 978+36
SN 072-2013
TWIN 6' CORRUGATED METAL
PLATE PIPE CULVERT

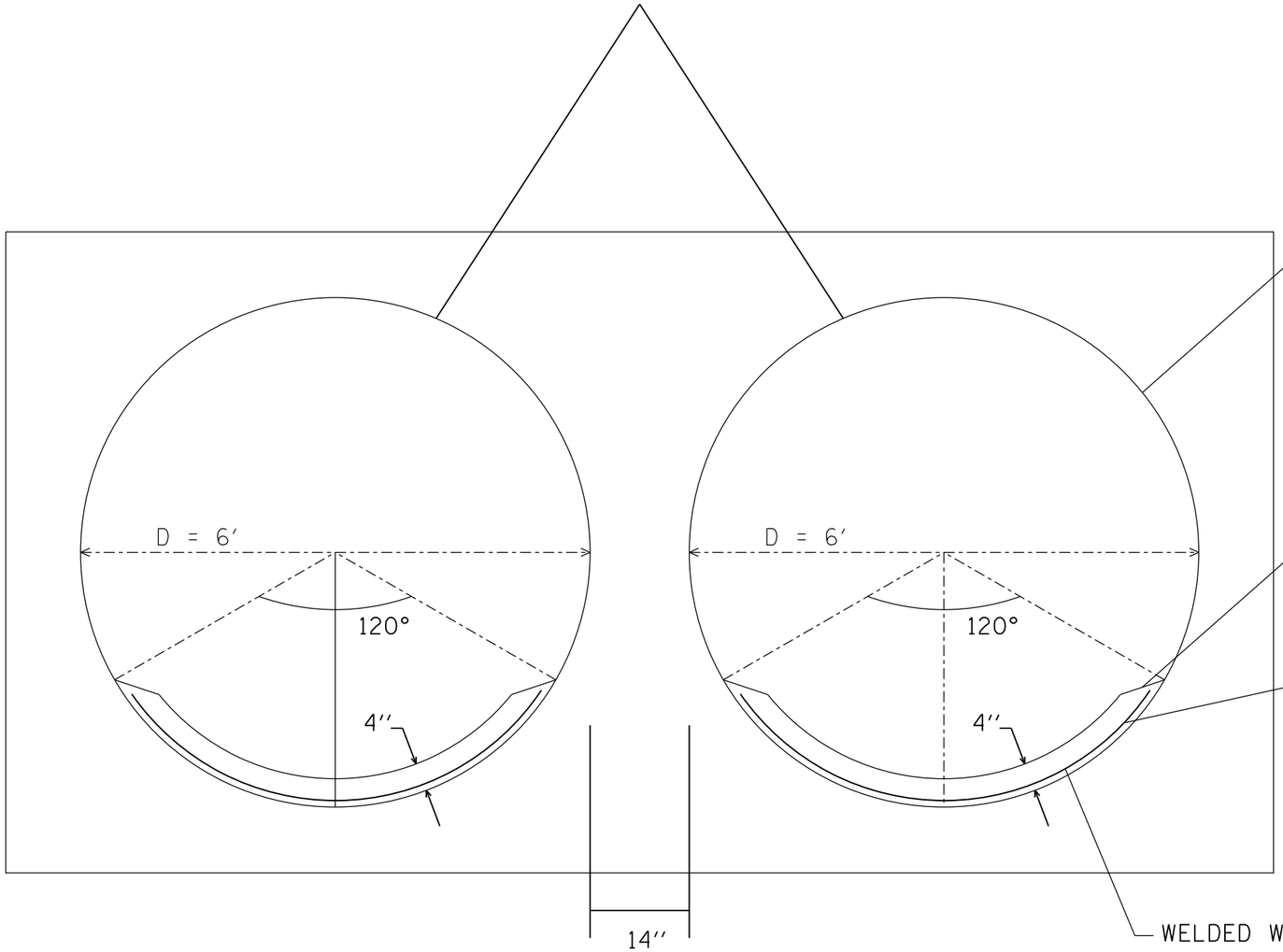

EXISTING CMP

3:1 MIN

TACK WELD DIRECTLY TO CULVERT TRANSVERSLY
AND LONGITUDINALLY AS NEEDED

WELDED WIRE FABRIC
6 X 6 - W 4.0 X 4.0
Wt. 58 LBS/100 SQ FT
PAID FOR AS PAVEMENT REINFORCEMENT

MODEL: Default
FILE NAME: pw:\\planroom.dot.illinois.gov:PWIDOT\Documents\IDOT Offices\District 4\Projects\D4_68C98\CADData\CADSheets\DRAINAGE DETAIL

USER NAME = $USER$	DESIGNED -	REVISED -	
	DRAWN -	REVISED -	
PLOT SCALE = 1:100	CHECKED -	REVISED -	
PLOT DATE = 12/16/2019	DATE -	REVISED -	

STATE OF ILLINOIS
DEPARTMENT OF TRANSPORTATION

CULVERT LINING DETAIL

SCALE: | SHEET 9 OF 11 SHEETS | STA. | TO STA.

F.A.P. RTE.	SECTION	COUNTY	TOTAL SHEETS	SHEET NO.
318		PEORIA	180	169
		CONTRACT NO. 68C98		
	ILLINOIS	FED. AID PROJECT		

72[(7,7-1,6-1)RS-2(7-2,3)RS]

COLLAR FOR RCCP CULVERT AT
STA. 501+00, 513+00 & STA. 820+00
SEE DRAINAGE DETAIL LOCATION 8

END VIEW

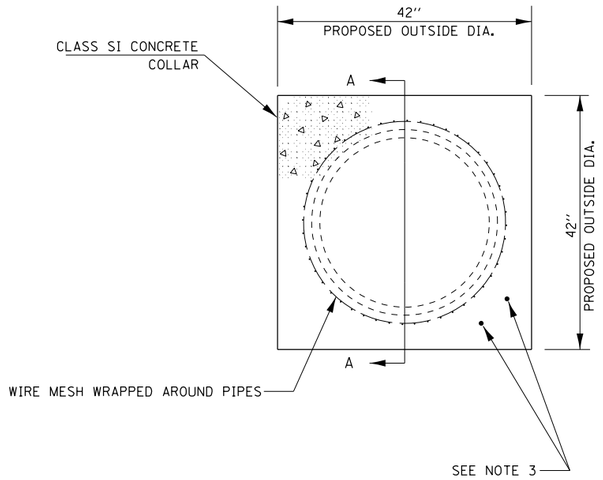

CONCRETE COLLAR= 0.5 CU. YDS.
PER COLLAR

SECTION A - A

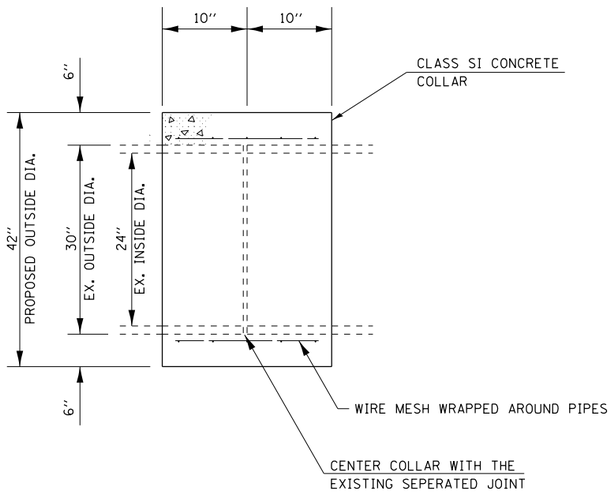

GENERAL NOTES

1. CLASS SI CONCRETE SHALL BE USED THROUGHOUT.
2. THE WIRE MESH SHALL WEIGH NOT LESS THAN 54"/100 SQ. FT.
3. WHEN CONCRETE COLLARS ARE CONSTRUCTED ADJACENT TO AN EXISTING CONCRETE STRUCTURE (INLET BOXES, ETC.) EXPANSION BOLTS, SHALL BE USED AND WILL BE INCLUDED IN THE COST OF CONCRETE COLLARS.
4. THE COST OF THE COLLAR SHALL INCLUDED ALL MATERIAL, EQUIPMENT, LABOR, AND ADDITIONAL WORK REQUIRED TO PROPERLY COMPLETE THE WORK IN PLACE.

DRAWING NOT TO SCALE
ACTUAL FIELD LOCATIONS AND
MEASUREMENTS SHALL BE VERIFIED

MODEL: Default
FILE NAME: pw:\\planroom.dot.illinois.gov:PWIDOT\Documents\IDOT Offices\District 4\Projects\D4 68C98\CADData\CADSheets\DRAINAGE DETAIL

USER NAME = $USER$	DESIGNED -	REVISED -	
	DRAWN -	REVISED -	
PLOT SCALE = 1:100	CHECKED -	REVISED -	
PLOT DATE = 12/16/2019	DATE -	REVISED -	

STATE OF ILLINOIS
DEPARTMENT OF TRANSPORTATION

COLLAR DETAILS

SCALE: | SHEET 10 OF 11 SHEETS | STA. | TO STA.

F.A.P. RTE.	SECTION	COUNTY	TOTAL SHEETS	SHEET NO.
318		PEORIA	180	170
		CONTRACT NO. 68C98		
	ILLINOIS	FED. AID PROJECT		

72[(7,7-1,6-1)RS-2(7-2,3)RS]

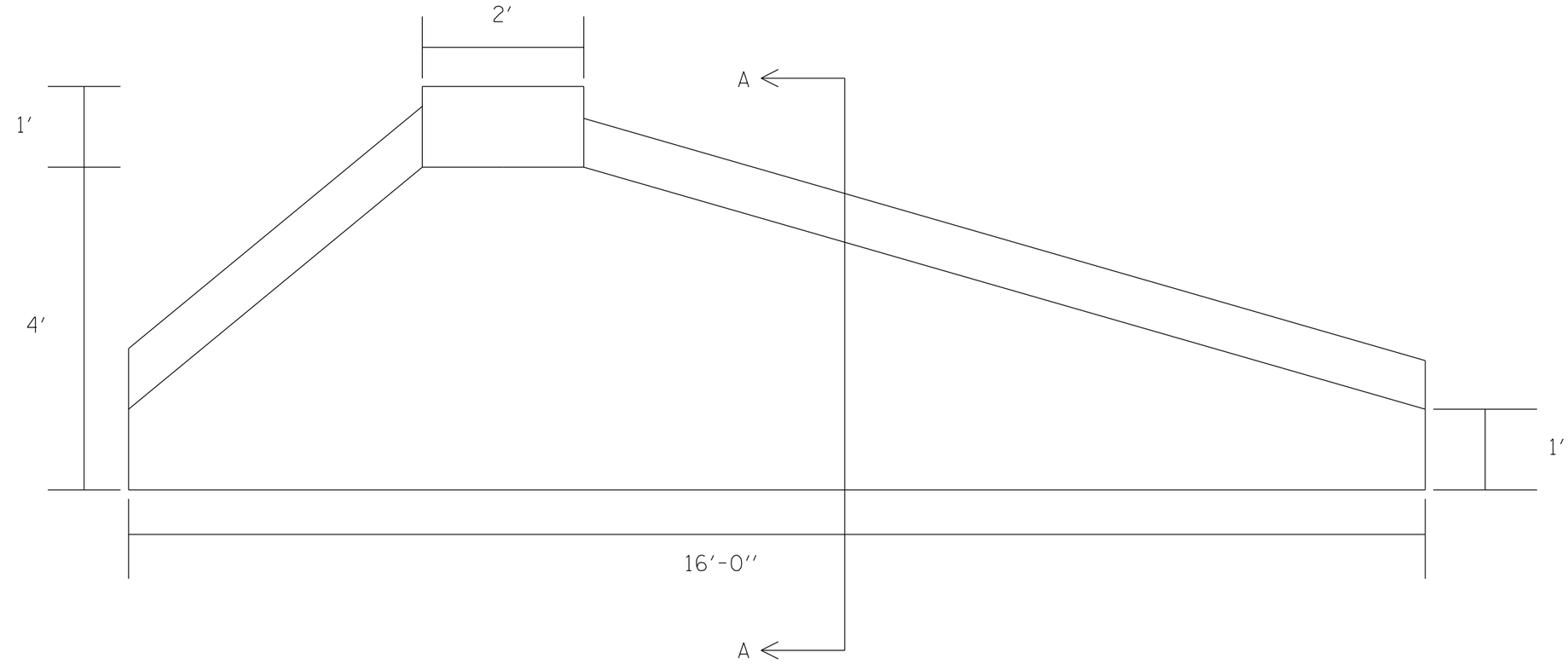

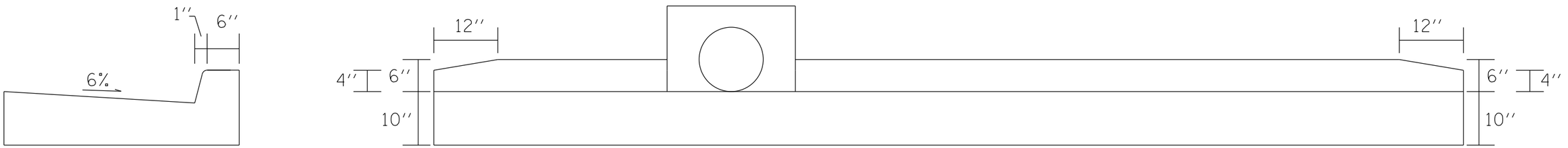

MODEL: Default
FILE NAME: pw:\\labnroom.dot.illinois.gov:PWIDOT\Documents\IDOT Offices\District 4\Projects\D4 68C98\CADData\CADsheets\DRAINAGE DETAIL

USER NAME = $USER$	DESIGNED -	REVISED -	
	DRAWN -	REVISED -	
PLOT SCALE = 1:100	CHECKED -	REVISED -	
PLOT DATE = 12/16/2019	DATE -	REVISED -	

STATE OF ILLINOIS
DEPARTMENT OF TRANSPORTATION

CLASS SI CONCRETE (OUTLET) SPECIAL

SCALE: | SHEET 11 OF 11 SHEETS | STA. | TO STA.

F.A.P. RTE.	SECTION	COUNTY	TOTAL SHEETS	SHEET NO.
318		PEORIA	180	171
		CONTRACT NO. 68C98		
	ILLINOIS	FED. AID PROJECT		

72[(7,7-1,6-1)RS-2(7-2,3)RS]

GENERAL NOTES

Plan dimensions and details relative to existing plans are subject to nominal construction variations. The Contractor shall field verify existing dimensions and details affecting new construction and make necessary approved adjustments prior to construction or ordering of materials. Such variations shall not be cause for additional compensation for a change in scope of the work, however, the Contractor will be paid for the quantity actually furnished at the unit price bid for the work.

Reinforcement bars designated (E) shall be epoxy coated.

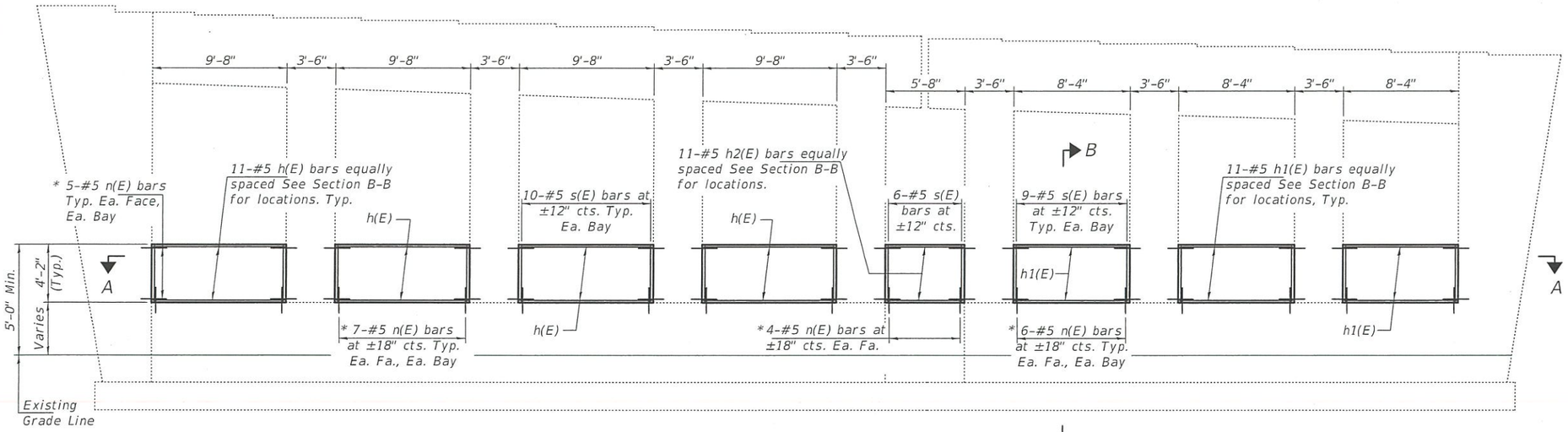

ELEVATION

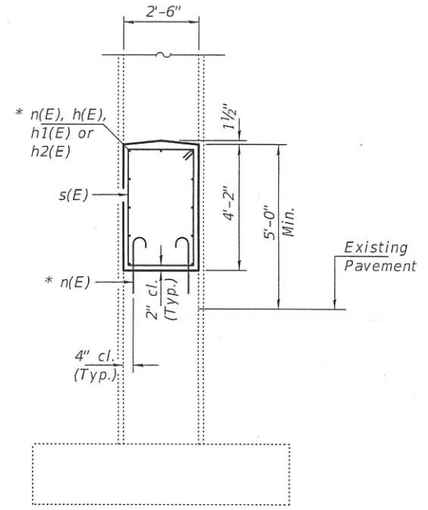

SECTION B-B

* Epoxy grout n(E) bars in 9" min. holes according to Article 584 of the Standard Specifications.

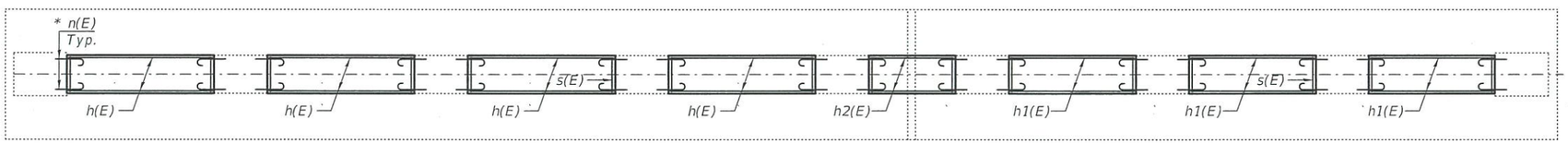

SECTION A-A

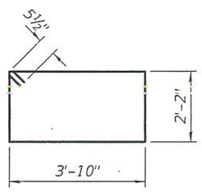

BAR s(E)

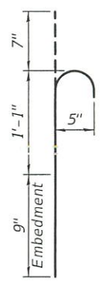

BAR n(E)

BILL OF MATERIAL

Bar	No.	Size	Length	Shape
h(E)	44	#5	9'-4"	
h1(E)	33	#5	8'-0"	
h3(E)	11	#5	5'-4"	
n(E)	260	#5	2'-5"	
s(E)	73	#5	12'-11"	
Concrete Structures			Cu. Yd.	27.0
Reinforcement Bars, Epoxy Coated			Pound	2400

Note:
The cost of epoxy grouting threaded rods shall be included with Reinforcement Bars, Epoxy Coated.

TOTAL BILL OF MATERIAL

ITEM	UNIT	QUANTITY
Reinforcement Bars, Epoxy Coated	Pound	2400
Concrete Structures	Cu. Yd.	27.0

* 72 [(7, 7-1/4-1) RS - 2(7-2 3/4) RS]

DAVID CARL PUZEY
081.005470
LICENSED STRUCTURAL ENGINEER OF
STATE OF ILLINOIS

EXPIRES 11-30-2020

DESIGNED - Ary Thr	EXAMINED	ENGINEER OF STRUCTURAL SERVICES	DATE - January 07, 2020	STATE OF ILLINOIS DEPARTMENT OF TRANSPORTATION	PIER WALL EXTENSION SN 072-0147
CHECKED - Stephen M Ryan	PASSED	ENGINEER OF BRIDGES AND STRUCTURES	REVISED -		SHEET NO. 1 OF 1 SHEETS
DRAWN - Venkat Reddy			REVISED -		
CHECKED - AJR SMR			REVISED -		

F.A. RTE.	SECTION	COUNTY	TOTAL SHEETS	SHEET NO.
405	*	PEORIA	182	178
		CONTRACT NO. 68C78		
		ILLINOIS	FED. AID PROJECT	

GENERAL NOTES

Plan dimensions and details relative to existing plans are subject to nominal construction variations. The Contractor shall field verify existing dimensions and details affecting new construction and make necessary approved adjustments prior to construction or ordering of materials. Such variations shall not be cause for additional compensation for a change in scope of the work, however, the Contractor will be paid for the quantity actually furnished at the unit price bid for the work.

Reinforcement bars designated (E) shall be epoxy coated.

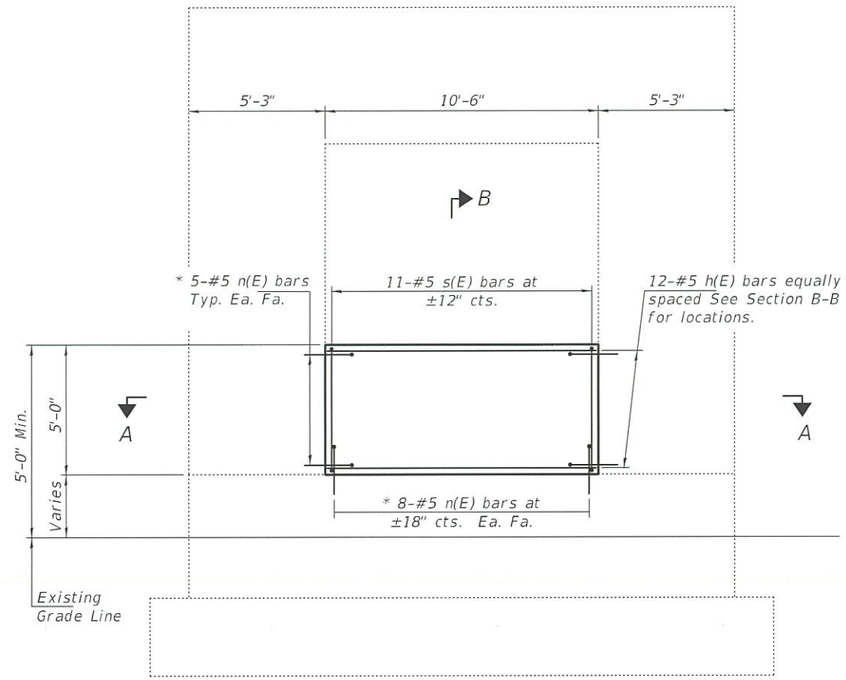

ELEVATION

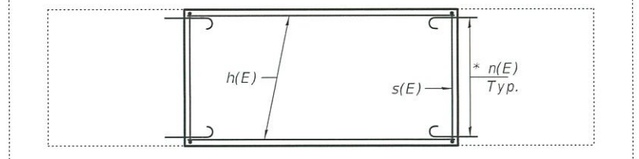

SECTION A-A

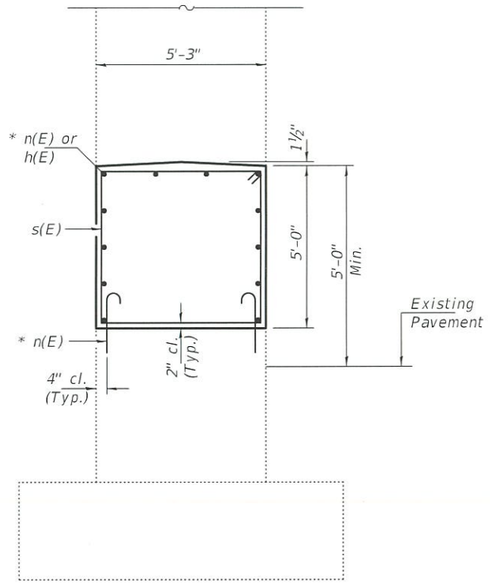

SECTION B-B

* Epoxy grout n(E) bars in 9" min. holes according to Article 584 of the Standard Specifications.

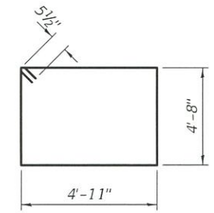

BAR s(E)

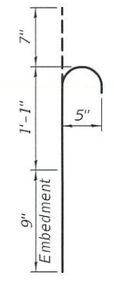

BAR n(E)

Note:
The cost of epoxy grouting threaded rods shall be included with Reinforcement Bars, Epoxy Coated.

BILL OF MATERIAL

Bar	No.	Size	Length	Shape
h(E)	12	#5	10'-2"	
n(E)	36	#5	2'-5"	
s(E)	11	#5	20'-1"	
Concrete Structures			Cu. Yd.	10.2
Reinforcement Bars, Epoxy Coated			Pound	450

TOTAL BILL OF MATERIAL

ITEM	UNIT	QUANTITY
Reinforcement Bars, Epoxy Coated	Pound	450
Concrete Structures	Cu. Yd.	10.2

* 72 C(7,7-1,6-1)RS-2(7-2,3)RS]

DAVID CARL PUZEY
081.005470
LICENSED STRUCTURAL ENGINEER OF
STATE OF ILLINOIS
Expires 11/30/2020

DESIGNED -		EXAMINED	ENGINEER OF STRUCTURAL SERVICES
CHECKED -	Stephen M Ryan	PASSED	ENGINEER OF BRIDGES AND STRUCTURES
DRAWN -	Venkat Reddy	DATE -	January 07, 2020
CHECKED -	AJA SMR	REVISED -	
		REVISED -	

STATE OF ILLINOIS
DEPARTMENT OF TRANSPORTATION

PIER WALL EXTENSION
SN 072-0143
SHEET NO. 1 OF 1 SHEETS

F.A. RTE.	SECTION	COUNTY	TOTAL SHEETS	SHEET NO.
405	X	PEORIA	132	1718
		CONTRACT NO. 68C98		
	ILLINOIS	FED. AID PROJECT		

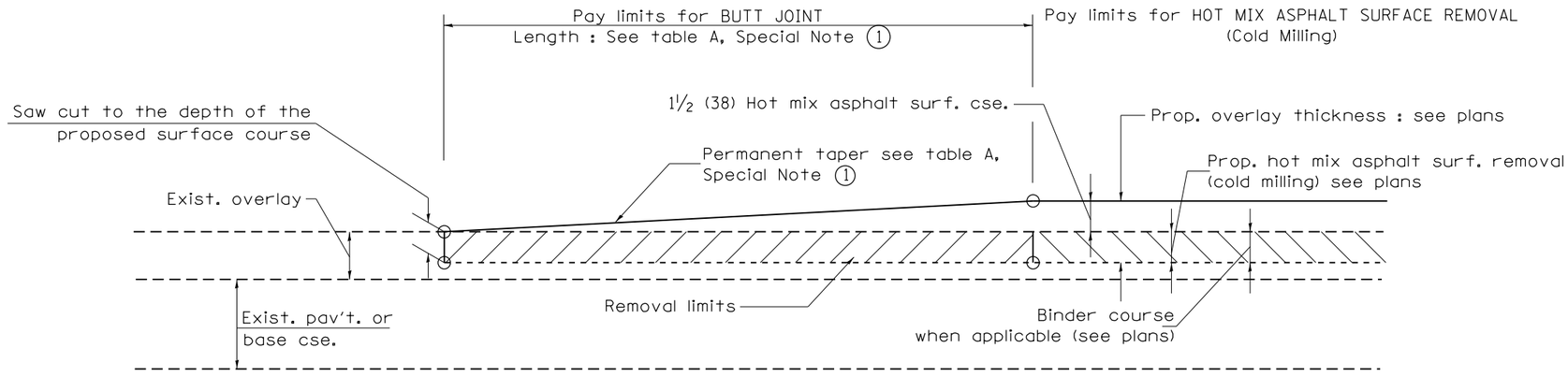

CASE 1 : WITH HOT MIX ASPHALT SURFACE REMOVAL (COLD MILLING)

TABLE A
TAPER RATES

SPECIAL NOTE NUMBER	ELEMENT	MAINLINE INTERSTATES & 4-LANE EXPRESSWAYS	ALL OTHERS
(1)	BUTT JOINT TAPER RATE	1:480	1:240
(2)	TEMPORARY RAMP TAPER RATE	1:80	1:40

GENERAL NOTES

1. The work shall be done in accordance with Article 406.08 and the Special Provision for Butt Joints.
2. The pavement surface to be removed may be either bituminous or P.C. concrete. The work shall be performed in accordance with Article 440.04 and the Special Provisions for Butt Joints.
3. The saw cut joints shall be primed just prior to the placing of bituminous material. The work will be in accordance with the applicable portions of Article 406.05.
4. The length of butt joint is based on the taper rate times change in cold milling depth within the butt joint pay limits, unless otherwise indicated.
5. Temporary ramps are paid for separately and not included in the cost of the butt joints.

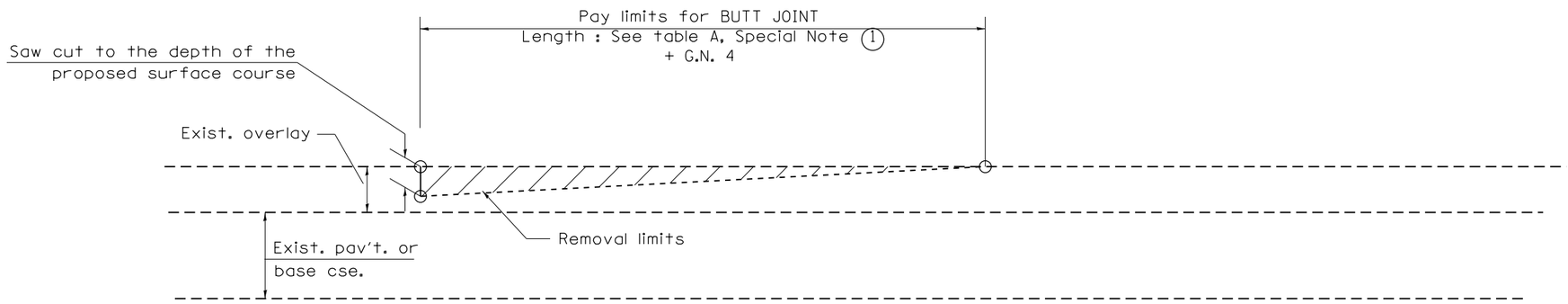

CASE 2 : NO HOT MIX ASPHALT SURFACE REMOVAL (COLD MILLING)

All dimensions are in inches (millimeters) unless otherwise noted.

01-01-97	RENUM. C-23.01, NEW REVISION BOX	T.P.	08-21-13	MAJOR MODIFICATIONS	R.D.
04-01-97	CORRECTION TO DEPTH	J.A.	04-12-16	MINOR CORRECTIONS	R.D.
09-15-05	REVISED DESIGNER NOTE	M.M.A.	02-14-17	ADDED NOTE 5	R.D.
10-16-06	REVISED TO 2007 SPEC.	M.A.	07-16-19	Wording and Spelling corrections	R.D.

STATE OF ILLINOIS
DEPARTMENT OF TRANSPORTATION

NOT TO SCALE

BUTT JOINTS

9

SHT. 1 OF 3
CADD STD. 406101-D4

F.A.P. RTE.	SECTION	COUNTY	TOTAL SHEETS	SHEET NO.
318		PEORIA	180	172
		CONTRACT NO. 68C98		
FED. ROAD DIST. NO.	ILLINOIS	FED. AID PROJECT		

72[(7,7-1,6-1)RS-2(7-2,3)RS]

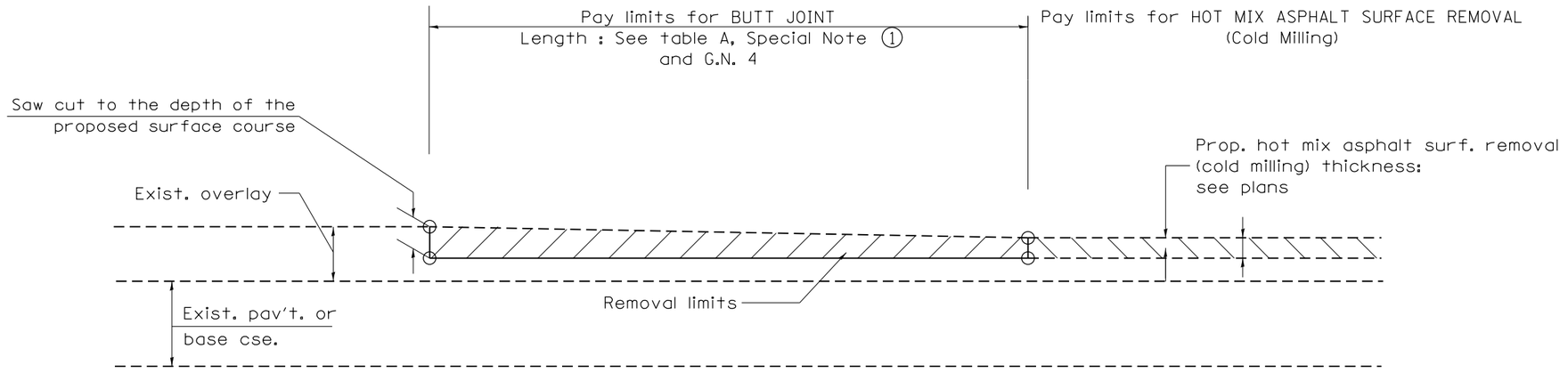

CASE 3 : HOT MIX ASPHALT SURFACE REMOVAL (COLD MILLING)
TIE-IN TO EXISTING BITUMINOUS TAPER

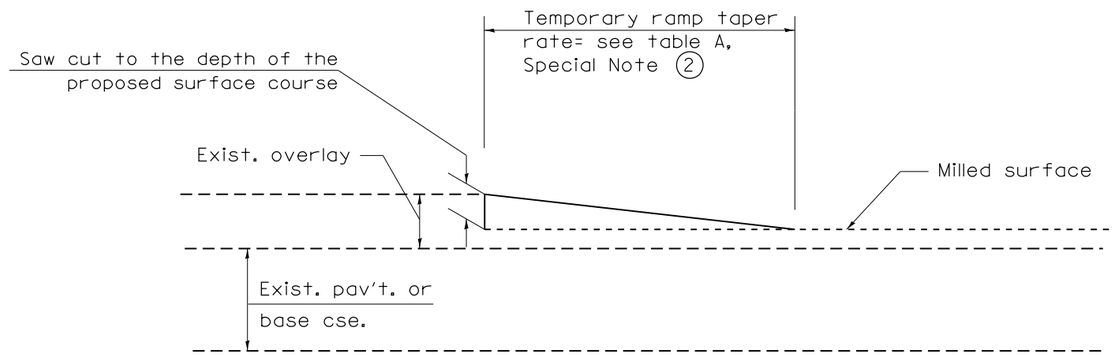

DETAIL TEMPORARY RAMP

All dimensions are in inches (millimeters) unless otherwise noted.

STATE OF ILLINOIS
DEPARTMENT OF TRANSPORTATION

BUTT JOINTS

NOT TO SCALE

9

SHT. 2 OF 3
CADD STD. 406101-D4

F.A.P. RTE.	SECTION	COUNTY	TOTAL SHEETS	SHEET NO.
318		PEORIA	180	173
		CONTRACT NO. 68C98		
FED. ROAD DIST. NO.	ILLINOIS	FED. AID PROJECT		

72[(7,7-1,6-1)RS-2(7-2,3)RS]

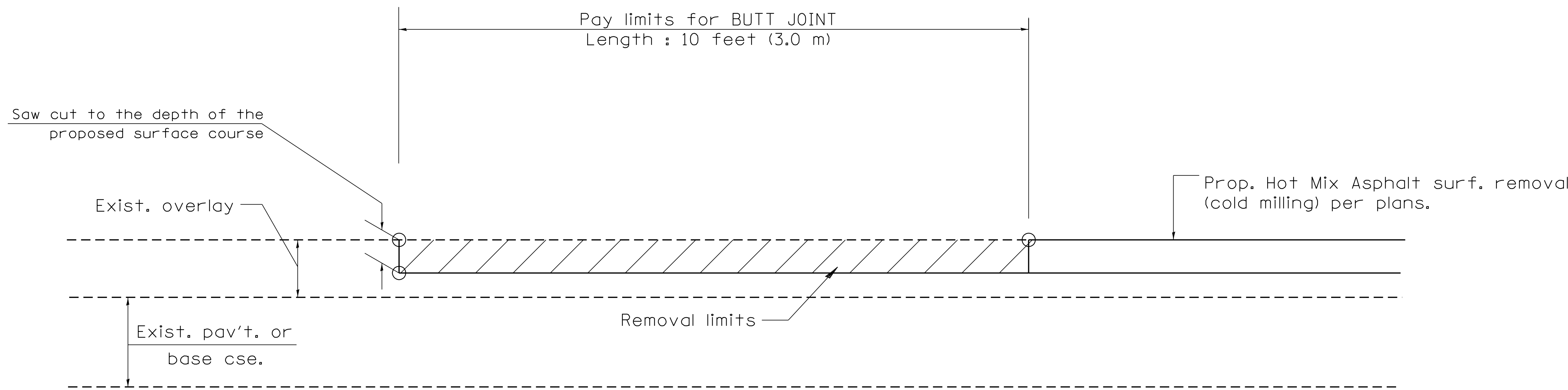

CASE 4 : SINGLE LIFT OVERLAY WITH EQUIVALENT DEPTH
HOT MIX ASPHALT SURFACE REMOVAL (COLD MILLING)
TIE-IN TO EXISTING BITUMINOUS TAPER

All dimensions are in inches (millimeters) unless otherwise noted.

STATE OF ILLINOIS
DEPARTMENT OF TRANSPORTATION

NOT TO SCALE

BUTT JOINTS

9

SHT. 3 OF 3
CADD STD. 406101-D4

F.A.P. RTE.	SECTION	COUNTY	TOTAL SHEETS	SHEET NO.
318		PEORIA	180	174

CONTRACT NO. 68C98

FED. ROAD DIST. NO. | ILLINOIS | FED. AID PROJECT

72[(7,7-1,6-1)RS-2(7-2,3)RS]

DESIGNER NOTES:

1. CONSIDER USING A "B" CURB PAY ITEM AT GUARDRAIL INSTALLATIONS WHERE GRADES ARE EQUAL TO OR GREATER THAN 1% AND AT INLETS. (INCLUDE DISTRICT SPECIAL PROVISION)
2. USE "GUARDRAIL AGGREGATE EROSION CONTROL" AT GUARDRAIL INSTALLATIONS WHERE GRADES ARE LESS THAN 1% (INCLUDE DISTRICT SPECIAL PROVISION).
3. INCLUDE STATE STANDARD 610001, IF APPLICABLE.
4. INCLUDE THE FOLLOWING DISTRICT CADD STANDARDS AS NEEDED: SLOPE DRAINS FOR EXPOSED PIPES; SLOPE DRAINS FOR BURIED PIPES; SEEPAGE COLLARS FOR BURIED PIPES
   SEEPAGE COLLARS FOR EXPOSED PIPES; CONCRETE THRUST BLOCKS AND PIPE ELBOW.
5. INCLUDE DISTRICT SPECIAL PROVISION - "AGGREGATE QUALITY" FOR PROJECTS LOCATED IN THE WESTERN AREA OF THE DISTRICT - APPROX. DIVIDING LINE IS IL 97.
6. DELETE DESIGNER NOTES WHEN INSERTING INTO PLAN FILES.
7. OPERATIONS PREFERS USE OF PIPE OUTLETTING ONTO FORESLOPE WITH RIPRAP. USE NON-METALLIC PIPE WHEN POSSIBLE BECAUSE OF FUTURE CORROSION ISSUES.
8. IF NO OTHER SEEDING IS PAID FOR ON THE CONTRACT, USE DISTRICT SPECIAL PROVISION FOR SEEDING, MINOR AREAS

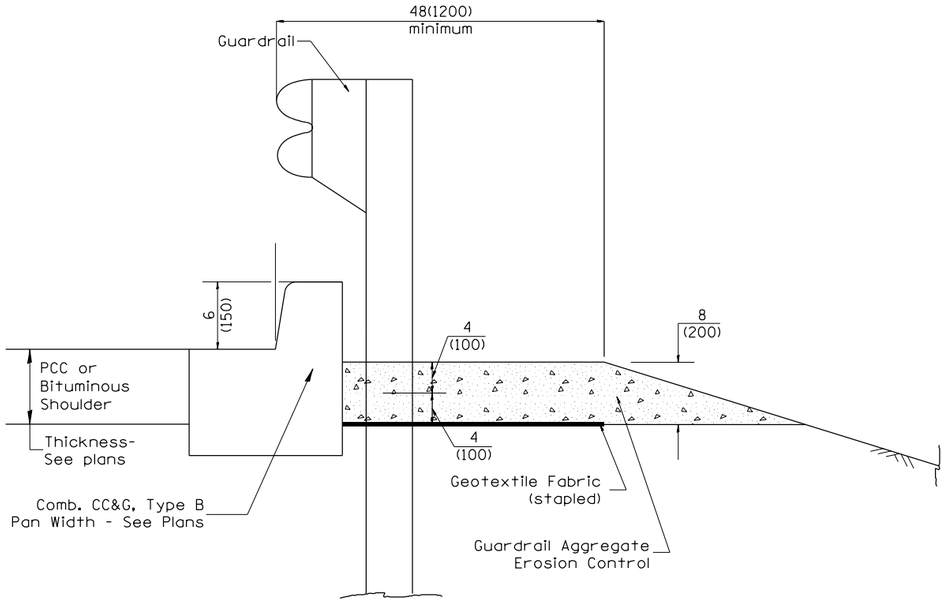

TYPICAL SECTION WITH COMBINATION CONCRETE CURB & GUTTER

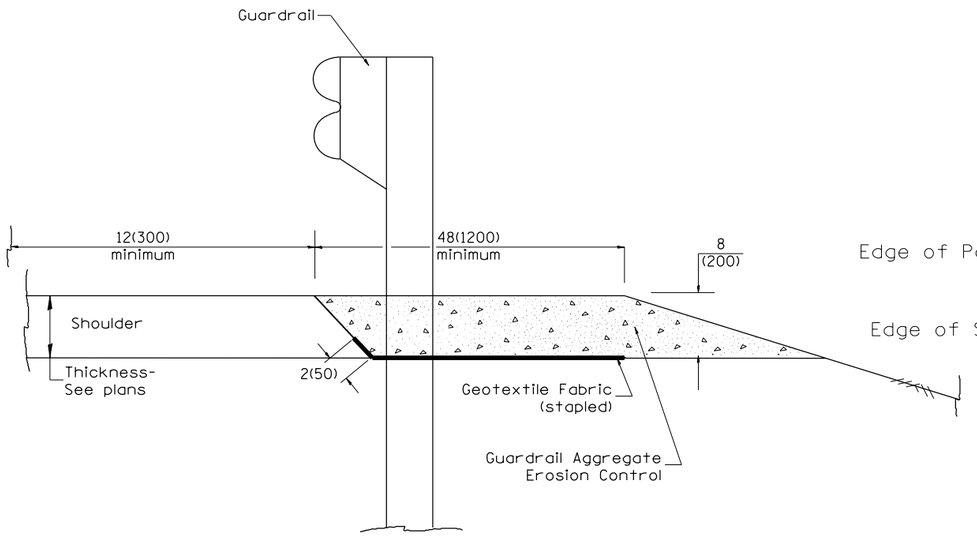

TYPICAL SECTION WITHOUT EROSION CONTROL CURB

GENERAL NOTES: GUARDRAIL AGGREGATE EROSION CONTROL

1. This work shall consist of grading as needed, furnishing and installing geotextile fabric and staples, and furnishing, placing and shaping crushed aggregate around and behind Steel Plate Beam Guardrail posts in accordance with Plan Details.

2. Before placing the aggregate and the Geotextile Fabric, weeds and grass shall be removed from the area to be covered.

3. After the area has been prepared, and in a dry condition, the Geotextile fabric shall be placed with a 12(300) minimum overlap. A knife cut for guardrail post installation is necessary.

4. The aggregate shall be deposited, compacted and shaped by either mechanical or hand methods, in a manner reasonably true to line and grade.

5. The Contractor shall have the option of placing the guardrail before or after the Geotextile Fabric and Aggregate are in place. If the guardrail is placed after the Geotextile Fabric and Aggregate, then any voids must be filled and the aggregate returned to line and grade.

6. Materials shall meet the following requirements:

   A. The crushed aggregate shall be CA1 gradation in accordance with Article 1004.01(c) of the Standard Specifications.

   B. The Geotextile Fabric shall be nonwoven fabric in accordance with Article 1080.02 of the Standard Specifications.

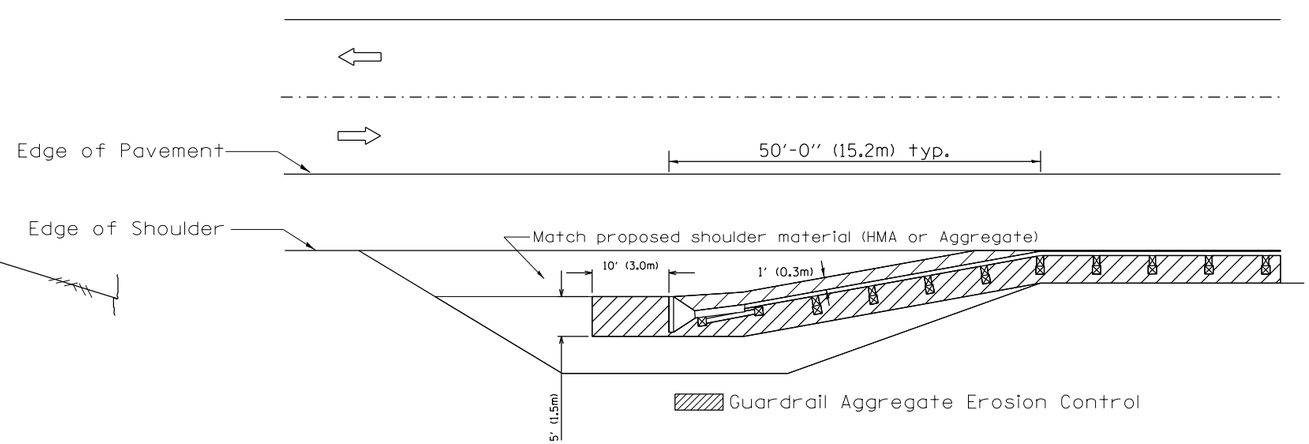

All dimensions are in inches (millimeters) unless otherwise noted.

03-07-11	ADDED DETAIL SHOWING PLAN VIEW	R.D.	5-30-18	CHANGE B CURB TO CC&G	R.D.
08-10-12	REVISED CURB "B" AND AGGREGATE	R.D.	07-16-19	SPELLING CORRECTIONS	R.D.
07-15-15	ADDRESSED SHOULDER INLET CURB	R.D.			
01-26-17	REVISED	R.D.			

STATE OF ILLINOIS
DEPARTMENT OF TRANSPORTATION

GUARDRAIL EROSION CONTROL TREATMENTS

NOT TO SCALE

SHT. 1 OF 2
CADD STD. 630101-D4

F.A.P. RTE.	SECTION	COUNTY	TOTAL SHEETS	SHEET NO.
318		PEORIA	180	175
		CONTRACT NO. 68C98		
FED. ROAD DIST. NO.	ILLINOIS	FED. AID PROJECT		

72[(7,7-1,6-1)RS-2(7-2,3)RS]

DETAIL "A"

#4 reinforcement bars may be cast in PCC apron and precast inlet box or drilled and anchored with an approved chemical adhesive at 2' spacing. Cost of curb and reinforcement are included in the cost of shoulder inlet.

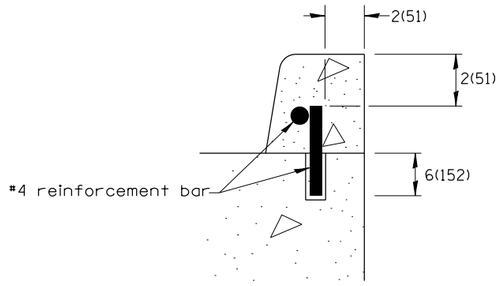

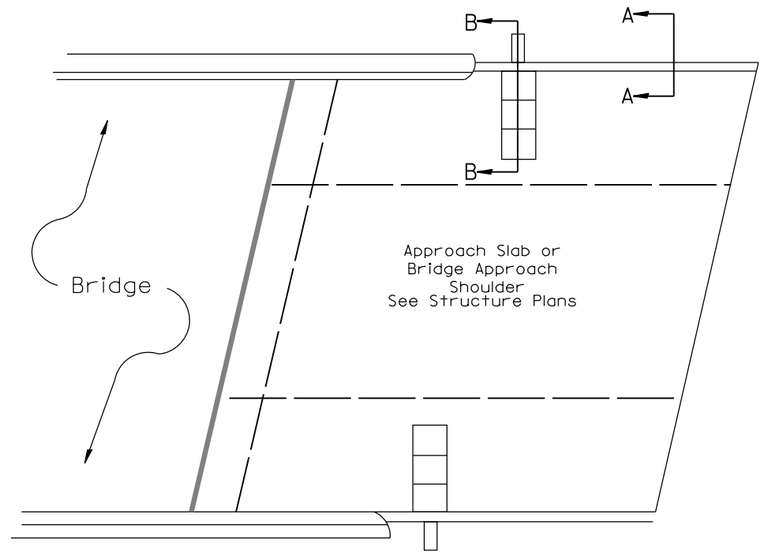

PLAN VIEW

APPROACH SLAB OR SHOULDER PLACEMENT

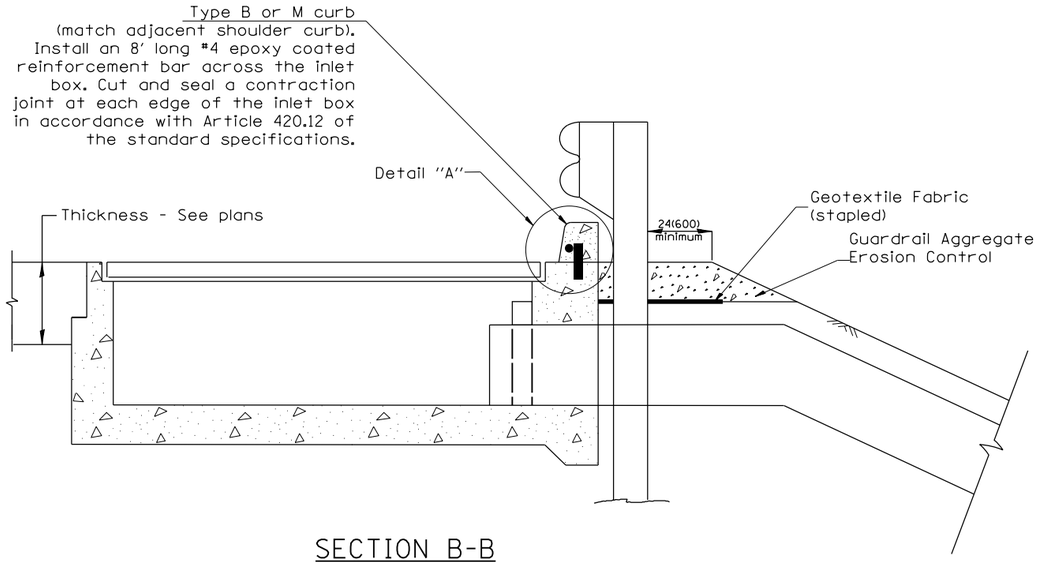

SECTION B-B

TYPICAL SECTION AT INLETS

TYPE E, F & G (HIGHWAY STANDARD 610001)

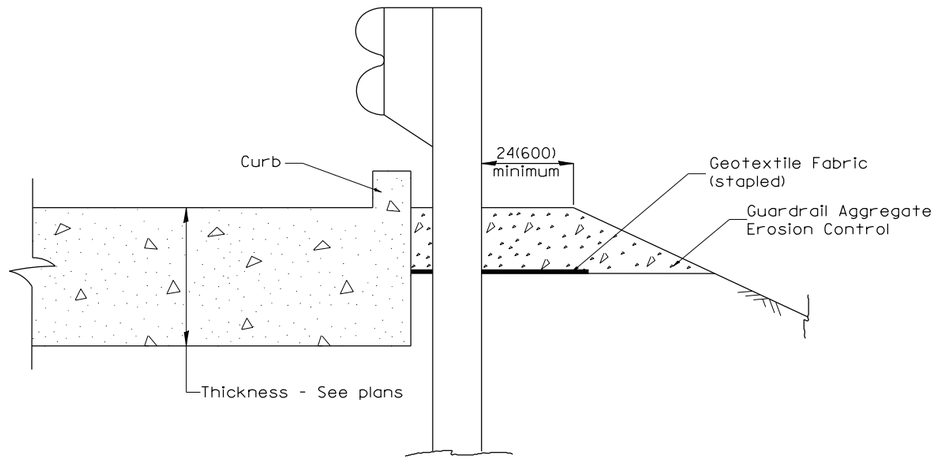

SECTION A-A

TYPICAL SECTION WITH BRIDGE APPROACH CURB

All dimensions are in inches (millimeters) unless otherwise noted.

STATE OF ILLINOIS
DEPARTMENT OF TRANSPORTATION

GUARDRAIL EROSION CONTROL TREATMENTS

NOT TO SCALE

SHT. 2 OF 2
CADD STD. 630101-D4

F.A.P. RTE.	SECTION	COUNTY	TOTAL SHEETS	SHEET NO.
318		PEORIA	180	176
		CONTRACT NO. 68C98		
FED. ROAD DIST. NO.	ILLINOIS	FED. AID PROJECT		

72[(7,7-1,6-1)RS-2(7-2,3)RS]

DESIGNER NOTES:

1. USE DISTRICT SPECIAL PROVISION FOR RECOVERABLE DELINEATORS WHEN USING THIS CADD STANDARD.
2. USE ON INTERSTATE AND EXPRESSWAY FACILITIES.

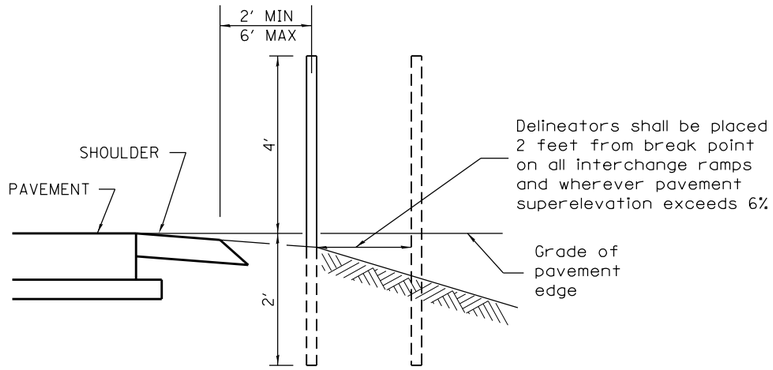

SECTIONAL VIEW

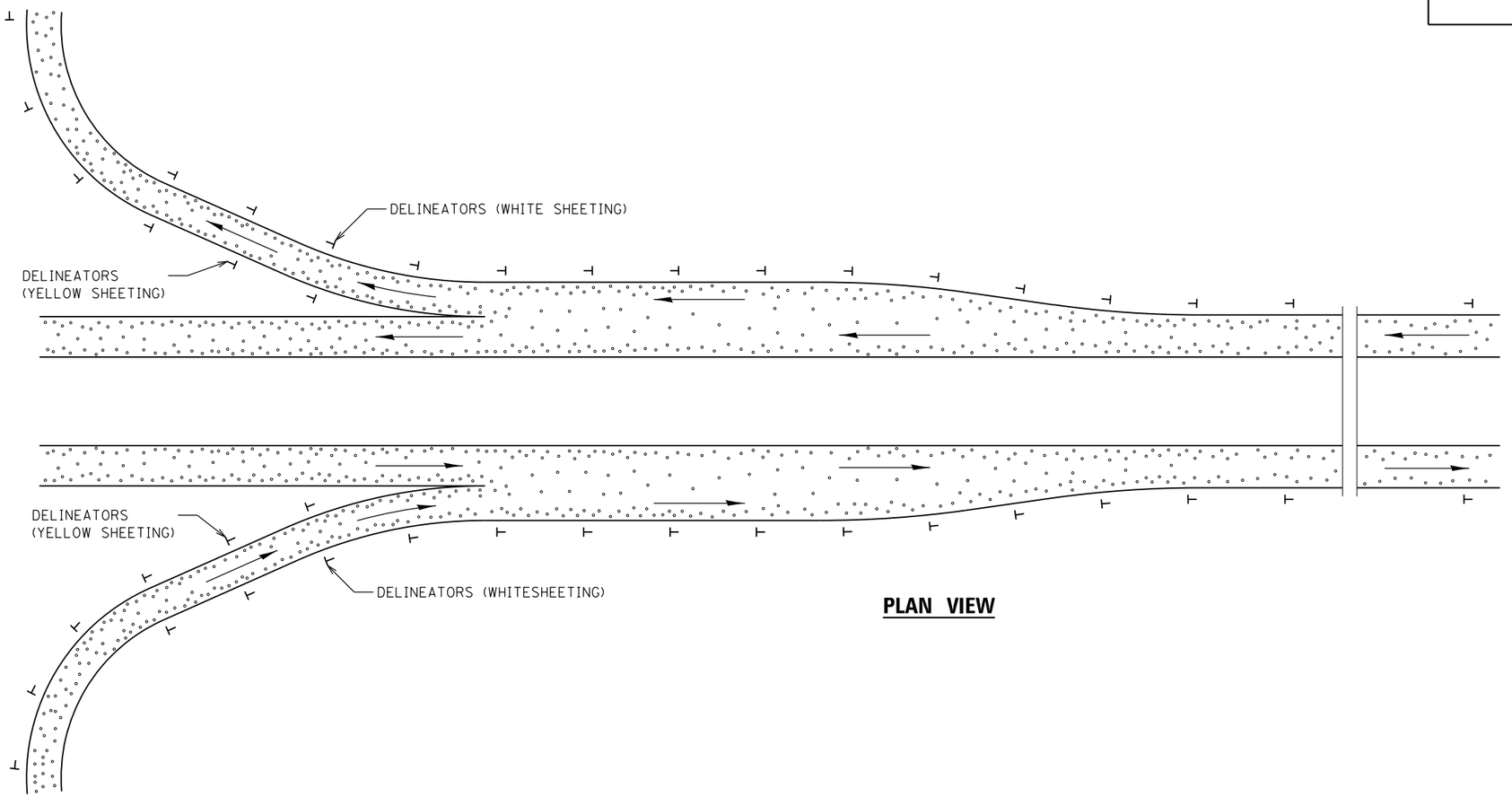

PLAN VIEW

SPACING FOR RECOVERABLEDELINEATORS ON HORIZONTAL CURVES

LOCATION	RADIUS OF CURVE (FEET)	SPACING ON CURVE (FEET)

GENERAL NOTES

Delineators on mainline shall be placed at 400' spacing on tangent sections, and 200' spacing on curved sections.

Delineators on ramps, shall be placed as follows:
1. On tangent sections, acceleration lanes and deceleration lanes at maximum spacing of 100'.
2. On outside of all curved sections.
(See table above for spacing)

08-25-15	NEW STANDARD	R.D.			

STATE OF ILLINOIS
DEPARTMENT OF TRANSPORTATION

RECOVERABLE DELINEATORS DETAIL

NOT TO SCALE

CADD STD. 635002-D4

F.A.P. RTE.	SECTION	COUNTY	TOTAL SHEETS	SHEET NO.
318		PEORIA	180	177
		CONTRACT NO. 68C98		
FED. ROAD DIST. NO.	ILLINOIS	FED. AID PROJECT		

72[(7,7-1,6-1)RS-2(7-2,3)RS]

DETAIL OF INERTIAL BARRIERS
(70 MPH DESIGN – 64' MEDIAN)

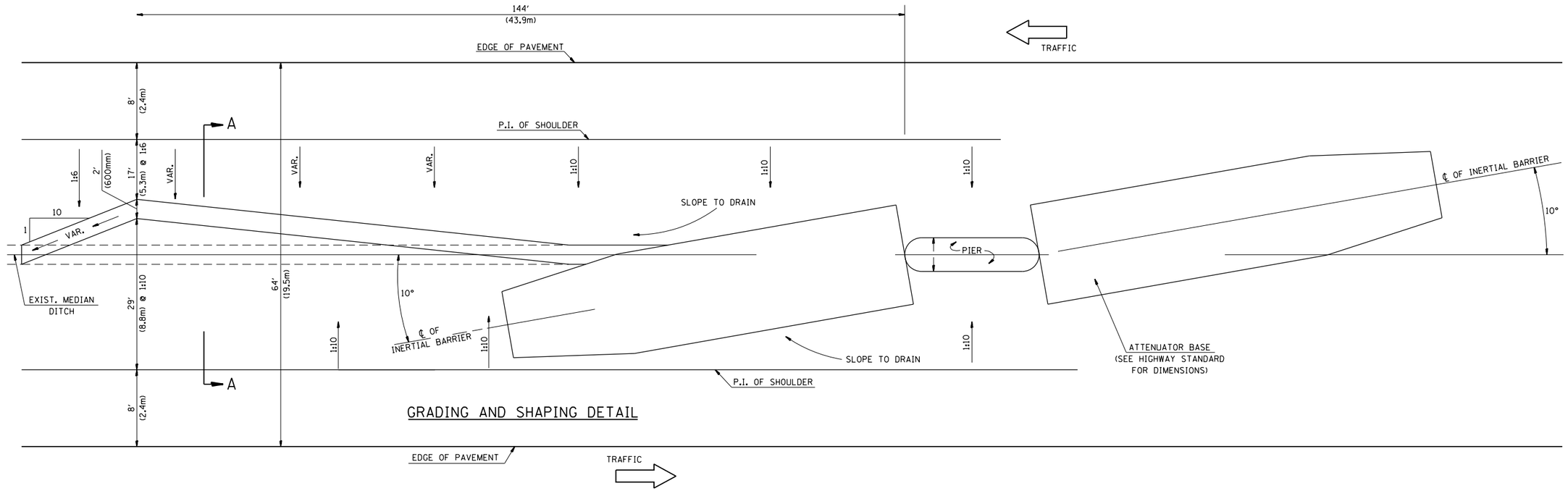

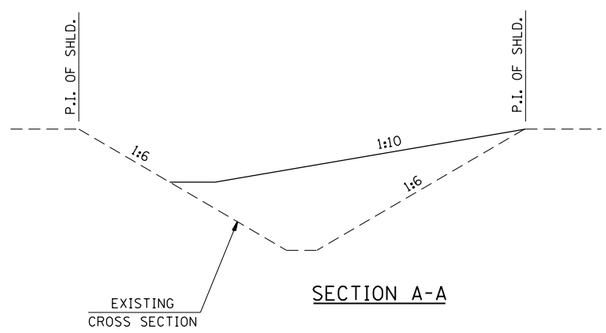

SECTION A-A

GENERAL NOTES

1. ALL 1:10 SLOPES SHOWN ON THIS DETAIL SHALL BE CONSTRUCTED 1:10 OR FLATTER.
2. THE SLOPES AS SHOWN ON THIS DETAIL SHALL APPLY TO BOTH ENDS OF THE BRIDGE PIERS.
3. ATTENUATOR BASE AND BARREL ARRAY SHALL BE INSTALLED IN ACCORDANCE WITH STATE STANDARD 643001 AND MANUFACTURER'S SPECIFICATIONS.
4. IN AREAS OF 1:10 SLOPES PRECEDING THE ATTENUATOR IN THE MEDIAN INSTALLATION, FOUR OR MORE WOOD POSTS SHALL BE PLACED AT 5' (1.5m) INTERVALS IN THE MEDIAN ℄, SEE SPECIAL PROVISIONS AND SCHEDULES.

All slope ratios are expressed as units of vertical displacement to units of horizontal displacement (V:H)

All dimensions are in inches (millimeters) unless otherwise noted.

DESIGNER NOTES:
1. Include BDE Special Provision "Impact Attenuators"
2. Contact the Bridge Office about crash wall details if it needs to be raised.
3. Designer should review Median Drainage.
4. Verify Dist. STD No. for Design Speed & Median Width.

01-01-97	RENUM. F-3.02a, NEW REVISION BOX, REVISED	T.P.	03-15-12	REMOVED BARRELS	R.D.
	TITLE BOX, REVISED NOTES		08-25-15	REVISED BASE DIMENSIONS	R.D.
08-02	REVISED	M.A.			
10-16-06	REVISED TO 2007 SPEC.	M.A.			

STATE OF ILLINOIS
DEPARTMENT OF TRANSPORTATION

MEDIAN SAND MODULE IMPACT ATTENUATOR
64' MEDIAN

NOT TO SCALE — CADD STD. 650004-D4

F.A.P. RTE.	SECTION	COUNTY	TOTAL SHEETS	SHEET NO.
318		PEORIA	180	178
		CONTRACT NO. 68C98		
FED. ROAD DIST. NO.	ILLINOIS	FED. AID PROJECT		

72[(7,7-1,6-1)RS-2(7-2,3)RS]

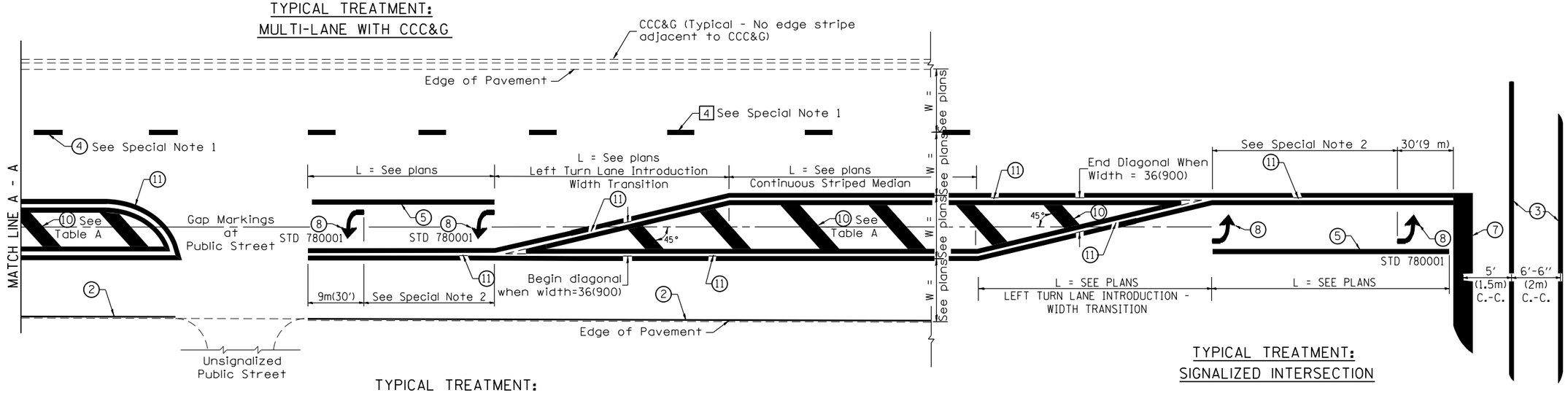

TYPICAL MEDIAN TRANSITIONS

FLUSH PAVED MEDIAN: RESTRICTED LEFT TURN LANE

TABLE A

RECOMMENDED SPACING BETWEEN DIAGONAL LINES

SPEED LIMIT RANGE	CONTINUOUS	INTERSECTION CHANNELIZATION (Includes Width Transitions for Median and Left Turn Lane Introductions)
Less Than 30 mph (50 km/h)	50' (15m)	15' (5m)
30 - 45 mph (50 - 70 km/h)	75' (23m)	20' (6m)
Over 45 mph (70 km/h)	150' (46m)	30' (9m)

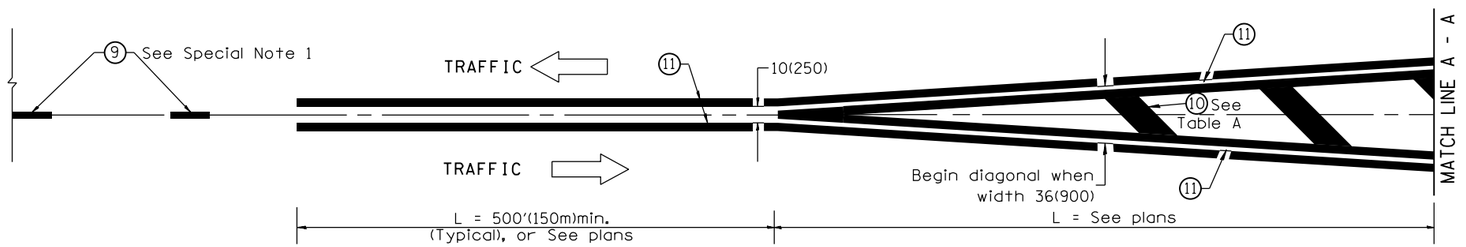

MEDIAN INTRODUCTION - WIDTH TRANSITIONS

All dimensions are in inches (millimeters) unless otherwise noted.

STATE OF ILLINOIS
DEPARTMENT OF TRANSPORTATION

TYPICAL PAVEMENT MARKINGS

NOT TO SCALE

SHT. 2 OF 2
CADD STD. 780001-D4

F.A.P. RTE.	SECTION	COUNTY	TOTAL SHEETS	SHEET NO.
318		PEORIA	180	179
		CONTRACT NO. 68C98		
FED. ROAD DIST. NO.	ILLINOIS	FED. AID PROJECT		

72[(7,7-1,6-1)RS-2(7-2,3)RS]

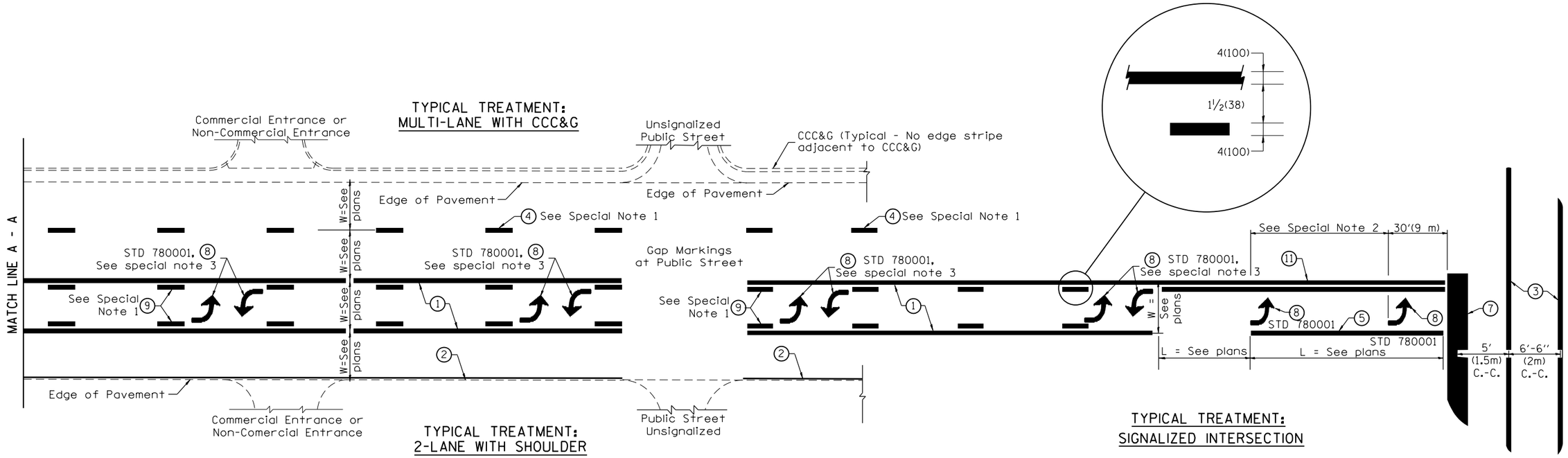

FLUSH PAVED MEDIAN: TWO-WAY LEFT TURN LANE WITH ONE-WAY LEFT TURN LANE AT SIGNALIZED INTERSECTION

TYPICAL PAVEMENT MARKING LEGEND

(Note: This is a District Standard Legend.
Some elements may not apply to specific project.)

1. 4(100) Solid (Yellow)
2. 4(100) Solid (White)
3. 2-6(150) Crosswalk @ 6'-6" (2m)min C.-C. (White)
   2-8(200) Crosswalk @ 6'-6" (2m)min C.-C. (White) (When traffic signals are present.)
4. 6(150) Skip-Dash (White) — 10' (3.05m) / 30' (9.14m) / 10' (3.05m) (See Special Note 1)
5. 8(200) Solid (White)
6. 12(300) Diagonal (White) (Item 6 is shown on Std. 780001)
7. 24(600) Stop Bar (White)
8. Letters & Arrows — 33' (10m) (See Std. 780001 and Special Notes 2 & 3)
9. 4(100) Skip-Dash (Yellow) — 10' (3.05m) / 30' (9.14m) / 10' (3.05m) (See Special Note 1)
10. 12(300) Diagonal (Yellow) (See Table A) — 45°
11. 4(100) Double Solid (Yellow) — 11(280) C.-C. — See Table A

SPECIAL NOTES

1. Skip-Dash markings will be centered between both ends of city blocks and shall be placed in alignment transversely across the pavement.
2. The following shall apply to arrows located in one-way left turn lanes:
   A. A minimum of two (2) arrows is required.
   B. The maximum spacing between arrows is 80' (24 m).
   C. Arrows shall be evenly spaced if three (3) or more are required.
3. The following shall apply to arrow pairs located in two-way left turn lanes:
   A. A minimum of two (2) arrow pairs is required.
   B. The maximum spacing between arrow pairs is 200' (61 m).
   C. Arrow pairs shall be evenly spaced if three (3) or more are required.
   D. The spacing between Bi Directional Left Turn Arrows is 33' (10 m).

GENERAL NOTES

1. Refer to State Standard 780001 for additional Pavement Markings including letters & arrows.
2. See Plans for Pavement Markings adjacent to curbed islands and medians, and through lane reductions.
3. Refer to Article 780.13 for letter, number and symbol areas (sq. ft.)
4. Areas are grooved 1" beyond each edge for the following symbols:
   Through Arrow= 14.8 sq. ft.
   Large Left or Right Arrow= 21.9 sq. ft.
   2 Arrow Combination Left (or Right) and Through= 34.9 sq. ft.
   Wrong Way Arrow= 29.5 sq. ft.
   Railroad Crossing Symbol= 69.8 sq. ft.
   (For further information, refer to BDE Special Provision: Grooving for Recessed Pavement Markings)

DESIGNER NOTES:
1. Include State Standard 780001 (Typical Pavement Markings)

01-01-97	RENUM. F-8.03, NEW REVISION BOX	T.P.	10-16-06	REVISED TO 2007 SPEC.		
02-07-97	ADD BI DIRECTIONAL DIMENSION	J.A.	2/29/16	ADDED GROOVING AREAS	R.D.	
10-97	CORRECT BI DIRECTIONAL DIMENSION	J.A.	07-16-19	SPELLING CORRECTIONS	R.D.	
08-02	ADD CROSSWALK DMNS. WITH T.S.	M.A.				

STATE OF ILLINOIS
DEPARTMENT OF TRANSPORTATION

TYPICAL PAVEMENT MARKINGS
NOT TO SCALE
SHT. 1 OF 2
CADD STD. 780001-D4

F.A.P. RTE.	SECTION	COUNTY	TOTAL SHEETS	SHEET NO.
318		PEORIA	180	180
		CONTRACT NO. 68C98		
FED. ROAD DIST. NO.	ILLINOIS	FED. AID PROJECT		

72[(7,7-1,6-1)RS-2(7-2,3)RS]