CONTROLLER SEQUENCE

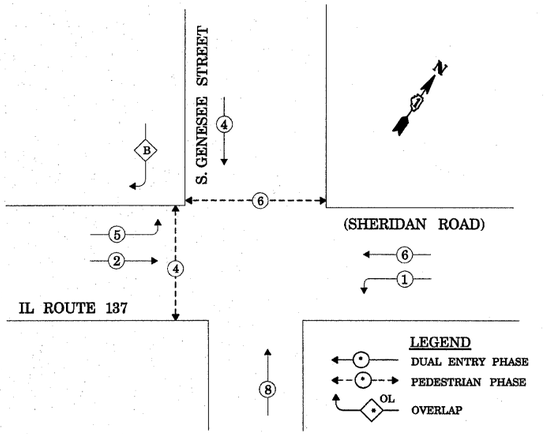

PHASE DESIGNATION DIAGRAM

EMERGENCY VEHICLE PREEMPTION SEQUENCE

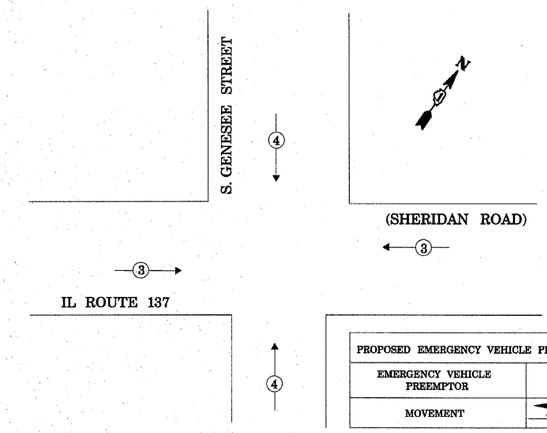

PROPOSED EMERGENCY VEHICLE PREEMPTORS		
EMERGENCY VEHICLE PREEMPTOR	3	4
MOVEMENT		

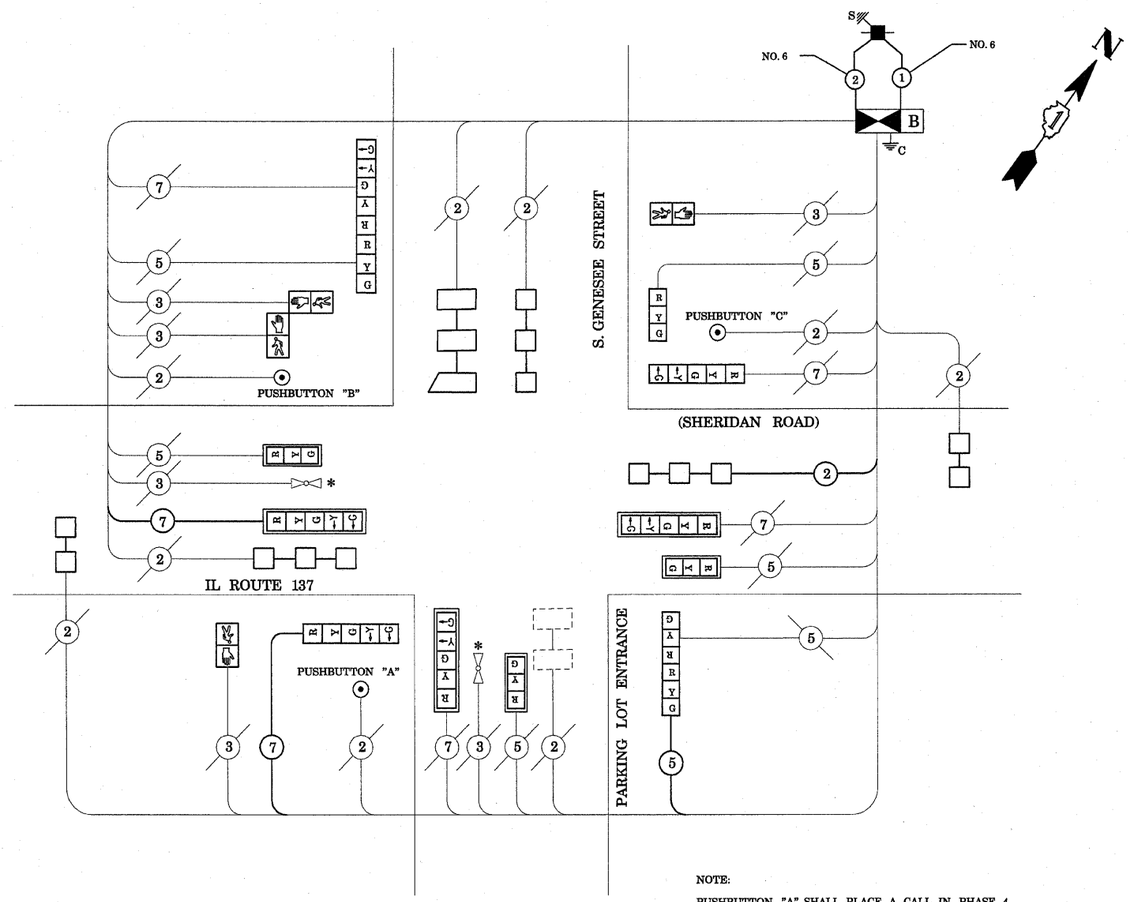

CABLE PLAN

NOTE:

PUSHBUTTON "A" SHALL PLACE A CALL IN PHASE 4
PUSHBUTTON "B" SHALL PLACE A CALL IN PHASES 4 AND 6
PUSHBUTTON "C" SHALL PLACE A CALL IN PHASE 6

CABLE PLAN LEGEND

PROPOSED	EXISTING	
G	G	8" (200mm) TRAFFIC SIGNAL SECTION
R	R	12" (300mm) TRAFFIC SIGNAL SECTION
W	W	12" (300mm) PEDESTRIAN SIGNAL SECTION
		12"(300mm) PEDESTRIAN SIGNAL SECTION
		CONTROLLER CABINET
		SERVICE INSTALLATON
T	T	TELEPHONE CONNECTION
		MAGNETIC DETECTOR
		PUSHBUTTON DECTECTOR
		VEHICLE DETECTOR, INDUCTION LOOP
2	2	DENOTES NUMBER OF CONDUCTORS. ALL CABLE NO. 14 EXCEPT AS INDICATED. ALL LOOP DETECTOR CABLE TO BE SHIELDED.
R Y G Y G "P"	R Y G Y G "P"	SIGNAL FACE WITH BACKPLATE. "P" INDICATES PROGRAMMED HEAD
	"E"	RAILROAD CONTROL CABINET
	"E"	ILLUMINATED SIGN, FIBER OPTIC "NO LEFT TURN"
	"E"	ILLUMINATE SIGN, FIBER OPTIC "NO RIGHT TURN"
H/C	H/C	GROUND ROD AT HANDHOLE, DOUBLE HANDHOLE, OR CONTROLLER
P	P	GROUND ROD AT POST OR MAST ARM POLE
S	S	GROUND ROD AT ELECTRIC SERVICE INSTALLATION
1	1	GROUND CABLE IN CONDUIT NO. 6 SOLID COPPER (GREEN)
24	24	FIBER OPTIC CABLE IN CONDUIT NO.62.5/125 2-MM12F & SM12F
		MICROWAVE VEHICLE SENSOR
V	V	VIDEO DETECTOR
C	C	CLOSED CIRCUIT TV
		EMERGENCY VEHICLE LIGHT DETECTOR
		CONFIRMATION BEACON
B	B	UNINTERRUPTABLE POWER SUPPLY

SCHEDULE OF QUANTITIES

QUANTITIES	UNIT	ITEM
15	SQFT	SIGN PANEL-TYPE II
22	FOOT	CONDUIT IN TRENCH, 2" DIA., GALVANIZED STEEL
39	FOOT	CONDUIT PUSHED, 2" DIA., GALVANIZED STEEL
1	EACH	HEAVY-DUTY HANDHOLE
22	FOOT	TRENCH AND BACKFILL FOR ELECTRICAL WORK
1	EACH	MAINTENANCE OF EXISTING TRAFFIC SIGNAL INSTALLATION
1	EACH	FULL ACTUATED CONTROLLER AND TYPE IV CABINET, SPECIAL
171	FOOT	ELECTRIC CABLE IN CONDUIT, SIGNAL NO. 14 5C
439	FOOT	ELECTRIC CABLE IN CONDUIT, SIGNAL NO. 14 7C
90	FOOT	ELECTRIC CABLE IN CONDUIT, LEAD-IN, NO. 14 1 PAIR
114	FOOT	ELECTRIC CABLE IN CONDUIT, SERVICE NO.6 2C
1	EACH	DRILL EXISTING HANDHOLE
6	EACH	TRAFFIC SIGNAL BACKPLATE, LOUVERED, ALUMINUM
1	EACH	INDUCTIVE LOOP DETECTOR
1	EACH	TRAFFIC SIGNAL POST, GALVANIZED STEEL 16 FT
510	FOOT	DETECTOR LOOP, TYPE I
3	EACH	PEDESTRIAN PUSH-BUTTON
1	EACH	* RELOCATE EXISTING EMERGENCY VEHICLE PRIORITY SYSTEM, PHASING UNIT
439	FOOT	REMOVE ELECTRIC CABLE FROM CONDUIT
1	EACH	REMOVE EXISTING TRAFFIC SIGNAL EQUIPMENT
3	EACH	SIGNAL HEAD, L.E.D., 1-FACE, 3-SECTION, MASTARM MOUNTED
1	EACH	SIGNAL HEAD, L.E.D., 1-FACE, 3-SECTION, BRACKET MOUNTED
2	EACH	SIGNAL HEAD, L.E.D., 1-FACE, 5-SECTION, BRACKET MOUNTED
3	EACH	SIGNAL HEAD, L.E.D., 1-FACE, 5-SECTION, MAST ARM MOUNTED
1	EACH	SIGNAL HEAD, L.E.D., 2-FACE, 3-SECTION, BRACKET MOUNTED
1	EACH	SIGNAL HEAD, L.E.D., 2-FACE, 1-3 SECTION, 1-5 SECTION, BRACKET MOUNTED
2	EACH	PEDESTRIAN SIGNAL HEAD, L.E.D., 1-FACE, BRACKET MOUNTED
1	EACH	PEDESTRIAN SIGNAL HEAD, L.E.D., 2-FACE, BRACKET MOUNTED
1	EACH	SERVICE INSTALLATION, GROUND MOUNT
1	EACH	UNINTERRUPTABLE POWER SUPPLY (UPS)

* 100% COST TO THE VILLAGE OF WAUKEGAN

I.D.O.T.
TRAFFIC SIGNAL INSTALLATION
ELECTRICAL SERVICE REQUIREMENTS

TYPE	NO. LAMPS	X WATTAGE INCAND.	X WATTAGE LED	X % OPERATION	TOTAL WATTAGE
SIGNAL (RED)	13	135	17	0.50	110.50
(YELLOW)	13	135	25	0.25	81.25
(GREEN)	13	135	15	0.25	48.75
ARROW	12	135	12	0.10	14.40
PED. SIGNAL	4	90	25	1.00	100.00
CONTROLLER	1	100	100	1.00	100.00
ILLUM. SIGN		84		0.05	–
FLASHER				0.05	–
ENERGY COSTS TO: CITY OF WAUKEGAN				TOTAL=	454.90

ENERGY SUPPLY CONTACT: MR. TARNCY BUCHANAN
PHONE: (630)816-5365
COMPANY: PATRICK ENGINEERING

FILE NAME = c:\projects\traffic\t070022\168eforestwy.dgn	USER NAME = kanthaphixayba	DESIGNED - N.B.	REVISED -
		DRAWN - N.B.	REVISED -
	PLOT SCALE = 20.0000 ' / IN.	CHECKED - D.B.	REVISED -
	PLOT DATE = 12/28/2007	DATE - 12/28/2007	REVISED -

STATE OF ILLINOIS
DEPARTMENT OF TRANSPORTATION

CABLE PLAN, SCHEDULE OF QUANTITIES,
PHASE DESIGNATION DIAGRAM
IL ROUTE 137 (SHERIDAN ROAD) AT S. GENESEE STREET

SCALE: NTS | SHEET NO. OF SHEETS | STA. TO STA.

F.A.P. RTE.	SECTION	COUNTY	TOTAL SHEETS	SHEET NO.
352	D-RD-5	LAKE	30	1D
		CONTRACT NO. 60D54		

FED. ROAD DIST. NO. | ILLINOIS | FED. AID PROJECT

: 12:23:07 12/28/2007