CONTROLLER SEQUENCE

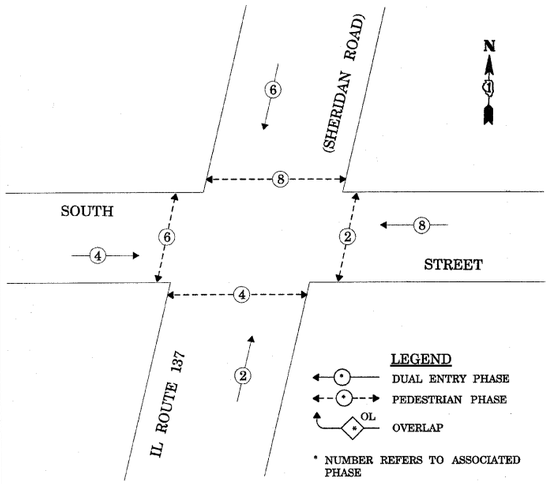

PHASE DESIGNATION DIAGRAM

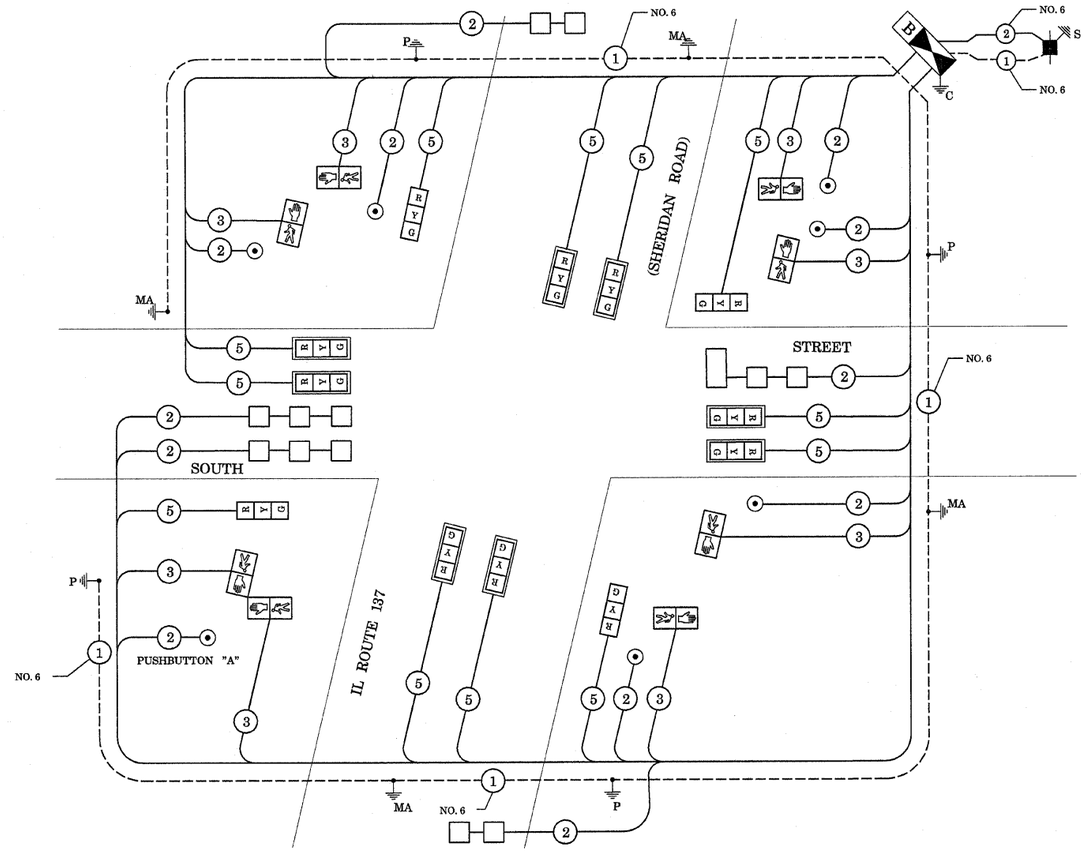

CABLE PLAN

NOTE:

PUSHBUTTON "A" SHALL PLACE A CALL IN PHASES 4 AND 6

CABLE PLAN LEGEND

PROPOSED	EXISTING	
G	G	8" (200mm) TRAFFIC SIGNAL SECTION
R	R	12" (300mm) TRAFFIC SIGNAL SECTION
W	W	12" (300mm) PEDESTRIAN SIGNAL SECTION
		12"(300mm) PEDESTRIAN SIGNAL SECTION
		CONTROLLER CABINET
		SERVICE INSTALLATON
T	T	TELEPHONE CONNECTION
		MAGNETIC DETECTOR
		PUSHBUTTON DECTECTOR
		VEHICLE DETECTOR, INDUCTION LOOP
2	2	DENOTES NUMBER OF CONDUCTORS. ALL CABLE NO. 14 EXCEPT AS INDICATED. ALL LOOP DETECTOR CABLE TO BE SHIELDED.
R Y G Y G "P"	R Y G G G "P"	SIGNAL FACE WITH BACKPLATE. "P" INDICATES PROGRAMMED HEAD
	"E"	RAILROAD CONTROL CABINET
	"E"	ILLUMINATED SIGN, FIBER OPTIC "NO LEFT TURN"
	"E"	ILLUMINATE SIGN, FIBER OPTIC "NO RIGHT TURN"
H/C	H/C	GROUND ROD AT HANDHOLE, DOUBLE HANDHOLE, OR CONTROLLER
P	P	GROUND ROD AT POST OR MAST ARM POLE
S	S	GROUND ROD AT ELECTRIC SERVICE INSTALLATION
1	1	GROUND CABLE IN CONDUIT NO. 6 SOLID COPPER (GREEN)
24	24	FIBER OPTIC CABLE IN CONDUIT NO.62.5125 2-MM12F & SM12F
		MICROWAVE VEHICLE SENSOR
V	V	VIDEO DETECTOR
C	C	CLOSED CIRCUIT TV
		EMERGENCY VEHICLE LIGHT DETECTOR
		CONFIRMATION BEACON
B		UNINTERRUPTABLE POWER SUPPLY

SCHEDULE OF QUANTITIES

QUANTITIES	UNIT	ITEM
400	SQ FT	PORTLAND CEMENT CONCRETE SIDEWALK 5 INCH
408	SQ FT	SIDEWALK REMOVAL
13.5	SQFT	SIGN PANEL-TYPE I
30	SQFT	SIGN PANEL-TYPE II
444	FOOT	CONDUIT IN TRENCH, 2" DIA., GALVANIZED STEEL
12	FOOT	CONDUIT IN TRENCH, 2 1/2" DIA., GALVANIZED STEEL
38	FOOT	CONDUIT IN TRENCH, 4" DIA., GALVANIZED STEEL
28	FOOT	CONDUIT PUSHED, 1"" DIA., GALVANIZED STEEL
136	FOOT	CONDUIT PUSHED, 2" DIA., GALVANIZED STEEL
79	FOOT	CONDUIT PUSHED, 3" DIA., GALVANIZED STEEL
83	FOOT	CONDUIT PUSHED, 4" DIA., GALVANIZED STEEL
43	FOOT	CONDUIT PUSHED, 5" DIA., GALVANIZED STEEL
7	EACH	HANDHOLE
1	EACH	HEAVY-DUTY HANDHOLE
1	EACH	DOUBLE HANDHOLE
500	FOOT	TRENCH AND BACKFILL FOR ELECTRICAL WORK
1	EACH	FULL ACTUATED CONTROLLER AND TYPE IV CABINET, SPECIAL
1004	FOOT	ELECTRIC CABLE IN CONDUIT, SIGNAL NO. 14 2C
1076	FOOT	ELECTRIC CABLE IN CONDUIT, SIGNAL NO. 14 3C
1783	FOOT	ELECTRIC CABLE IN CONDUIT, SIGNAL NO. 14 5C
1203	FOOT	ELECTRIC CABLE IN CONDUIT, LEAD-IN, NO. 14 1 PAIR
26	FOOT	ELECTRIC CABLE IN CONDUIT, SERVICE NO.6 2C

QUANTITIES	UNIT	ITEM
361	FOOT	ELECTRIC CABLE IN CONDUIT, GROUNDING, NO. 6 1C
4	EACH	TRAFFIC SIGNAL POST, GALVANIZED STEEL 14 FT.
2	EACH	STEEL MAST ARM ASSEMBLY AND POLE, 20 FT.
2	EACH	STEEL MAST ARM ASSEMBLY AND POLE, 24 FT.
8	FOOT	CONCRETE FOUNDATION, TYPE A
4	FOOT	CONCRETE FOUNDATION, TYPE C
60	FOOT	CONCRETE FOUNDATION, TYPE E 30" DIAMETER
8	EACH	TRAFFIC SIGNAL BACKPLATE, LOUVERED, ALUMINUM
5	EACH	INDUCTIVE LOOP DETECTOR
397	FOOT	DETECTOR LOOP, TYPE I
7	EACH	PEDESTRIAN PUSH-BUTTON
1	EACH	TEMPORARY TRAFFIC SIGNAL INSTALLATION
1	EACH	REMOVE EXISTING TRAFFIC SIGNAL EQUIPMENT
3	EACH	REMOVE EXISTING HANDHOLE
6	EACH	REMOVE EXISTING CONCRETE FOUNDATION
8	EACH	SIGNAL HEAD, L.E.D., 1-FACE, 3-SECTION, MASTARM MOUNTED
5	EACH	SIGNAL HEAD, L.E.D., 1-FACE, 3-SECTION, BRACKET MOUNTED
6	EACH	PEDESTRIAN SIGNAL HEAD, L.E.D., 1-FACE, BRACKET MOUNTED
1	EACH	PEDESTRIAN SIGNAL HEAD, L.E.D., 2-FACE, BRACKET MOUNTED
1	EACH	SERVICE INSTALLATION, POLE MOUNT
1	EACH	UNINTERRUPTABLE POWER SUPPLY (UPS)

I.D.O.T.
TRAFFIC SIGNAL INSTALLATION
ELECTRICAL SERVICE REQUIREMENTS

TYPE	NO. LAMPS	X WATTAGE INCAND.	X WATTAGE LED	X % OPERATION	TOTAL WATTAGE
SIGNAL (RED)	12	135	17	0.50	102.00
(YELLOW)	12	135	25	0.25	75.00
(GREEN)	12	135	15	0.25	45.00
ARROW		135	12	0.10	–
PED. SIGNAL	8	90	25	1.00	200.00
CONTROLLER	1	100	100	1.00	100.00
ILLUM. SIGN		84		0.05	–
					–
FLASHER				0.05	
				TOTAL=	522.00

ENERGY COSTS TO: CITY OF WAUKEGAN

ENERGY SUPPLY CONTACT: MR. TARNCY BUCHANAN
PHONE: (630)816-5365
COMPANY: PATRICK ENGINEERING

FILE NAME = c:\projects\traffic\t070022\168Oforestway.dgn	USER NAME = kanthaphixaybo	DESIGNED - N.B.	REVISED -
		DRAWN - N.B.	REVISED -
	PLOT SCALE = 20.0000 ' / IN.	CHECKED - D.B.	REVISED -
	PLOT DATE = 12/28/2007	DATE - 12/28/2007	REVISED -

STATE OF ILLINOIS
DEPARTMENT OF TRANSPORTATION

CABLE PLAN, SCHEDULE OF QUANTITIES,
PHASE DESIGNATION DIAGRAM
IL ROUTE 137 (SHERIDAN ROAD) AT SOUTH STREET

SCALE: NTS | SHEET NO. OF SHEETS | STA. TO STA.

F.A.P. RTE.	SECTION	COUNTY	TOTAL SHEETS	SHEET NO.
352	D-RD-5	LAKE	30	14
		CONTRACT NO. 60D54		

FED. ROAD DIST. NO. | ILLINOIS | FED. AID PROJECT