CONTRACT NO. 62032

F.A.P. RTE.	SECTION	COUNTY	TOTAL SHEETS	SHEET NO.
330	1Y-B-R-1	LAKE	121	8
STA.		TO STA.		
FED. ROAD DIST. NO.		ILLINOIS	FED. AID PROJECT	

US 45/IL 21

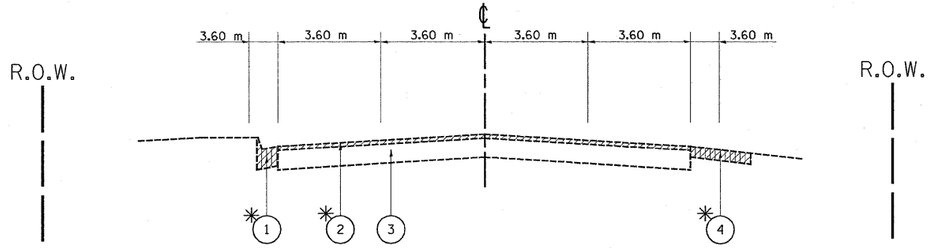

EXISTING TYPICAL CROSS SECTION
(LOOKING NORTH)
STA. 9+109.4 TO STA. 10+381

US 45/IL 21

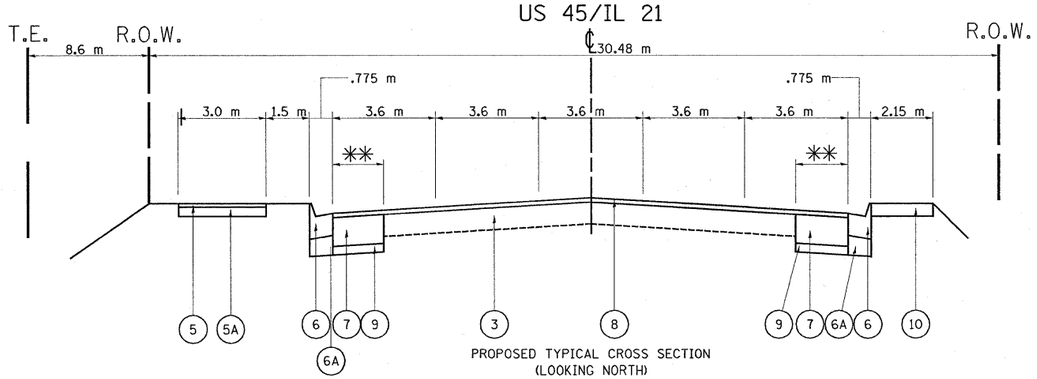

PROPOSED TYPICAL CROSS SECTION
(LOOKING NORTH)
STA. 10+109.4 TO STA. 10+155.3

US 45/IL 21

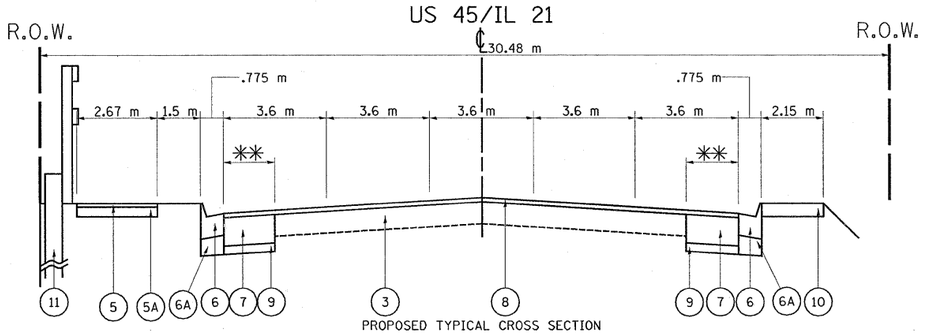

PROPOSED TYPICAL CROSS SECTION
(LOOKING NORTH)
STA. 10+155.3 TO STA. 10+285
STA. 10+295 TO STA. 10+340
STA. 10+350 TO STA. 10+381

US 45/IL 21

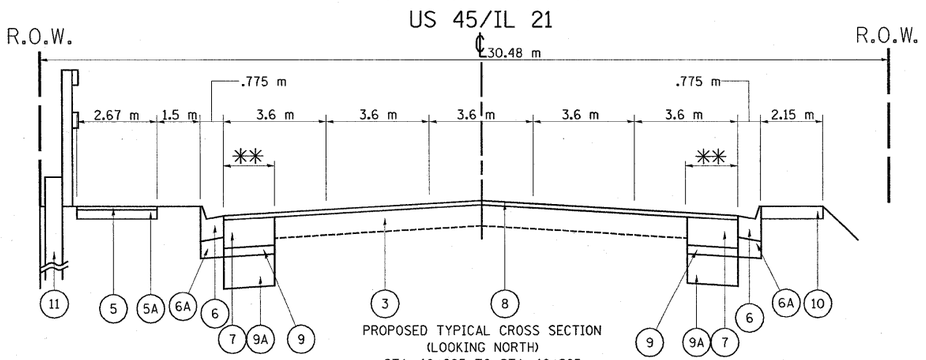

PROPOSED TYPICAL CROSS SECTION
(LOOKING NORTH)
STA. 10+285 TO STA. 10+295
STA. 10+340 TO STA. 10+350

LEGENDS

(1) EXISTING CONCRETE CURB & GUTTER TO BE REMOVED

(2) EXISTING HMA SURFACE TO BE REMOVED, 50mm

(3) EXISTING PCC SLAB

(4) EXISTING AGGREGATE SHOULDER TY A

BIKE PATH

(5) HMA SURFACE COURSE, MIX "C", N 50, 50mm

(5A) SUB-BASE GRANULAR MATERIAL, 150 mm

COMB CC & G

(6) PROPOSED COMB CC & G TY. B-15.60. (TYP)

(6A) 190 mm ADDITIONAL SUB-BASE GRANULAR MATERIAL TY B COST INCL. IN CCC & G, NO ADDITIONAL COST

(7) PROPOSED PCC BASE COURSE, 330 mm

(8) PROPOSED HMA SURFACE COURSE MIX "F", N90, 50 mm

(9) PROPOSED SUB-BASE GRANULAR MATERIAL, TY B, 100 mm

✱✱✱ (9A) PROPOSED POROUS GRANULAR EMBANKMENT, SUBGRADE
STA. 10+285 TO STA. 10+295, PGES DEPTH 600 mm
STA. 10+340 TO STA. 10+350, PGES DEPTH 150 mm

(10) PROPOSED PCC PVT, 280 mm, JOINTED

(11) PROPOSED SUB-BASE GRANULAR MATERIAL, TY B, 300 mm

(12) PROPOSED SIDEWALK, 125 mm

(13) PROPOSED RETAINING WALL

HOT-MIX ASPHALT MIXTURE SELECTION TABLE-ROADWAY

MIX TYPE	AC TYPE	% AIR VOIDS
POLYMERIZED HOT-MIX ASPHALT SURFACE COURSE, MIX "F", N90 (IL-9.5 mm)	SBS/SBR PG 70-22	4% @ 90 Gyr

HOT-MIX ASPHALT MIXTURE SELECTION TABLE-BIKE PATH

MIX TYPE	AC TYPE	% AIR VOIDS
HOT-MIX ASPHALT SURFACE COURSE, MIX "C", N50 (IL-9.5 mm)	PG 64-22	4% @ 50 Gyr

NOTE: THE UNIT WEIGHT USED TO CALCULATE ALL HMA SURFACE MIXTURE IS 2.4 $Kg^2/m/mm$

✱ TO BE REMOVED WHERE HATCHED

✱✱ 1.8 m AND VARIES, WIDENING LIMIT

✱✱✱ FOR OTHER LOCATIONS SEE CROSS SECTIONS

REVISIONS	
NAME	DATE

ILLINOIS DEPARTMENT OF TRANSPORTATION

US 45/IL 21
OVER APTAKISIC CREEK
TYPICAL SECTION

DRAWN BY
DATE
CHECKED BY