F.A.P. RTE.	SECTION	COUNTY	TOTAL SHEETS	SHEET NO.
330	1Y-B-R-1	LAKE	121	60
STA.		TO STA.		
FED. ROAD DIST. NO.		ILLINOIS	FED. AID PROJECT	

CONTRACT NO. 62032

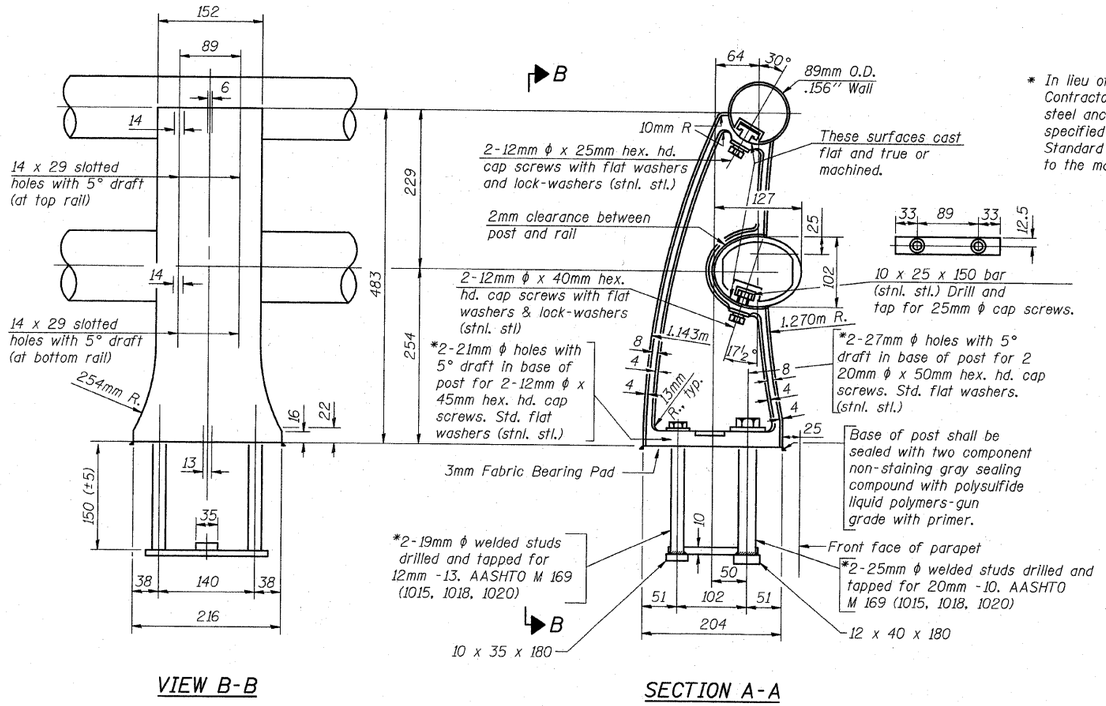

VIEW B-B

SECTION A-A

RAIL POST DETAILS

* In lieu of the cast-in-place anchor device shown, the Contractor has the option of drilling and setting stainless steel anchor rods of the same diameter and grade as the specified cap screws according to Article 509.06 of the Standard Specifications. Embedment shall be according to the manufacturer's specifications.

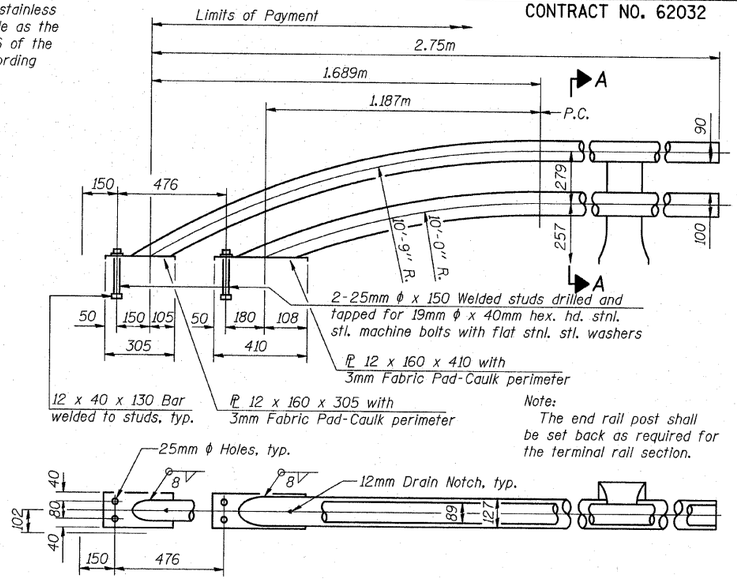

RAIL TERMINAL SECTION

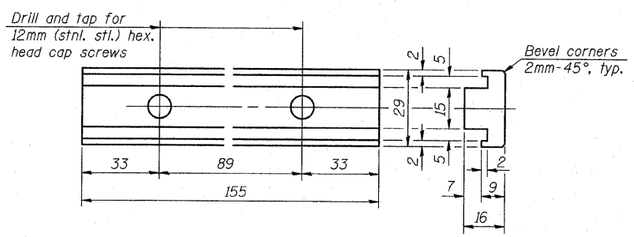

RAIL POST CLAMP BAR

For Top Rail

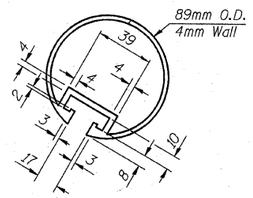

SECTION THRU TOP RAIL

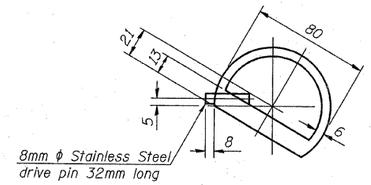

SECTION THRU SPLICE

For Top Rail

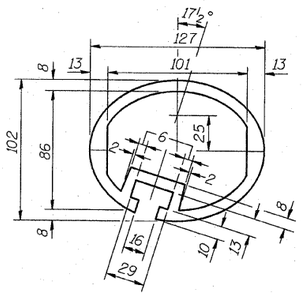

SEC. THRU ELLIPTICAL RAIL SECTION

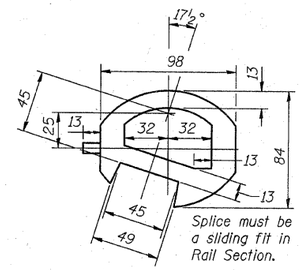

SEC. THRU SPLICE

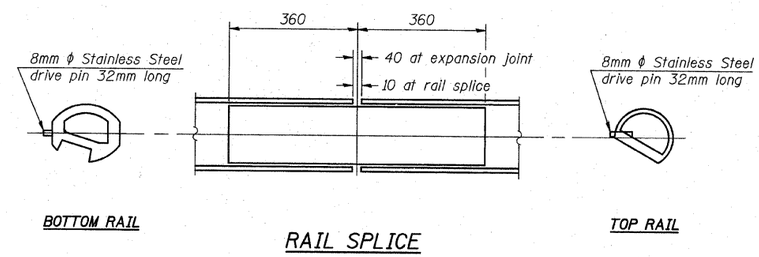

RAIL SPLICE

Notes:
All Posts shall be normal to parapet.
All joints in rail shall be spliced per detail.
Provide 1- 3mm and 2- 1.5mm Aluminum Shims for 25% of the Posts. Rail elements shall be parallel to Grade-high spots will be ground and low spots shimmed.
See sheet S10 for rail post spacing.

BILL OF MATERIAL

Item	Unit	Quantity
Aluminum Railing, Type L	m	17.982

REVISIONS	
NAME	DATE

ILLINOIS DEPARTMENT OF TRANSPORTATION

ALUMINUM RAILING, TYPE L
U.S. RTE. 45 / IL. RTE. 21
OVER
APTAKISIC CREEK
F.A.P. RTE. 330 SECTION: 1Y-B-R-1
LAKE COUNTY STATION 10+000.000
STRUCTURE NO. 049-0194

SCALE: NONE
DATE: OCTOBER 16, 2007
DRAWN BY: D.L./F.M.
CHECKED BY: B.N.S.

CHRISTIAN-ROGE & ASSOC., INC.
CHICAGO ILLINOIS

jobsite\Aluminum Railing.jnt 11/27/2007 10:56:55 AM