STATE OF ILLINOIS
DEPARTMENT OF TRANSPORTATION

ROUTE NO.	SECTION	COUNTY	TOTAL SHEETS	SHEET NO.
F.A.P. 308	*	ROCK ISLAND	210	135
FED. ROAD DIST. NO. 7		ILLINOIS	FED. AID PROJECT-	

SHEET NO. 20
32 SHEETS

Contract #64814 * 1(HB,HB-1,VB,HB-2)R

INTERIOR GIRDER MOMENT TABLE ***					
			0.4 Sp. 1 or 0.6 Sp. 3	Pier 1 or 2	0.5 Sp. 2
	I_s	(in^4)	9,750	13,416	9,750
	$I_c(n)$	(in^4)	21,873	-	21,783
	$I_c(3n)$	(in^4)	16,198	-	16,198
	S_s	(in^3)	542	725	542
	$S_c(n)$	(in^3)	730	-	730
	$S_c(3n)$	(in^3)	663	-	663
	Z	(in^3)	-	825	-
	w_D	(k/')	0.77	1.17	0.77
	M_D	('k)	240	742	246
	w_S	(k/')	0.40	-	0.40
	M_S	('k)	136	-	156
	M_L	('k)	429	311	478
	M_{Imp}	('k)	110	76	112
	$\frac{5}{3}[M_L + M_{Imp}]$	('k)	898	645	983
	M_a	('k)	1,656	1,803	1,801
*	M_u	('k)	2,833	2,450	2,833
	f_s w_D non-comp	(ksi)	5.3	12.3	5.4
	f_s w_D (comp)	(ksi)	2.5	-	2.8
	f_s $\frac{5}{3}[M_L + M_{Imp}]$	(ksi)	14.8	10.7	16.2
	f_s (Overload)	(ksi)	22.6	23.0	24.4
**	f_s (Total)	(ksi)	-	-	-
	VR	(k)	50.1	-	38.6

INTERIOR GIRDER REACTION TABLE***					
		S. Abut.	Pier 2	Pier 1	N. Abut.
R_D	(k)	29.8	103.0	103.0	29.8
R_L	(k)	36.0	44.2	44.2	36.0
Imp.	(k)	9.3	7.8	7.8	9.3
R_{Total}	(k)	75.1	155.0	155.0	75.1

* Compact section
** Braced non-compact and partially braced section
*** Beam 13 Shown (Worst-case interior beam)

I_s, S_s: Non-composite moment of inertia and section modulus of the steel section used for computing f_s (Total and Overload) due to non-composite dead loads ($in.^4$ and $in.^3$).

$I_c(n)$, $S_c(n)$: Composite moment of inertia and section modulus of the steel and deck based upon the modular ratio, "n", used for computing f_s (Total and Overload) due to short-term composite live loads ($in.^4$ and $in.^3$).

$I_c(3n)$, $S_c(3n)$: Composite moment of inertia and section modulus of the steel and deck based upon 3 times the modular ratio, "3n", used for computing f_s (Total and Overload) due to long-term composite (superimposed) dead loads ($in.^4$ and $in.^3$).

Z: Plastic Section Modulus of the steel section in non-composite areas ($in.^3$).

w_D: Un-factored non-composite dead load (kips/ft.).

M_D: Un-factored moment due to non-composite dead load (kip-ft.).

w_S: Un-factored long-term composite (superimposed) dead load (kips/ft.)

M_S: Un-factored moment due to long-term composite (superimposed) dead load (kip-ft.).

M_L: Un-factored live load moment (kip-ft.).

M_{Imp}: Un-factored moment due to impact (kip-ft.).

M_a: Factored design moment (kip-ft.).
$1.3\ [M_D + M_S + \frac{5}{3}(M_L + M_{Imp})]$

M_u: Compact composite moment capacity according to AASHTO LFD 10.50.1.1 or compact non-composite moment capacity according to AASHTO LFD 10.48.1 (kip-ft.).

f_s (Overload): Sum of stresses as computed from the moments below (ksi).
$M_D + M_S + \frac{5}{3}(M_L + M_{Imp})$

f_s (Total): Sum of stresses as computed from the moments below on non-compact section (ksi).
$1.3\ [M_D + M_S + \frac{5}{3}(M_L + M_{Imp})]$

VR: Maximum L + impact horizontal shear range within the composite portion of the span for stud shear connector design (kips).

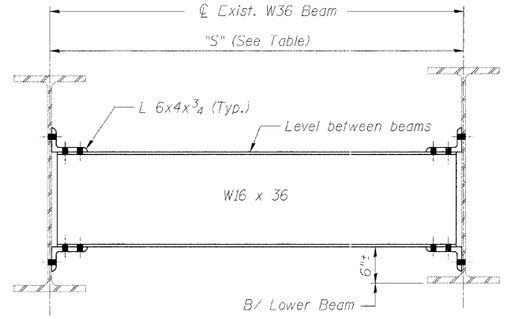

INTERIOR DIAPHRAGMS "D1", "D5", "D7", "D9", "D10", "D12" and "D13"

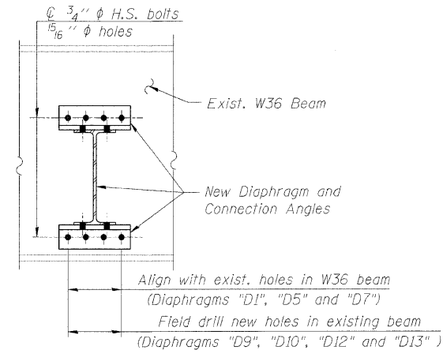

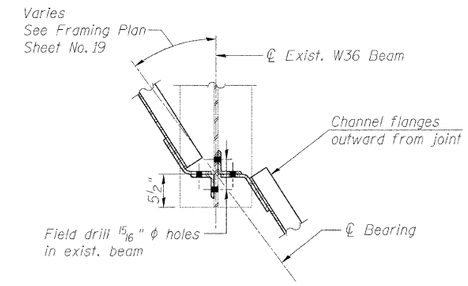

SECTION A-A

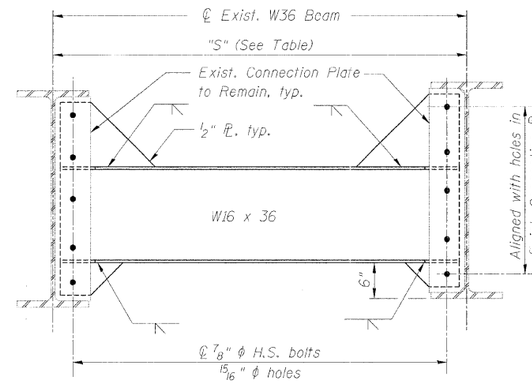

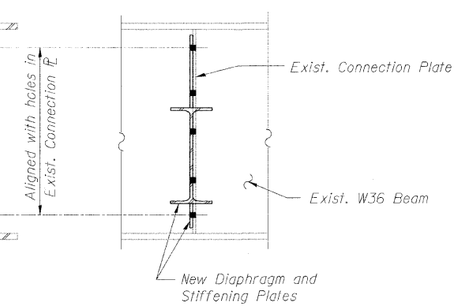

INTERIOR DIAPHRAGMS "D2" and "D4"

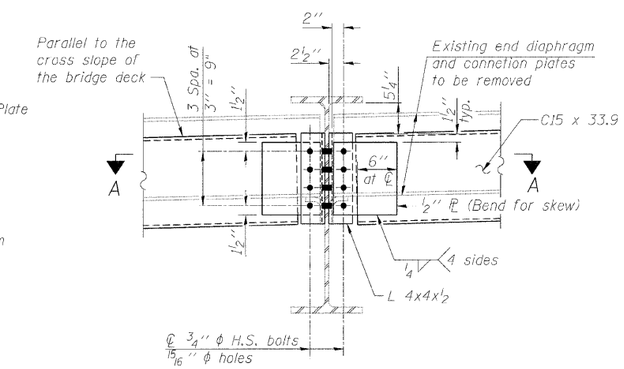

TYPICAL END DIAPHRAGM "D"
26 Required

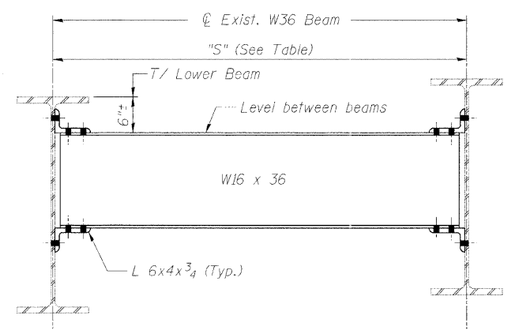

DIAPHRAGMS "D3", "D6", "D8", "D11" and "D14"

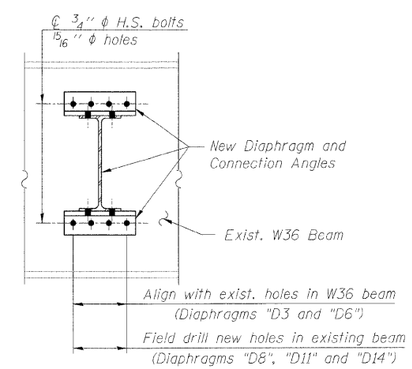

BEAM SPACING AT DIAPHRAGMS

Diaphragm	"S" Dimension
D1	5'-10 1/16"
D2	5'-11"
D3	5'-9 7/16"
D4	5'-8 7/8"
D5	5'-10½"
D6	5'-10½"
D7	5'-8 11/16"
D8	3'-1 3/8"
D9	3'-8 1/16"
D10	3'-1"
D11	2'-7⅝"
D12	2'-2 1/16"
D13	3'-3 9/16"
D14	3'-11 3/8"

NOTES

1. For Framing Plan and Beam Elevation, see Sheet No.19
2. Two hardened washers required for each set of oversized holes.

STEEL DETAILS
IL ROUTE 92 (CENTENNIAL EXPRESSWAY)
OVER IAIS RAILROAD
FAP ROUTE 308 SEC. 1(VB)R
ROCK ISLAND COUNTY
STATION 1507+04.10
STRUCTURE NO. 081-0064

DESIGNED	AMK
CHECKED	JSD
DRAWN	AMK
CHECKED	RWC

LOCHNER
H.W. LOCHNER, INC., CHICAGO, ILLINOIS

t:\2082\structdgn\Z0440029ST1.dgn