STATE OF ILLINOIS
DEPARTMENT OF TRANSPORTATION

EarthTech
A tyco International Ltd. Company

F.A.P. ROUTE NO.	SECTION	COUNTY	TOTAL SHEETS	SHEET NO.
786	109 BR	La Salle	351	222
FED. ROAD DIST. NO. 7	ILLINOIS	FED. AID PROJECT-		

SHEET NO. 22
89 SHEETS

Contract # 66607

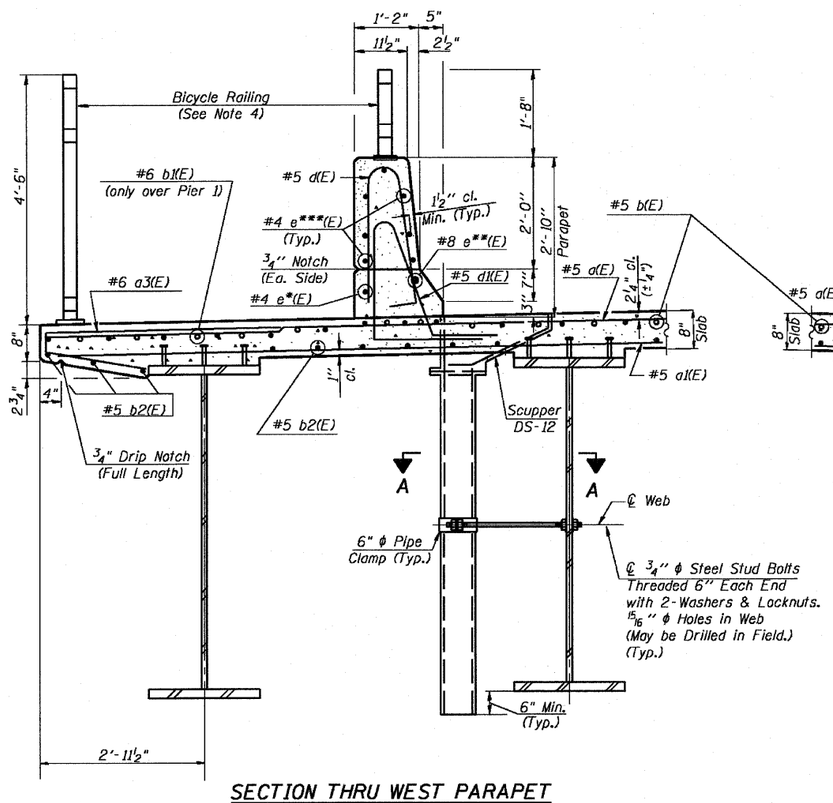

SECTION THRU WEST PARAPET
Looking North

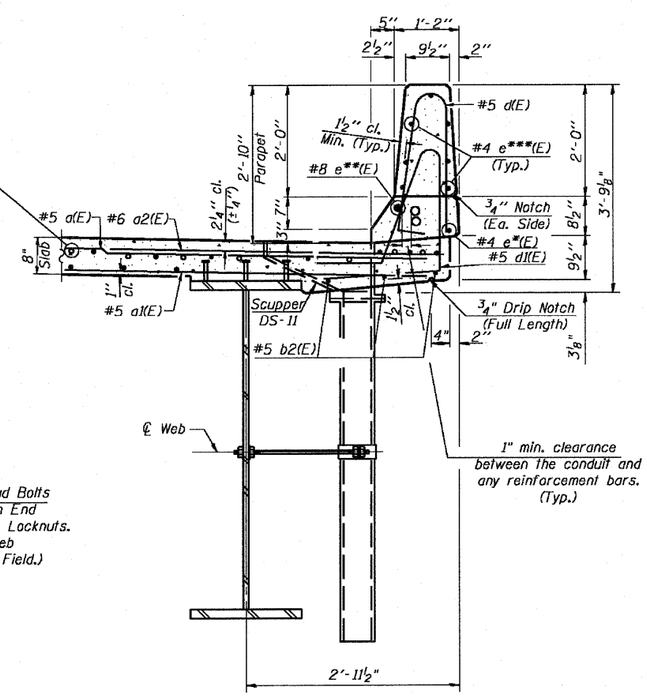

SECTION THRU EAST PARAPET
Looking North

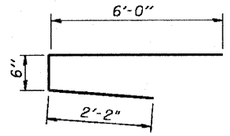

BARS a3(E)

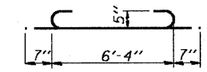

BAR a10 (E)

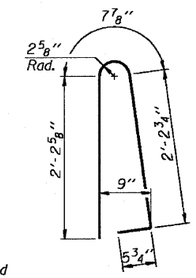

BAR d(E)

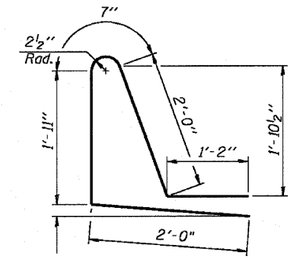

BAR d1(E)

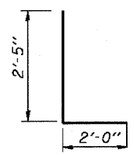

BAR d2(E)

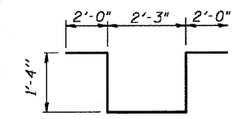

BAR d3(E)

SUPERSTRUCTURE BILL OF MATERIAL

Unit 1 (N. Abut. to Pier 2)

Bar	No.	Size	Length	Shape
a(E)	357	#5	38'-4"	
a1(E)	289	#5	37'-8"	
a2(E)	179	#6	6'-0"	
a3(E)	179	#6	8'-8"	
a4(E)	32	#5	2'-0"	
a10(E)	30	#5	7'-6"	
a11(E)	1	#5	32'-7"	
a12(E)	8	#6	38'-4"	
b(E)	287	#5	36'-3"	
b1(E)	117	#6	26'-9"	
b2(E)	288	#5	32'-0"	
d(E)	526	#5	5'-7"	
d1(E)	526	#5	7'-8"	
d2(E)	6	#6	4'-5"	
d3(E)	10	#6	8'-11"	
e(E)	144	#4	19'-8"	
e1(E)	4	#8	19'-8"	
e2(E)	12	#4	34'-5"	
e3(E)	12	#8	35'-10"	
e4(E)	14	#4	20'-6"	
e5(E)	14	#4	19'-4"	
x1(E)	30	#5	5'-11"	
x2(E)	30	#5	5'-11"	
Reinforcement Bars, Epoxy Coated			Pound	67,250
Concrete Superstructure			Cu. Yd.	305.1
Bridge Deck Grooving			Sq. Yd.	756
Protective Coat			Sq. Yd.	1,003

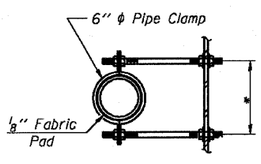

*Dimension as Required
by Pipe Clamp

SECTION A-A

#4 e*(E) = Bars #4 e(E) or #4 e2(E)
#8 e**(E) = Bars #8 e1(E) or #8 e3(E)
#4 e***(E) = Bars #4 e(E) or #4 e4(E) or #4 e5(E)

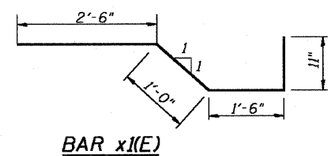

BAR x1(E)

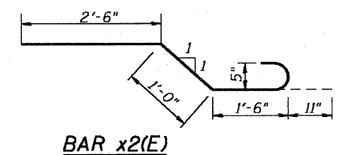

BAR x2(E)

Notes:

1. Work this sheet with Sheets 19, 20, & 21.
2. See Sheet 34 for Parapet Joint Details, Parapet Projection Details/Reinforcement, & Scupper Reinforcement Details.
3. See Sheets 35 & 36 for DS-11 & DS-12 Drainage Scupper Details, respectively.
4. See Sheet 37 for Bicycle Railing Details.
5. Bars indicated thus 20x3-#5 etc. indicates 20 lines of bars with 3 lengths per line.
6. Cut longitudinal reinforcement to clear drainage scuppers.

MINIMUM BAR LAPS

(Slab)
#5 bar = 2'-2"
#6 bar = 2'-7"
#7 bar = 3'-5"
(Parapet)
#4 bar = 1'-4"
#8 bar = 3'-5"

SUPERSTRUCTURE DETAILS
UNIT 1
IL. 170 F.A.P. 786 OVER
ILLINOIS RIVER AT SENECA
PUBLIC WATERS
LA SALLE COUNTY, SECTION 109 BR
STATION 79+04.42
STRUCTURE NO. 050-0246

DESIGNED	- CLS
CHECKED	- RJC
DRAWN	- JHR
CHECKED	- RJC