CONTRACT NO. 68110

F.A.P. RTE.	SECTION	COUNTY	TOTAL SHEETS	SHEET NO.
318	72-(6-1)RS	PEORIA	89	10
STA.		TO STA.		
FED. ROAD DIST. NO.	ILLINOIS	FED. AID PROJECT		

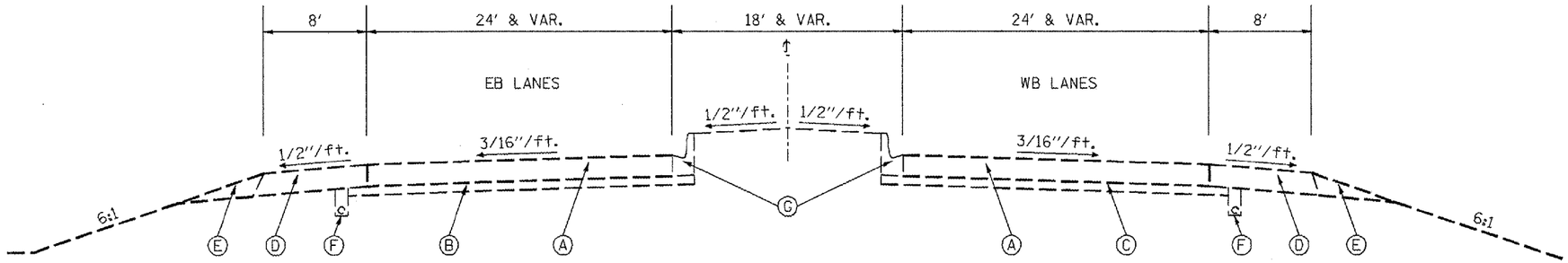

IL 6 (IL 29 SPUR) TANGENT SECTION
STA. 0+32.00 TO 4+07.36

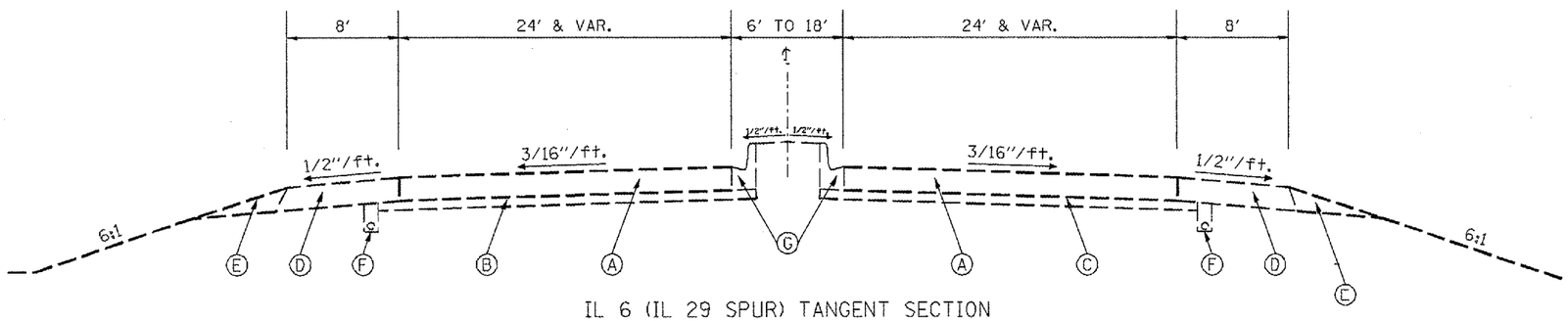

IL 6 (IL 29 SPUR) TANGENT SECTION
STA. 4+07.36 TO 4+68.82

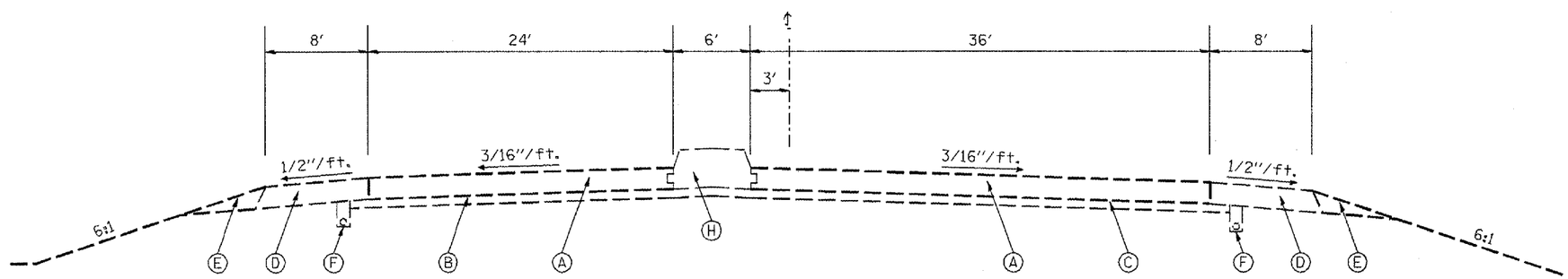

IL 6 (IL 29 SPUR) TANGENT SECTION
STA. 4+68.82 TO 5+31.17

Ⓐ 10" CONT. REINF. PCC PAVEMENT - (TO BE REMOVED)
Ⓑ 8" STABILIZED SUB-BASE (BAM) - (TO BE REMOVED)
Ⓒ 5" STABILIZED SUB-BASE (CAM) - (TO BE REMOVED)
Ⓓ 10" STABILIZED SHOULDERS (BAM) - (TO BE REMOVED)
Ⓔ AGGREGATE SHOULDER TYPE B
Ⓕ 4" PIPE UNDERDRAIN - (TO BE REMOVED)
Ⓖ CCC&G, TYPE B-6.12 - (TO BE REMOVED)
Ⓗ CONCRETE MEDIAN TYPE S.B.-6.12 - (TO BE REMOVED)

REVISIONS	
NAME	DATE

ILLINOIS DEPARTMENT OF TRANSPORTATION

EXISTING PAVEMENT
IL 6

SCALE: VERT. HORIZ.
DATE
DRAWN BY
CHECKED BY

PLOT DATE = 12/17/2007
FILE NAME = S:\DEN\DRAFT\STD&PLNS\SQUADR-NEW\Active Contracts\68110\Cover sheet & SOG.dgn
PLOT SCALE = 105.9897 ' / IN.
USER NAME = bruceban