ROUTE NO.	SECTION	COUNTY	TOTAL SHEETS	SHEET NO.
FAI 74	(57-22) BR-3	McLEAN	42	33
FED. ROAD DIST. NO. 7	ILLINOIS	FED. AID PROJECT-		

SHEET NO. 22
24 SHEETS

Contract #70672

STATE OF ILLINOIS
DEPARTMENT OF TRANSPORTATION

Notes:
- Space reinforcement in cap to miss anchor bolts.
- See sheet 24 of 24 for bar splicer details.

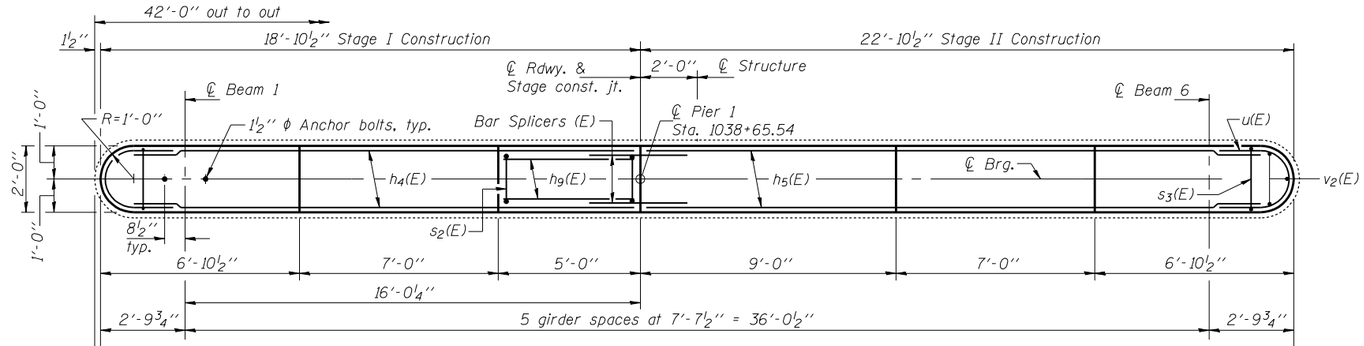

TOP PLAN

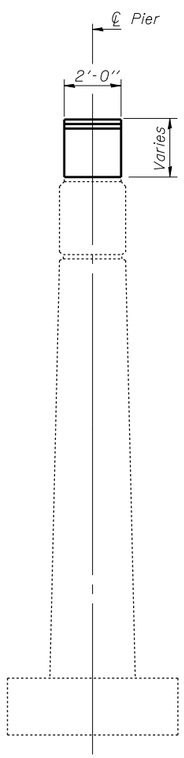

END VIEW

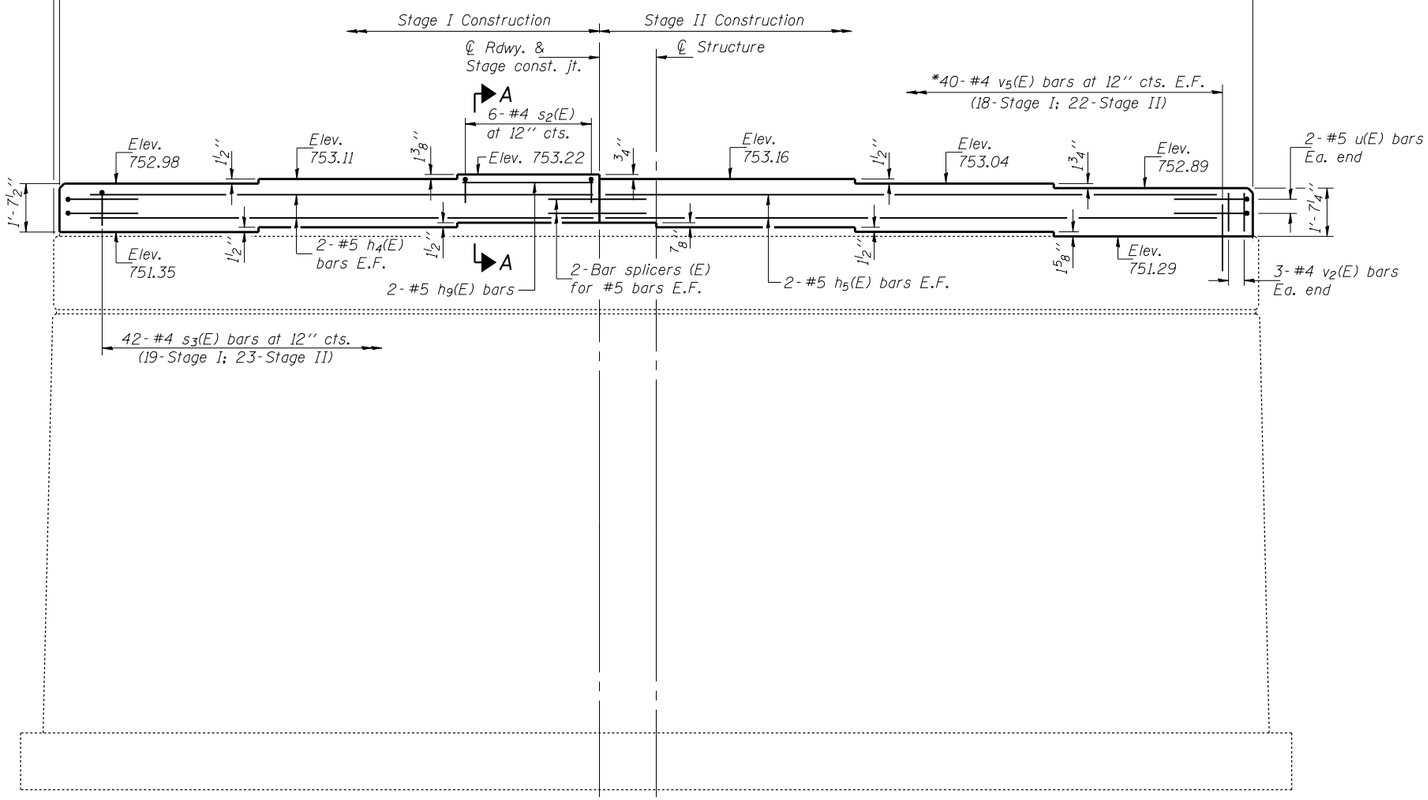

ELEVATION
(Looking East)

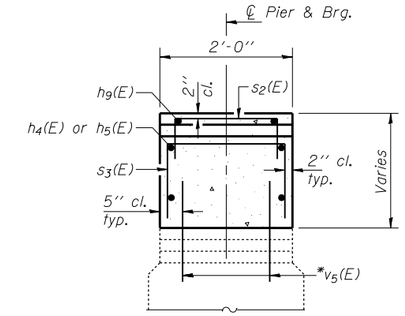

SECTION A-A

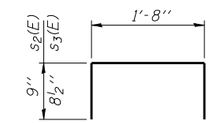

BARS s2(E) & s3(E)

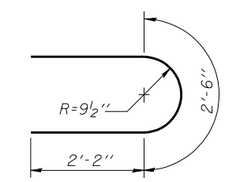

BAR u(E)

BILL OF MATERIAL

Bar	No.	Size	Length	Shape
h4(E)	4	#5	17'-11"	
h5(E)	4	#5	21'-11"	
h9(E)	2	#5	4'-8"	
s2(E)	6	#4	3'-2"	
s3(E)	42	#4	3'-1"	
u(E)	4	#5	6'-10"	
v2(E)	6	#4	1'-3"	
v5(E)	80	#4	1'-10"	
Concrete Structures			Cu. Yd.	5.0
Reinforcement Bars, Epoxy Coated			Pound	410

*Epoxy grout #4 v5(E) bars in 9" min. drilled holes according to Section 584 of the Std. Spec's.

MIN. BAR LAP
#5 bars = 2'-2"

DESIGNED	DPN
CHECKED	SMR
DRAWN	h.t. duong
CHECKED	DPN/SMR

Jan. 31, 2008
EXAMINED Thomas J. Domagalski
ENGINEER OF BRIDGE DESIGN
PASSED Ralph E. Anderson
ENGINEER OF BRIDGES AND STRUCTURES

PIER 1
F.A.I. RT. 74 - SEC. (57-22)BR-3
McLEAN COUNTY
STATION 1039+00
STRUCTURE NO. 057-0125 (E.B.)