CONTRACT NO. 72624

F.A.P. RTE.	SECTION	COUNTY	TOTAL SHEETS	SHEET NO.
753	143RS-6	CHRISTIAN	127	69
STA.		TO STA.		
FED. ROAD DIST. NO.	ILLINOIS	FED. AID PROJECT		

SEE SHEET 2 OF 2 FOR CONCRETE HEADWALL REMOVAL SPECIAL

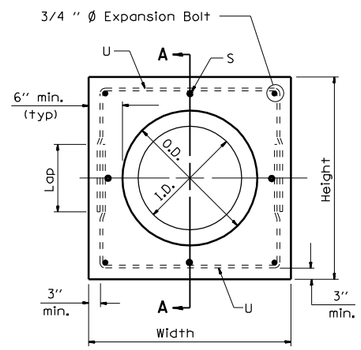

PIPE CULVERT EXTENSION COLLAR

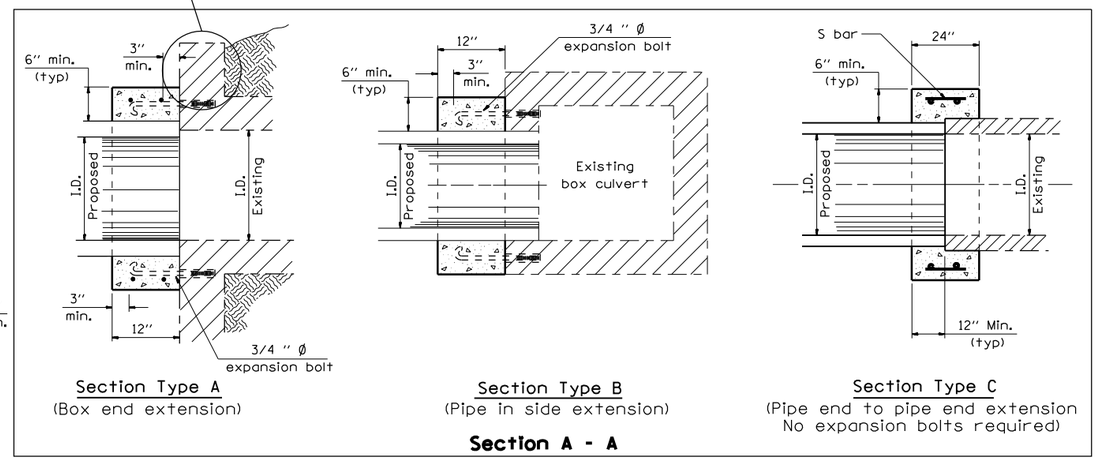

Section Type A
(Box end extension)

Section Type B
(Pipe in side extension)

Section Type C
(Pipe end to pipe end extension
No expansion bolts required)

Section A - A

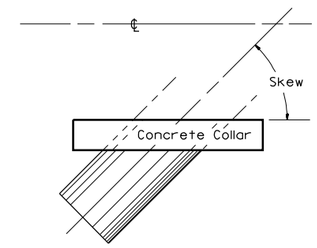

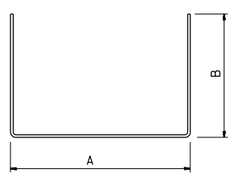

#4 U - bar

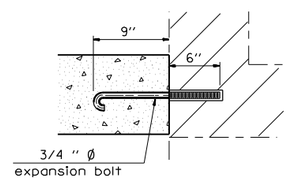

Expansion Bolt Detail

Notes:

1. Expansion bolts shall consist of self drilling expansion shields and ¾" Ø hooked bolts. Hooked bolts shall extend a minimum of 9" into new concrete. Minimum Certified Proof Load - 4,080 lbs.

2. Use minimum of 1 (one) expansion bolt at each corner.

BOX CULVERT POURED IN PLACE EXTENSION

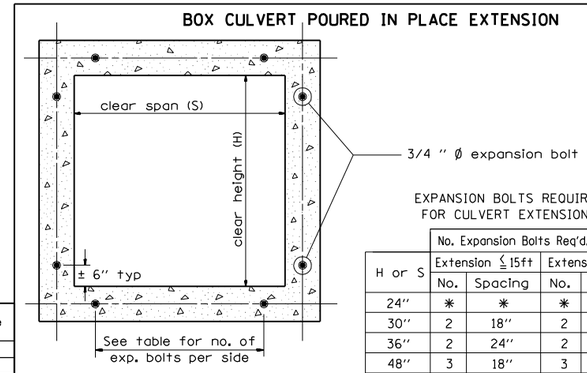

Section Thru Barrel

EXPANSION BOLTS REQUIRED
FOR CULVERT EXTENSIONS

H or S	No. Expansion Bolts Req'd. Per Side			
	Extension ≦ 15ft		Extension > 15ft	
	No.	Spacing	No.	Spacing
24"	*	*	*	*
30"	2	18"	2	18"
36"	2	24"	2	24"
48"	3	18"	3	18"
60"	4	16"	3	24"
72"	5	15"	4	20"
84"	5	18"	4	24"
96"	6	17"	5	21"
108"	6	19"	5	24"
120"	7	18"	6	21"
132"	8	17"	6	24"
144"	8	19"	7	22"

Note: Number of expansion bolts in table based on non-skewed culverts.

* Use minimum 1 (one) expansion bolt in each corner.

Station	Section Type	Skew	Existing Culvert	Proposed Culvert		Collar		Reinforcement Bars									Expansion Bolts 3/4 "	Class SI Concrete Collar
								S bar			U bar							
			Size	I.D.	O.D.	Height	Width	No.	Size	Length	No.	Size	A	B	Lap	Length	lb	Each	yd3
103+70 RT	A	0	3' x 3'	42"	51"	63"	63"				4	0.5"	57"	38"	19"	95"	10.6	8	0.5
103+70 LT	A	0	3' x 3'	42"	51"	63"	63"				4	0.5"	57"	38"	19"	95"	10.5	8	0.5
														Total			21.2	16	1.0

SHEET 1 OF 2

REVISIONS	
NAME	DATE

ILLINOIS DEPARTMENT OF TRANSPORTATION

CONCRETE COLLAR AND
CULVERT EXTENSION DETAILS

SCALE: VERT.
HORIZ.
DATE: OCTOBER 6, 1999

DRAWN BY CADD
CHECKED BY RLD

PLOT DATE = Dec-12-2007 10:36:04AM
FILE NAME = c:\projects\ed53580\sheetdetails.dgn
PLOT SCALE = 42.3529 ' / IN.
USER NAME = langtuwr

COLLAR