Contract No. 72624
SHEET 15 OF 26

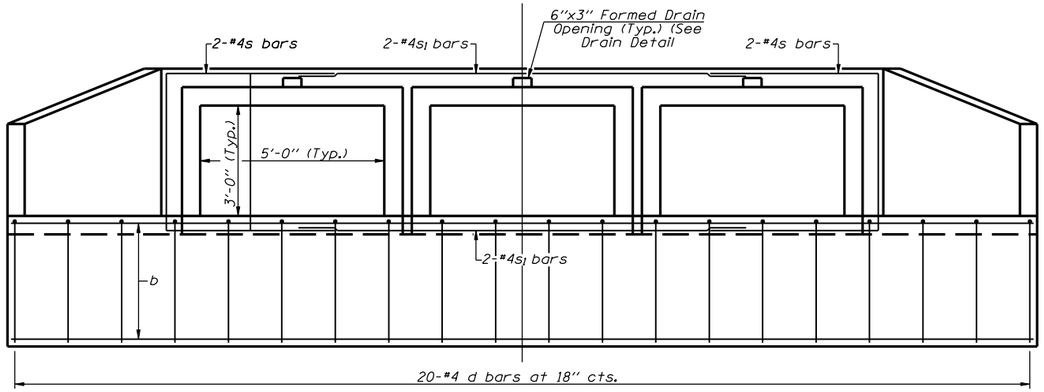

END ELEVATION

* Cut or bend to fit

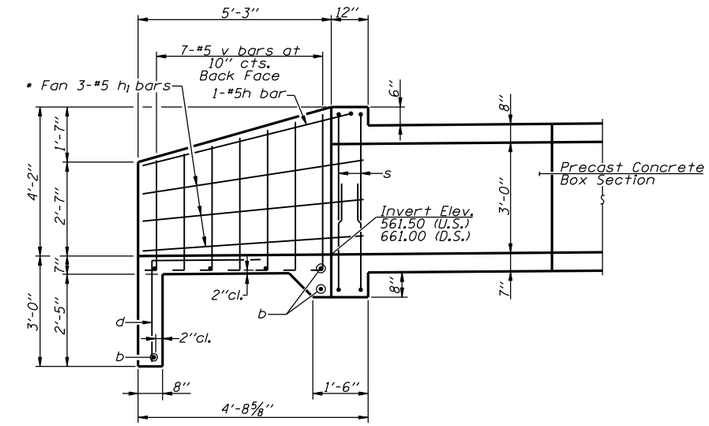

HALF SIDE ELEVATION

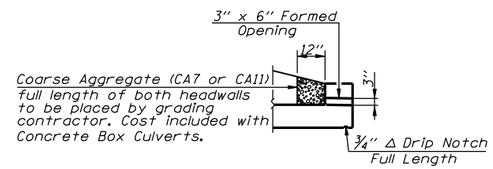

DRAIN DETAIL

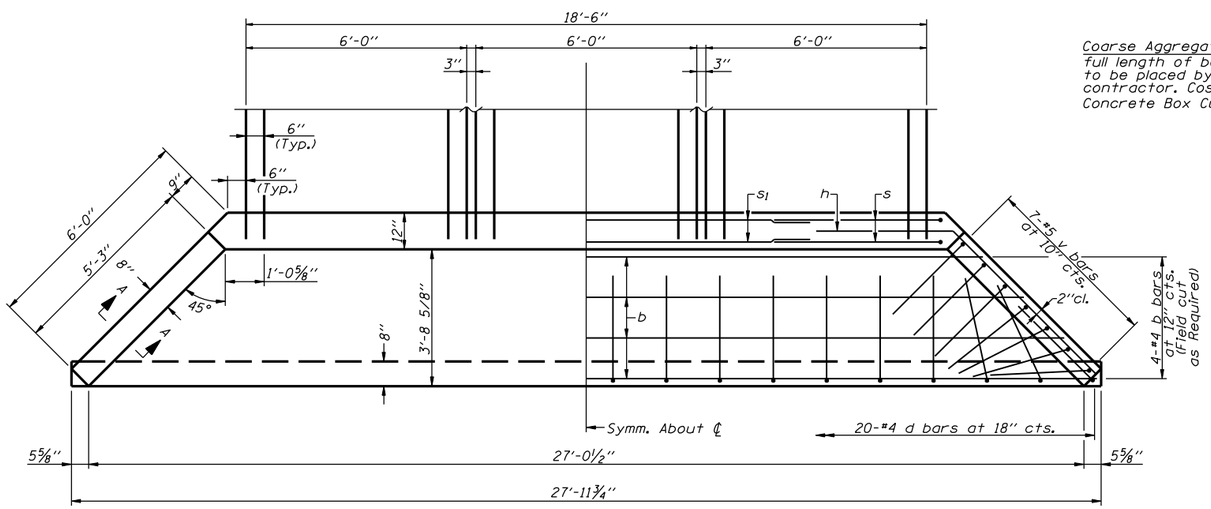

END PLAN

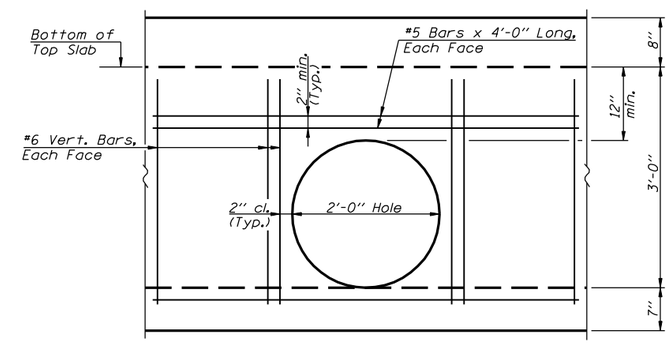

DETAIL A
(See Sheet 1 of 6 for locations)

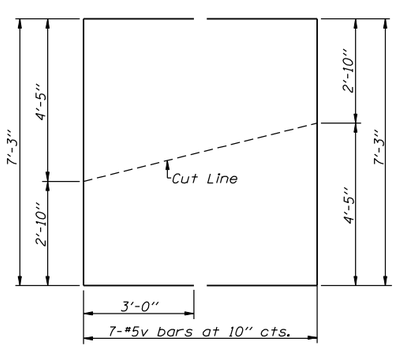

BAR v CUT DIAGRAM

Note: Order bars full length. Lay out in field as shown. Cut along cut line. Use remainder of v in opposite wing wall.

MIN. BAR LAP
#4 - 1'-8"

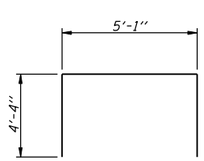

BAR s

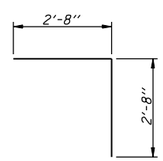

BAR d

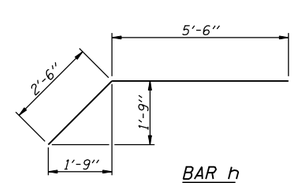

BAR h

BILL OF MATERIAL
TWO END SECTIONS

Bar	No.	Size	Length	Shape
b	12	#4	27'-7"	
d	40	#4	5'-4"	
h	4	#5	8'-0"	
h1	12	#5	5'-8"	
s	8	#4	13'-9"	
s1	8	#4	14'-3"	
v	14	#4	13'-3"	
Concrete Box Culverts			Cu. Yd.	11.2
Reinforcement Bars			Pound	740

CULVERT DETAILS
IL ROUTE 104 OVER UNNAMED TRIBUTARY
SOUTH FORK SANGAMON RIVER
F.A.P. ROUTE 753 - SECTION 143RS-6
CHRISTIAN COUNTY
STA. 150+00.00
S.N. 011-7056