ROUTE NO.	SECTION	COUNTY	TOTAL SHEETS	SHEET NO.
FAP 328	(10BR-2)B-1	WAYNE		116
FED. ROAD DIST. NO. 7	ILLINOIS	FED. AID PROJECT-		

SHEET NO. 17
21 SHEETS

Contract # 74040

STATE OF ILLINOIS
DEPARTMENT OF TRANSPORTATION

Notes:

1. Space reinforcement in cap to miss anchor bolts.
2. Pour steps monolithically with cap.
3. For details of piles, see sheet 18 of 21.

PILE DATA

	Pier 1 & 2
Type:	HP12x53
Nominal Required Bearing:	419 kip
Allowable Resistance Available:	115 kip
Est. Length:	72'-0"
No. Production Piles:	7
No. Test Piles:	1

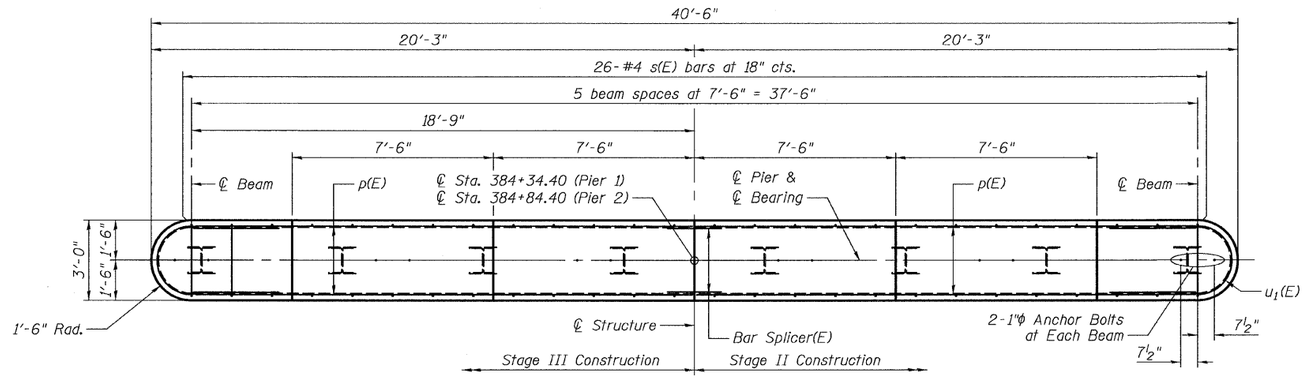

PLAN

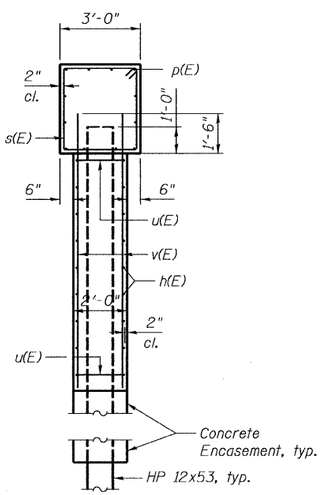

END VIEW

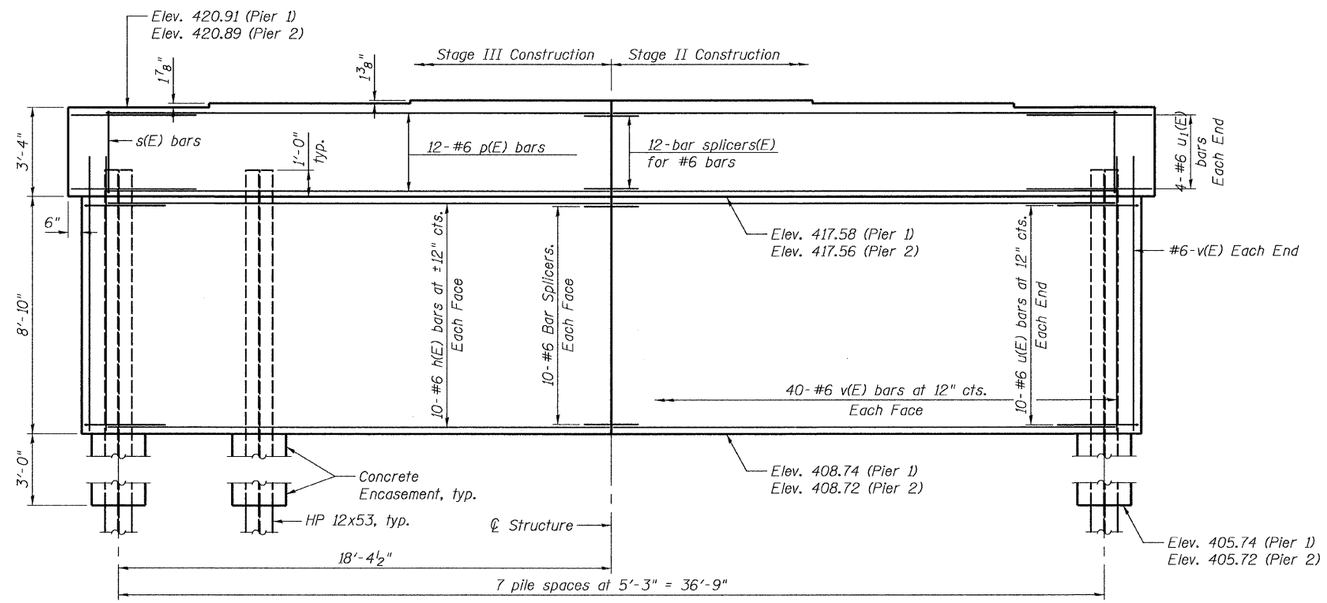

ELEVATION

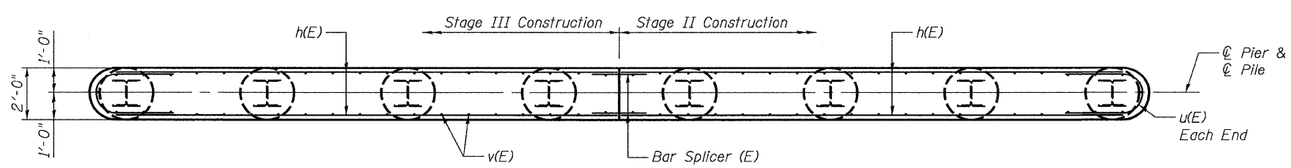

SECTION THRU STEM

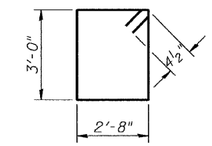

BAR s(E)

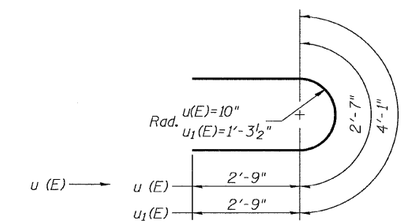

BARS u (E) & u1(E)

BILL OF MATERIAL

Bar	No.	Size	Length	Shape
h(E)	80	#6	18'-9"	
p(E)	48	#6	18'-9"	
s(E)	52	#4	12'-1"	
u(E)	40	#6	8'-1"	
u1(E)	16	#6	9'-7"	
v(E)	164	#6	10'-6"	
Structure Excavation			Cu. Yd.	112
Concrete Structures			Cu. Yd.	82.1
Reinforcement Bars, Epoxy Coated			Pound	7330
Furnishing Steel Piles, HP 12x53			Foot	1008
Driving Piles			Foot	1008
Test Pile Steel HP 12x53			Each	2
Pile Shoes			Each	16
Concrete Encasement			Cu. Yd.	5.6

BENTON & ASSOCIATES, INC.

DESIGNED	MBH
CHECKED	NRF
DRAWN	MBH
CHECKED	NRF

PIER 1 & 2
US 45 / DEER CREEK
F.A.P. RT. 328
WAYNE COUNTY
SN. 096-0068